Driving the world

SEW EURODRIVE

DRN.. gearmotors (IE3)



Catalog
33346747/EN

Edition 02/2026

Table of contents

1 Life Cycle Services 14

2 The gearmotors 16

2.1 Helical gearmotors 17

2.2 Parallel-shaft helical gearmotors 18

2.3 Helical-bevel gearmotors 19

2.4 Helical-worm gearmotors 20

2.5 SPIROPLAN® right-angle gearmotors 21

2.6 Product characteristics 22
- 2.6.1 Operating conditions 22
- 2.6.2 Properties of the gearmotors 27
- 2.6.3 Special features 32

2.7 Further details on the gearmotors 38
- 2.7.1 Lubricants 38
- 2.7.2 Gear unit venting 54
- 2.7.3 Oil expansion tank 54
- 2.7.4 Note on weight information 55
- 2.7.5 Extended storage 55
- 2.7.6 Gear unit mounting 56
- 2.7.7 Torque arms 57
- 2.7.8 Gear units with hollow shafts 59
- 2.7.9 Notes on stainless shrink disk or output shaft 75
- 2.7.10 Flange contours 76
- 2.7.11 Optional output shafts 84
- 2.7.12 Safety covers 96
- 2.7.13 Technical data of condition monitoring 103
- 2.7.14 Pt1000 temperature sensor 106
- 2.7.15 Agitator designs 108
- 2.7.16 Sealing systems 109
- 2.7.17 Adapters for mounting IEC and NEMA motors 112

2.8 Type designation 120

2.9 Nameplate and product label 121
- 2.9.1 Nameplate 121
- 2.9.2 Product label 122

2.10 Design types 123
- 2.10.1 Helical gearmotors 123
- 2.10.2 Parallel-shaft helical gearmotors 124
- 2.10.3 Helical-bevel gearmotors, gear unit sizes K..19 and K..29 126
- 2.10.4 Helical-bevel gearmotors, gear unit sizes K..39 and K..49 128
- 2.10.5 Helical-bevel gearmotors, gear unit sizes K..7 129
- 2.10.6 Helical-worm gearmotors 131
- 2.10.7 SPIROPLAN® right-angle gearmotors, gear unit sizes W..10, W..20, W..30 132

2.10.8 SPIROPLAN® right-angle gearmotors, gear unit size W..9 133
2.10.9 SPIROPLAN® right-angle gearmotors, gear unit size W..9HG 134
2.10.10 Designs and options of the gear units 135
2.10.11 Versions and options for the DRN.. motor series 138

2.11 Order information 148
2.11.1 Information on the mounting positions 148
2.11.2 Position of the output shaft and the output flange 148
2.11.3 Output direction of rotation with backstop 149
2.11.4 Position of the output end in right-angle gear units 150
2.11.5 Position of motor terminal box and cable entry 151
2.11.6 Position motor terminal box and foot for gearmotors with motor option /FM 152
2.11.7 Sample orders 153

3 Mounting positions of gearmotors 154

3.1 General mounting position information for R.., F.., K.., S.., W.. gear units 154
3.1.1 Change of mounting position 155
3.1.2 Gear units in pivoted mounting position (dynamic) 155
3.1.3 Gear unit in pivoted mounting position (stationary) 155
3.1.4 Universal mounting position M0 155
3.1.5 Mounting position MX 155
3.1.6 Variable mounting position 156

3.2 Mounting position designation of motors 157
3.2.1 Mounting positions of AC motors according to IEC 60034-7 157
3.2.2 Position of motor terminal box and cable entry 157

3.3 Position of breather valve/oil drain plug in motor flange 159
3.3.1 Dimension tables 160

3.4 Mounting position sheets 163
3.4.1 Dimension sheet information 163
3.4.2 Mounting positions of helical gear units 164
3.4.3 Mounting positions of parallel-shaft helical gear units 169
3.4.4 Mounting positions of helical-bevel gear units 172
3.4.5 Mounting positions of helical-worm gear units 185
3.4.6 Mounting positions SPIROPLAN® right-angle gear units 191

4 Selection tables and dimension sheets 196

4.1 Important information on selection tables and dimension drawings 196
4.1.1 Possible geometrical combinations 196
4.1.2 Selection tables for gearmotors 197
4.1.3 Symbols for scope of delivery 198
4.1.4 Tolerances 199
4.1.5 Eyebolts, lifting eyes 200
4.1.6 Breather valves 201
4.1.7 Shrink disk connection 201
4.1.8 Splined hollow shaft 201
4.1.9 Rubber buffer for FA/FH/FV/FT 201
4.1.10 Position of the torque arm 202
4.1.11 Gearmotor dimension drawings 203

4.2 R..DRN.. helical gearmotors 204

4.2.1 Geometrically possible combinations R..DRN.. 204
4.2.2 Selection tables R..DRN.. in kW 240
4.2.3 Selection tables for low output speeds R..R..DRN.. in Nm 329
4.2.4 Dimension sheets R..DRN.. 348
4.2.5 Dimension sheets R..R..DRN.. 399

4.3 F..DRN.. parallel-shaft helical gearmotors 400
4.3.1 Geometrically possible combinations F..DRN.. 400
4.3.2 Selection tables F..DRN.. in kW 426
4.3.3 Selection tables for low output speeds F..R..DRN.. in Nm 471
4.3.4 Dimension sheets F..DRN.. 490
4.3.5 Dimension sheets F..R..DRN.. 562

4.4 K..DRN.. helical-bevel gearmotors 563
4.4.1 Geometrically possible combinations K..DRN.. 563
4.4.2 Selection tables K..DRN.. in kW 588
4.4.3 Selection tables for low output speeds K..R..DRN.. in Nm 652
4.4.4 Dimension sheets K..DRN.. 669
4.4.5 Dimension sheets K..R..DRN.. 763

4.5 S..DRN.. helical-worm gearmotors 764
4.5.1 Geometrically possible combinations S..DRN.. 764
4.5.2 Selection tables S..DRN.. in kW 791
4.5.3 Selection tables for low output speeds S..R..DRN.. in Nm 844
4.5.4 Dimension sheets S..DRN.. 862
4.5.5 Dimension sheets S..R..DRN.. 896
4.5.6 Technical data S..37 – 97 897
4.5.7 Technical data S..37p – 97p 924

4.6 W..DRN.. SPIROPLAN® right-angle gearmotors 953
4.6.1 Geometrically possible combinations W..DRN.. 953
4.6.2 Selection tables W..DRN.. in kW 965
4.6.3 Selection tables for low output speeds W..R..DRN.. in Nm 994
4.6.4 Dimension sheets W..DRN.. 999
4.6.5 Dimension sheets W..R..DRN.. 1041

5 Configuration 1042

5.1 Additional documentation on project planning 1042

5.2 General information on project planning 1042
5.2.1 Drive and gear unit selection data 1042
5.2.2 Service factor 1044
5.2.3 Efficiency of gear units 1049
5.2.4 Churning losses and thermal rating 1051
5.2.5 Inverter operation 1052

5.3 Configuration procedure 1052
5.3.1 Procedure for configuring non-controlled drives 1052
5.3.2 Procedure for configuring controlled drives 1054

5.4 Multi-stage gearmotors 1056
5.4.1 General information 1056
5.4.2 Limiting the motor power 1056
5.4.3 Checking brake torques 1056
5.4.4 Preventing blocking 1057

5.4.5 Position of the oil level plug of compound gear units 1057

5.5 Overhung and axial loads of R.., F.., K.., S.., W.. gear units 1058
5.5.1 Determining the overhung load 1058
5.5.2 Permitted overhung load F_{Ra} 1058
5.5.3 Higher permitted overhung loads 1059
5.5.4 Definition of the force application 1060
5.5.5 Permitted axial forces 1060
5.5.6 Input side: Overhung load conversion for off-center force application 1060
5.5.7 Output side: Overhung load conversion for off-center force application 1061

5.6 Dimensional deviations F..87../F..97.. 1064
5.6.1 Gear unit dimensions with reinforced bearings 1064

5.7 Gear unit dimensions in reduced-backlash designs 1066

6 Appendix 1067

6.1 Technical data of the motors 1067
6.1.1 Key to the data tables 1067
6.1.2 IE3 DRN.. motors, 400 V, 50 Hz, 2-pole, duty type S1 1068
6.1.3 IE3 DRN.. motors, 400 V, 50 Hz, 4-pole, duty type S1 1070
6.1.4 IE3 DRN.. motors, 400 V, 50 Hz, 6-pole, duty type S1 1074
6.1.5 IE3 DRN.. motors, 400 V, 50 Hz, 8-pole, duty type S1 1076

6.2 Abbreviations and descriptions 1078

6.3 Notes 1081
6.3.1 Product names and trademarks 1081
6.3.2 Copyright notice 1081
6.3.3 Decimal separator in numerical values 1081
6.3.4 Recycling, reprocessing, reuse 1081
6.3.5 General Terms and Conditions (T&Cs) 1081

7 Contacting SEW-EURODRIVE 1083

What do we stand for?

For a reliable partnership!

Humanity and partnership, solutions and services, responsibility and quality, tradition and innovation: SEW-EURODRIVE, the owner-managed family business, has stood for all this and much more for more than 90 years.

As a market leader in drive and automation technology, we don't just power countless applications in virtually every industry. With over 22000 employees, we're also playing a key role in shaping the future of drive technology. For you. Ensuring you, your systems and machines are always at the cutting edge. Not just now, but in the future as well. We want you to succeed together with us.





Where can you find us?

We are always nearby!

Our 17 production plants and 92 Drive Technology Centers in 57 countries mean we are at your service on every continent and in every corner of the world, always working with you as an equal partner and ensuring everything runs smoothly.

What makes us truly stand out from other manufacturers? With our broad customer support and service network worldwide, you never have to wait long for spare parts, repairs or professional advice.

What do we offer?

State-of-the-art drive technology and automation solutions from a single source!

Looking to modernize your processes or you construct a new system? We offer you one of the most extensive ranges of drive technology products, solutions, and services on the market.

One contact person for everything – that sounds good, doesn't it?

Our products stand for variety, quality, reliability, and innovative strength. These characteristics are at the heart of our entire product range. As one of the leading producers for drive and automation technology worldwide, we offer them to you. Take us at our word, and choose the perfect drive solution from our modular system.



From the very outset, our customers have been able to rely on our high quality, committed advice and support, and fast delivery times. We offer a portfolio of modular solutions that are comprehensive and unique and meet every possible need:

- Perfect combination options and solutions for every application
- Energy efficiency up to IE5
- Quick and easy selection process and project planning
- Comprehensive portfolio – from drives and motors for continuous operation to high-precision servo drives
- Special designs in stainless steel, with explosion protection, or for electrified monorail systems
- Ideal solutions for every application
- Complete automation solutions for your machine or factory and many other areas

The SEW-EURODRIVE modular system

Complete drive solutions for factory and machine automation

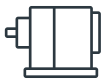

Gear units



Gearmotors



Motors



Industrial gear units



Decentralized drives/ mechatronics



Inverter technology



Servo drive technology

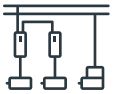

Industrial communication



Control technology



Software



Safety technology



Energy transfer/power supply



Mobile systems



Life Cycle Services

What are the goals we want to reach with you?

We want to take you to the top!

Nothing excites us more than the future of production. We are already using Industry 4.0 principles to transform our manufacturing operations. As far as we are concerned, Industry 4.0 ceased to be a distant vision long ago – it is already a successful reality thanks to our smart factory. As a result, we have become one of the world's pioneers in this field.

Yet we do not just focus on increasing our performance to ever greater levels. We also pass on to you the expertise, experience and technical solutions we have gathered in implementing Industry 4.0 in our production halls. Why not find out more?

No matter how large or small your project may be, no matter how high or complex your requirements may be: We rise to the challenge, working with you to develop the perfect solution for you – including an all-round service package throughout your entire system life cycle on request.

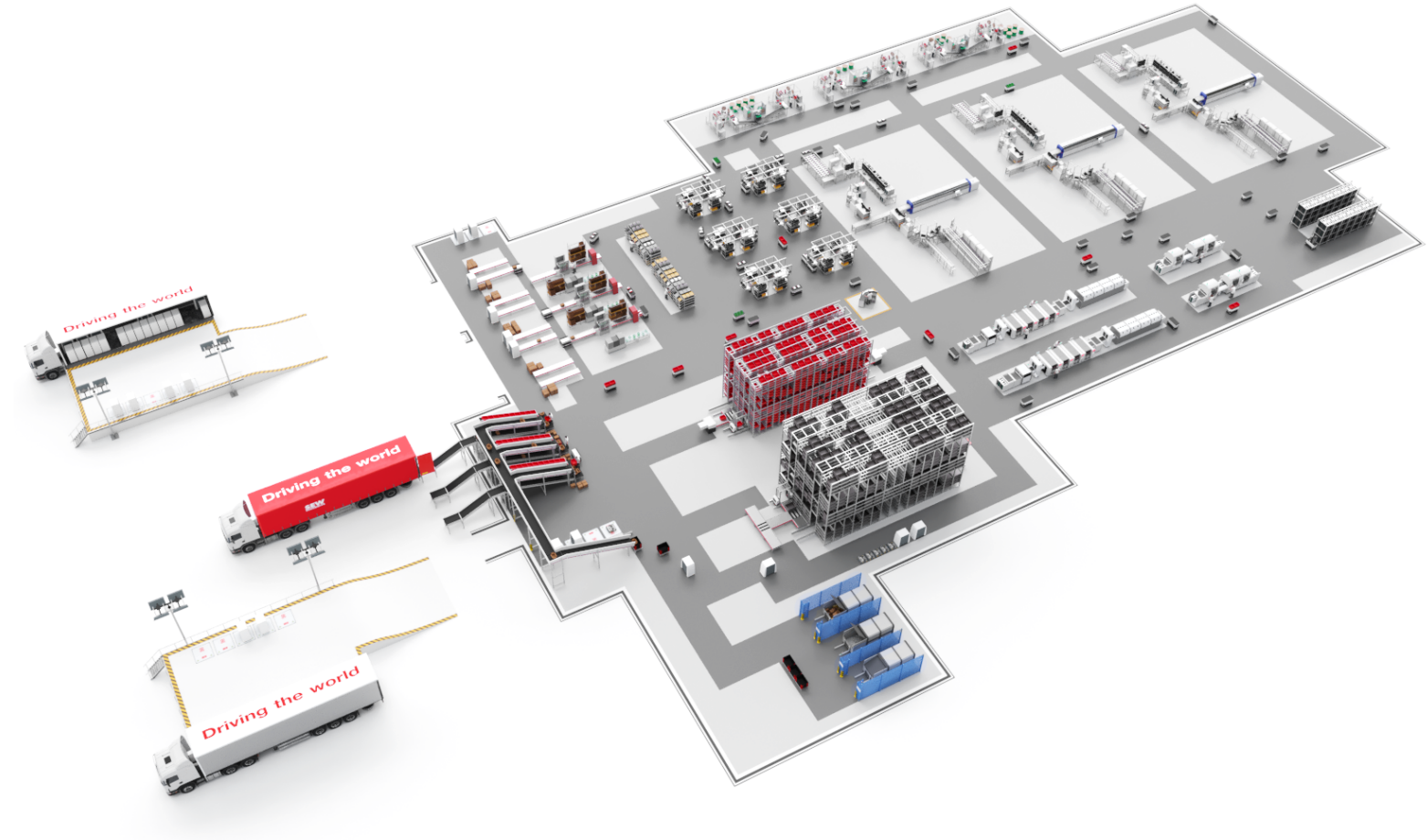

Predictive maintenance is one of the currently trending service topics. Early diagnosis and end-to-end condition monitoring have been an essential part of our offering for many years. The only thing that counts is your satisfaction and driving forward your processes – from planning and the operation phase all the way to modernization. Where necessary, we also take care of drives from other manufacturers.



Why SEW-EURODRIVE is the right choice for you?

Because these ten reasons speak for themselves.



You will be more flexible

However much the requirements for your processes and production systems increase, we're there for you every step of the way. With rapid conversions, short delivery times, enhanced capacity and faster format changeovers, we're at your side – from evaluating your needs and implementing an appropriate solution all the way to Life Cycle Services.



You will be more satisfied

Our name stands for the best quality. But we do not rest on our laurels. Quite the contrary, in fact. To ensure we meet all standards – both ours and yours – we undergo annual testing, including certification processes. That's because only one thing matters to us – the satisfaction and trust of our customers.

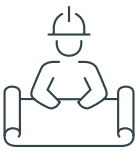

You will know more

We're happy to share with you the industry and application expertise we have gained over decades and extending far beyond drive technology areas. We work with you to plan and put into practice your tailored solutions in a process where you constantly evolve in tandem with us.



You will be more sustainable

We take responsibility for our employees, customers and business partners but also the environment in which we live and work. As a family business, we think in generations and always look beyond today and tomorrow. With us, you too can drive the future.



You will be more successful

Like you, we cannot afford to stand still. We provide continuous training for our employees and customers. We constantly expand our horizons and enhance our products, solutions and services, and thus your processes. You can only continue to be successful in the future with optimized workflows.

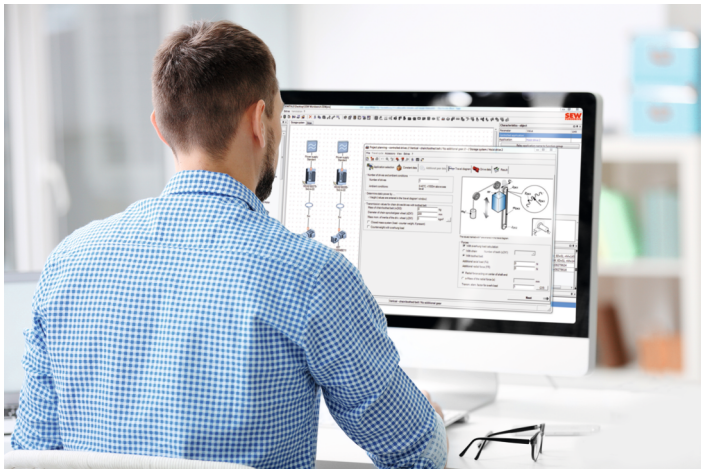

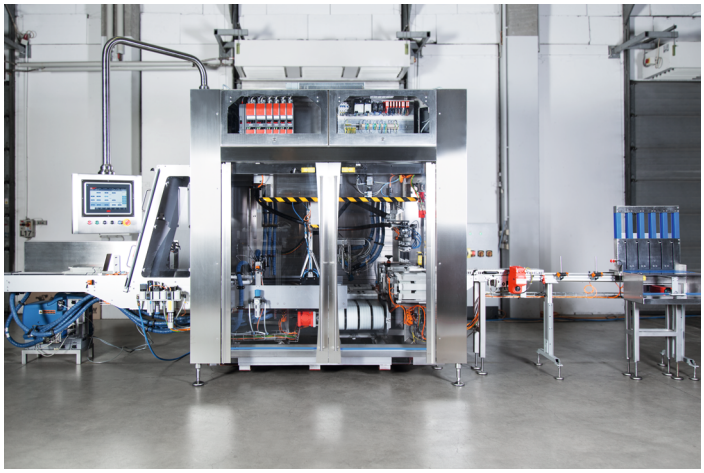

You will be more energy-efficient

We go out of our way to find new approaches and make our drives more efficient while always staying well ahead of international regulations. And, if you wish, we work with you to plan your systems and machines so that you can make the best possible use of energy recovery.

You will be more innovative

What's the point of innovations if they remain out of your reach? We listen to you, which makes us fully aware of your future challenges, and we respond accordingly. With our approximately 800 researchers and developers, we drive forward innovative technologies and help bring your processes up to date.

You will save more money

With us, you can lower your overall operating costs. After all, it isn't just a matter of procurement expenses. Your TCO is significantly determined by the subsequent utilization and service life of your drive technology. We provide you with comprehensive advice on how to reduce your costs through sustainable operations.

You will be close to us

Wherever in the world your system is running, our comprehensive service network and experts mean we're always ready to provide advice and practical assistance when you need it. All-in-one, on-site service that knows no bounds and significantly reduces or even eliminates downtimes.

You will be faster

Throughout the world, our service staff ensure spare parts get to you fast, and faulty drives – including third-party products – are collected and repaired quickly. Software tools make engineering and startup easier for you. Services covering your entire system life cycle help make you faster and more efficient.

1 Life Cycle Services

Perfect, fully comprehensive service

SEW-EURODRIVE offers you services that span the entire system life cycle – from planning through maintenance to modernization. Every aspect is covered from a single source – a company with more than 90 years of experience in drive and automation technology, that is always close at hand.

We would be more than happy to put together a customized service package for you – completely tailored to your needs and scalable at any time.

Your most important aims:

- Needs-based modernization
- Less downtime
- Fully comprehensive maintenance management

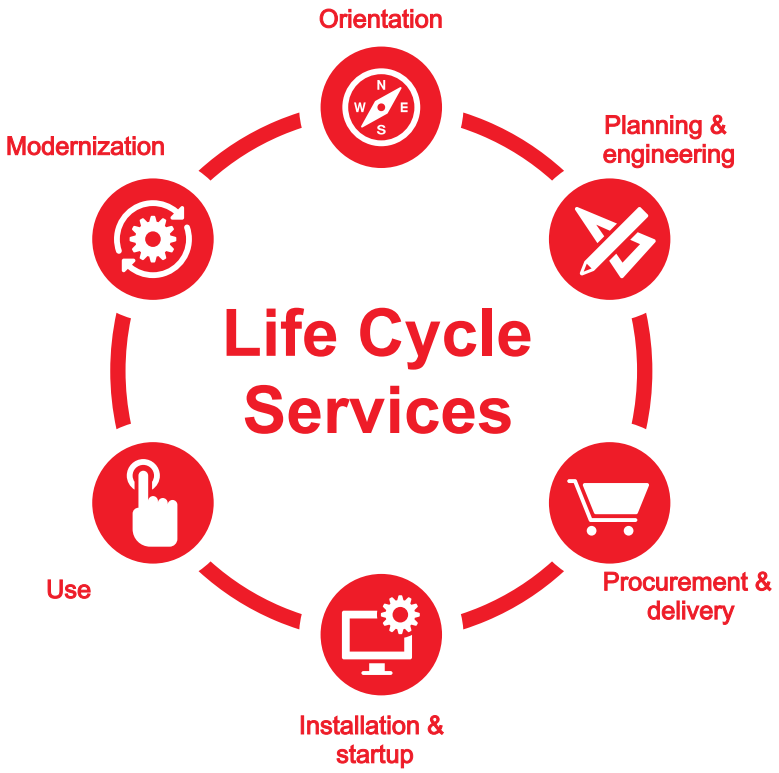







Everything from a single source
You are provided with services that are closely linked to our portfolio of products and solutions – all from a single source.

Procurement & delivery
We offer "extra" process efficiency and consulting in the procurement process. For example, electronic data exchange and barcode labels on the products.

Installation & startup
You can ensure the functionality of your system with a certified installation, optimization and startup. Doing this, you have the support of our service experts and engineers who will provide you with installation consulting, application programming and startup.

Safety
You receive quick and reliable assistance to guarantee the safety of your production process. With a worldwide service network that is always there for you with 24/7 accessibility.

Planning & engineering
We will provide you with optimum planning – even before you place an order. You will be supported by technical experts who have an in-depth understanding of your industry and applications.

Utilization phase
We support you during production, so that your system availability and productivity are constantly improved.

2 The gearmotors

A gearmotor is a compact, homogeneous unit consisting of a gear unit and a motor.

The central role is performed by the gear unit with its gear unit stages and gear wheel pairs. They transmit the torque and the speed of the motor from the input end to the output end, converting them in the process.

In most applications, the gear unit reduces the motor speed and increases the torque by the same ratio – something the electric motor alone could not achieve. The size and design of the motor and gear unit determine whether the gearmotor is suitable for light, medium, or heavy loads or for short or long duty cycles, for example.

Depending on whether the gear unit reduces or increases the speed of the motor, this is referred to as a reduction ratio or a gear ratio. The key parameter here is the speed ratio i between input speed and output speed.

A key criterion for distinguishing between gearmotors is the direction of the power flow within the gear unit. This results in various basic designs.

Parallel-shaft gear units

Helical gearmotor

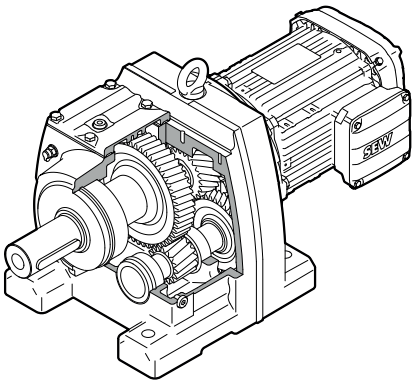

Parallel-shaft helical gearmotor

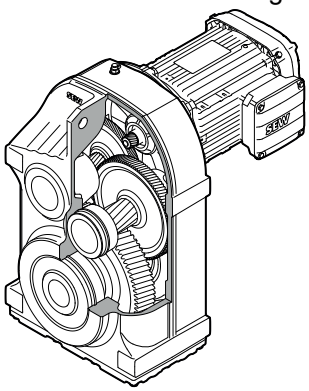

Right-angle gear units

Helical-bevel gearmotor

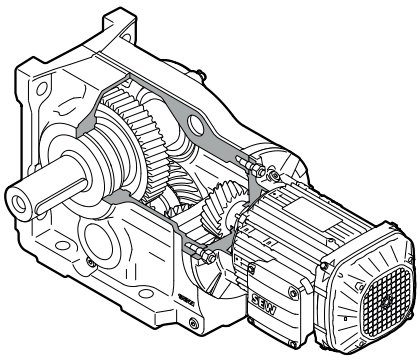

Helical-worm gearmotor

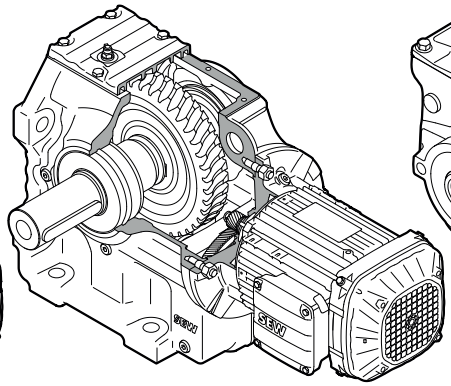

SPIROPLAN® right-angle gearmotor

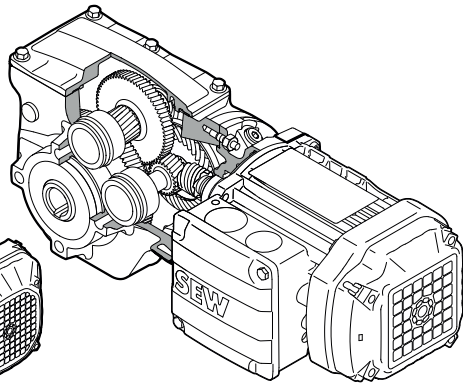

The possible applications for gearmotors are exceptionally varied. Without gearmotors, the entire global economy would come to a standstill. In industrial production, they drive a countless number of conveyor lines, lift and lower loads, and move the widest variety of different goods from A to B in all types of systems.

2.1 Helical gearmotors

Our helical gearmotors of the R..DR.. series are universal all-rounders for many of your application areas. With their high efficiency, they are ideally designed for a multitude of applications. Thanks to our consistent modular system, the helical gearmotors of the R..DR.. series offer you many combination options. Regardless of the design you finally decide on: You are always getting an optimum ratio between performance and intelligent use of space. Especially when you are looking for a space-saving drive solution.

Helical gear units are the secret classics in our gear unit range: 6 1-stage and 15 2- and 3-stage sizes cover a torque range from 50 Nm to 20000 Nm. This gear unit series is also far ahead in terms of gear unit ratios: from i = 1.30 to i = 289.74; in compound gear units even i = 27001. Torque ratings and gear unit ratios this finely stepped are hard to find on the market.

The demand for high output speeds or low weight is met by the R gear units as well, of course. Always with a high level of efficiency, our helical gear units offer an optimum ratio between torque output and installation space. This means: a helical gear unit almost always fits your application.

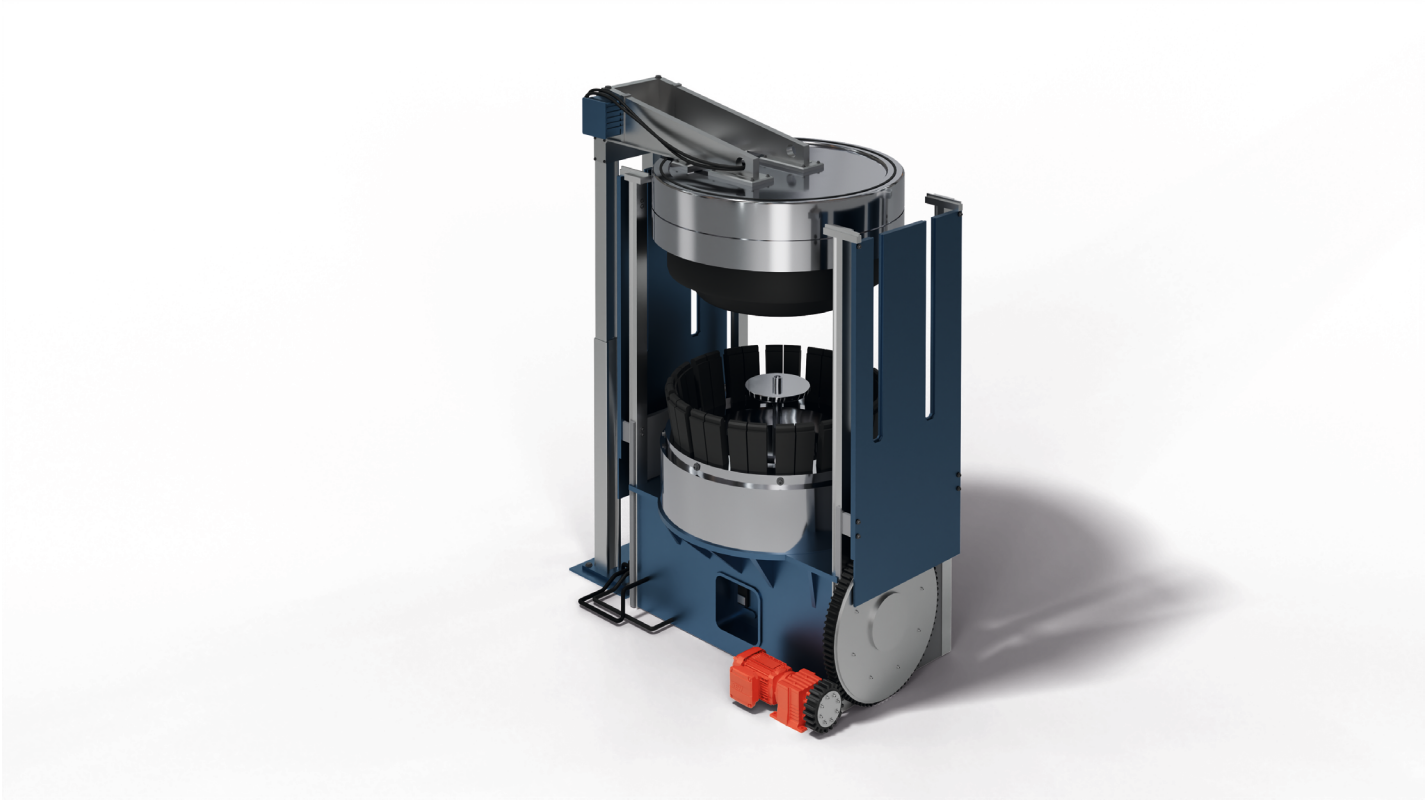

2.2 Parallel-shaft helical gearmotors

Space-optimized drive solutions are sought by you specifically in conveyor and process engineering. This is because your system architecture often only offers limited space for drive technology. For these applications, we offer our F..DR...-series parallel-shaft helical gearmotors. Use this structural advantage and benefit from the remarkably slim design of our F..DR.. parallel-shaft helical gearmotors.

A wide range of mounting positions and variants enable a broad spectrum of application even under difficult installation conditions – without having to compromise on the performance. In addition, many of our gear units also offer long maintenance-free service lives and gearing with infinite fatigue strength.

With a high torque rating from 130 to 20000 Nm, our parallel-shaft helical gear units offer great performance in many conveying and processing applications. You can choose from foot-, flange- or shaft-mounted designs. For precise positioning task, our parallel-shaft helical gear units are available with reduced backlash.



2.3 Helical-bevel gearmotors

Are you looking for a low-maintenance and largely wear-free but high torque drive solution? Then you are making the right decision with our helical-bevel gearmotors K..DR.. This is because we offer you gear units and motors combined as compact drive components: perfectly in tune with each other and adapted to your application.

The compact design of all our gear units is most obvious in our helical-bevel gear units. This property is particularly relevant in mechanical engineering applications where installation space is limited. Here, you need powerful drive technology with a compact design. This is just the right environment for our helical-bevel gear units with a torque range from 80 to 53000 Nm.

With their high efficiency in both directions of rotation and at any input speed, these right-angle gear units are very energy-efficient. Their high-endurance gearing is wear-free and lasts a gear unit's lifetime. For precise positioning tasks, you can use the helical-bevel gear units with reduced backlash. A long, maintenance-free operating life enhances this economy and efficiency. That is why our helical-bevel gear units are used in so many different applications. Worldwide!

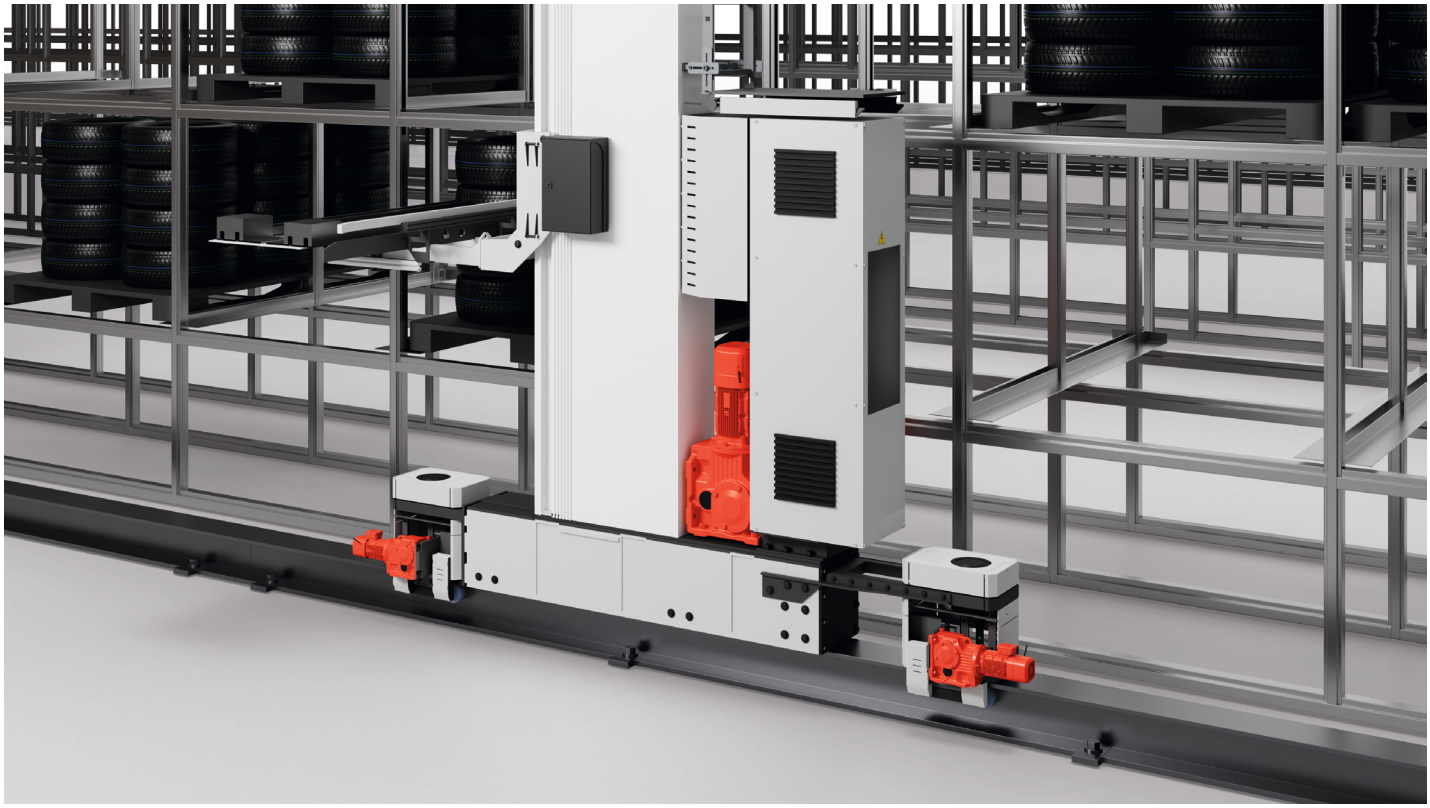

2.4 Helical-worm gearmotors

Their greatest strength is their running smoothness and their extremely low noise development. In a nutshell: With the S..DR.. helical-worm gearmotors you are choosing a powerful drive solution which you will hardly even hear.

Their cost-effectiveness is due to their simple design. The individual adjustment of torque and speed enables space-saving installation of our helical-worm gear units. Use S series helical-worm gear units as a cost-effective solution for meeting basic requirements in your machine or plant applications. The torque range extends from 92 Nm to 4,000 Nm. For the S..7p it is 105 Nm to 4300 Nm.

Adding an input-side helical gear stage makes it possible to achieve significantly higher efficiency than with conventional worm gear units. The linear power transmission makes these helical-worm gear units exceptionally smooth-running and low-noise. Why? The torque is transmitted via the worm shaft and the worm gear to the input shaft. In a process that reduces torque impulses and facilitates low noise levels.

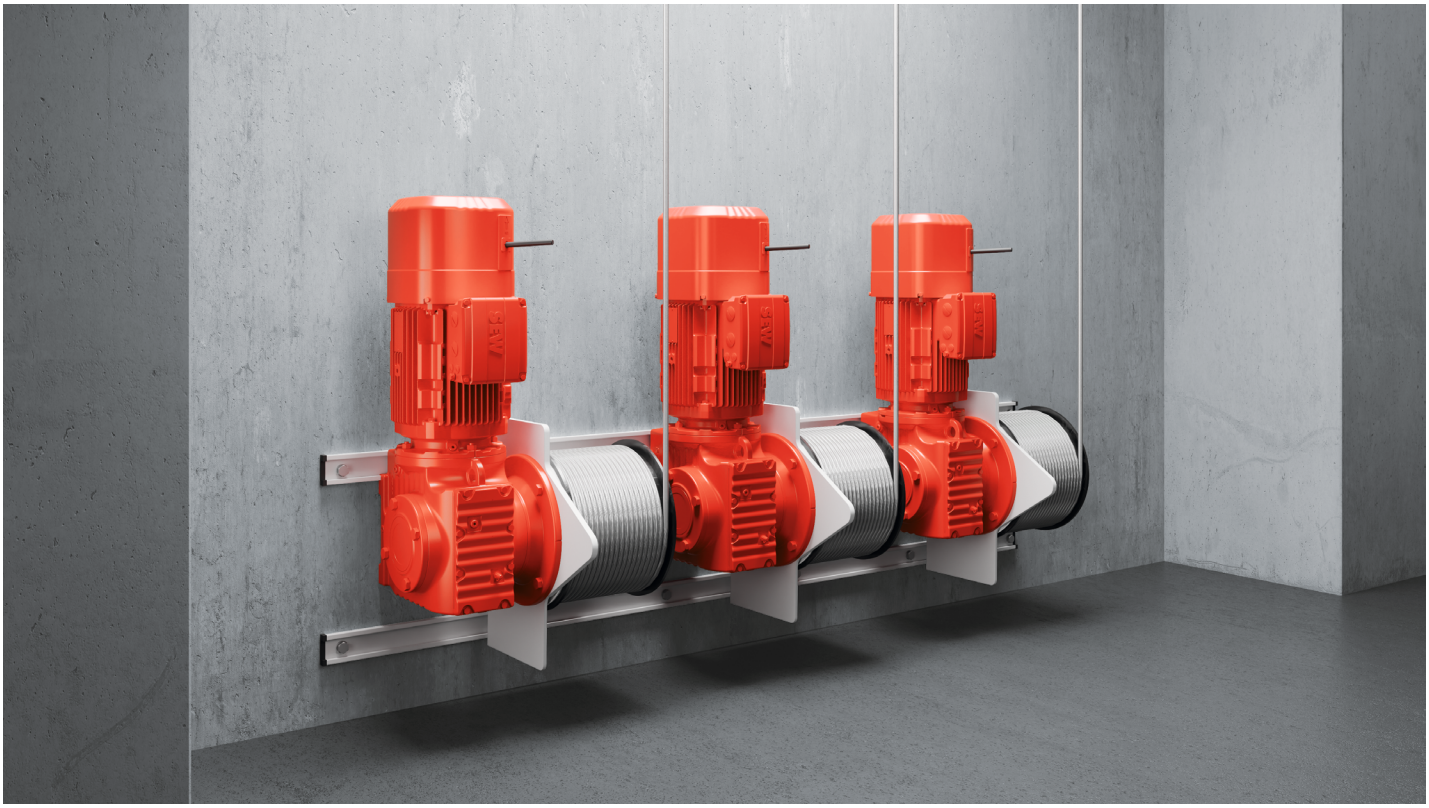

2.5 SPIROPLAN® right-angle gearmotors

If your system architecture requires a drive solution that implements top speed, we would recommend our SPIROPLAN® right-angle gearmotors: space-saving and simple to install.

What is special about SPIROPLAN® right-angle gear units is their wear-free gearing. It ensures reliable power transmission and speed adjustment for your materials handling system. Thanks to this gearing, our smallest right-angle gear units deliver permitted output torques up to 600 Nm in a motor power range from 0.09 kW to 4 kW.

The steel-steel material combination and the special tooth meshing ratio enable a short gear unit design, resulting in space-saving drive installation.



2.6 Product characteristics

With our helical gear units, helical-bevel gear units, parallel-shaft gear units, helical-worm gear units, and SPIROPLAN® right-angle gearmotors, SEW-EURODRIVE offers a unique product range in the industry. The world is these gearmotors' area of application. The world of motion.

The possible applications for gearmotors are exceptionally varied. Without gearmotors, the entire global economy would come to a standstill.

Thanks to their versatile properties, gearmotors from SEW-EURODRIVE are used in the following industries, among others:

- Industrial production
- Automotive industry
- Beverage industry
- Intralogistics
- Airports
- Entertainment industry

2.6.1 Operating conditions

Operating temperatures



Gear units and gearmotors from SEW-EURODRIVE are suitable for use in a wide range of ambient temperatures.

Gear units

When filling the gear units in accordance with the lubricant table, the following standard temperature ranges are permitted:

Gear unit	Filled with	Permitted standard temperature range
K..19 – K..49	CLP PG VG460	-20°C to +40°C
K..37 – K..187 **RX.57 – RX.107** **R.07 – R.167** **F..27 – F..157**	CLP(CC) VG220	-15°C to +40°C
S..37 – S..97	CLP(CC) VG680	0 °C to +40 °C
S..37p – S..97p	CLP PG VG460	-20 °C to +40 °C
W..10 – W..30	CLP PG VG460	-20 °C to +40 °C
W..19 – W..59	CLP PG VG220	-25 °C to +40 °C
W..29HG – W..59HG	CLP PG VG460	-20 °C to +40 °C

The nominal data of the gear units and gearmotors specified in the catalog refer to an ambient temperature of +25 °C. Outside the standard temperature range, you can use SEW-EURODRIVE gear units for ambient temperatures of up to -40 °C in the deep cooling range and up to +60 °C by adapting the project planning. The project planning must take into account the special operating conditions and adapt the drive to the ambient conditions by selecting suitable lubricants and seals. SEW-EURODRIVE recommends thermal project planning for the drives in general and offers to perform the project planning for you.

Motors

Motors from **SEW-EURODRIVE** are designed for use in a temperature range between -20 °C and +40 °C.

This expands the standardized temperature range required by IEC 60034.

Using the motors outside the above temperature range is possible with some special adjustments. Contact **SEW-EURODRIVE** in this case.

If the drive is to be operated on a frequency inverter, you must also observe the project planning notes of the inverter and take into account the effects of inverter operation on heating.

Installation altitude

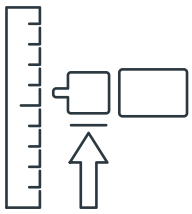

Due to the low air density at high installation altitudes, heat dissipation on the surface of motors and gear units decreases. The rated data specified in the catalog applies to an installation altitude of maximum 1000 m above sea level. Installation altitudes > 1000 m above sea level must be taken into account for the project planning of gear units and gearmotors.

Especially low output speeds without primary gear unit

Thanks to their large gear ratio range, the W..9HG gear units enable especially low rotational speeds without a primary gear unit. These gear units are identified by the suffix "HG" in the type designation.

International markets

Market access is contingent to local approvals in many countries. Additional laws, regulations, and market conventions must be adhered to. Experience has shown that an identification of the product is required together with certification. This is realized at SEW-EURODRIVE with one or several logos on the main nameplate, with additional labels on the motor, or by providing the relevant certificates.

The countries listed in the following example have special requirements for motors. The country-specific requirements apply to the motor in general, the efficiency and, if applicable, to the explosion protection. For further details, refer to the relevant catalogs.

Some countries, such as the states of the European Union impose certain requirements regarding the gear unit. The relevant marking is attached to the gear unit if these requirements are met.

Contact SEW-EURODRIVE if required.

Worldwide certifications

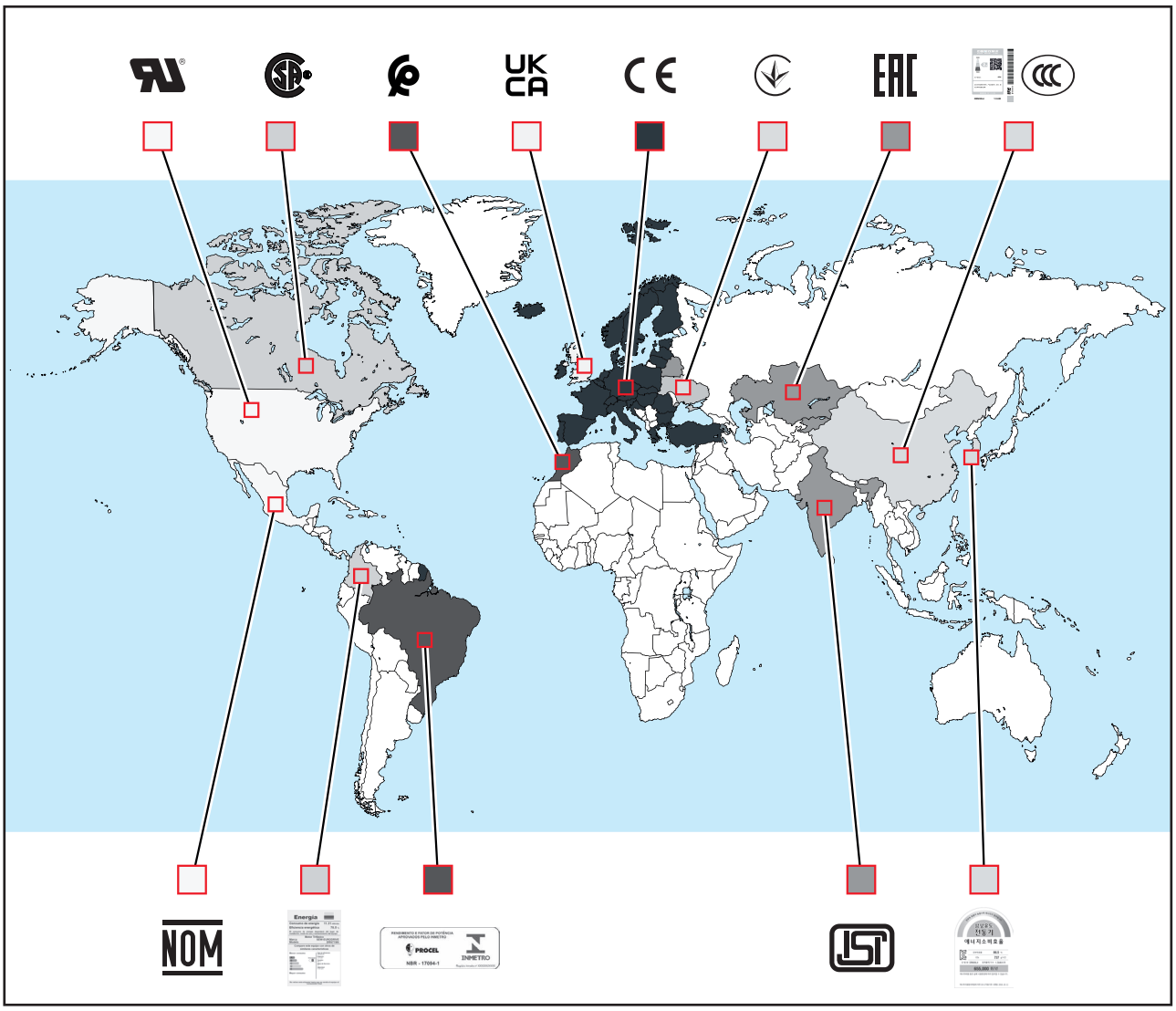

Country	Law/standard/regulation	Description	Identification on the nameplate
Australia/New Zealand	GEMS 2019	Registration of the motors/energy efficiency regulation	No further information
Brazil	Regulation Nº 4508	Product certification and factory certification	Advanced information on the nameplate
	Motor regulation Nº 1 ABNT 17094-1	Confirmation of efficiency	ENCE energy-saving label
China	CCC certification GB14711/CNCA-C04-01:2014	Small device specification Product certification and CCC factory certification	CCC marking
	GB30253-2024 / CEL038-2025	Energy efficiency regulation Product registration	CEL efficiency label
Europe (EU)	2014/35/EU	Low Voltage Directive	CE marking
	2009/125/EC & (EU) 1781/2019 & (EU) 2021/341	Ecodesign guideline/energy efficiency regulation	
	2014/30/EU	EMC Directive Manufacturer's declarations of conformity	
Eurasian Economic Union Armenia, Kazakhstan, Kyrgyz Republic	Technical Regulation TR CU 004/2011	Low Voltage Directive	EAC marking
	Technical Regulation TR CU 048/2019	Energy efficiency regulation Product certification and factory certification	
Great Britain	Electrical Equipment (Safety) Regulations 2016	Low Voltage Directive	UKCA marking
	The Ecodesign for Energy-Related Products Regulations 2021 & I.S. 2021 No. 745	Ecodesign guideline/energy efficiency regulation	
	Electromagnetic Compatibility Regulations 2016	EMC Directive Manufacturer's declarations of conformity	
India	IS12615	Energy efficiency regulation and additional requirements Product certification and factory certification	BIS mark
Japan	JIS 4034	Motor standard	Additional information on the nameplate
	JIS 4034-30	Efficiency	
Canada	CSA 22.2	Motor standard	CSA mark Additional information on the nameplate
	EER 2016	Energy efficiency regulation Product certification and factory certification	
Colombia	RETIQ	Efficiency	Advanced information on the nameplate
	RETIE	Electrical safety Product certification	URE label for the rational use of electrical energy

Country	Law/standard/regulation	Description	Identification on the nameplate
Morocco	N° 2573-14 (16.07.2015)	Low Voltage Directive	CMIM marking
	N° 2574-14 (16.07.2015)	EMC Directive Manufacturer's declarations of conformity	
Mexico	NOM-016-ENER-2016	Efficiency Product certification and factory certification	NOM mark Advanced information on the nameplate
Saudi Arabia	SASO-2893:2018	Efficiency Product certification	No further information
Switzerland	EnEV 730.02 (2020)	Energy efficiency regulation European directives adopted	CE marking
Singapore	Singapore's Energy Conservation Act 2013	Energy efficiency regulation Product registration	No further information
South Korea	REELS 2017-61	Efficiency Product certification and factory certification	KEL efficiency label
Turkey	SGM:2021/16	Energy efficiency regulation European directives adopted	CE marking
Ukraine	CMU No.62-2013	Machinery Directive	UA.TR mark
	CMU No 1067-2015	Low Voltage Directive	
	CMU No 1077-2015	EMC Directive	
	CMU No 157-2019	Requirements for environmentally friendly design of electric motors	
USA	EISA 2007/2014 DOE 10 CFR Part 431	Energy efficiency regulation	UR mark Additional information on the nameplate
	UL 1004-1	Proof of fire endurance based on recognized components Product specification and factory certification	
	NEMA MG1	Motor standard	

You can find further information on the certifications on the SEW-EURODRIVE website.

2.6.2 Properties of the gearmotors

Power and torque

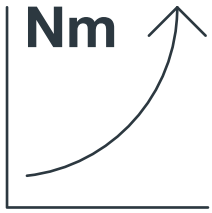

The specified power ratings and torques refer to mounting position M1 and comparable mounting positions in which the input stage does not completely run under oil. In addition, the gearmotors are assumed to be standard versions with standard lubrication and under normal ambient conditions.

Directions of rotation

Direction of rotation of the motor shaft

In accordance with the standard IEC 60034-8 defined as standard:

– Clockwise (CW) direction of rotation when looking onto the pinion shaft end of the motor.
  Prerequisite: Connection U1-V1-W1

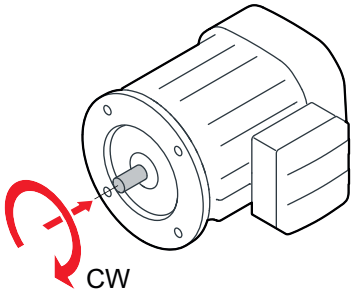

Direction of rotation of the output shaft

Standard direction of rotation as viewed onto the output shaft of the gear unit:

- CW (clockwise)
  Clockwise direction of rotation
- CCW (counterclockwise)
  Counterclockwise direction of rotation

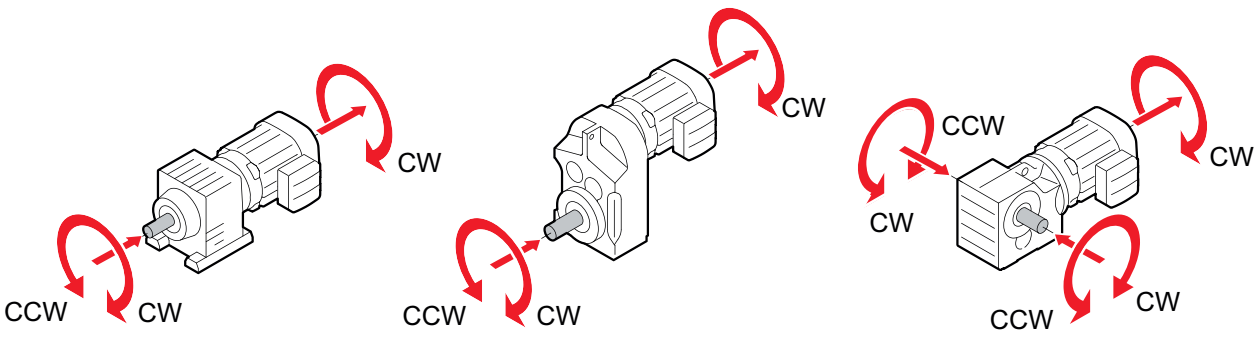

Direction of rotation of the gear unit

Shaft position A, B, or AB (shaft output at both ends) is possible for K.. helical-bevel gear units, S.. helical-worm gear units, and SPIROPLAN® W.. right-angle gear units. The direction of rotation is indicated according to the shaft position when looking onto the output end A or B or onto A and B respectively.

The following tables specify the standard direction of rotation for the CW direction of rotation of the motor.

Series	Size	Gear unit stages	Shaft position	Standard direction of rotation when looking onto output shaft[1]
RX	57 – 107	1		CCW
R	07 – 167	2		CW
		3		CCW
F	27 – 157	2		CW
		3		CCW

1 CW = clockwise; CCW = counterclockwise.

Series	Size	Gear unit stages	Shaft position	Standard direction of rotation when looking onto output shaft[1]	
				View onto output end A	View onto output end B
K	19 – 49	2	A	CW	
			AB	CW	CCW
			B		CCW
K	37 – 187	3	A	CCW	
			AB[2]	CCW	CW
			B		CCW
S	37 – 97	2	A	CW	

Series	Size	Gear unit stages	Shaft position	Standard direction of rotation when looking onto output shaft[1]	
				View onto output end A	View onto output end B
			AB	CW	CCW
			B		CCW
W	10 – 30	1	A	CCW	
			AB	CCW	CW
			B		CW
W	19 – 59	2	A	CW	
			AB	CW	CCW
			B		CCW
		3	A	CCW	
			AB	CCW	CW
			B		CW

1 CW = clockwise; CCW = counterclockwise.

2 For mounting position M.AB/A: View of output side A = CCW, view of output side B = CW. For mounting position M.AB/B: View of output side A = CW, view of output side B = CCW.

Speeds



The specified output speeds of the gearmotors are guide values. The output speed can be calculated based on the rated speed of the motor and the gear unit ratio. Note that the actual output speed depends on the motor load and the supply system conditions.

Noise

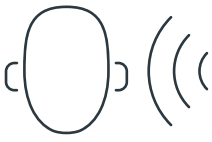

The sound power levels of the gear units, gearmotors, and motors correspond to ISO 8579-1 for gear units and gearmotors and comply with the limit values of IEC 60034 for motors.

Painting



The devices from SEW-EURODRIVE are painted as follows:

Type	Painting
R.., F.., K.., S.., W.. gear units	Blue gray RAL 7031

Exception:

The following gear units, motors, and gearmotors are delivered as standard in ECO2 design without paint.

Gear unit type and gear unit size	Motor size	Surface protection
R..07 – 27	56 – 90	ECO2
F..27		
K..19 – 29		
W..10 – 30		
W..19 – 59		

An alternative color or special paint finish is available on request.

ECO2 design



SEW-EURODRIVE offers a design without surface coating for certain drives.

The powerful ECO2 gearmotors made from uncoated aluminum are ECOlogical thanks to their environmentally friendly coating-free design (no coatings or solvents on outer surfaces) and ECOnomical as a result of their cost-efficient manufacture and assembly. They are suitable for use in machines and systems in buildings and indoor spaces with a dry, neutral atmosphere.

The coating-free drives in the ECO2 design have significant environmental benefits. The energy-intensive painting process is not required when manufacturing the product. In addition, the consumption of raw materials such as paints and solvents is avoided. At the end of the life cycle, the uncoated components can be reused or recycled more easily and more environmentally friendly.

For more information on the drives and their availability, contact SEW-EURODRIVE.

Heat dissipation and accessibility



Make sure to maintain adequate distance in the axial and radial direction when installing the drive to the driven machine. Space is required for maintenance and for air circulation for cooling.

Also observe the notes in the motor dimension sheets in the "AC Motors" catalog.

Sealing systems

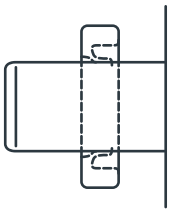

SEW-EURODRIVE offers sealing systems suitable for different ambient conditions and applications.

For the standard temperature range -20 °C to +40 °C, high-quality sealing systems made of NBR (nitrile butadiene rubber) are used on the gear unit as standard.

For detailed information on the available gearmotor sealing systems, refer to chapter "Sealing systems" (▸ 109).

GearOil and GearFluid by SEW-EURODRIVE



By using high-quality base oils and the latest additives, the lubricants from the **SEW-EURODRIVE** GearOil and GearFluid series increase the performance of gear units. They reduce friction in rolling and sliding contacts, resulting in increased efficiency and wear resistance.

GearFluid by **SEW-EURODRIVE** is the first CO_2-reduced gear unit lubricant on the market made from sustainable biomass. Eliminating the use of fossil raw materials results in a saving of 84% CO_2 compared to a conventional petroleum-based polyglycol lubricant.

Another important aspect is the compatibility with the sealing materials, surfaces and coatings in the product. The precision planetary gear units are lubricated for life at the factory. Depending on the range of application, the lubricant can be flexibly selected. Food-grade lubricants are also available for the use in food industries.

2.6.3 Special features

Multi-stage gearmotors



Particularly low output speeds are achieved with compound gear units or compound gearmotors. A helical gear unit is mounted on the input side as a second gear unit.

In this case, the maximum motor torque must be limited according to the maximum permitted output torque of the gear unit.

Gear units and gearmotors for agitators and mixers

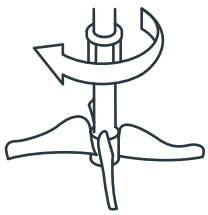

A special design variant of the helical gear, parallel-shaft and helical-bevel gear units are gear units and gearmotors equipped with an extended output bearing hub (RM../FM../FAM../KM.. and KAM..). These units are designed especially for agitator and mixer applications and enable high bending moments as well as overhung and axial loads. The remaining data corresponds to those of standard gear units and standard gearmotors. For more information on gear units and gearmotors for agitators and mixers, refer to chapter "Agitator designs" (▶ 108).

Brakemotors



The motors and gearmotors are supplied with an integrated mechanical brake on request.

The **SEW-EURODRIVE** brake is an electromagnetic disk brake with a DC coil that releases electrically and brakes using spring force. Due to its operating principle, the brake is applied if the power fails. The brake meets the basic safety requirements. The brake can also be released mechanically if equipped with a manual brake release. Included in the delivery is either an automatic disengaging hand lever or an adjustable set screw. The brake is controlled by a brake control that is installed in either the motor wiring space or the control cabinet.

A key feature of the brakes is the very short design. The brake endshield is a part of both the motor and the brake. The integrated construction of the **SEW-EURODRIVE** brakemotor permits particularly compact and sturdy solutions.

Swing base

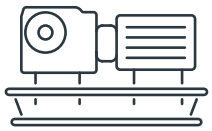

A swing base is a drive unit consisting of helical-bevel gear unit, hydraulic start-up coupling, and electric motor. They are completely mounted on a torsionally rigid mounting rail.

The swing bases are available with the following optional accessories:

- Torque arm
- Mechanical thermal monitoring device
- Contactless thermal monitoring device

Contact **SEW-EURODRIVE** for additional information.

SPIROPLAN® right-angle gearmotors

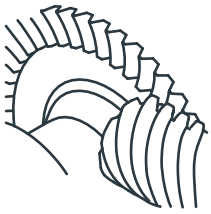

The SPIROPLAN® right-angle gearmotors are robust, 1-, 2-, and 3-stage right-angle gearmotors with SPIROPLAN® gearing. The difference to the helical-worm gear units is the material combination of the steel-steel gearing, the special tooth engagement ratios and the aluminum housing. As a result, SPIROPLAN® right-angle gearmotors are wear-free and lightweight.

Thanks to the particularly short design and aluminum housing, very compact drive solutions can be realized.

The wear-free gearing and the lubrication for life facilitate long periods of maintenance-free operation. The identical hole spacing in the foot and face as well as the same shaft height to both makes for a number of mounting options.

On request, SPIROPLAN® right-angle gearmotors can be equipped with a torque arm.

Condition monitoring

Vibration monitoring system /DUV40A

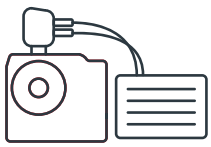

The DUV40A vibration monitoring system is used to detect damage of gear units and gearmotors at an early stage (e.g. bearing damage or imbalances). Permanent broadband frequency-selective monitoring of the gearmotor is used for this purpose. Apart from the vibration analysis, additional measured values of up to 3 signal encoders can be detected, recorded, and analyzed. The additional signals can be used as reference values for signal analysis e.g. to trigger event-based measuring tasks. After the analysis and, depending on alarm limits defined during rated operation of the drive (teach-in mode), the system can switch outputs and display the alarm state using LEDs.

The SmartWeb software is used to configure and visualize the DUV40A system. If you use several DUV40A systems, you can control them via the SmartUtility Light software centrally from one PC (this software is included in the scope of delivery).

If you purchase the full version of the SmartUtility, you can analyze measurement data in the SmartUtility Viewer and download configurations or upload them onto other devices.

For further information, refer to chapter "Information on the vibration monitoring system /DUV40A" (▶ 103).

/DUE brake monitoring system



The option diagnostic unit /DUE (Diagnostic Unit Eddy Current) is a contactless measuring system for function and wear monitoring of the BE.. brake.

This option is designed for industrial environments and is used to monitor the function and the maximum working air gap of the BE.. brakes from SEW-EURODRIVE.

The /DUE diagnostic unit comprises the following parts:

- An evaluation unit in the motor terminal box that is supplied via a DC 24 V voltage
- A sensor, installed in the magnet body of brakes BE1 to BE122

Retrofitting options

Brakemotors from SEW-EURODRIVE can be retrofitted with the /DUE diagnostic unit. However, the drive combination has to be checked to determine all necessary conversion parts. Contact SEW-EURODRIVE if you would like to retrofit an existing drive with the diagnostic unit /DUE.

Condition monitoring in the modular system of digital motor integration

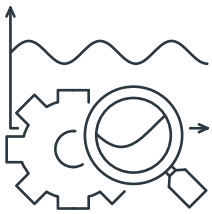

Brake controls with an extended functional scope are available in the MOVILINK® DDI option portfolio. The options of the BG.Z, BS.Z, and B series are brake controls that are integrated in the drive or inverter.

BG.Z and BS.Z are connected in the control cabinet via the MOVILINK® DDI interface in the MOVI-C® modular automation system, whereas the HV brake control B is an option of decentralized inverters from the MOVI-C® modular automation system.

In addition to the basic function of brake monitoring, these brake controls have implemented functions for condition monitoring of the brake and its wear condition and for self-monitoring of the brake control as standard.

BG.Z brake control

With their wide voltage input (supply with low voltage according to IEC 60050 in the specified range), the BG.Z brake controls enable spring-loaded brakes from the BE.. and BZ.. series to be operated in a large supply voltage range. Previously, it was necessary to select a rated brake voltage to adapt to the local AC voltage network.

With these brake controls, the use of a rated brake voltage is possible over the entire supply voltage range in a completely network-independent way. This provides you with an advantage in terms of logistics and maintenance, since only one brake type needs to be used in one rated brake voltage with one brake control. The same type of brakemotor and the same spare parts can be used.

Corrosion and surface protection

General information

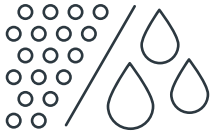

For motor and gear unit operation in aggressive environments, **SEW-EURODRIVE** optionally offers the following preventive measure:

- KS corrosion protection for motors
- Surface protection OS for motors and gear units

For motors, optimum protection is offered by a combination of KS corrosion protection and OS surface protection.

Optional preventive measures are also available for the output shafts.

KS corrosion protection



KS corrosion protection for motors consists of the following measures:

- All retaining screws that are loosened during operation are made of stainless steel.
- The nameplates are made of stainless steel.
- A top coating is applied to various motor parts.
- The flange contact surfaces and shaft ends are treated with a temporary rust preventive.
- For brakemotors, additional measures are performed.

A label with the word "KORROSIONSSCHUTZ" (corrosion protection) on the fan guard indicates that special treatment has been applied.

The following motor options cannot be supplied with KS corrosion protection:

- Forced cooling fan /V
- Cone shaft encoder /EK8. /AK8.
- Built-in encoder /EI7. /EI8. (Can be combined with option /2W)

OS surface protection

As an option for standard surface protection, motors and gear units are also available with OS1 to OS4 surface protection. The special measure "Z" is also available. Special measure "Z" means that large contour recesses are filled with rubber before painting.

Surface protection[1, 2]		Ambient conditions	Sample applications
Standard ECO2	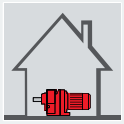	Suitable for machines and systems in buildings and indoor spaces with neutral atmospheres. Based on corrosivity category[3]: ▪ C1 (very low)	▪ Machinery and systems in the automotive industry ▪ Transport systems in the logistics area ▪ Conveyor belts at airports
OS1	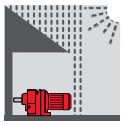	Suitable for environments prone to condensation and atmospheres with low humidity or contamination, such as applications outdoors under roof or with protection device. Based on corrosivity category[3]: ▪ C2 (low)	▪ Systems in saw mills ▪ Industrial doors ▪ Agitators and mixers
OS2	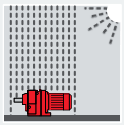	Suited for environments with high humidity or moderate atmospheric contamination, such as applications outdoors that are subject to direct weathering. Based on corrosivity category[3]: ▪ C3 (medium)	▪ Applications in amusement parks ▪ Funiculars and chair-lifts ▪ Applications in gravel plants ▪ Systems in nuclear power plants
OS3	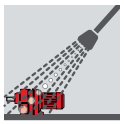	Suitable for environments with high humidity and occasional severe atmospheric and chemical contamination. Occasional acidic or caustic wet cleaning. Also for applications in coastal areas with moderate salt exposure. Based on corrosivity category[3]: ▪ C4 (high)	▪ Sewage treatment plants ▪ Port cranes ▪ Mining applications
OS4	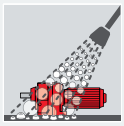	Suitable for environments with permanent humidity and severe atmospheric or chemical contamination. Regular acidic and caustic wet cleaning, also with chemical cleaning agents. Based on corrosivity category[3]: ▪ C5 (very high)	▪ Drives in malting plants ▪ Wet areas in the beverage industry ▪ Conveyor belts in the food industry

1 Motors/brakemotors in degree of protection IP56 or IP66 are only available with OS2, OS3, or OS4 surface protection.

2 Gearmotors with OS2 – OS4 surface protection are only offered in combination with KS corrosion protection for motors.

3 According to ISO 12944-2, classification of ambient conditions.

Special protection measures

Output shafts for gear units and gearmotors can be treated with special optional protective measures for operation subject to severe environmental pollution or in particularly demanding applications.

Measure	Protection principle	Suitable for
Stainless steel output shaft	Surface protection with high-quality material	Particularly demanding applications in terms of corrosion

NOCO-Paste



SEW-EURODRIVE supplies the NOCO-Paste corrosion protection and lubricant fluid with every hollow shaft gear unit as standard. Use NOCO-Paste when installing gear units with hollow shaft. You thereby reduce any fretting corrosion that occurs and make subsequent disassembly easier. NOCO-Paste is also suitable for protecting machined metal surfaces that do not have corrosion protection. These include parts of shaft ends or flanges, for example. You can also order NOCO-Paste in larger quantities from SEW-EURODRIVE.

NOCO-Paste is a food grade substance according to NSF. The food-grade NOCO-Paste has a corresponding NSF-H1 label on the packaging.

Batch size	Packaging type	Part number
5.5 g	Sachet	03054667
50 g	Tube	03054675
1 kg	Can	03054683

Table 1: NOCO-Paste H1 E1

With reduced backlash

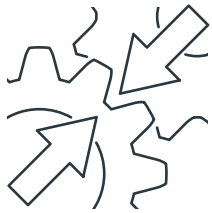

Helical gear units, parallel-shaft helical gear units, and helical-bevel gear units with reduced backlash (only K..7) are available as of gear unit size 37.

The rotational clearance of these gear units is significantly smaller than that of the standard designs which means that positioning tasks can be solved with great precision. The rotational clearance $\varphi_{(/R)}$ is specified in angular minutes in chapter "Geometrically possible combinations". The rotational clearance for the output shaft is specified without load (max. 1% of the rated output torque); the gear unit input end is blocked. The specified values have a tolerance of ± 2 angular minutes.

For more information, refer to chapter "Gear unit dimensions for reduced backlash" (▷ 1066).

Advanced bearing arrangement for hollow shafts



With the advanced bearing arrangement, the standard deep groove ball bearings are replaced with tapered roller bearings. This measure enables considerably higher overhung and axial loads and at the same time an increased service life of the bearings.

For FA./FH.87 and FA./FH.97 gear units, the advanced bearing arrangement changes the gear unit dimensions (see chapter "Gear unit dimensions with reinforced bearings" (▷ 1064)). With all gear units, the dimensions of the gear units with advanced bearing arrangement are identical to those of the gear units with standard bearings.

Contact SEW-EURODRIVE for additional information.

2.7 Further details on the gearmotors

2.7.1 Lubricants



Unless a special arrangement has been made, SEW-EURODRIVE supplies the drives with a lubricant fill adapted for the specific gear unit and mounting position. The decisive factor is the specification of the mounting position when ordering the drive. You must adapt the lubricant fill to any subsequent changes made to the mounting position.

GearOil by SEW-EURODRIVE – premium lubricant for gear units



With decades of experience in gear unit development and construction, as well as numerous customer applications, SEW-EURODRIVE has extensive tribological knowledge. On this basis and in accordance with long-term test runs, SEW-EURODRIVE has developed a special formulation for its own premium gear oil: GearOil by SEW-EURODRIVE – the optimum protection for SEW-EURODRIVE gear units.

By using high-quality base materials and additives as well as the appropriate logistics, SEW-EURODRIVE ensures the highest level of quality.

GearOil by SEW-EURODRIVE increases the performance of the gear unit, regardless of whether it is a standard, servo, or industrial gear unit. The premium gear oil reduces the friction between gear wheels by creating a very good lubrication film. This increases the service life of lubricant and wear parts, such as sealing rings and bearings. The high load-carrying capacity of the GearOil Base mineral lubricants (load-carrying capacity 14) improves protection from fretting on the gearing.

At the same time, GearOil increases the efficiency of the gear unit and protects against corrosion and harmful foaming of the oil. The "self-cleaning" properties of the lubricants prevent deposits as they bind water and dirt particles.

Optionally, you can select GearOil by SEW-EURODRIVE as the initial filling for the gear units and gearmotors. The premium gear oil can be ordered in can or barrel containers for service and maintenance purposes.
GearOil by SEW-EURODRIVE can be stored for up to 6 years in unopened containers.

Refer to the following table for the amounts available to order and the respective part numbers:

GearOil Base	Canister 1 liter	Canister 5 liters	Canister 20 liters	Barrel 205 liters	IBC 1000 liters
GearOil Base 150 E1			03287866	03287742	03096750
GearOil Base 220 E1	03044130	03044084	03287858	03287734	03096688
GearOil Base 320 E1				03287726	03096742
GearOil Base 460 E1				03287718	03096734
GearOil Base 680 E1			03287815	03287696	
GearOil Base 680 S E1	03044432		03287807	03287688	03096718

GearOil Poly	Canister 1 liter	Canister 5 liters	Canister 20 liters	Barrel 205 liters
GearOil Poly 150 E1		03099296		03099172
GearOil Poly 220 E1	03044211	03099288		03099164
GearOil Poly 460 E1		03099261		03099148
GearOil Poly 460 W E1		03096599	03287750	03287645
GearOil Poly 150 H1 E1		03099253		03099121
GearOil Poly 220 H1 E1		03099237	03099180	03099113
GearOil Poly 460 H1 E1	03044165	03287076	03288099	03287068

GearOil Synth	Canister 1 liter	Canister 5 liters	Canister 20 liters	Barrel 205 liters
GearOil Synth 150 E1		03042545	03042413	03042308
GearOil Synth 220 E1	03044270	03042537	03042405	03042294
GearOil Synth 320 E1		03042529	03042391	03042286
GearOil Synth 460 E1		03042510	03042383	03042278
GearOil Synth 680 E1		03042502	03042375	03042251
GearOil Synth 220 H1 E1		03042596	03042464	03042340
GearOil Synth 460 H1 E1	03044319	03042588	03042456	03042332

For more information on using GearOil lubricants and on the main technical properties, refer to the lubricant tables in chapter "Lubricant tables" (▸ 40).. Technical data sheets and safety data sheets are available from SEW-EURODRIVE on request.

Grease by SEW-EURODRIVE – lubricant for rolling bearings

Grease by SEW-EURODRIVE is intended for use in all types of gear unit bearings and for lubricating oil seals in the gear unit and motor.

The performance potential of Grease by SEW-EURODRIVE has been proven in extensive tests. It meets the highest requirements, which also ensures compatibility with the materials of the oil seals used. In addition, great emphasis was placed on compatibility with the lubricating oils approved by SEW-EURODRIVE. The use of GearOil or GearFluid by SEW-EURODRIVE together with Grease by SEW-EURODRIVE results in a coordinated lubrication system with a high gear unit efficiency and maximum performance at all operating points.

Grease by SEW-EURODRIVE is a high-performance grease with high thermal and mechanical stability for all highly loaded friction points (bearings and seals) in the gear unit and the seals in the motor. This minimizes sealing ring wear and reduces the risk of premature roller bearing failure.

Grease by SEW-EURODRIVE is also available in an NSF H1 certified variant that is approved for use in the beverage, food and feed industry.

Lubricant	500 g cartridge
Grease HL2 E1	03041476
Grease HL2 H1 E1	03041484

Bearing greases

The gear unit rolling bearings are given a factory-fill with the greases described below.

The table shows the lubricants recommended by SEW-EURODRIVE:

Area of application	Ambient temperature	Manufacturer	Type
Standard	-40°C to +80°C	SEW-EURODRIVE	Grease HL 2 E1[1]
		Fuchs	Renolit CX-TOM 15[1]
		Klüber	Petamo GHY 133 N
 2	-40°C to +40°C	SEW-EURODRIVE	Grease HL 2 H1 E1
		Bremer & Leguil	Cassida Grease GTS 2
 3	-20°C to +40°C	Fuchs	Plantogel 2S

1 Bearing grease based on semi-synthetic base oil.

2 Lubricant for the food processing industry.

3 Easily biodegradable lubricant for environmentally sensitive areas.

The rolling bearings do not need to be re-greased. If the rolling bearings have been washed or new ungreased rolling bearings are installed, the rolling bearings must be filled with the following grease quantities:

- **For fast-running bearings (gear unit input side):** Fill the cavities between the rolling elements one-third full with grease.
- **For slow-running bearings (gear unit output side):** Fill the cavities between the rolling elements two-thirds full with grease.

Lubricant tables

The lubricant recommendation provided in the lubricant table in no way represents a guarantee as to the quality of the lubricant delivered by each respective supplier. Lubricant manufacturers are responsible for the quality of their own products.

Oils of the same viscosity class from different manufacturers do not have the same characteristics. In particular, the minimum and maximum permitted oil bath temperatures are manufacturer-specific. These temperatures are specified in the lubricant tables.

The oil viscosity and type (mineral/synthetic) to be used are determined by SEW-EURODRIVE specifically for each order. This information is noted in the order confirmation and on the gear unit's nameplate. If you use other lubricants for the gear units and/or use the lubricants at temperatures outside the recommended temperature range, SEW-EURODRIVE does not assume liability.

The values specified in the lubricant tables apply as of the time of printing of this document. The data of the lubricants is subject to dynamic change by the lubricant manufacturers.

For the latest information on lubricants, refer to **www.sew-eurodrive.de/schmierstoffe**.

To avoid gear unit damage, use only one lubricant type.

Do not mix synthetic lubricants.

Do not mix synthetic lubricants and mineral lubricants.

Information on the table structure

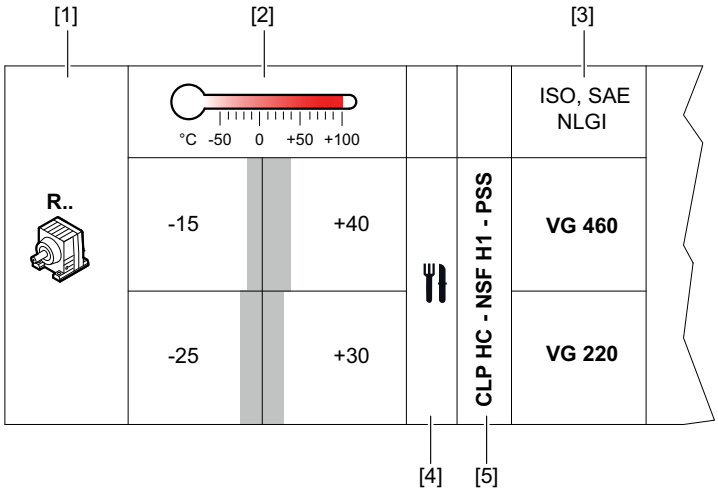

[1] Gear unit type
[2] Ambient temperature range
[3] Viscosity class
[4] Information about special approvals
[5] Lubricant type

The specified ambient temperatures are guide values for selecting a suitable lubricant. The exact upper and lower temperature limits for project planning are specified in the table with the respective trade name. Bear in mind during project planning that the viscosity increases at low temperatures and that this might influence the starting behavior.

Information on the various lubricants

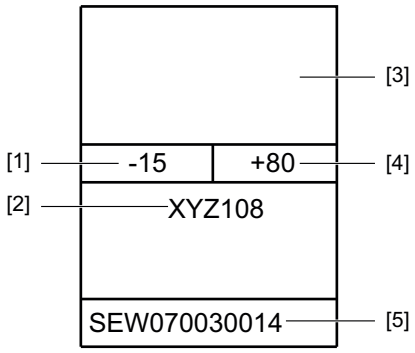

[1] Lowest oil sump temperature in °C, going below this value during operation is not permitted.
[2] Trade name
[3] Manufacturer
[4] Highest oil sump temperature in °C. The service life will be considerably reduced when this temperature is exceeded. Observe the information on the lubricant change intervals in the operating instructions.
[5] Approvals regarding compatibility of the lubricant with approved oil seals

Lubricant compatibility with oil seals

Approval	Explanation
SEW07004_ _13:	A lubricant especially recommended with regard to compatibility with the approved oil seals. The lubricant exceeds the state-of-the-art requirements regarding elastomer compatibility.

Key

The following table shows the symbols and abbreviations used in the lubricant table and their meaning.

Abbreviation/symbol	Meaning
	Synthetic lubricant (marked gray)
	Mineral lubricant
CLP	Mineral oil
CLP PG	Polyglycol (PG)
rPCF	Reduced Product Carbon Footprint
CLP HC	Synthetic hydrocarbons – polyalphaolefins (PAO)
E	Ester-based oil
	Lubricant for the food processing industry and feed industry. Oils are NSF-H1 registered and compliant in accordance with FDA 21 CFR § 178.3570.
	Lubricants with particularly reduced CO_2 footprint (cradle-to-gate) with sustainable raw materials
	Lubricants with good bio-degradability for environmentally sensitive areas (> 60% according to OECD 301 or according to appendix A of EPA 2013 VGP)
	Lubricant suitable for explosion-protected gear units and gearmotors
1)	Helical-worm gear units with CLP-PG: Contact SEW-EURODRIVE.
2)	Low-viscosity grease
3)	With appropriate measures, the gear units can be operated at ambient temperatures as low as -40 °C. Contact SEW-EURODRIVE.
4)	Oils for the food processing industry cannot be combined with the gear unit option "Extended storage" (a VCI anti-corrosion agent is added).
RWDR	Oil seal
PSS	Oil seal of the Premium Sine Seal type. The addendum "PSS" for the lubricant type indicates compatibility with the sealing system.
SPC	Special product classification: Observe the safety data sheet for product classification. Separate handling is required.

Lubricant table for R.., F.., and K..7 gear units

The lubricant table is valid on the day this document is published. Refer to **www.sew-eurodrive.de/lubricants** for the latest tables.

Observe the thermal application limit of the oil seal materials under "Lubricant compatibility with oil seals" (▶ 42).



R.. RES K..7 KES HK.. F.7	[3] °C -50 0 +50 +100	[1]	[2]	ISO,SAE NLGI	SEW EURODRIVE	bremer & leguil	Castrol	FUCHS	Mobil	KLÜBER LUBRICATION	Shell	SINOPEC	TotalEnergies
	[4] -15 +40		CLP	VG 220	-15 +80 GearOil Base 220 E1/US1/CN1/BR1 SEW 070040313		-15 +80 Optigear BM 220	-15 +80 Renolin CLP 220 Plus SEW 070040313	-15 +80 Mobilgear 600 XP 220 SEW 070040013	-15 +80 Klüberoil GEM 1-220 N	-15 +80 Shell Omala S2 GX Plus 220	-15 +80 AP-SGO 220 SEW 070040313	-15 +80 Cater EP 220
	-20 +30			VG 150	-20 +80 GearOil Base 150 E1/US1/CN1/BR1 SEW 070040313		-20 +80 Optigear BM 150	-20 +80 Renolin CLP 150 Plus SEW 070040313	-20 +80 Mobilgear 600 XP 150 SEW 070040013	-20 +80 Klüberoil GEM 1-150 N	-20 +80 Shell Omala S2 GX Plus 150	-20 +80 AP-SGO 150 SEW 070040313	-20 +80 Cater EP 150
	[4] -15 +40		CLP PSS	VG 220	-15 +80 GearOil Base 220 E1/US1/CN1/BR1 SEW 070040313			-15 +80 Renolin CLP 220 Plus SEW 070040313	-15 +80 Mobilgear 600 XP 220 SEW 070040013			-15 +80 AP-SGO 220 SEW 070040313	
	-20 +30			VG 150	-20 +80 GearOil Base 150 E1/US1/CN1/BR1 SEW 070040313			-20 +80 Renolin CLP 150 Plus SEW 070040313	-20 +80 Mobilgear 600 XP 150 SEW 070040013			-20 +80 AP-SGO 150 SEW 070040313	

[1] Note on special approvals
[2] Oil type
[3] Ambient temperature range
[4] Standard

The lubricant table is valid on the day this document is published. Refer to **www.sew-eurodrive.de/lubricants** for the latest tables.

Observe the thermal application limit of the oil seal materials under "Lubricant compatibility with oil seals" (▸ 42).

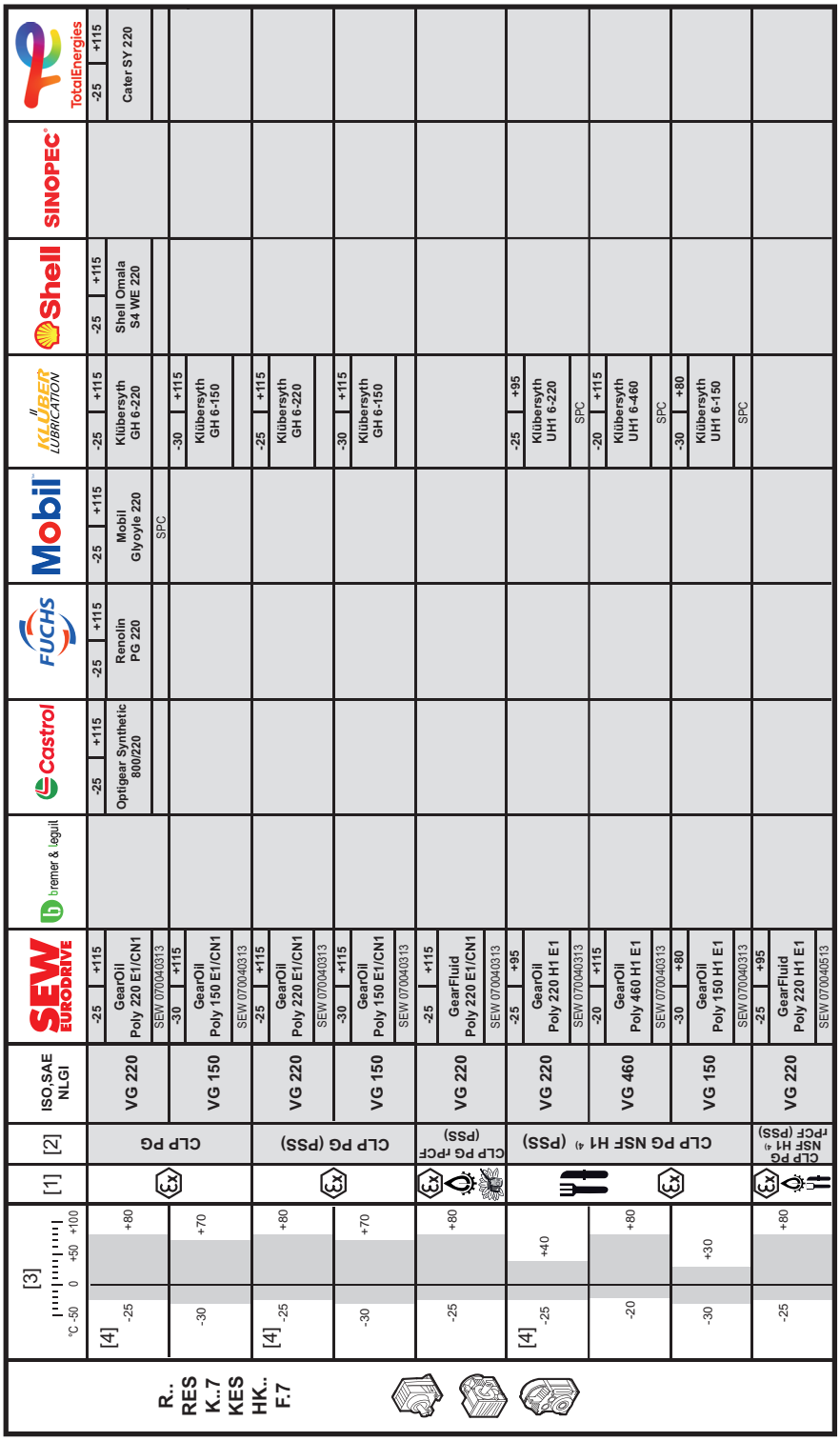

[1] Note on special approvals
[2] Oil type
[3] Ambient temperature range
[4] Standard

The lubricant table is valid on the day this document is published. Refer to **www.sew-eurodrive.de/lubricants** for the latest tables.

Observe the thermal application limit of the oil seal materials under "Lubricant compatibility with oil seals" (▸ 42).

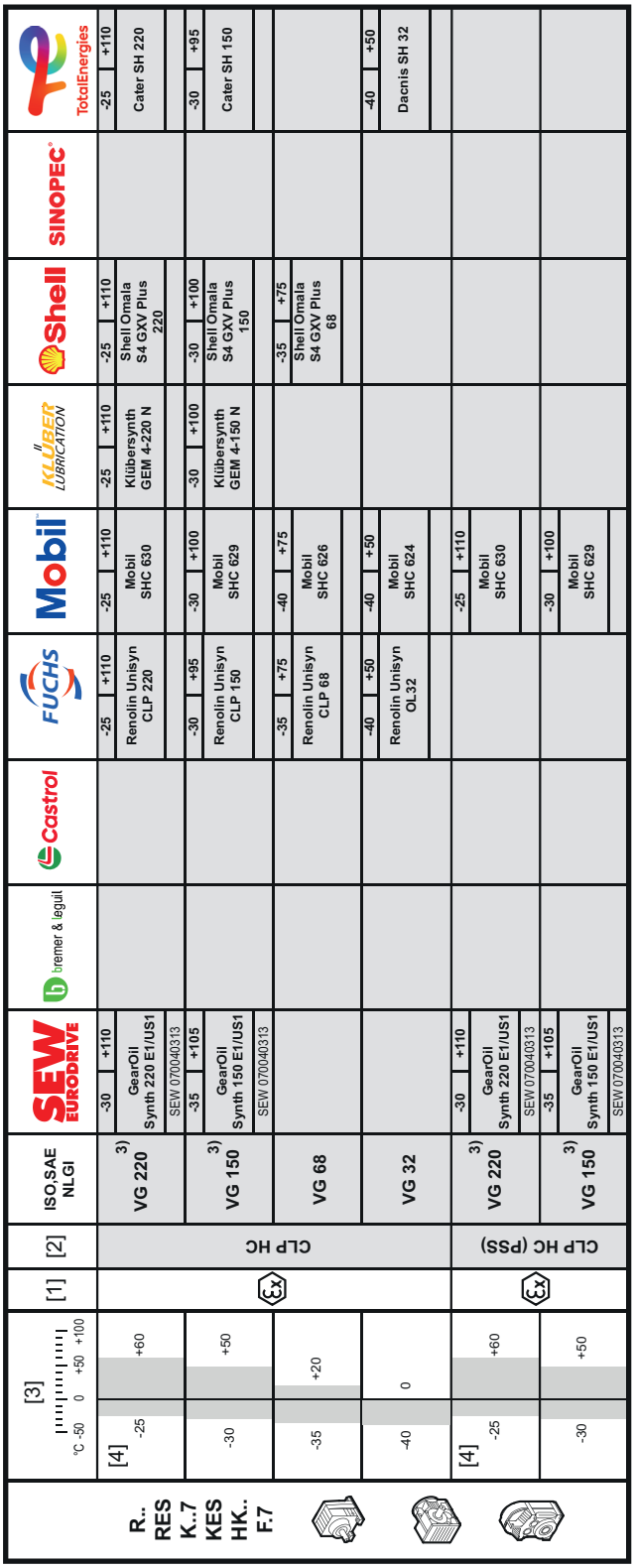

[1] Note on special approvals
[2] Oil type
[3] Ambient temperature range
[4] Standard

The lubricant table is valid on the day this document is published. Refer to **www.sew-eurodrive.de/lubricants** for the latest tables.

Observe the thermal application limit of the oil seal materials under "Lubricant compatibility with oil seals" (▶ 42).

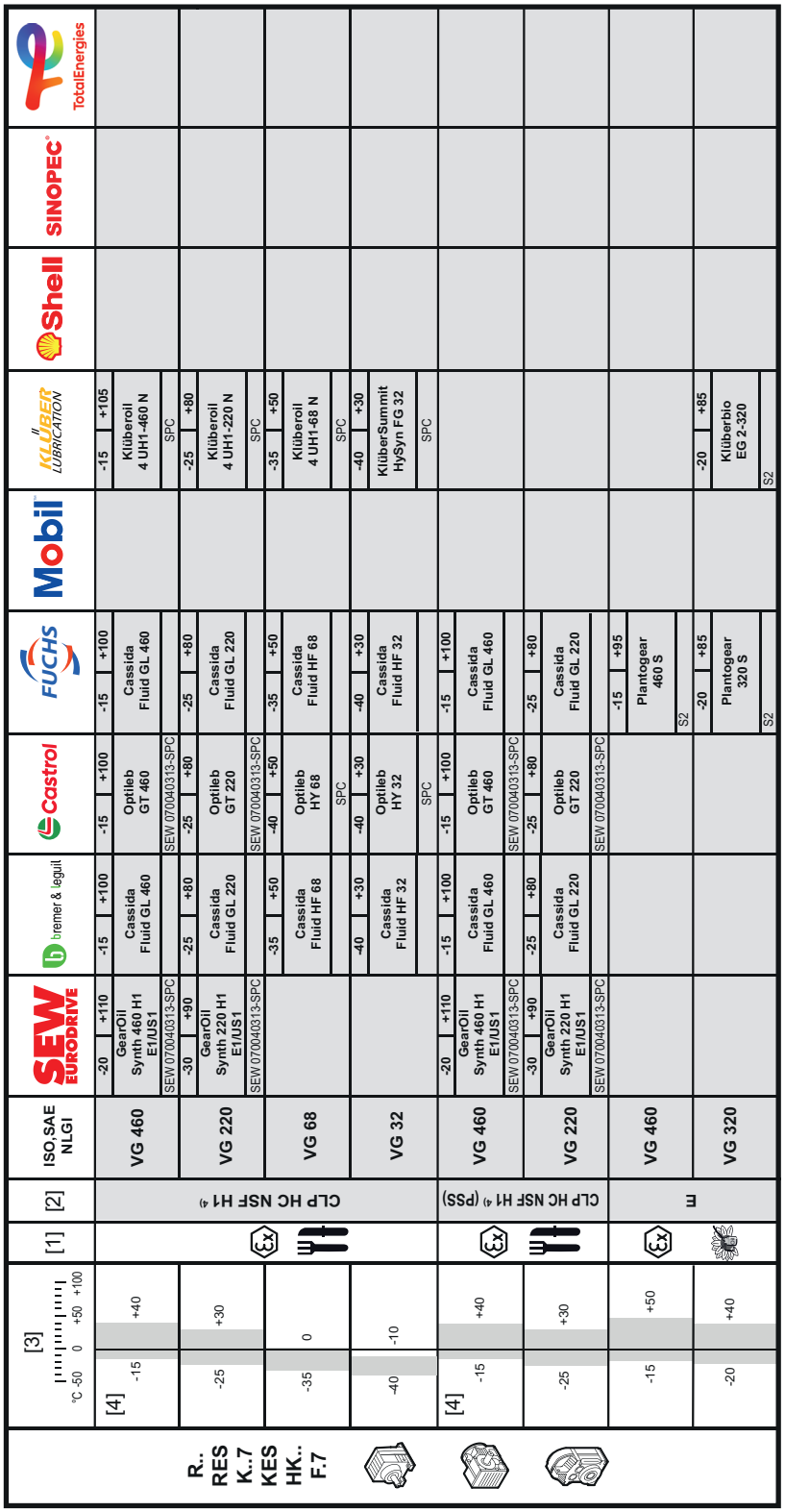

[1] Note on special approvals
[2] Oil type
[3] Ambient temperature range
[4] Standard

Lubricant table for K..9 gear units

The lubricant table is valid on the day this document is published. Refer to **www.sew-eurodrive.de/lubricants** for the latest tables.

Observe the thermal application limit of the oil seal materials under "Lubricant compatibility with oil seals" (▸ 42).

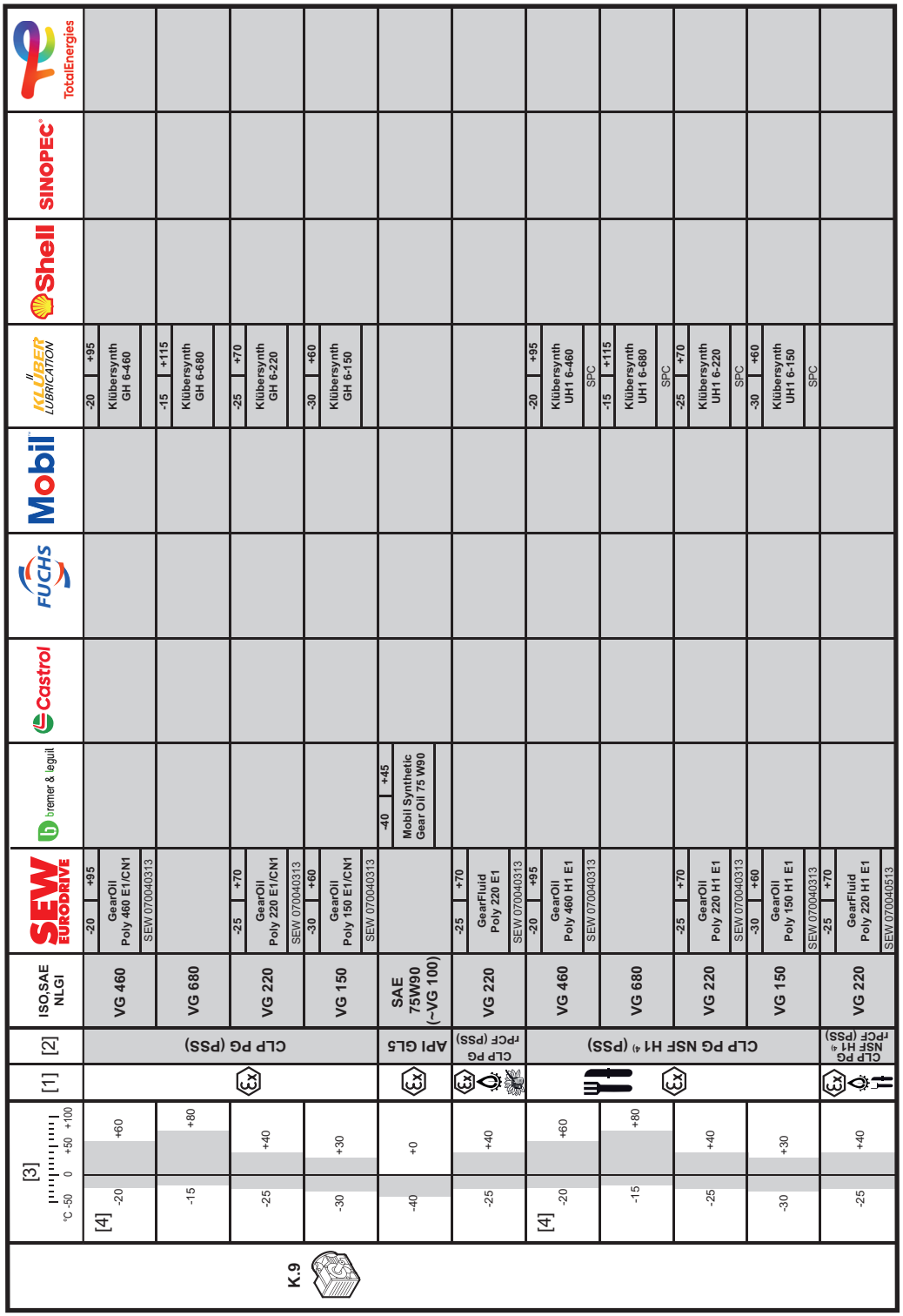

[1] Note on special approvals
[2] Oil type
[3] Ambient temperature range
[4] Standard

Lubricant table for S.. gear units

The lubricant table is valid on the day this document is published. Refer to **www.sew-eurodrive.de/lubricants** for the latest tables.

Observe the thermal application limit of the oil seal materials under "Lubricant compatibility with oil seals" (▶ 42).



[1] Note on special approvals
[2] Oil type
[3] Ambient temperature range
[4] Standard

The lubricant table is valid on the day this document is published. Refer to **www.sew-eurodrive.de/lubricants** for the latest tables.

Observe the thermal application limit of the oil seal materials under "Lubricant compatibility with oil seals" (▸ 42).

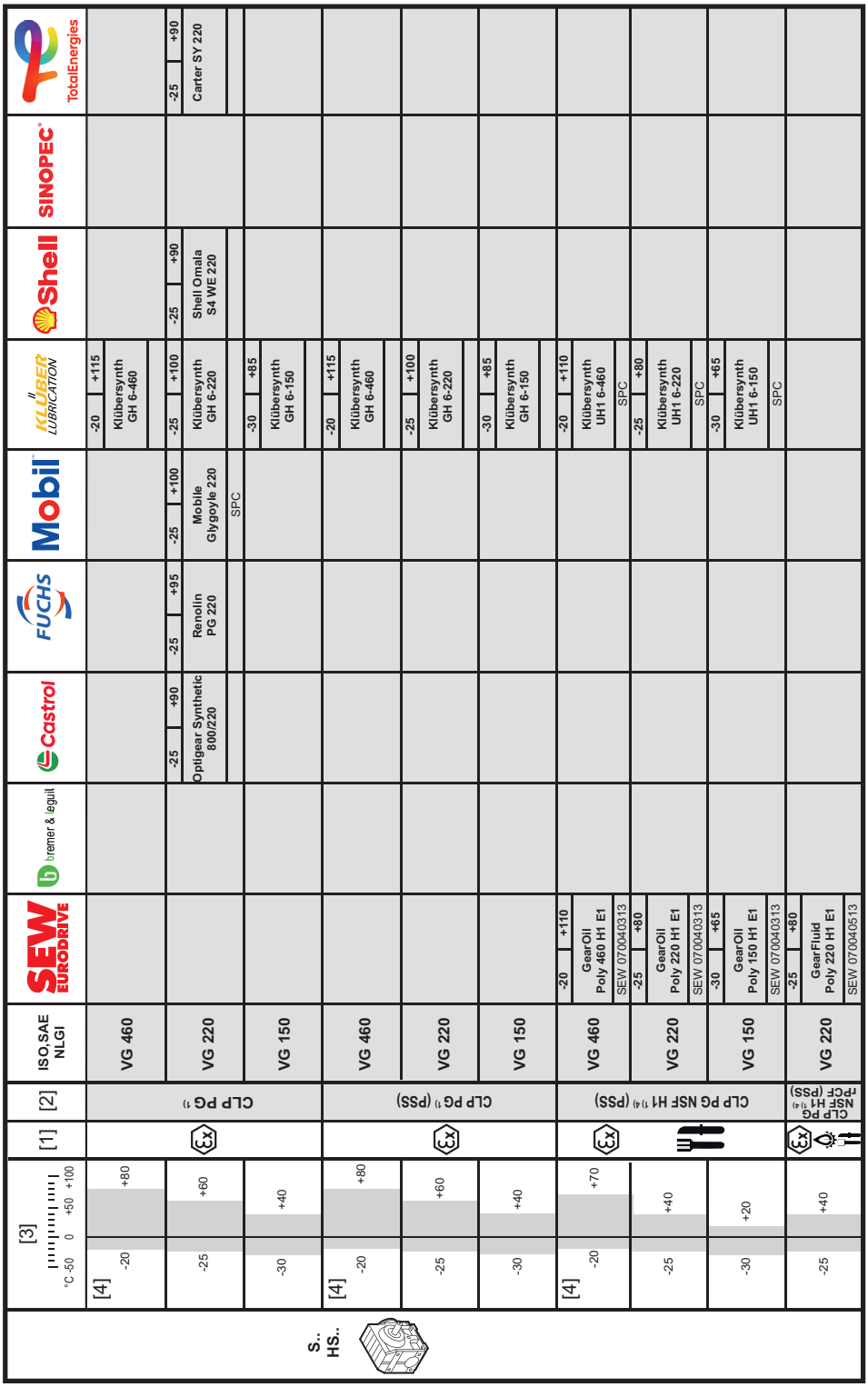

[1] Note on special approvals
[2] Oil type
[3] Ambient temperature range
[4] Standard

The lubricant table is valid on the day this document is published. Refer to **www.sew-eurodrive.de/lubricants** for the latest tables.

Observe the thermal application limit of the oil seal materials under "Lubricant compatibility with oil seals" (▶ 42).

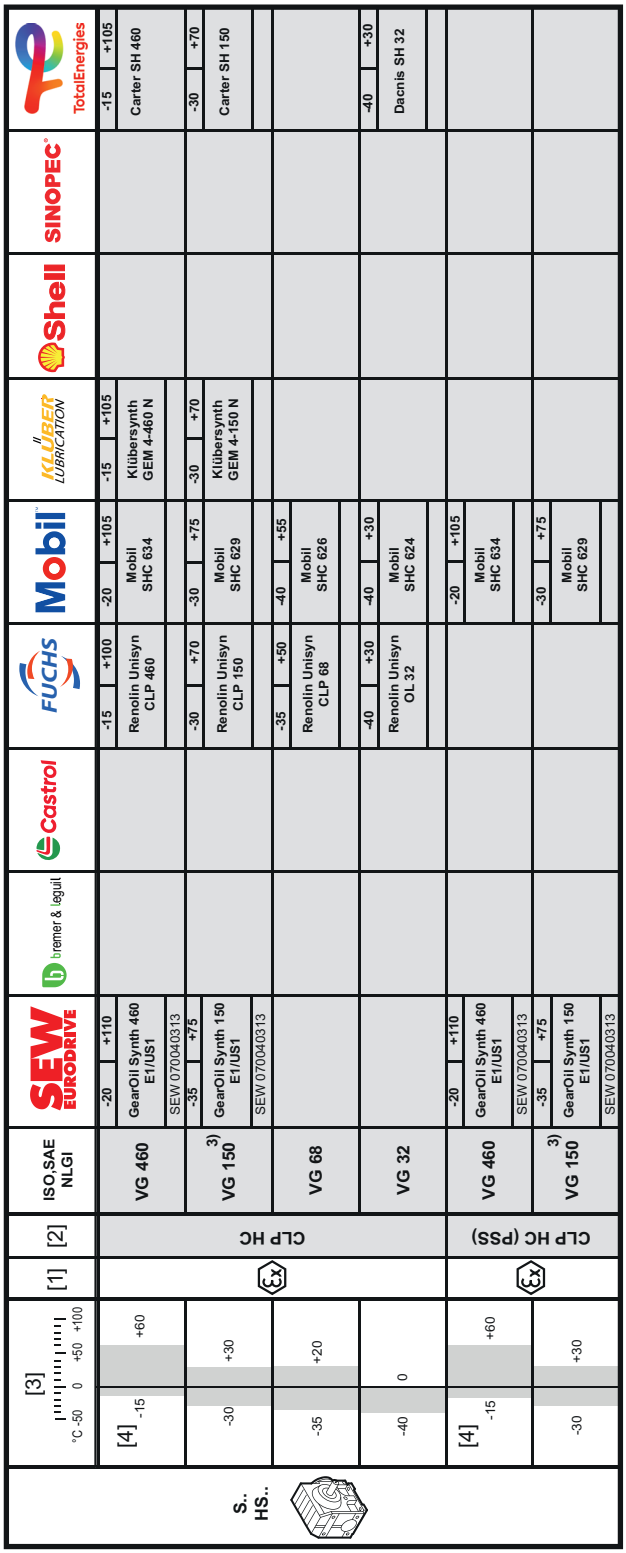

[1] Note on special approvals
[2] Oil type
[3] Ambient temperature range
[4] Standard

The lubricant table is valid on the day this document is published. Refer to **www.sew-eurodrive.de/lubricants** for the latest tables.

Observe the thermal application limit of the oil seal materials under "Lubricant compatibility with oil seals" (▸ 42).

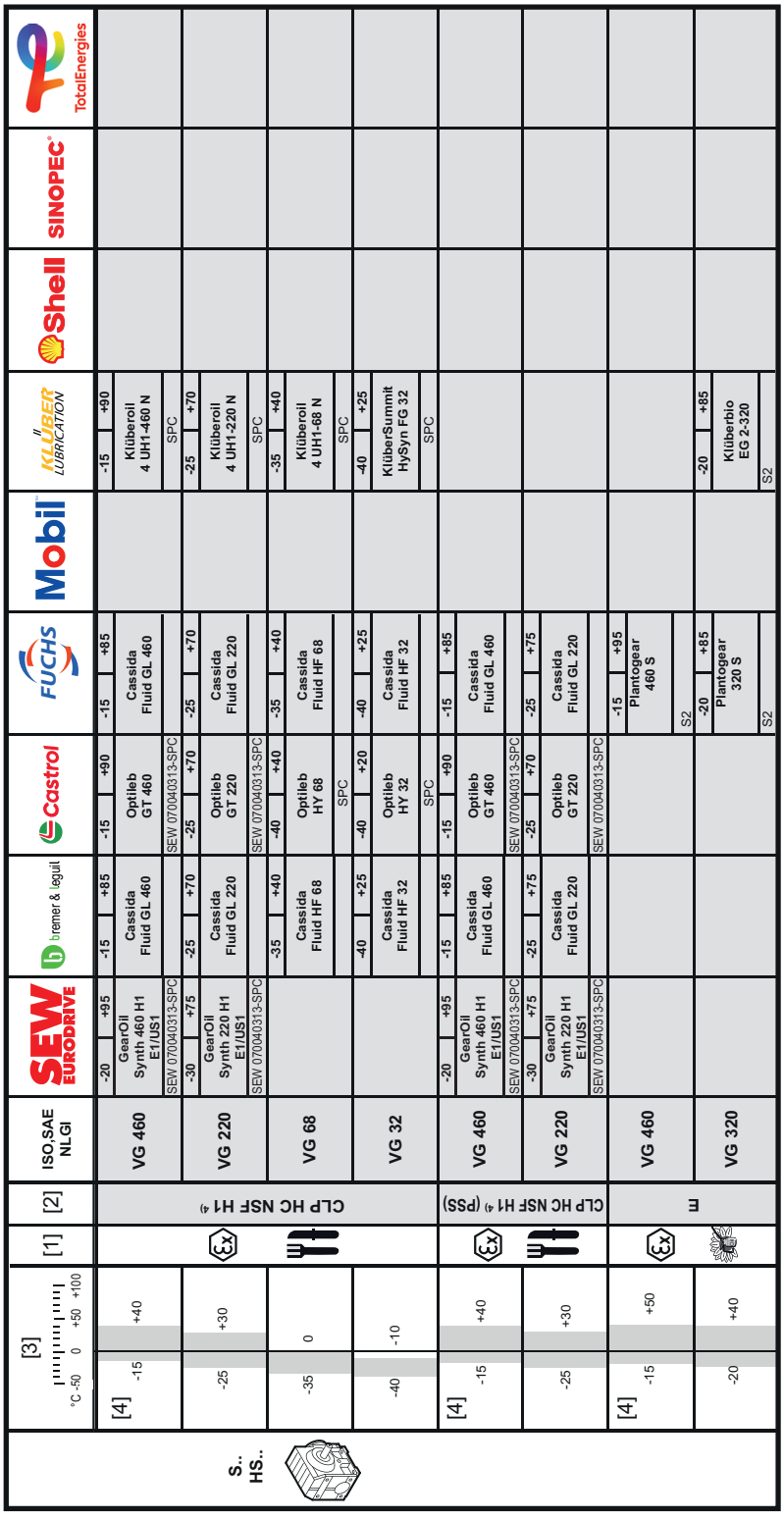

[1] Note on special approvals
[2] Oil type
[3] Ambient temperature range
[4] Standard

Lubricant table for W.. gear units

The lubricant table is valid on the day this document is published. Refer to **www.sew-eurodrive.de/lubricants** for the latest tables.

Observe the thermal application limit of the oil seal materials under "Lubricant compatibility with oil seals" (▶ 42).

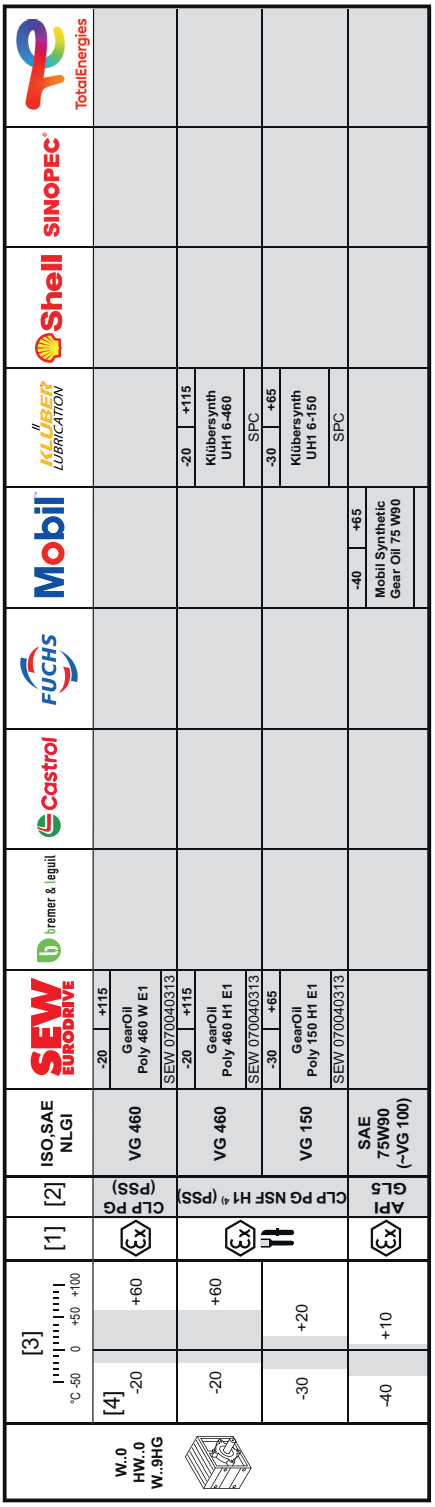

[1] Information about special approvals
[2] Oil type
[3] Ambient temperature range
[4] Standard

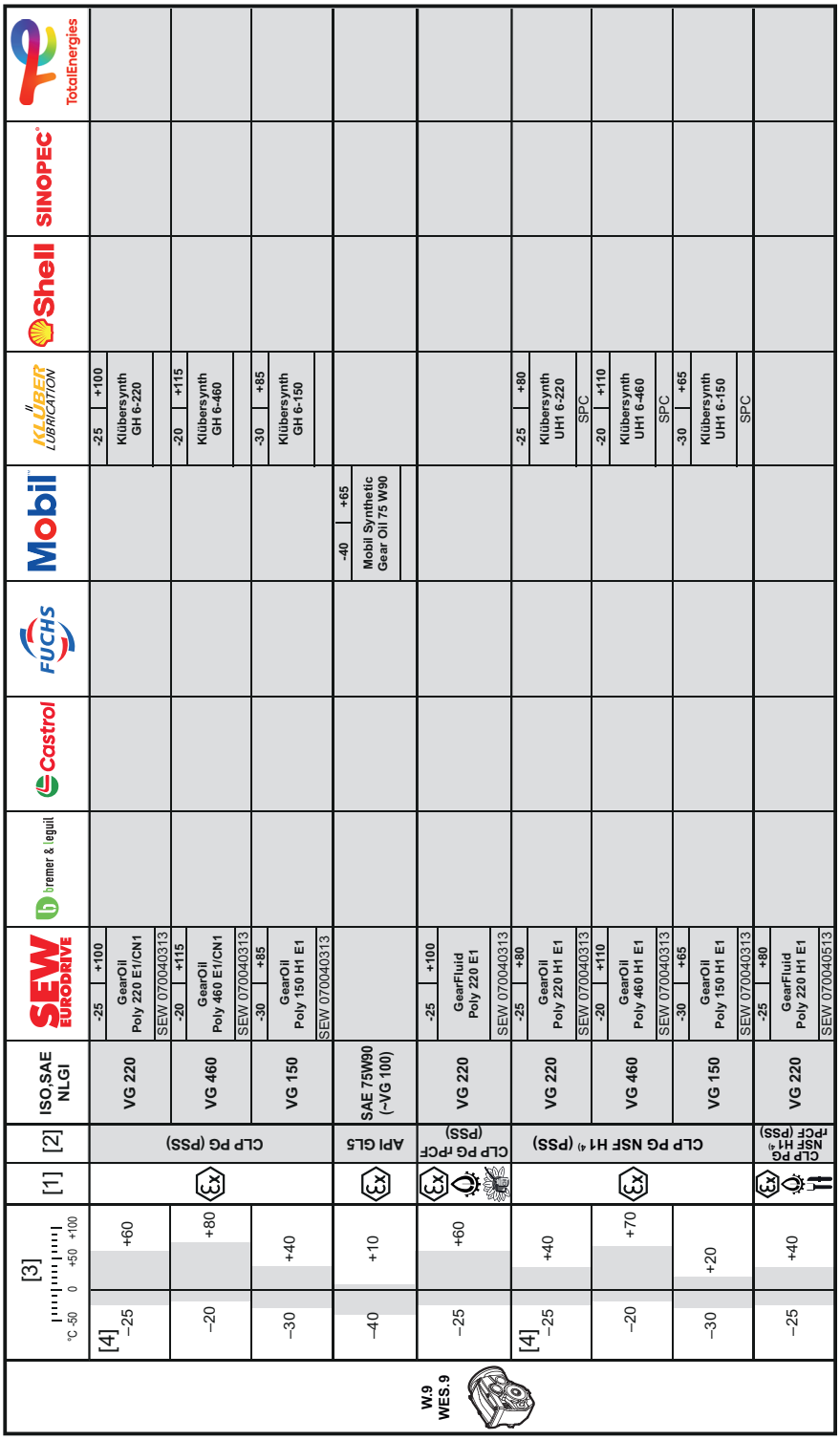

[1] Information about special approvals
[2] Oil type
[3] Ambient temperature range
[4] Standard

Lubricant fill quantities

Unless a special arrangement is made, SEW-EURODRIVE supplies the drives with a lubricant fill adapted for the specific mounting position. The decisive factor is the specification of the mounting position when ordering the drive.

When the mounting position is changed, the lubricant fill quantity must be adapted accordingly. Do not change the mounting position without prior consultation with SEW-EURODRIVE, otherwise the rights to claim under limited warranty become void.

You can find the lubricant fill quantity on the nameplate of the gear unit.

2.7.2 Gear unit venting

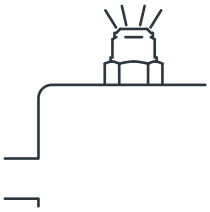

Gear unit breather valves are used for pressure compensation of closed gear unit systems. Dirt and dust in the environment may affect the function of the breather valves. Contact SEW-EURODRIVE regarding alternative venting systems.

2.7.3 Oil expansion tank

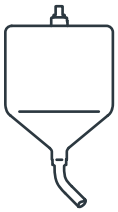

The oil fill level for gear units in mounting position M4 is set due to technical reasons. In case of unfavorable circumstances, oil may leak from the breather valve of these gear units. Use an oil expansion tank to reliably prevent oil from leaking. The oil expansion tank provides additional space for the lubricant to expand.

SEW-EURODRIVE recommends using an oil expansion tank for gear units and gearmotors in mounting position M4 in the following cases:

- For input speeds > 2000 min^{-1}
- For sizes 77 – 97 and input speeds > 1800 min^{-1}
- For gear units and gearmotors in size 107 and larger

The oil expansion tank is delivered as an assembly kit for mounting onto the gearmotor. In case of limited space or of gear units without motor, the oil expansion tank can also be mounted to nearby machine parts.

Transverse acceleration is not permitted for gear units with expansion tanks with fixed piping for third-party motors and for servomotors.

If you require further information, contact SEW-EURODRIVE.

2.7.4 Note on weight information

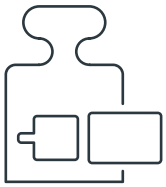

Note that the weight information shown in the catalogs only apply to the gear units and gearmotors without lubricant. The weights vary depending on the gear unit design and gear unit size. The lubricant fill depends on the mounting position, which is the reason that no universally applicable information can be provided. For the exact weight, refer to the quotation or the order confirmation.

2.7.5 Extended storage

Design

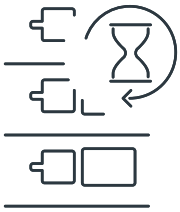

SEW-EURODRIVE recommends the "extended storage" gear unit design for storage periods longer than 9 months. A VCI anti-corrosion agent (**v**olatile **c**orrosion **i**nhibitors) is added to the lubricant of these gear units. Note that this VCI anti-corrosion agent is only effective within a temperature range of -25 °C to +50 °C. In addition, the flange contact surfaces and the shaft ends are coated with an anti-corrosion agent. As standard, the gear unit is equipped with OS1 surface protection for the "extended storage" option. On request, you can also order OS2, OS3 or OS4 instead of OS1.

The gear units come with the oil fill according to the specified mounting position (M1 – M6). To prevent the VCI anti-corrosion agent from evaporating, the gear units in "extended storage" design must remain tightly sealed until startup.

For W..0 SPIROPLAN® right-angle gear units, the extended storage option is not available.

Long-term storage in combination with food-grade lubricants (NSF-H1) is not permitted.

Storage conditions for extended storage

Observe the storage conditions specified in the following table for extended storage.

Climate zone	Packaging[1]	Storage[2]	Storage period
Temperate (Europe, USA, Canada, China and Russia except for tropical areas)	▪ Packed in containers ▪ With desiccant and moisture indicator sealed in the plastic wrap	▪ Roofed ▪ Protected against rain and snow ▪ Vibration-free	Up to 4 years with regular inspection of the packaging and humidity indicator (rel. humidity < 50%)
	open	▪ Roofed and enclosed at constant temperature and atmospheric humidity (5 °C < ϑ < 50 °C, relative humidity < 50%) ▪ No sudden temperature variations ▪ Controlled ventilation with filter (free from dust and dirt) ▪ No aggressive vapors ▪ No shocks	2 years or more with regular inspections ▪ Check for cleanliness and mechanical damage during the inspection. ▪ Check that the corrosion protection is intact.

Climate zone	Packaging[1]	Storage[2]	Storage period
Tropical (Asia, Africa, Central and South America, Australia, New Zealand except for temperate regions)	▪ Packed in containers ▪ With desiccant and moisture indicator sealed in the plastic wrap ▪ Protected against insect damage and mildew by chemical treatment	▪ Roofed ▪ Protected against rain and snow ▪ Vibration-free	Up to 3 years with regular inspection of the packaging and humidity indicator (rel. humidity < 50%)
	open	▪ Roofed and enclosed at constant temperature and atmospheric humidity (5 °C < ϑ < 50 °C, relative humidity < 50%) ▪ No sudden temperature variations ▪ Controlled ventilation with filter (free from dust and dirt) ▪ No aggressive vapors ▪ No shocks ▪ Protected against insect damage	2 years or more with regular inspections ▪ Check for cleanliness and mechanical damage during the inspection. ▪ Check that the corrosion protection is intact.

1 Packaging must be carried out by an experienced company using packaging material specifically suited for the application.
2 SEW-EURODRIVE recommends storing the gear units according to the mounting position.

2.7.6 Gear unit mounting

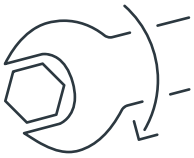

Strength class of the screws

Always mount gearmotors using screws of strength class 8.8.

The gearmotors in flange-mounted design and in foot/flange-mounted design listed in the following table are an exception. For these gearmotors, use screws of strength class 10.9. Use suitable washers.

Gear units with screws of strength class 10.9	Flange Ø mm
RF37/R37F SF37	120
RF47/R47F	140
RF57/R57F	160
SF67	200
FF/FAF77 KF/KAF77 SF77	250
FM/FAM67, FM/FAM77 KM/KAM67, KM/KAM77	300

Gear units with screws of strength class 10.9	Flange Ø mm
FM/FAM87 KM/KAM87 SF87	350
FM/FAM97 KM/KAM97	400
RF147 FM/FAM107 KM/KAM107	450
RF167 FM/FAM127 KM/KAM127	550
FM/FAM157 KM/KAM157	660
RZ37 – RZ87	60ZR – 130ZR

2.7.7 Torque arms

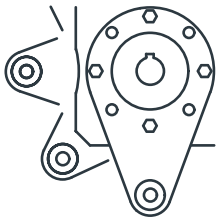

There is a risk of static overdetermination if gear units with foot housing (e.g. KA19/29B, KA127/157B or FA127/157B) are mounted both via the torque arm and the foot rail. Therefore, observe the following points:

- Simultaneous use of the foot rails and the torque arm is not permitted, especially for the KA.9B/T design.
- Attach the KA.9B/T design only via the torque arm.
- Attach the K.9 or KA.9B design only via the foot rail.
- If you use feet **and** torque arm for mounting, please contact SEW-EURODRIVE.
- Always install torque arms on the output side.

Standard torque arms

The following table lists the part numbers of all galvanized steel or gray cast iron torque arms available for shipment:

Gear unit	Size			
	19	29	39	49
KA, KH, KT	10684115	10684107	10682279	06442439

Gear unit	Size					
	27	37	47	57	67	77
KA, KH, KV, KT	–	6434258	6434282	6434312	6434312	6434347
SA, SH, ST	–	1269941	6442374	6442404	6442439	6442463

Gear unit	Size					
	27	37	47	57	67	77
FA, FH, FV, FT Rubber buffer (2 pieces)	0133485	0133485	0133485	0133485	0133485	0133493

Gear unit	Size				
	87	97	107	127	157
KA, KH, KV, KT	6434371	6434401	6434436	6432948	–
SA, SH, ST	6442498	6442528	–	–	–
FA, FH, FV, FT Rubber buffer (2 pieces)	0133493	0133507	0133507	0133515	0133477

Gear unit	Size		
	10	20	30
WA, WH, WT	10610219	01680730	1680110

Gear unit	Size				
	19	29	39	49	59
WA, WH, WT	01680730	10684115	10684107	29226015	29226430

Stainless steel torque arm

Torque arms made of stainless steel are available for K..19/29 gear units and SPIROPLAN® right-angle gear units. Suitable retaining screws made of stainless steel are included in the delivery in a bag.

Gear unit	Size	
	19	29
KA, KH, KT	10638008	10638016

Gear unit	Size			
	10	19	20	29
WA, WH, WT	10638024	10638032	10638032	10638008

Gear unit	Size			
	30	39	49	59
WA, WH, WT	10638040	10638016	18762611	18762638

Torque arms for KH167.., KH187..

As a standard, torque arms are not available for the gear units of sizes KH167.. and KH187.. Contact SEW-EURODRIVE if you need torque arms for these gear units.

Installing the torque arm at helical-bevel gear units and helical-worm gear units

When mounting the torque arm to a helical-bevel gear unit or helical-worm gear unit, it is important to ensure that it is carried out correctly, especially with regard to the stresses.

The following figure shows a secured bushing with a support on both sides.

The reamer bolt or screw must be held in a fork-like design without tensions. On the one hand, the bolt should have little radial clearance to the bushing to keep the impact load low during changeover, but large enough to prevent a distortion of the drive during standstill.

Avoid axial tension on the bushing, especially as this may cause tension on the drive.

Even self-designed torque arms should be fastened this way without tension.

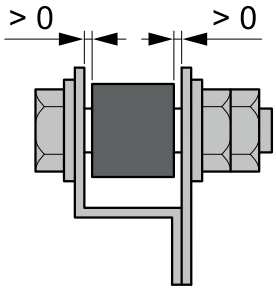

2.7.8 Gear units with hollow shafts

Chamfers on hollow shafts

The following figure illustrates the hollow shaft chamfers of gear units:

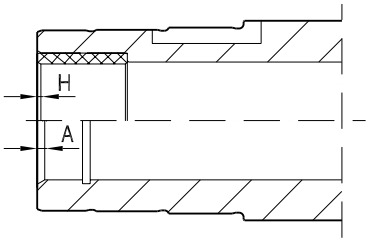

Dimension table for the chamfers of the F.., K.., S.., and W.. gear units:

Gear unit	Design	
	with hollow shaft (A)	with hollow shaft and shrink disk (H)
W..10	1.5 × 30°	–
W..19, W..20, W..30	2 × 30°	–
F..27	2 × 30°	0.5 × 45°
K..19, W..29	2 × 30°	0.5 × 45°
K..29, W..39	2 × 30°	0.5 × 45°

Gear unit	Design	
	with hollow shaft (A)	with hollow shaft and shrink disk (H)
F../K../S..37	2 × 30°	0.5 × 45°
K..39, W..49	2 × 30°	0.5 × 45°
F../K../S..47	2 × 30°	0.5 × 45°
K..49, W..59	2 × 30°	0.5 × 45°
S..57	2 × 30°	0.5 × 45°
F../K..57	2 × 30°	0.5 × 45°
F../K../S..67	2 × 30°	0.5 × 45°
F../K../S..77	2 × 30°	0.5 × 45°
F../K../S..87	3 × 30°	0.5 × 45°
F../K../S..97	3 × 30°	0.5 × 45°
F../K..107	3 × 30°	0.5 × 45°
F../K..127	5 × 30°	0.5 × 45°
F../K..157	5 × 30°	0.5 × 45°
KH167	–	0.5 × 45°
KH187	–	0.5 × 45°

Special motor-gear unit combinations

Note the following for parallel-shaft helical gearmotors with hollow shaft (FA..B, FV..B, FH..B, FAF, FVF, FHF, FA, FV, FH, FT, FAZ, FVZ, FHZ):

- If you use a customer shaft plugged through to the motor side, collisions may occur with the combination of "small gear unit" and "large motor".
- To determine whether there is a collision when the customer shaft is plugged through, observe the motor dimension AC.

Assembly/disassembly of gear units with hollow shaft and key

Use the supplied NOCO-Paste for mounting. This avoids contact corrosion and facilitates subsequent disassembly.

The key dimension L12 is specified for the customer and depends on the application requirements and the used materials. See the following figure "Customer shaft with contact shoulder [A] and without contact shoulder [B].

When dimensioning the keyed connection, take into account that the hollow shaft of the gear unit (hub) is made of the material C45R (1.1201).

SEW-EURODRIVE recommends **2 variants for mounting** for gear units with hollow shaft and key onto the input shaft of the driven machine (= customer shaft):

- Mounting using supplied fastening parts
- Mounting/dismounting using the optional assembly/disassembly kit

These two variants are described below.

Assembly using supplied fastening parts

The following fastening parts are provided as standard:

- Retaining screw with washer [2]
- Retaining ring [3]

Note the following information concerning the customer shaft:

- The installation length of the customer shaft with contact shoulder [A] must be "L8" - 1 mm.
- The installation length of the customer shaft without contact shoulder [B] must equal "L8".

The following figure shows the customer shaft with contact shoulder [A] and without contact shoulder [B].

00 001 03 02

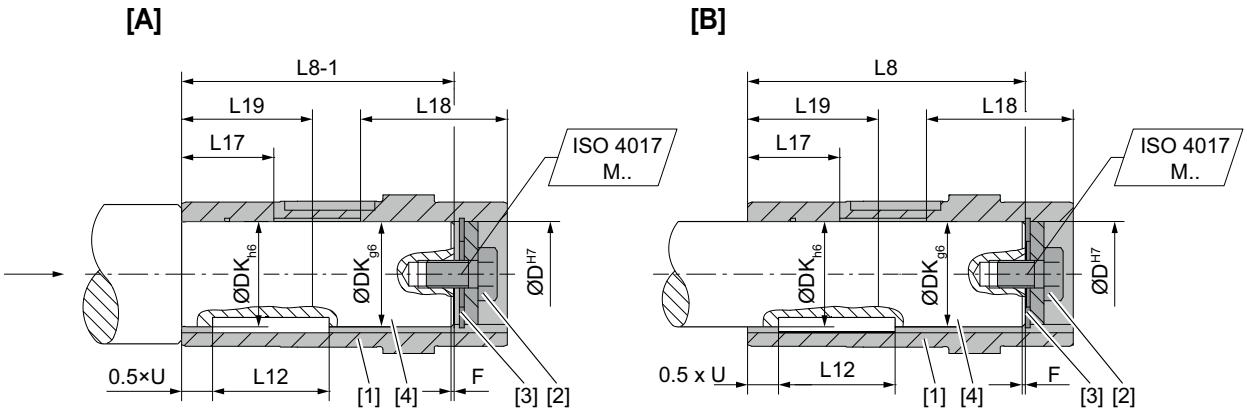

D	Hollow shaft diameter
DK	Customer shaft diameter
F	Shaft end chamfer
L8	Length of the customer shaft without contact shoulder

L8-1	Length of the customer shaft with contact shoulder = "L8" - 1 mm
L12	Key length
L17	Cylinder section length with dimension H7
L18	Cylinder section length with dimension H7
L19	Depending on the insertion side of the customer shaft, the dimension L19 should be > L17 or > L18.
U	Key width
[1]	Hollow shaft
[2]	Retaining screw with washer
[3]	Retaining ring
[4]	Customer shaft

Dimensions and tightening torques MS for the retaining screw [2] for the standard gear units:

Gear unit type	D^{H7}	DK	F	L8	L17	L18	rev	MS	ISO 4017
	mm	mm	mm	mm	mm	mm	mm	Nm	M..
FA..27	25		1	89	30	30	8	20	M10 × 25
FA..37, KA..37	30		1	105	39	45	8	20	M10 × 25
FA..47, KA..47	35		1	132	45	52	10	20	M12 × 30
FA..57, KA..57	40		1	142	50	60	12	40	M16 × 40
FA..67, KA..67	40		1	156	50	60	12	40	M16 × 40
FA..77, KA..77	50		1	183	65	75	14	40	M16 × 45
FA..87, KA..87	60		1	210	75	90	18	80	M20 × 50
FA..97, KA..97	70		2	270	90	105	20	80	M20 × 50
FA..107, KA..107	90		2	313	110	125	25	200	M24 × 60
FA..127, KA..127	100		2	373	120	150	28	200	M24 × 60
FA..157, KA..157	120		2	460	180	180	32	200	M24 × 60
FAM77, KAM77	50		1	309	65	75	14	40	M16 × 45
FAM67, KAM67	40		1	278	50	60	12	40	M16 × 40
FAM87, KAM87	60		1	363	75	90	18	80	M20 × 50
FAM97, KAM97	70		2	422	90	105	20	80	M20 × 50
FAM107, KAM107	90		2	473	110	125	25	200	M24 × 60
FAM127, KAM127	100		2	553	120	150	28	200	M24 × 60
FAM157, KAM157	120		2	691	180	180	32	200	M24 × 60
KA..19	20		1	92	28	30	6	8	M6 × 16
KA..29	25		1	107	30	38	8	20	M10 × 25
KA..39	30		1	137	35	45	8	20	M10 × 25
KA..39	35		1	137	35	45	10	20	M12 × 30
KA..49	35		1	160	35	45	10	20	M12 × 30
KA..49	40		1	154	35	45	12	40	M16 × 40
SA..37	20		1	104	40	40	6	8	M6 × 16
SA..47	30		1	105	39	45	8	20	M10 × 25
SA..47	25		1	105	38	38	8	20	M10 × 25
SA..57	30		1	132	39	45	8	20	M10 × 25
SA..57	35		1	132	45	52	10	20	M12 × 30

Gear unit type	D^{H7}	DK	F	L8	L17	L18	rev	MS	ISO 4017
	mm	mm	mm	mm	mm	mm	mm	Nm	M..
SA..67	45		1	144	50	60	14	40	M16 × 40
SA..67	40		1	144	50	60	12	40	M16 × 40
SA..77	50		1	180	63	75	14	40	M16 × 45
SA..77	60		1	180	72	90	18	80	M20 × 50
SA..87	60		1	220	75	90	18	80	M20 × 50
SA..87	70		2	220	90	105	20	80	M20 × 50
SA..97	70		2	260	90	105	20	80	M20 × 50
SA..97	90		2	255	110	125	25	200	M24 × 60
WA..10	16		0.5	69	24	24	5	8	M5 × 12
WA..19	18		1	84	27	27	6	8	M6 × 16
WA..19	20		1	84	26	30	6	8	M6 × 16
WA..20	18		1	84	24	27	6	8	M6 × 16
WA..29	20		1	92	28	30	6	8	M6 × 16
WA..29	25		1	92	28	30	8	20	M10 × 25
WA..29	30		1	92	28	30	8	20	M10 × 25
WA..30	20		1	105	30	30	6	8	M6 × 16
WA..39	25		1	107	30	38	8	20	M10 × 25
WA..39	30		1	107	30	38	8	20	M10 × 25
WA..49	30		1	137	35	45	8	20	M10 × 25
WA..49	35		1	137	35	45	10	20	M12 × 30
WA..59	35		1	160	35	45	10	20	M12 × 30
WA..59	40		1	154	35	45	12	40	M16 × 40

Assembly/disassembly using the optional assembly/disassembly kit

Assembly

You can also use the optional assembly/disassembly kit for mounting. The kit can be ordered for the respective gear unit types by quoting the part numbers in the table below. The scope of delivery includes:

- Spacer tube for installation without contact shoulder [5]
- Retaining screw for assembly [2]
- Forcing washer for disassembly [7]
- Fixed nut for disassembly [8]

The short retaining screw supplied as standard is not used.

Observe the following information regarding the customer shaft:

- The installation length of the customer shaft must be LK2. **Do not use the spacer tube if the customer shaft has a contact shoulder [A].**
- The installation length of the customer shaft must be LK2. **Use the spacer tube if the customer shaft does not have a contact shoulder [B].**

The following figure shows the customer shaft with contact shoulder [A] and without contact shoulder [B].

00 002 02 02

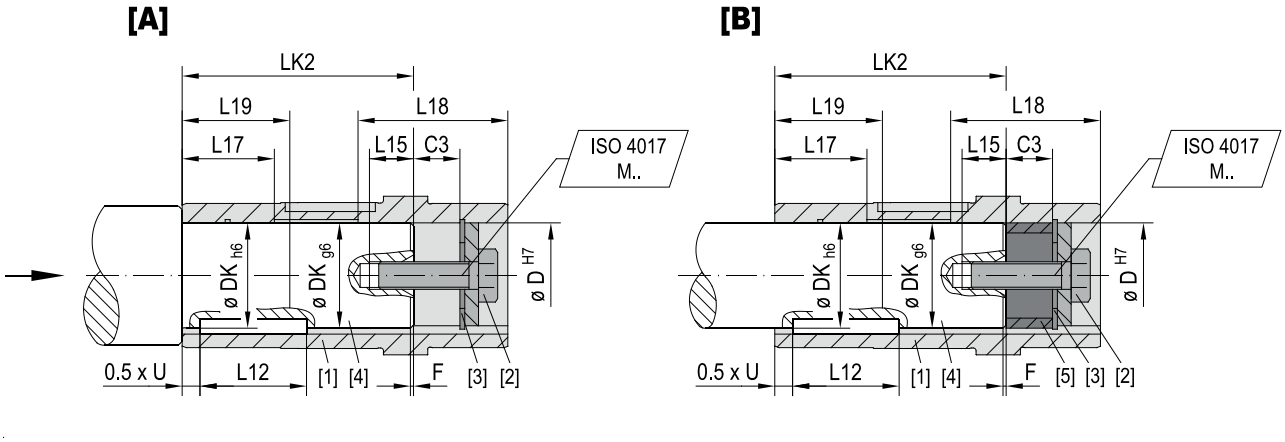

C3	Indentation for fixed nut and forcing washer
D	Hollow shaft diameter
DK	Customer shaft diameter
F	Shaft end chamfer
L12	Key length
L15	Thread depth of customer shaft
L17	Cylinder section length with dimension H7
L18	Cylinder section length with dimension H7
L19	Depending on the insertion side of the customer shaft, the dimension L19 should be > L17 or > L18.
LK2	Length of the customer shaft when using the optional assembly/disassembly kit
U	Key width
[1]	Hollow shaft
[2]	Retaining screw with washer
[3]	Retaining ring
[4]	Customer shaft
[5]	Spacer tube

Dimensions, tightening torque MS, and part numbers for retaining screw [2]:

Type	C3	D^{H7}	DK	F	L15	L17	L18	LK2	rev	MS	ISO 4017	Part number of assembly/disassembly kit
	mm	mm	mm	mm	mm	mm	mm	mm	mm	Nm	M..	
FA..27	16	25		1	22	30	30	73	8	20	M10 × 35	06436846
FA..37	16	30		1	22	39	45	89	8	20	M10 × 35	06436854
FA..47	18	35		1	28	45	52	114	10	20	M12 × 45	06436862
FA..57	18	40		1	36	50	60	124	12	40	M16 × 50	06436870
FA..67	18	40		1	36	50	60	138	12	40	M16 × 50	06436870
FA..77	18	50		1	36	65	75	165	14	40	M16 × 50	06436897
FA..87	22	60		1	42	75	90	188	18	80	M20 × 60	06436900
FA..97	22	70		2	42	90	105	248	20	80	M20 × 60	06436919
FA..107	26	90		2	50	110	125	287	25	200	M24 × 70	06436927
FA..127	26	100		2	50	120	150	347	28	200	M24 × 70	06436935
FA..157	26	120		2	50	180	180	434	32	200	M24 × 70	06436943
FAM67	18	40		1	36	50	60	260	12	40	M16 × 50	06436870
FAM77	18	50		1	36	65	75	291	14	40	M16 × 50	06436897
FAM87	22	60		1	42	75	90	341	18	80	M20 × 60	06436900
FAM97	22	70		2	42	90	105	400	20	80	M20 × 60	06436919
FAM107	26	90		2	50	110	125	447	25	200	M24 × 70	06436927
FAM127	26	100		2	50	120	150	527	28	200	M24 × 70	06436935
FAM157	26	120		2	50	180	180	665	32	200	M24 × 70	06436943
KA..19	12	20		1	16	28	30	80	6	8	M6 × 25	06436838
KA..29	16	25		1	22	30	38	91	8	20	M10 × 35	06436846
KA..29	16	30		1	22	35	35	91	8	20	M10 × 35	06436854
KA..37	16	30		1	22	39	45	89	8	20	M10 × 35	06436854
KA..39	16	30		1	22	35	45	121	8	20	M10 × 35	06436854
KA..39	18	35		1	28	35	45	119	10	20	M12 × 45	06436862
KA..47	18	35		1	28	45	52	114	10	20	M12 × 45	06436862
KA..49	18	35		1	28	35	45	142	10	20	M12 × 45	06436862
KA..49	18	40		1	36	35	45	136	12	40	M16 × 50	06436870
KA..57	18	40		1	36	50	60	124	12	40	M16 × 50	06436870
KA..67	18	40		1	36	50	60	138	12	40	M16 × 50	06436870
KA..77	18	50		1	36	65	75	165	14	40	M16 × 50	06436897
KA..87	22	60		1	42	75	90	188	18	80	M20 × 60	06436900
KA..97	22	70		2	42	90	105	248	20	80	M20 × 60	06436919
KA..107	26	90		2	50	110	125	287	25	200	M24 × 70	06436927
KA..127	26	100		2	50	120	150	347	28	200	M24 × 70	06436935
KA..157	26	120		2	50	180	180	434	32	200	M24 × 70	06436943
KAM67	18	40		1	36	50	60	260	12	40	M16 × 50	06436870
KAM77	18	50		1	36	65	75	291	14	40	M16 × 50	06436897

Type	C3	D^{H7}	DK	F	L15	L17	L18	LK2	rev	MS	ISO 4017	Part number of assembly/disassembly kit
	mm	mm	mm	mm	mm	mm	mm	mm	mm	Nm	M..	
KAM87	22	60		1	42	75	90	341	18	80	M20 × 60	06436900
KAM97	22	70		2	42	90	105	400	20	80	M20 × 60	06436919
KAM107	26	90		2	50	110	125	447	25	200	M24 × 70	06436927
KAM127	26	100		2	50	120	150	527	28	200	M24 × 70	06436935
KAM157	26	120		2	50	180	180	665	32	200	M24 × 70	06436943
SA..37	12	20		1	16	40	40	92	6	8	M6 × 25	06436838
SA..47	16	25		1	22	38	38	89	8	20	M10 × 35	06436846
SA..47	16	30		1	22	39	45	89	8	20	M10 × 35	06436854
SA..57	16	30		1	22	39	45	116	8	20	M10 × 35	06436854
SA..57	18	35		1	28	45	52	114	10	20	M12 × 45	06436862
SA..67	18	40		1	36	50	60	126	12	40	M16 × 50	06436870
SA..67	18	45		1	36	50	60	126	14	40	M16 × 50	06436889
SA..77	18	50		1	36	63	75	165	14	40	M16 × 50	06436897
SA..77	22	60		1	42	72	90	158	18	80	M20 × 60	06436900
SA..87	22	60		1	42	75	90	198	18	80	M20 × 60	06436900
SA..87	22	70		2	42	90	105	198	20	80	M20 × 60	06436919
SA..97	22	70		2	42	90	105	238	20	80	M20 × 60	06436919
SA..97	26	90		2	50	110	125	229	25	200	M24 × 70	06436927
WA..19	12	18		1	16	27	27	72	6	8	M6 × 25	0643682X
WA..19	12	20		1	16	26	30	72	6	8	M6 × 25	06436838
WA..29	12	20		1	16	28	30	80	6	8	M6 × 16	06436838
WA..29	16	25		1	22	28	30	76	8	20	M10 × 35	06436846
WA..29	16	30		1	22	28	30	76	8	20	M10 × 35	06436854
WA..39	16	25		1	22	30	38	91	8	20	M10 × 35	06436846
WA..39	16	30		1	22	35	35	91	8	20	M10 × 35	06436854
WA..49	16	30		1	22	35	45	121	8	20	M10 × 35	06436854
WA..49	18	35		1	28	35	45	119	10	20	M12 × 45	06436862
WA..59	18	35		1	28	35	45	142	10	20	M12 × 45	06436862
WA..59	18	40		1	36	35	45	136	12	40	M16 × 50	06436870

Disassembly

The assembly kit shown for mounting the customer shaft is a recommendation from SEW-EURODRIVE.

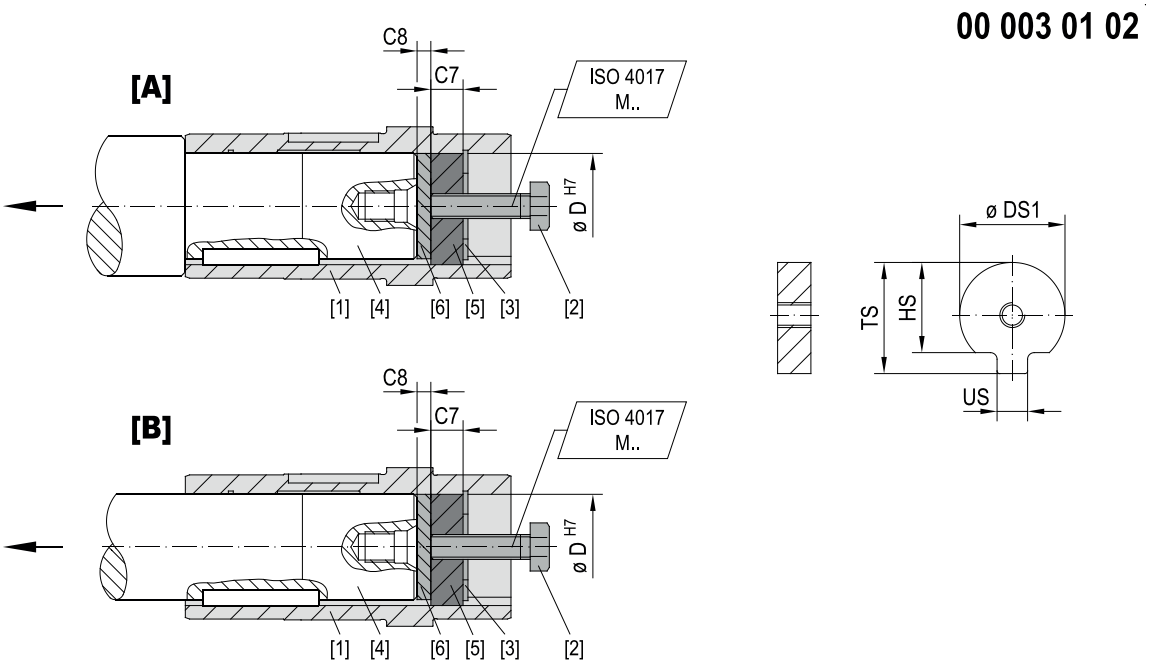

C7	Width of fixed nut
C8	Width of forcing washer
D	Hollow shaft diameter
DS1	Diameter of fixed nut
HS	Height 1 fixed nut
TS	Height 2 fixed nut
VS	Base width of fixed nut
[1]	Hollow shaft
[2]	Retaining screw
[3]	Retaining ring
[4]	Customer shaft
[7]	Fixed nut for disassembly
[8]	Forcing washer

Gear unit	D^{H7} mm	C8 mm	C7 mm	HS mm	US mm	TS mm	DS1 mm	ISO 4017 M..	Part number of assembly/disassembly kit
WA..10	16	5	5	12	4.5	18	15.7	M5 × 50	06437125
WA..19, WA..20	18	5	6	13.5	5.5	20.5	17.7	M6 × 25	0643682X
KA..19, SA..37,WA..19, WA..20,WA..29, WA..30	20	5	6	15.5	5.5	22.5	19.7	M6 × 25	06436838
FA..27, KA..29, SA..47,WA..29, WA..39	25	5	10	20	7.5	28	24.7	M10 × 35	06436846
FA..37, KA..29, KA..37, KA..39, SA..47, SA..57, WA..29, WA..39, WA..49	30	5	10	25	7.5	33	29.7	M10 × 35	06436854

Gear unit	D^{H7} mm	C8 mm	C7 mm	HS mm	US mm	TS mm	DS1 mm	ISO 4017 M..	Part number of assembly/disassembly kit
FA..47, KA..39, KA..47, KA..49, SA..57, WA..49, WA..59	35	5	12	29	9.5	38	34.7	M12 × 45	06436862
FA..57, KA..57, FA..67, KA..49, KA..67, SA..67, WA..59	40	5	12	34	11.5	41.9	39.7	M16 × 50	06436870
SA..67	45	5	12	38.5	13.5	48.5	44.7	M16 × 50	06436889
FA..77, KA..77, SA..77	50	5	12	43.5	13.5	53.5	49.7	M16 × 50	06436897
FA..87, KA..87, SA..77, SA..87	60	5	16	56	17.5	64	59.7	M20 × 60	06436900
FA..97, KA..97, SA..87, SA..97	70	5	16	65.5	19.5	74.5	69.7	M20 × 60	06436919
FA..107, KA..107, SA..97	90	5	20	80	24.5	95	89.7	M24 × 70	06436927
FA..127, KA..127	100	5	20	89	27.5	106	99.7	M24 × 70	06436935
FA..157, KA..157	120	5	20	107	31	127	119.7	M24 × 70	06436943

Shouldered hollow shaft option with shrink disk

The following gear units with hollow shaft and shrink disk can be supplied with a larger bore diameter D' as an option:

- Parallel-shaft helical gear units FH/FHF/FHZ37 – 157
- Helical-bevel gear units KH/KHF/KHZ37 – 157
- Helical-worm gear units SH/SHF47 – 97

As standard, D' = D.

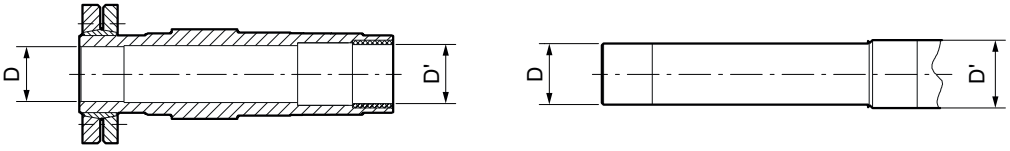

Gear unit	Bore diameter D/D' mm
FH/FHF/FHZ37, KH/KHF/KHZ37, SH/SHF/SHZ47	30/32
FH/FHF/FHZ47, KH/KHF/KHZ47, SH/SHF/SHZ57	35/36
FH/FHF/FHZ57, KH/KHF/KHZ57, SH/SHF/SHZ57	40/42
FH/FHF/FHZ67, KH/KHF/KHZ67, SH/SHF/SHZ67	40/42
FH/FHF/FHZ77, KH/KHF/KHZ77, SH/SHF/SHZ77	50/52
FH/FHF/FHZ87, KH/KHF/KHZ87, SH/SHF/SHZ87	65/66
FH/FHF/FHZ97, KH/KHF/KHZ97, SH/SHF/SHZ97	75/76
FH/FHF/FHZ107, KH/KHF/KHZ107	95/96

Gear unit	Bore diameter D/D' mm
FH/FHF/FHZ127, KH/KHF/KHZ127	105/106
FH/FHF/FHZ157, KH/KHF/KHZ157	125/126

Diameter D/D' must be specified when ordering gear units with a shouldered hollow shaft (optional bore diameter D').

Sample order

FH37 DRN80M4 with hollow shaft 30/32 mm

Parallel-shaft helical gear units with shouldered hollow shaft (dimensions in mm):

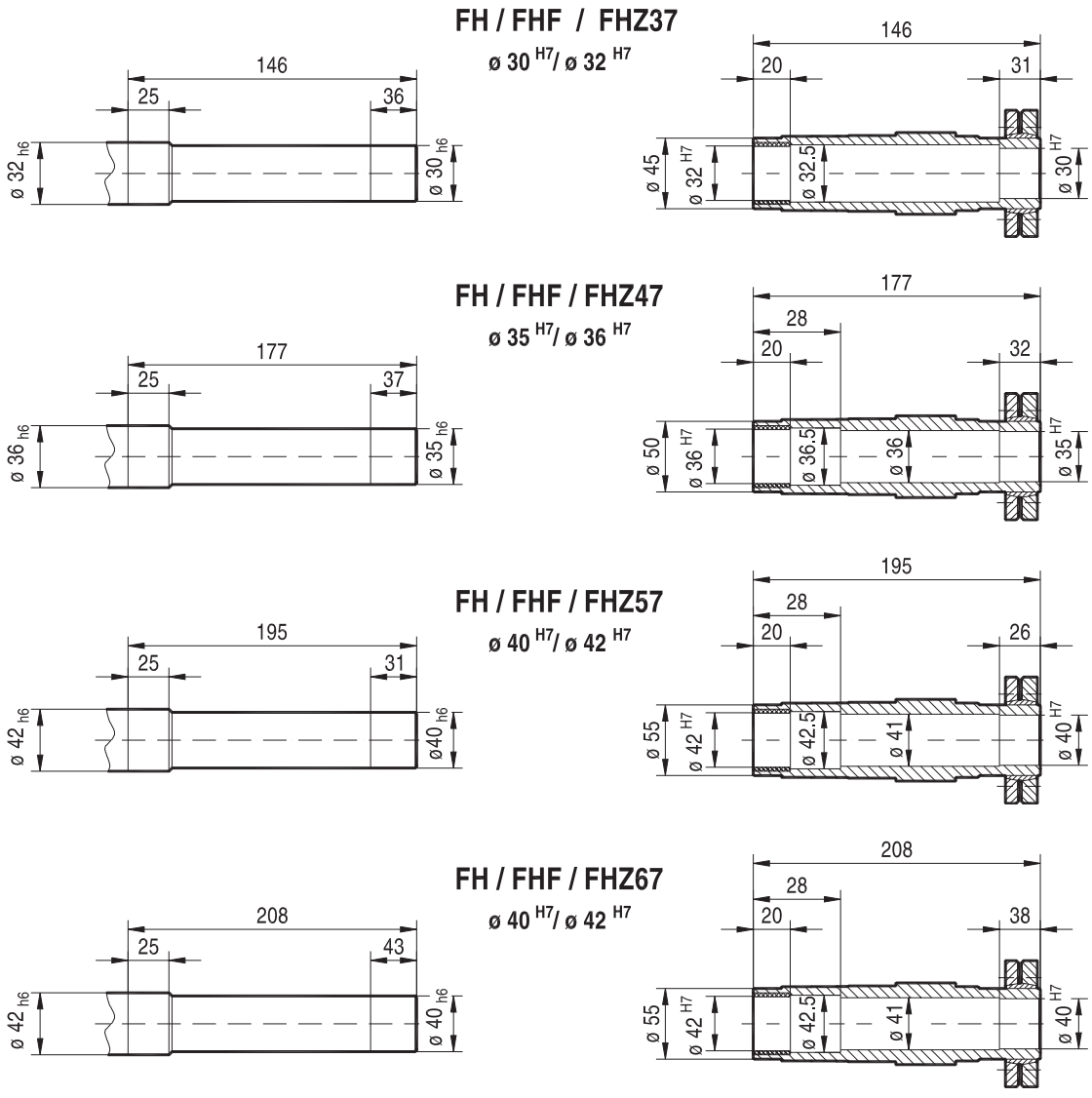

FH / FHF / FHZ77

ø 50 H7/ ø 52 H7

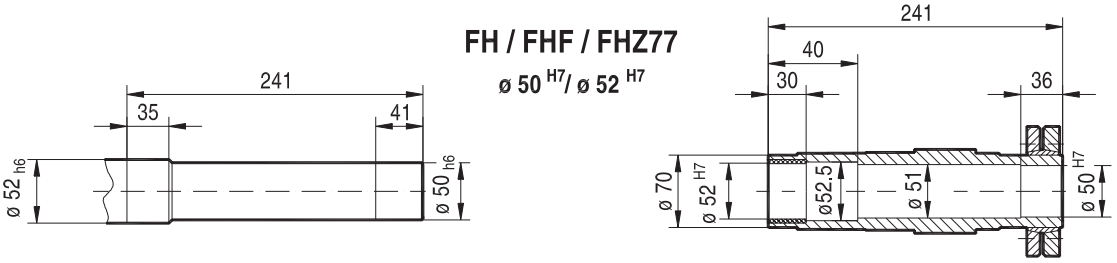

FH / FHF / FHZ87

ø 65 H7/ ø 66 H7

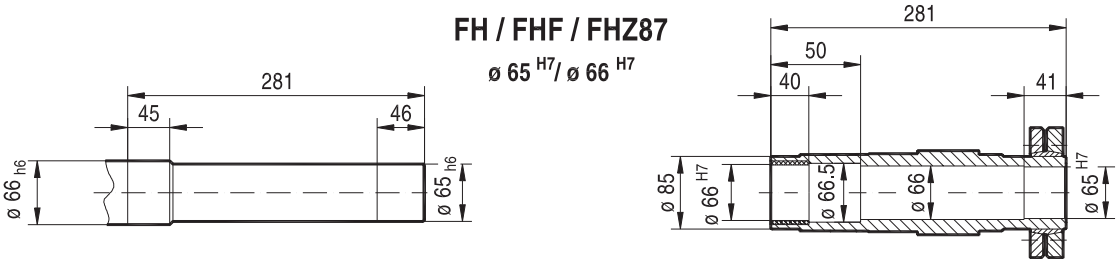

FH / FHF / FHZ97

ø 75 H7/ ø 76 H7

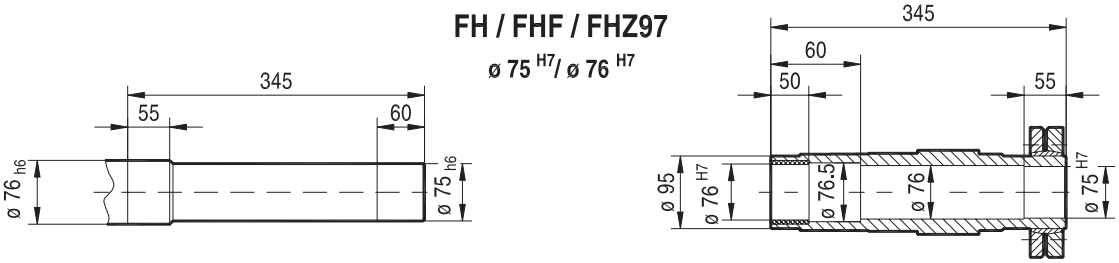

FH / FHF / FHZ107

ø 95 H7/ ø 96 H7

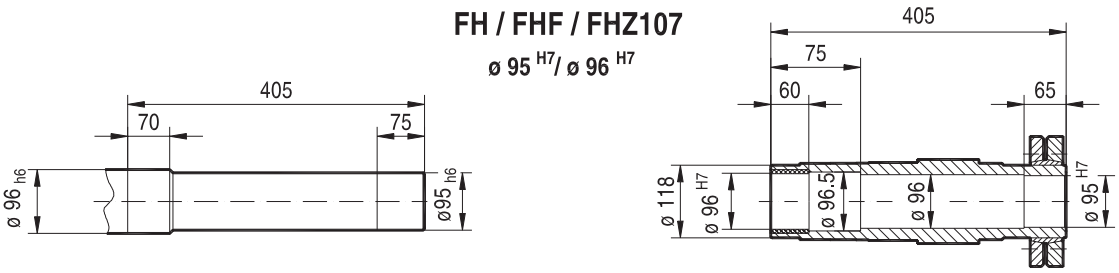

FH / FHF / FHZ127

ø 105 H7/ ø 106 H7

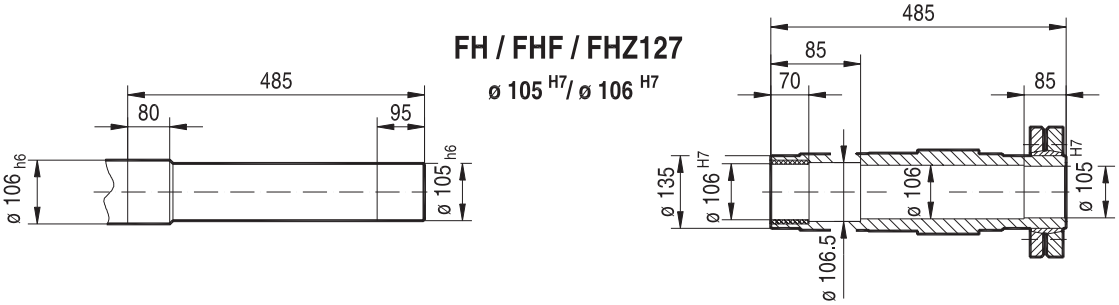

FH / FHF / FHZ157

ø 125 H7/ ø 126 H7

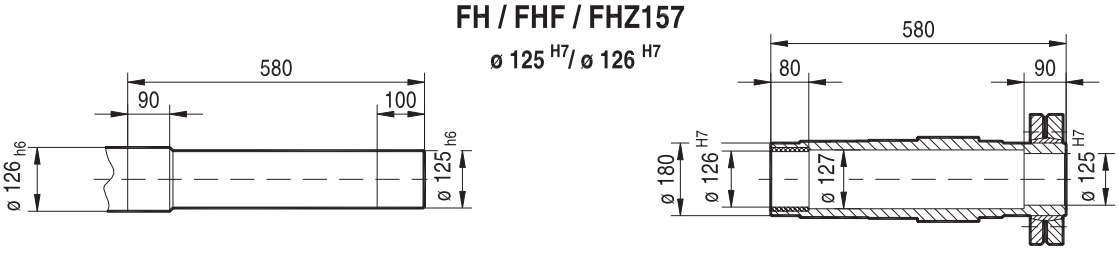

Helical-bevel gear units with shouldered hollow shaft (dimensions in mm):

KH / KHF / KHZ37

ø 30 H7/ ø 32 H7

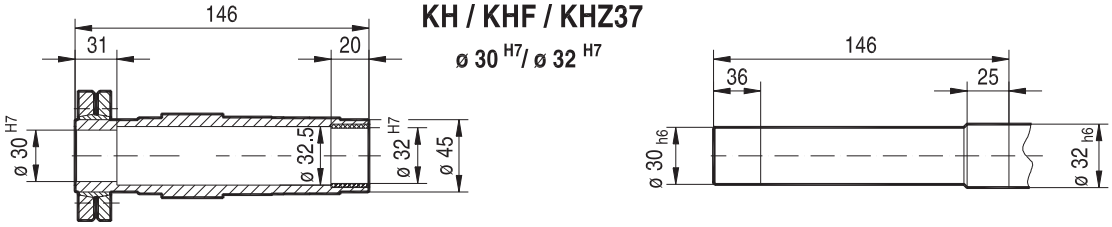

KH / KHF / KHZ47

ø 35 H7/ ø 36 H7

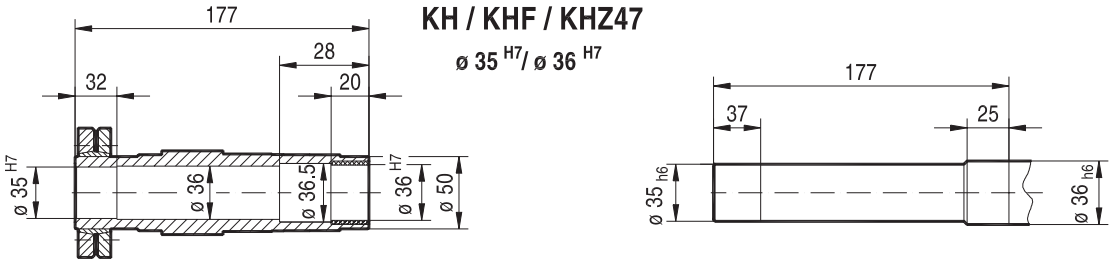

KH / KHF / KHZ57

ø 40 H7/ ø 42 H7

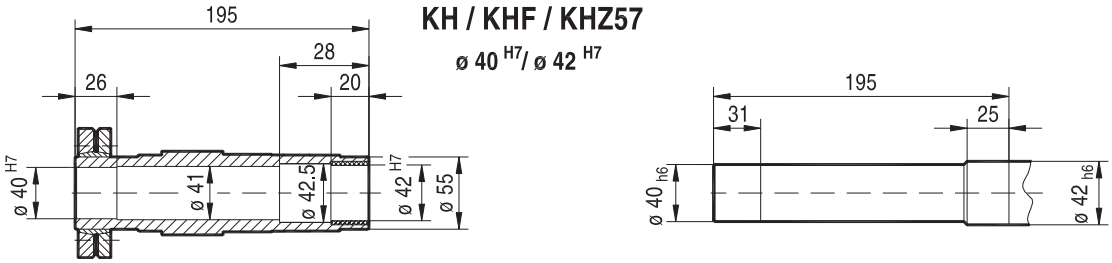

KH / KHF / KHZ67

ø 40 H7/ ø 42 H7

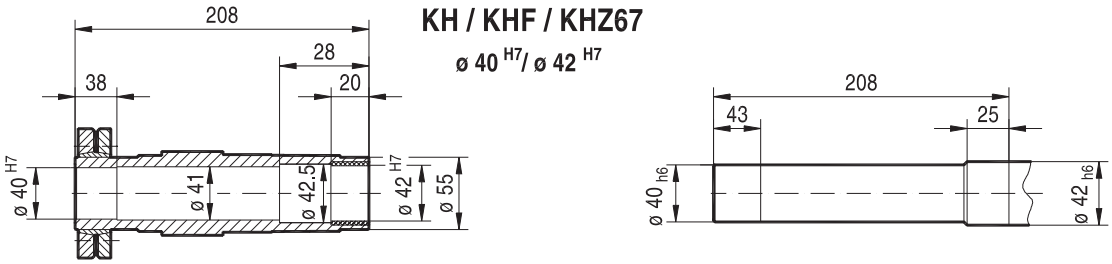

KH / KHF / KHZ77

ø 50 H7/ ø 52 H7

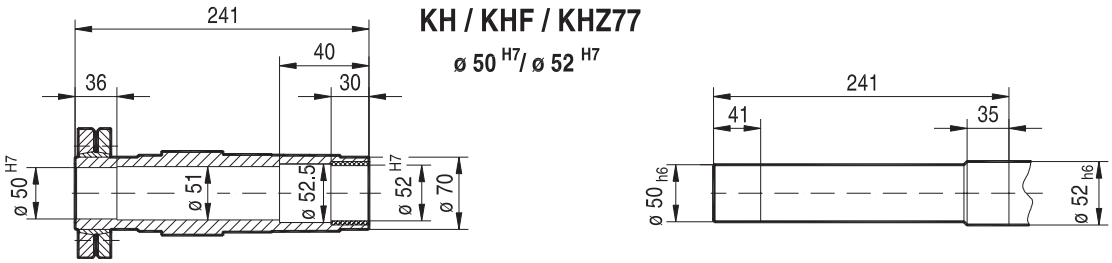

KH / KHF / KHZ87

ø 65 H7/ ø 66 H7

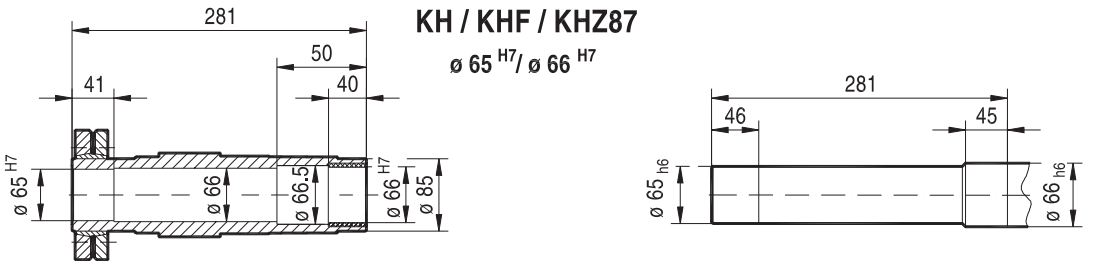

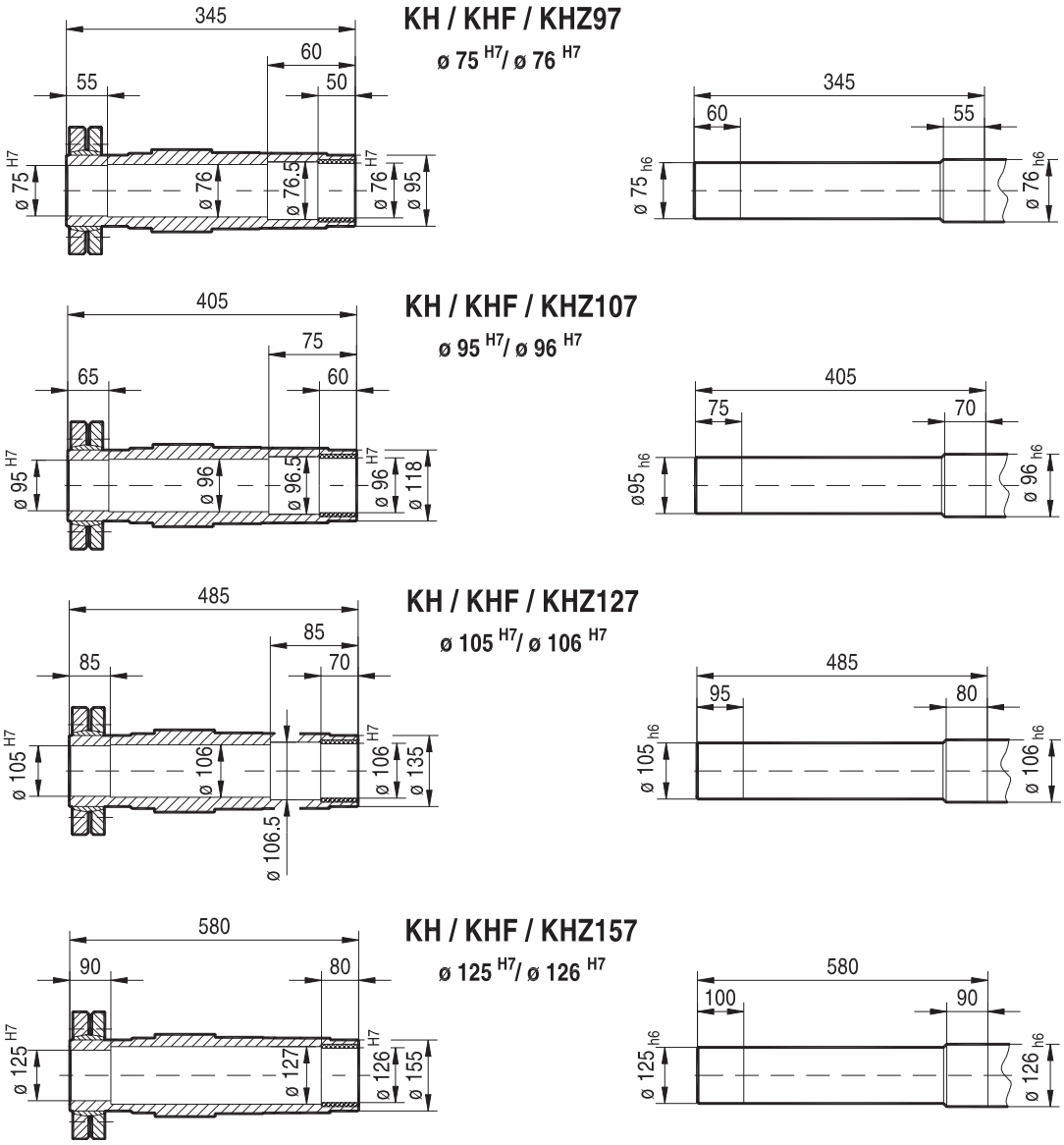

Helical-worm gear units with shouldered hollow shaft (dimensions in mm):

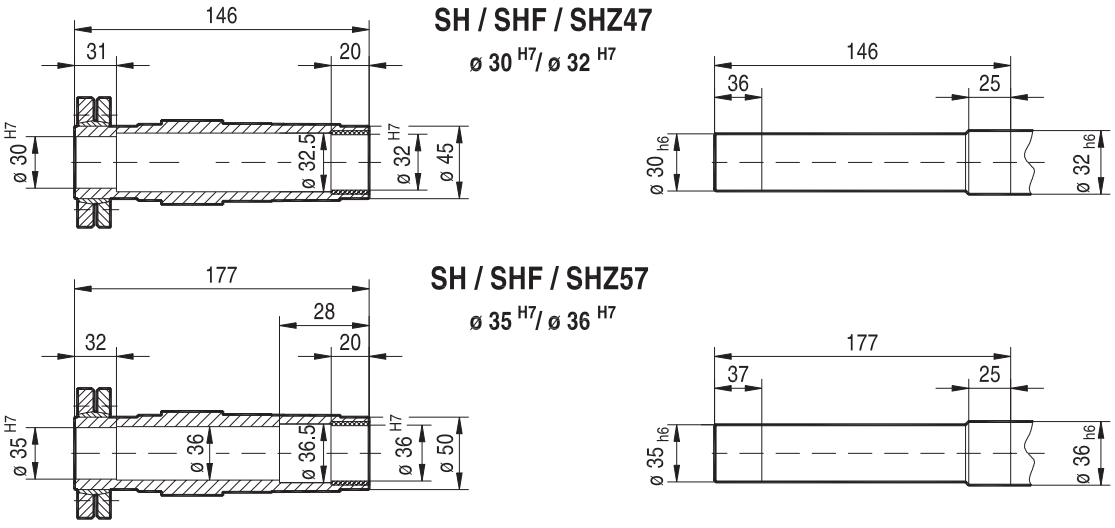

SH / SHF / SHZ67

ø 40 H7/ ø 42 H7

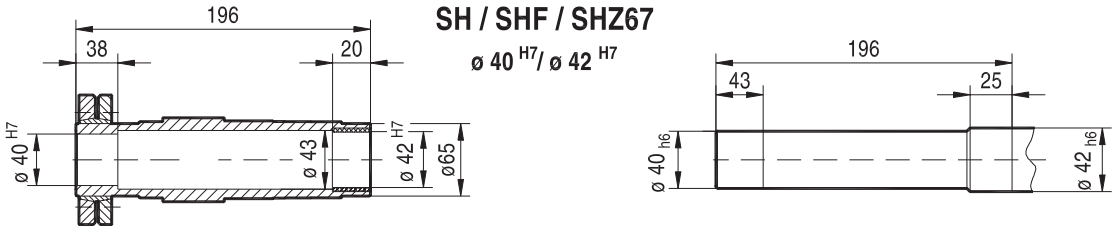

SH / SHF / SHZ77

ø 50 H7/ ø 52 H7

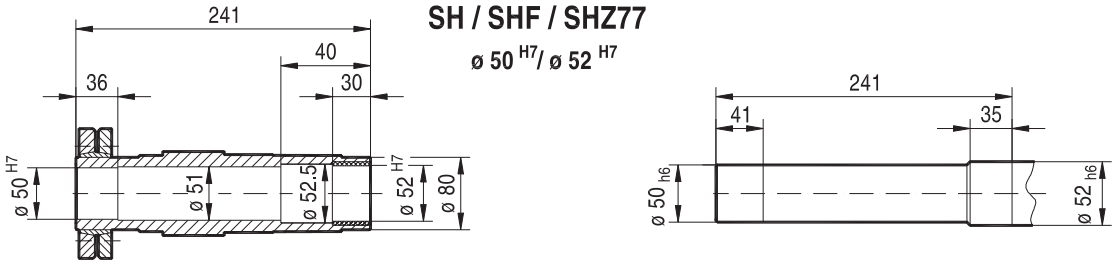

SH / SHF / SHZ87

ø 65 H7/ ø 66 H7

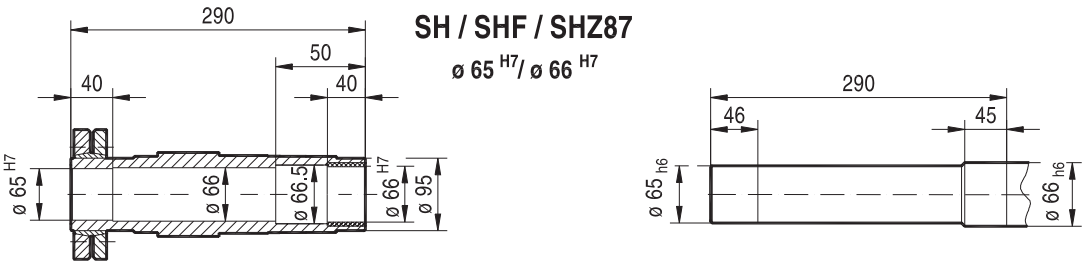

SH / SHF / SHZ97

ø 75 H7/ ø 76 H7

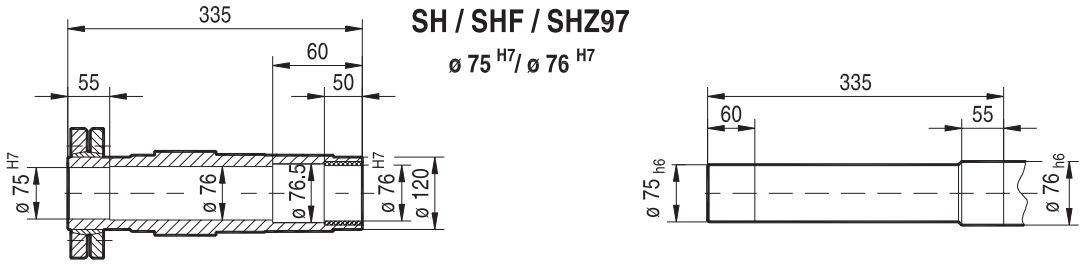

TorqLOC® mounting system for hollow shaft gear units

Description of the TorqLOC®

The TorqLOC® hollow shaft mounting system is used for achieving a non-positive connection between the customer shaft and the hollow shaft in the gear unit. This makes the TorqLOC® hollow shaft mounting system an alternative to the previous hollow shaft with shrink disk, hollow shaft with key, and splined hollow shaft.

The TorqLOC® hollow shaft mounting system consists of the following components:

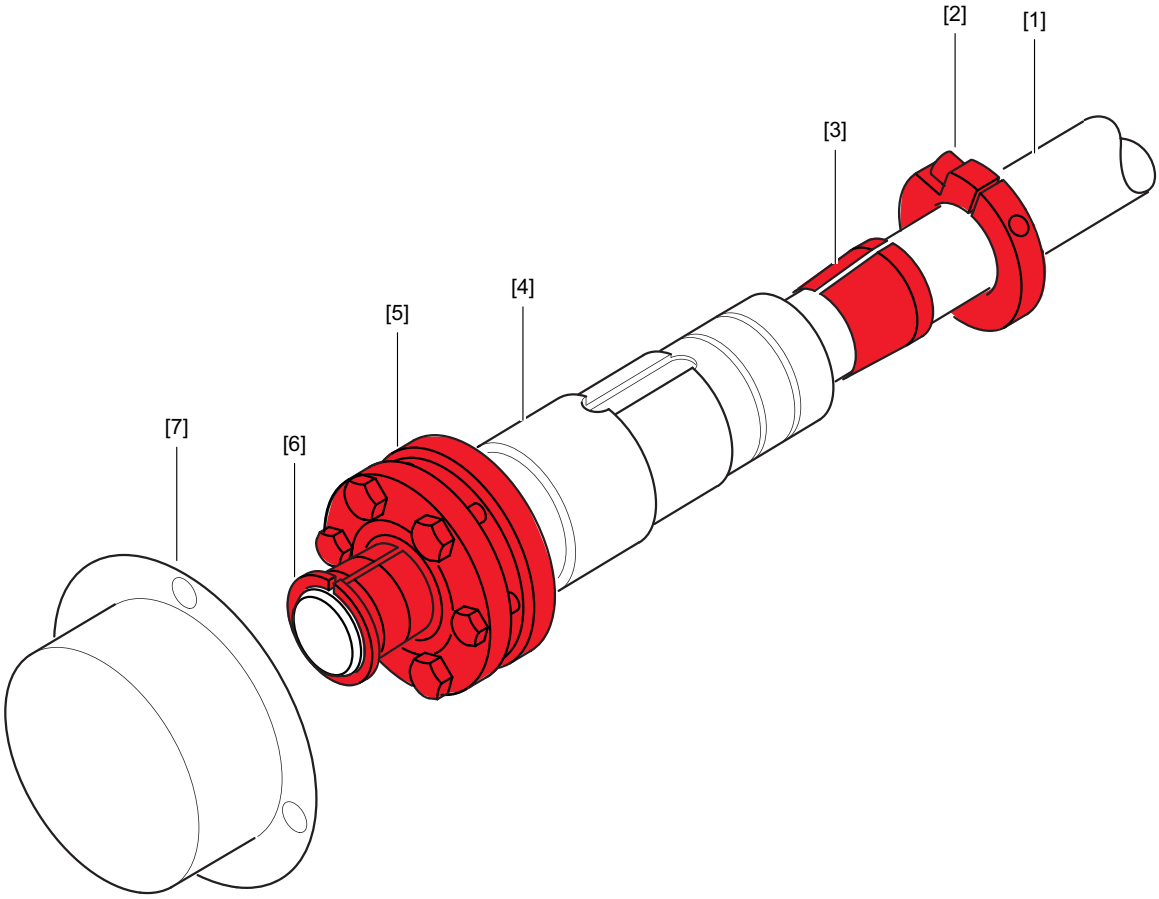

[1] Customer shaft
[2] Clamping ring
[3] Conical bronze bushing
[4] Hollow shaft in gear unit
[5] Shrink disk
[6] Conical steel bushing
[7] Fixed safety cover

Advantages of TorqLOC®

The TorqLOC® hollow shaft mounting system is characterized by the following advantages:

- Cost saving as the customer shaft can be made from drawn material up to quality h11.
- Cost saving because different customer shaft diameters can be realized with one hollow shaft diameter and different bushings.
- Simple installation as there is no need to accommodate any shaft connections.

– Simple removal even after many hours of operation as the formation of contact corrosion has been reduced and the conical connections can easily be released.

Technical data for TorqLOC®

The TorqLOC® hollow shaft mounting system is approved for output torques of 80 Nm to 20 000 Nm.

The following gear units are available with TorqLOC® hollow shaft mounting system:

– Parallel-shaft helical gear units in gear unit sizes 37 to 157 (FT37 – FT107)
– Helical-bevel gear units in gear unit sizes 37 to 157 (KT37 – KT157), 19 to 49 (KT19 – KT49).
– Helical-worm gear units in gear unit sizes 37 to 97 (ST37 – ST97)
– SPIROPLAN® right-angle gear units in gear unit sizes 29 to 59 (WT29 – WT59)

Available options

The following options are available for gear units with TorqLOC® hollow shaft mounting system:

– for helical-bevel, helical-worm and SPIROPLAN® right-angle gear units (KT.., ST.., WT.9..): "Torque arm" option (../T)
– for parallel-shaft helical gear units (FT..): "Rubber buffer" option (../G).

2.7.9 Notes on stainless shrink disk or output shaft

Before using a stainless steel shrink disk or stainless steel output shaft, check if the ambient conditions, used chemicals and cleaning agents are compatible with the stainless steel material. For information on the material, refer to the order confirmation.

2.7.10 Flange contours

Flange contours of RF.. and R..F gear units

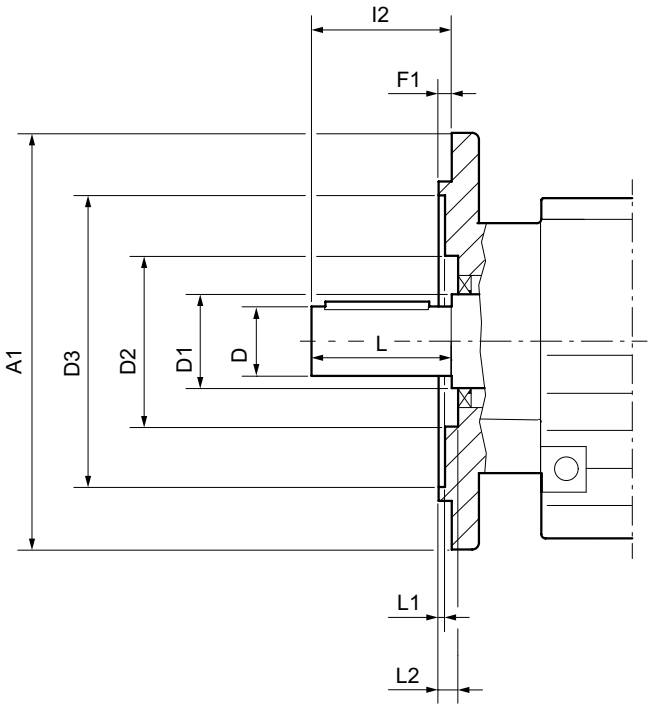

Check dimensions L1 and L2 for selection and installation of output elements.

Type	Dimensions in mm											
	A1	D	D1	D2		D3	F1	I2	L	L1		L2
				RF	R..F					RF	R..F	
RF07, R07F	120	20	22	38	38	72	3	40	40	2	2	6
	140[1]	20	22	38	–	85	3	40	40	2	–	6
	160[1]	20	22	38	–	100	3.5	40	40	2.5	–	6.5
RF17, R17F	120	20	25	46	46	65	3	40	40	1	1	5
	140	20	25	46	–	78	3	40	40	1	–	5
	160[1]	20	25	46	–	95	3.5	40	40	1	–	6
RF27, R27F	120	25	30	54	54	66	3	50	50	1	1	6
	140	25	30	54	–	79	3	50	50	3	–	7
	160	25	30	54	–	92	3.5	50	50	3	–	7
RF37, R37F	120	25	35	60	63	70	3	50	50	5	4	7
	140	25	35	60	–	85	3	50	50	5	–	7
	160	25	35	60	–	96	3.5	50	50	1	–	7.5
	200[1]	25	35	60	–	119	3.5	50	50	1	–	7.5

1 The flange contour protrudes below the foot surface.

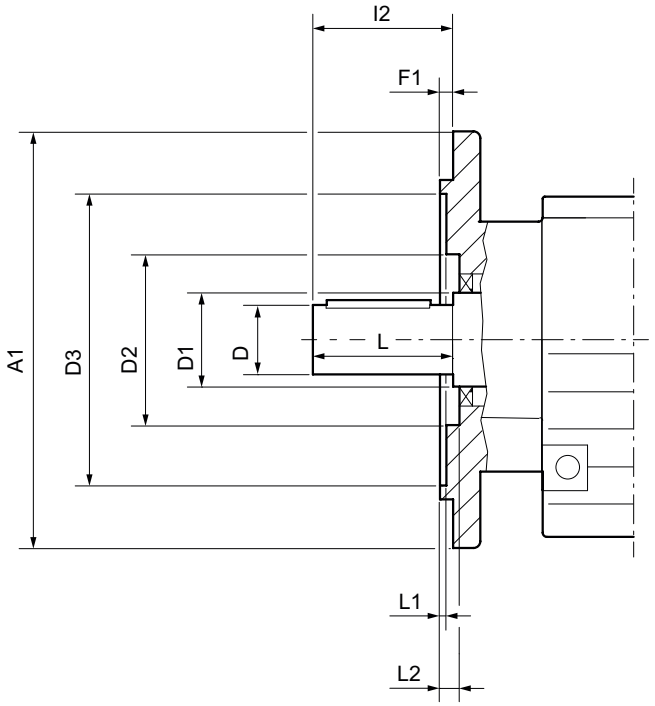

Check dimensions L1 and L2 for selection and installation of output elements.

Type	Dimensions in mm											
	A1	D	D1	D2		D3	F1	I2	L	L1		L2
				RF	R..F					RF	R..F	
RF47, R47F	140	30	35	72	64	82	3	60	60	4	1	6
	160	30	35	72	–	96	3.5	60	60	0.5	–	6.5
	200	30	35	72	–	116	3.5	60	60	0.5	–	6.5
RF57, R57F	160	35	40	76	75	96	3.5	70	70	4	2.5	5
	200	35	40	76	–	116	3.5	70	70	0	–	5
	250[1]	35	40	76	–	160	4	70	70	0.5	–	5.5
RF67, R67F	200	35	50	90	90	118	3.5	70	70	2	4	7
	250	35	50	90	–	160	4	70	70	1	–	7.5
RF77, R77F	250	40	52	112	100	160	4	80	80	0.5	2.5	7
	300[1]	40	52	112	–	210	4	80	80	0.5	–	7
RF87, R87F	300	50	62	123	122	210	4	100	100	0	1.5	8
	350	50	62	123	–	226	5	100	100	1	–	9
RF97	350	60	72	136	–	236	5	120	120	0	–	9
	450	60	72	136	–	320	5	120	120	0	–	9
RF107	350	70	82	157	–	232	5	140	140	0	–	11
	450	70	82	186	–	316	5	140	140	0	–	11
RF127	450	90	108	180	–	316	5	170	170	0	–	10
RF137	450	90	108	180	–	316	5	170	170	0	–	10
	550	90	108	180	–	416	5	170	170	0	–	10

1 The flange contour protrudes below the foot surface.

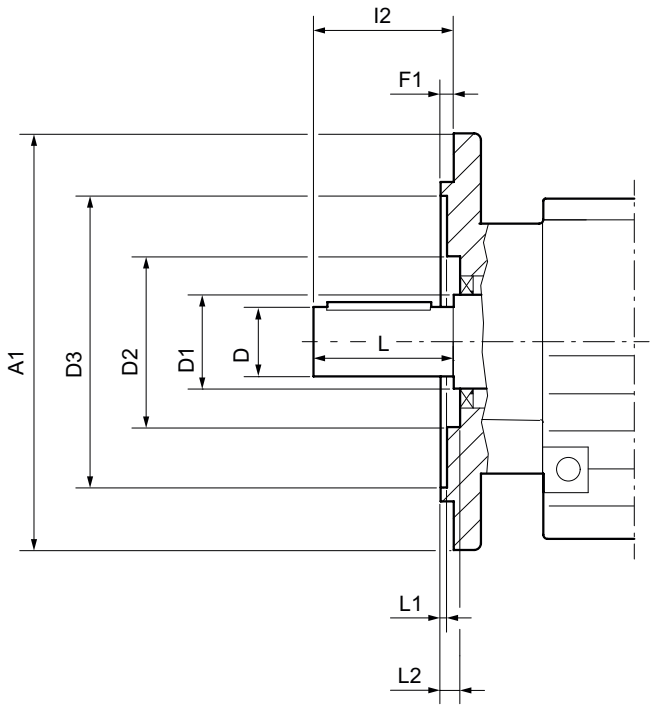

Check dimensions L1 and L2 for selection and installation of output elements.

Type	Dimensions in mm											
	A1	D	D1	D2		D3	F1	l2	L	L1		L2
				RF	R..F					RF	R..F	
RF147	450	110	125	210	–	316	5	210	210	0	–	10
	550	110	125	210	–	416	5	210	210	0	–	10
RF167	550	120	145	290	–	416	5	210	210	1	–	10
	660	120	145	290	–	517	6	210	210	2	–	11

Flange contours of FF.., KF.., SF.. and WF.. gear units

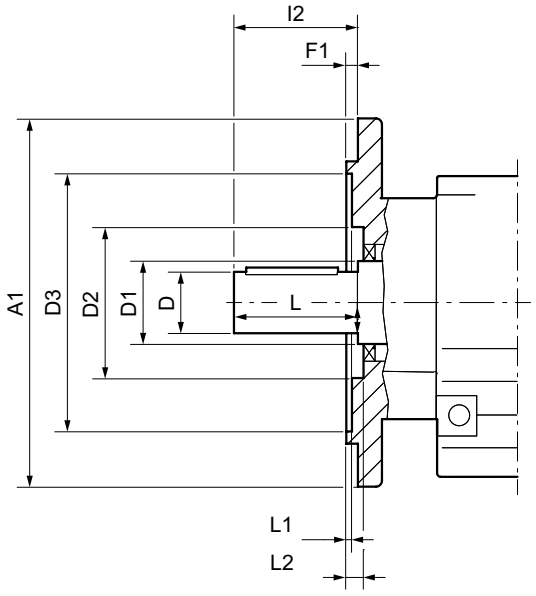

Check dimensions L1 and L2 for selection and installation of output elements.

Type	Dimensions in mm									
	A1	D	D1	D2	D3	F1	I2	L	L1	L2
FF27	160	25	40	66	96	3.5	50	50	3	18.5
FF37	160	25	30	70	94	3.5	50	50	2	6
FF47	200	30	40	72	115	3.5	60	60	3.5	7.5
FF57	250	35	40	84	155	4	70	70	4	9
FF67	250	40	50	84	155	4	80	80	4	9
FF77	300	50	55	82	205	4	100	100	5	9
FF87	350	60	65	115	220	5	120	120	5	9
FF97	450	70	75	112	320	5	140	140	8	10
FF107	450	90	100	159	318	5	170	170	16	9
FF127	550	110	118	–	420	5	210	210	10	–
FF157	660	120	135	190	520	6	210	210	8	14
KF19	120	20	25	–	70	2.5	40	40	–	11.5
	160	20	25	–	100	2.5	40	40	–	11.5
KF29	160	25	30	–	109	3.5	50	50	–	6.5
	200	25	30	–	115	3.5	50	50	–	6.5
KF37	160	25	30	70	94	3.5	50	50	2	6
KF39	160	30	39	68	96	3.5	60	60	13.5	23.5
KF47	200	30	40	72	115	3.5	60	60	3.5	7.5
KF49	200	35	49	76	115	3.5	70	70	24.5	28
KF57	250	35	40	84	155	4	70	70	4	9
KF67	250	40	50	84	155	4	80	80	4	9

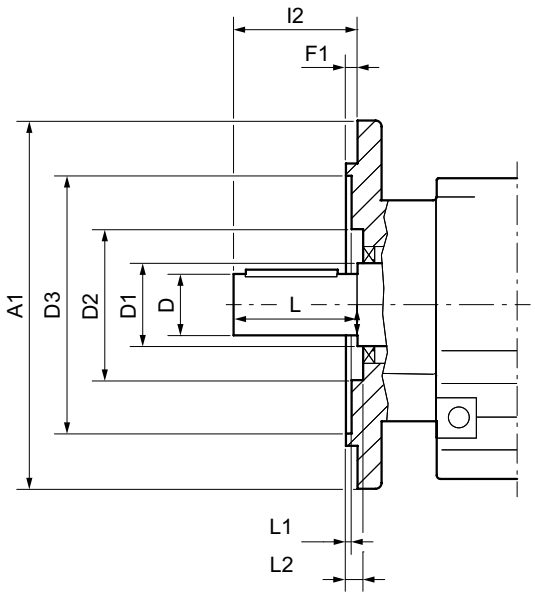

Check dimensions L1 and L2 for selection and installation of output elements.

Type	Dimensions in mm									
	A1	**D**	**D1**	**D2**	**D3**	**F1**	**l2**	**L**	**L1**	**L2**
KF77	300	50	55	82	205	4	100	100	5	9
KF87	350	60	65	115	220	5	120	120	5	9
KF97	450	70	75	112	320	5	140	140	8	10
KF107	450	90	100	159	318	5	170	170	16	9
KF127	550	110	118	–	420	5	210	210	10	–
KF157	660	120	135	190	520	6	210	210	8	14
SF37	120	20	25	–	68	3	40	40	6	–
	160	20	25	–	96	3.5	40	40	5.5	–
SF47	160	25	30	70	94	3.5	50	50	2	6
SF57	200	30	40	72	115	3.5	60	60	3.5	7.5
SF67	200	35	45	–	115	3.5	70	70	8.5	–
SF77	250	45	55	108	160	4	90	90	8	9
SF87	350	60	65	130	220	5	120	120	6	10
SF97	450	70	75	150	320	5	140	140	8.5	10
WF10	80	16	25	–	39	2.5	40	40	30	–
	120	16	25	39	74	3	40	40	5	30
WF19	110	20	30	44	53	-4	40	40	27	35
	120	20	30	–	45	2.5	40	40	37.5	–
WF20	110	20	30	44	53	-4	40	40	27	35
	120	20	30	–	45	2.5	40	40	37.5	–
WF29	120	20	25	–	70	2.5	40	40	–	11.5
	160	20	25	–	100	2.5	40	40	–	11.5

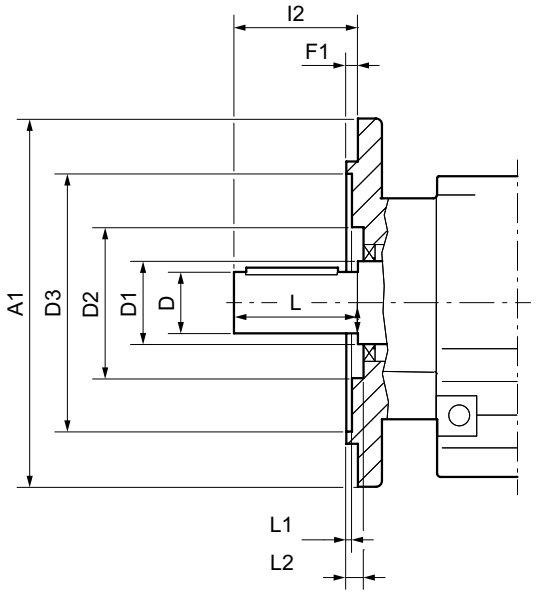

Check dimensions L1 and L2 for selection and installation of output elements.

Type	Dimensions in mm									
	A1	**D**	**D1**	**D2**	**D3**	**F1**	**I2**	**L**	**L1**	**L2**
WF30	120	20	30	48	63	2.5	40	40	18	27
	160	20	30	48	63	2.5	40	40	33	42
WF39	160	25	30	–	109	3.5	50	50	–	6.5
	200	25	30	–	115	3.5	50	50	–	6.5
WF49	160	30	39	–	97	3.5	60	60	15.3	23.5
WF59	200	35	49	76	115	3.5	70	70	16	25

Flange contours of FAF.., KAF.., SAF.. and WAF.. gear units

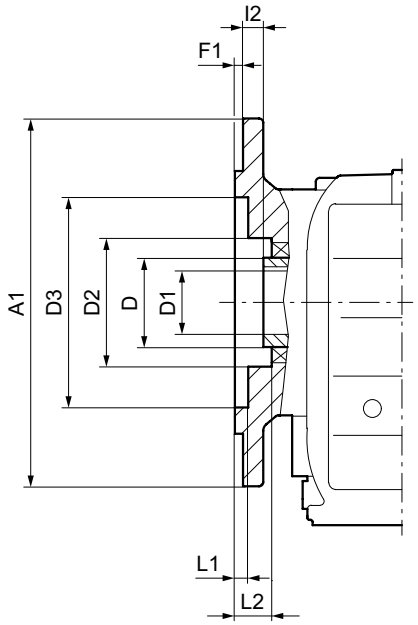

Check dimensions L1 and L2 for selection and installation of output elements.

Type	Dimensions in mm								
	A1	D	D1	D2	D3	F1	l2	L1	L2
FAF27	160	40	25	66	96	3.5	20	3	18.5
FAF37	160	45	30	62	94	3.5	24	2	30
FAF47	200	50	35	70	115	3.5	25	3.5	31.5
FAF57	250	55	40	76	155	4	23.5	4	31
FAF67	250	55	40	76	155	4	23	4	31
FAF77	300	70	50	95	205	4	37	5	45
FAF87	350	85	60	120	220	5	30	5	39
FAF97	450	95	70	135	320	5	41.5	5.5	51
FAF107	450	118	90	224	320	5	41	16	52
FAF127	550	135	100	185	420	5	51	6	63
FAF157	660	155	120	200	520	6	60	10	74
KAF19	120	30	20	60	70	2.5	25	9	25.5
	160	30	20	60	100	2.5	25	9	25.5
KAF29	160	40	25 / 30	–	98	3.5	29.5	–	6.5
	200	40	25 / 30	–	118	3.5	29.5	–	6.5
KAF37	160	45	30	62	94	3.5	24	2	30
KAF39	160	50	30 / 35	68	96	3.5	24.5	10	27
KAF47	200	50	35	70	115	3.5	25	3.5	8.5
KAF49	200	55	35 / 40	76	115	3.5	32.5	16	34.5
KAF57	250	55	40	76	155	4	23.5	4	31
KAF67	250	55	40	76	155	4	23	4	31

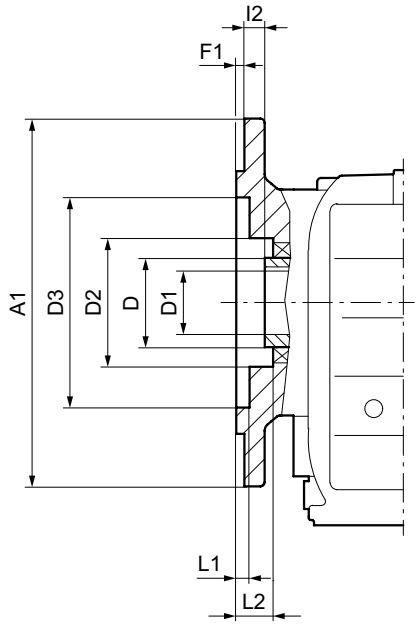

Check dimensions L1 and L2 for selection and installation of output elements.

Type	Dimensions in mm								
	A1	**D**	**D1**	**D2**	**D3**	**F1**	**I2**	**L1**	**L2**
KAF77	300	70	50	95	205	4	37	5	45
KAF87	350	85	60	120	220	5	30	5	39
KAF97	450	95	70	135	320	5	41.5	5.5	51
KAF107	450	118	90	224	320	5	41	16	52
KAF127	550	135	100	185	420	5	51	6	63
KAF157	660	155	120	200	520	6	60	10	74
SAF37	120	35	20	–	68	3	15	6	–
	160	35	20	–	96	3.5	15	5.5	–
SAF47	160	45	30 / 25	62	94	3.5	24	2	30
SAF57	200	50	35 / 30	70	115	3.5	25	3.5	31.5
SAF67	200	65	45 / 40	91	115	3.5	42.5	4	48.5
SAF77	250	80	60 / 50	112	164	4	45.5	5	53.5
SAF87	350	95	70 / 60	131	220	5	52.5	6	62.5
SAF97	450	120	90 / 70	160	320	5	60	6.5	69
WAF10	80	25	16	–	39	2.5	23	30	–
	120	25	16	39	74	3	23	5	30
WAF19	110	30	18 / 20	45	53	- 4	30	27	35
	120	30	18 / 20	–	45	2.5	30	37.5	–
WAF20	110	30	18 / 20	45	53	- 4	30	27	35
	120	30	18 / 20	–	45	2.5	30	37.5	–
WAF29	120	30	20	60	70	2.5	25	9	25.5
	160	30	20	60	100	2.5	25	9	25.5

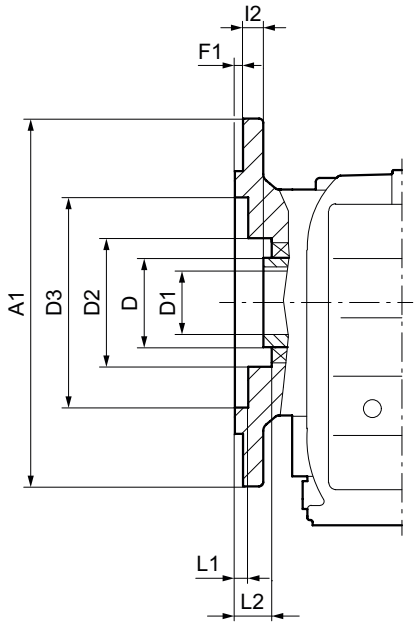

Check dimensions L1 and L2 for selection and installation of output elements.

Type	Dimensions in mm								
	A1	D	D1	D2	D3	F1	I2	L1	L2
WAF30	120	30	20	48	63	2.5	19.5	18	27
	160	30	20	48	63	2.5	34.5	22	42
WAF39	160	40	25 / 30	–	105	3.5	33.5	–	6.5
	200	40	25 / 30	–	118	3.5	33.5	–	6.5
WAF49	160	50	30 / 35	–	97	3.5	24.5	15.3	23.5
WAF59	200	55	35 / 40	76	115	3.5	32.5	16	25

2.7.11 Optional output shafts

The available output shafts for the gear units and gearmotors are shown below. For the standard shaft dimensions, refer to the dimension sheets. Optional shafts are available on request. The optional shaft diameters or the optional shaft material can influence the permitted maximum torque M_{amax} and the permitted maximum overhung load of the gear units as shown in the catalog. The deviating values and other shaft dimensions are available on request.

R, RF, RZ, R..F helical gear units

R, RF, RZ, R..F helical gear units									
Gear unit size	**07**	**17**	**27**	**37**	**47**	**57**	**67**	**77**	**87**
Solid shaft in mm	20×40[1] 16×40	20×40[1,2] 16×40	25×50[1,2]	25×50[1,2]	30×60[1,2]	35×70[1,2]	35×70[1,2] 40×80	40×80[1,2]	50×100[1,2]
Solid shaft in inches	0.75×1.57[1]	0.75×1.57[1]	1×1.97[1]	1×1.97[1]	1.25×2.36[1]	1,375×2.76[1]	1,375×2.76[1]	1.625×3.15[1]	2,125×3.94[1]

1 Optional stainless steel X17CrNi16-2+QT900.

2 Optional solid shaft without key (smooth).

R, RF helical gear units

Gear unit size	97	107	127	137	147	167
Solid shaft in mm	60×120[1,2]	70×140[1,2]	90×170[2]	90×170[1,2]	110×210[1,2]	120×210
Solid shaft in inches	2,375×4.72[1]	2.875×5.51	3.625×6.69	3.625×6.69	4.375×8.27	4.75×8.27

1 Optional stainless steel X17CrNi16-2+QT900.
2 Optional solid shaft without key (smooth).

F series parallel-shaft helical gear units

F parallel-shaft helical gear units

Gear unit size	27	37	47	57	67	77
Solid shaft in mm	25×50[1]	25×50[1,2]	30×60[1,2] 35×70[1,2]	35×70[1]	40×80[1,2] 35×70	50×100[1,2] 45×90[1,2]
Solid shaft in mm 2nd shaft end	25×50	25×50	30×60[1,2] 35×70[1)]	35×70[2]	40×80[1,2]	50×100[1,2]
Solid shaft in inches	1×1.97[1]	1×1.97[1]	1.25×2.36[1] 1.375×2.76	1,375×2.76[1]	1.625×3.15[1] 1.375×2.76	2×3.94[1] 1.75×3.54
Solid shaft in inches 2nd shaft end	–	–	1.25×2.36	–	1.625×3.15	2×3.94

1 Optional stainless steel X17CrNi16-2+QT900.
2 Optional solid shaft without key (smooth).

F parallel-shaft helical gear units

Gear unit size	87	97	107	127	157
Solid shaft in mm	60×120[1,2]	70×140[1]	90×170	110×210	120×210
Solid shaft in mm 2nd shaft end	60×120[1,2]	70×140	90×170[1,2]	110×210[2]	–
Solid shaft in inches	2,375×4.72[1]	2.875×5.51[1]	3.625×6.69	4.375×8.27	4.75×8.27
Solid shaft in inches 2nd shaft end	–	–	3.625×6.69	4.375×8.27	–

1 Optional stainless steel X17CrNi16-2+QT900.
2 Optional solid shaft without key (smooth).

FF series parallel-shaft helical gear units

FF series parallel-shaft helical gear units

Gear unit size	27	37	47	57	67	77
Solid shaft in mm	25×50[1]	25×50[1,2]	30×60[1,2] 35×70[1]	35×70[1,2]	40×80[1,2] 35×70	50×100[1,2] 45×90
Solid shaft in inches	1×1.97[1]	1×1.97[1]	1.25×2.36[1] 1.375×2.76	1,375×2.76[1]	1.625×3.15[1] 1.375×2.76	2×3.94[1] 1.75×3.54

1 Optional stainless steel X17CrNi16-2+QT900.
2 Optional solid shaft without key (smooth).

FF series parallel-shaft helical gear units

Gear unit size	87	97	107	127	157
Solid shaft in mm	60×120[1]	70×140[1]	90×170	110×210	120×210[2]
Solid shaft in inches	2,375×4.72[1]	2.875×5.51[1]	3.625×6.69	4.375×8.27	4.75×8.27

1 Optional stainless steel X17CrNi16-2+QT900.
2 Optional solid shaft without key (smooth).

FZ series parallel-shaft helical gear units

FZ parallel-shaft helical gear units

Gear unit size	27	37	47	57	67	77
Solid shaft in mm	25×50[1]	25×50	30×60 35×70	35×70	40×80	50×100

1 Optional stainless steel X17CrNi16-2+QT900.

FZ series parallel-shaft helical gear units

Gear unit size	87	97	107	127	157
Solid shaft in mm	60×120	70×140	90×170[1]	110×210	120×210

1 Optional stainless steel X17CrNi16-2+QT900.

FA, FAF, FAZ parallel-shaft helical gear units

FA, FAF, FAZ parallel-shaft helical gear units

Gear unit size	27	37	47	57	67	77
Hollow shaft in mm	25[1]	25[1] 30[1]	30[1,2,3] 35[1,2,3]	40[1,2,3]	40[1,2,3]	50[1,2,3]
Hollow shaft in inches	1[1]	1.25[1]	1.188 1.25[1] 1,375[1]	1.438 1.5[1]	1.438 1.5[1]	1.938 2[1]

1 Optional stainless steel X17CrNi16-2+QT900.
2 Optional with reinforced bearings.
3 Optional stainless steel X17CrNi16-2+QT900 with reinforced bearings.

FA, FAF, FAZ parallel-shaft helical gear units

Gear unit size	87	97	107	127	157
Hollow shaft in mm	60[1,2,3]	70[1,2,3]	80[1,2,3] 90[1,2,3]	100[1,2,3]	120[1]
Hollow shaft in inches	2,375[1] 2.438	2.75[1] 2.938	3.25 3.438 3.625	4	4.5

1 Optional stainless steel X17CrNi16-2+QT900.
2 Optional with reinforced bearings.
3 Optional stainless steel X17CrNi16-2+QT900 with reinforced bearings.

FH, FHF, FHZ parallel-shaft helical gear units

FH, FHF, FHZ parallel-shaft helical gear units

Gear unit size	27	37	47	57	67	77
Hollow shaft in mm	25[1]	30[1] 30×32[1]	35[1,2,3] 35×36[1,2,3]	40[1,2,3] 40×42[1,2,3]	40[1,2,3] 40×42[1,2,3]	50[1,2,3] 50×52[1,2,3]

1 Optional stainless steel X17CrNi16-2+QT900.
2 Optional with reinforced bearings.
3 Optional stainless steel X17CrNi16-2+QT900 with reinforced bearings.

FH, FHF, FHZ parallel-shaft helical gear units

Gear unit size	87	97	107	127	157
Hollow shaft in mm	65[1,2,3] 65×66[1,2,3]	75[1,2,3] 75×76[1,2,3]	95[1,2,3] 95×96[1,2,3]	105[1,2,3] 105×106[1,2,3]	125[1] 125/126

1 Optional stainless steel X17CrNi16-2+QT900.
2 Optional with reinforced bearings.
3 Optional stainless steel X17CrNi16-2+QT900 with reinforced bearings.

FV, FVF, FVZ parallel-shaft helical gear units

FV, FVF, FVZ parallel-shaft helical gear units

Gear unit size	37	47	57	67	77	87	97	107
Hollow shaft Splined hollow shaft	N30	N35	N35	N45	N50	N65[1]	N70	N85

1 Optional stainless steel X17CrNi16-2+QT900.

FT parallel-shaft helical gear units

FT parallel-shaft helical gear units

Gear unit size	37	47	57	67	77
Hollow shaft in mm With TorqLOC® With TorqLOC® Plus	25[1] 30[1]	25 30[1] 35[1]	35[1] 38[1] 40[1]	35[1] 38[1] 40[1]	40 42 45 50[1] 51
Hollow shaft in inches With TorqLOC® With TorqLOC® Plus	1[1] 1,188[1] 1.25[1]	1,188[1] 1.25[1] 1,375[1] 1,438[1]	1,375[1] 1,438[1] 1.5[1] 1,625[1]	1,375[1] 1,438[1] 1.5[1] 1,625[1] 1.688	1,625[1] 1.688 1.75[1] 1,938[1] 2[1]

1 Optional stainless steel X17CrNi16-2+QT900.

FT parallel-shaft helical gear units

Gear unit size	87	97	107	127	157
Hollow shaft in mm With TorqLOC® With TorqLOC® Plus	50 51[1] 55 60[1] 62[1] 65[1]	60 62[1] 65 70[1] 75[1]	80[1] 85[1] 90[1] 92[1] 95[1]	90 95[1] 100[1] 105[1]	110[1] 120 125[1] 127[1]
Hollow shaft in inches With TorqLOC® With TorqLOC® Plus	1,938[1] 2[1] 2,375[1] 2,438[1]	2,438[1] 2.75[1] 2,938[1]	3.25[1] 3,438[1] 3,625[1] 3.75[1]	3,438[1] 3.75[1] 3,938[1] 4[1] 4,188[1]	4,438[1] 4.5[1] 4,938[1] 5[1]

1 Optional stainless steel X17CrNi16-2+QT900.

K series helical-bevel gear units

K helical-bevel gear units

Gear unit size	19	29	39	49	37	47	57	67
Solid shaft in mm	20×40[1,2]	25×50[1,2]	30×60[1,2]	35×70[1]	25×50[1,2]	30×60[1,2] 35×70[1,2]	35×70[1,2]	40×80[1,2] 35×70
Solid shaft in mm 2nd shaft end	20×40[1]	25×50[1]	30×60[1,2]	35×70[1,2]	25×50[1,2]	30×60[1,2] 35×70[1]	35×70[1,2]	40×80[1,2] 35×70
Solid shaft in inches	0.75×1.57[1]	1×1.97[1]	1×1.97[1] 1.25×2.36[1]	1,375×2.76[1]	1×1.97[1]	1.25×2.36[1] 1.375×2.76	1,375×2.76[1]	1.375×2.76 1.625×3.15[1]
Solid shaft in inches 2nd shaft end	0.75×1.57[1]	1×1.97[1]	1.25×2.36[1]	1,375×2.76[1]	1×1.97	1.25×2.36 1.375×2.76	1.375×2.76	1.625×3.15 1.375×2.76

1 Optional stainless steel X17CrNi16-2+QT900.
2 Optional solid shaft without key (smooth).

K helical-bevel gear units

Gear unit size	77	87	97	107	127	157	167	187
Solid shaft in mm	50×100[1,2] 45×90[1,2]	60×120[1,2]	70×140[1,2]	90×170[1,2]	110×210[1]	120×210[2]	160×250[2] 140×250	190×320[2] 160×300
Solid shaft in mm 2nd shaft end	50×100[1,2] 45×90	60×120[1,2]	70×140[2]	90×170[1,2]	110×210[2]	120×210[2]	160×250	190×320[2]
Solid shaft in inches	2×3.94[1] 1.75 × 3.54	2,375×4.72[1]	2.875×5.51[1]	3.625×6.69	4.375×8.27	4.75×8.27	6.25×9.84	7.5×12.6
Solid shaft in inches 2nd shaft end	2×3.94 1.75 × 3.54	2.375×4.72	2.875×5.51	3.625×6.69	4.375×8.27	4.75×8.27	6.25×9.84	7.5×12.6

1 Optional stainless steel X17CrNi16-2+QT900.
2 Optional solid shaft without key (smooth).

KF helical-bevel gear units

KF series helical-bevel gear units

Gear unit size	19	29	39	49	37	47	57
Solid shaft in mm	20×40[1]	25×50[1]	30×60[1]	35×70[1]	25×50[1,2]	30×60[1,2] 35×70[1]	35×70[1,2]
Solid shaft in mm 2nd shaft end	–	–	–	–	25 × 50[1]	30 × 60	35 × 70
Solid shaft in inches	0.75×157[1]	1×1.97[1]	1×1.97[1] 1.25×2.36[1]	1,375×2.76[1]	1×1.97[1]	1.25×2.36[1]	1,375×2.76[1]

1 Optional stainless steel X17CrNi16-2+QT900.
2 Optional solid shaft without key (smooth).

KF series helical-bevel gear units

Gear unit size	67	77	87	97	107	127	157
Solid shaft in mm	40×80[1,2] 35×70	50×100[1,2] 45×90	60×120[1,2]	70×140[1,2]	90×170[2]	110×210	120×210[2]
Solid shaft in mm 2nd shaft end	40×80 35×70	50×100[1]	60×120	70×140[2]	90×170	110×210	–
Solid shaft in inches	1.625×3.15[1] 1.375×2.76	2×3.94[1] 1.75×3.54	2,375×4.72[1]	2.875×5.51[1]	3.625×6.69	4.375×8.27	4.75×8.27

1 Optional stainless steel X17CrNi16-2+QT900.
2 Optional solid shaft without key (smooth).

KZ helical-bevel gear units

KZ series helical-bevel gear units

Gear unit size	37	47	57	67	77
Solid shaft in mm	25×50	30×60 35×70	35×70	40×80	50×100

KZ series helical-bevel gear units

Gear unit size	87	97	107	127	157
Solid shaft in mm	60×120	70×140	90×170[1]	110×210	120×210

1 Optional stainless steel X17CrNi16-2+QT900.

KA, KAF, KAZ helical-bevel gear units

KA, KAF, KAZ helical-bevel gear units

Gear unit size	19	29	39	49	37	47	57
Hollow shaft in mm	20[1]	25[1] 30[1]	30[1] 35[1]	35[1] 40[1]	25[1] 30[1]	30[1,2,3] 35[1,2,3]	40[1,2,3]
Hollow shaft in inches	0.75[1]	1[1]	1.25[1] 1,375[1]	1,375[1] 1.5[1]	1.25[1]	1.188 1.25[1] 1,375[1]	1.438 1.5[1]

1 Optional stainless steel X17CrNi16-2+QT900.
2 Optional with reinforced bearings.
3 Optional stainless steel X17CrNi16-2+QT900 with reinforced bearings.

KA, KAF, KAZ helical-bevel gear units

Gear unit size	67	77	87	97	107	127	157
Hollow shaft in mm	40[1,2,3]	50[1,2,3]	60[1,2,3]	70[1,2,3]	80[1,2,3] 90[1,2,3]	100[1,2,3]	120[1]

KA, KAF, KAZ helical-bevel gear units

Gear unit size	67	77	87	97	107	127	157
Hollow shaft in inches	1.438 1.5[1]	1.938 2[1]	2,375[1] 2.438	2.75[1] 2.938	3.25 3.438 3.625	4[2]	4.5

1 Optional stainless steel X17CrNi16-2+QT900.
2 Optional with reinforced bearings.
3 Optional stainless steel X17CrNi16-2+QT900 with reinforced bearings.

KH, KHF, KHZ helical-bevel gear units

KH, KHF, KHZ helical-bevel gear units

Gear unit size	19	29	39	49	37	47	57	67
Hollow shaft in mm	20[1]	25[1]	35[1]	40[1]	30[1] 30×32[1]	35[1,2,3] 35×36[1,2,3]	40[1,2,3] 40×42[1,2,3]	40[1,2,3] 40×42[1,2,3]

1 Optional stainless steel X17CrNi16-2+QT900.
2 Optional with reinforced bearings.
3 Optional stainless steel X17CrNi16-2+QT900 with reinforced bearings.

KH, KHF, KHZ helical-bevel gear units

Gear unit size	77	87	97	107	127	157	167	187
Hollow shaft in mm	50[1,2,3] 50×52[1,2,3]	65[1,2,3] 65×66[1,2,3]	75[1,2,3] 75×76[1,2,3]	95[1,2,3] 95×96[1,2,3]	105[1,2,3] 105×106[1,2,3]	125[1] 125/126	135×140[1]	155×160[1] 135/140

1 Optional stainless steel X17CrNi16-2+QT900.
2 Optional with reinforced bearings.
3 Optional stainless steel X17CrNi16-2+QT900 with reinforced bearings.

KV, KVF, KVZ helical-bevel gear units

KV, KVF, KVZ helical-bevel gear units

Gear unit size	37	47	57	67	77	87	97	107
Splined hollow shaft	N30	N35	N35	N45	N50	N65[1]	N70	N85

1 Optional stainless steel X17CrNi16-2+QT900.

KT helical-bevel gear units

KT series helical-bevel gear units

Gear unit size	19	29	39	49	37	47	57
Hollow shaft in mm with TorqLOC® with TorqLOC® Plus	20[1]	25[1]	30[1] 35[1]	35[1] 40[1]	25[1] 30[1]	25[1] 30[1] 35[1]	35[1] 38[1] 40[1]

KT series helical-bevel gear units

Gear unit size	19	29	39	49	37	47	57
Hollow shaft in inch with TorqLOC® with TorqLOC® Plus	0,625[1] 0,688[1] 0.75[1]	0,984[1] 1[1]	1,188[1] 1.25[1] 1,375[1] 1,438[1]	1.25 1,375[1] 1,438[1] 1.5[1] 1,625[1] 1.688	1[1] 1,188[1] 1.25[1]	1,188[1] 1.25[1] 1,375[1] 1,438[1]	1,375[1] 1,438[1] 1.5[1] 1,625[1]

1 Optional stainless steel X17CrNi16-2+QT900.

KT series helical-bevel gear units

Gear unit size	67	77	87	97	107	127	157
Hollow shaft in mm with TorqLOC® with TorqLOC® Plus	35[1] 38[1] 40[1]	40 42 45 50[1] 51	50 51[1] 55 60[1] 62[1] 65[1]	60 62[1] 65 70[1] 75[1]	80[1] 85[1] 90[1] 92[1] 95[1]	90 95[1] 100[1] 105[1]	110[1] 120 125[1] 127[1]
Hollow shaft in inch with TorqLOC® with TorqLOC® Plus	1,375[1] 1,438[1] 1.5[1] 1,625[1] 1.688	1,625[1] 1.688 1.75[1] 1,938[1] 2[1]	1,938[1] 2[1] 2,375[1] 2,438[1]	2,438[1] 2.75[1] 2,938[1]	3.25[1] 3,438[1] 3,625[1] 3.75[1]	3,438[1] 3.75[1] 3,938[1] 4[1] 4,188[1]	4,438[1] 4.5[1] 4,938[1] 5[1]

1 Optional stainless steel X17CrNi16-2+QT900.

S helical-worm gear units

S helical-worm gear units

Gear unit size	37	47	57	67	77	87	97
Solid shaft in mm	20×40[1,2]	25×50[1,2]	30×60[1,2]	35×70[1,2] 40×80[1]	45×90[1,2] 50×100[1]	60×120[1]	70×140[1]
Solid shaft in mm 2nd shaft end	20×40[1,2]	25×50[1,2]	30×60[1,2]	35×70[1,2] 40×80	45×90[1] 50×100	60×120	70×140[1]
Solid shaft in inches	0.75×1.57[1]	1×1.97[1]	1.25×2.36[1]	1,375×2.76[1] 1.625×3.15	1.75×3.54[1] 2×3.94	2,375×4.72[1]	2.875×5.51[1]
Solid shaft in inches 2nd shaft end	0.75×1.57	1×1.97	1.25×2.36	1.375×2.76 1.625×3.15	1.75×3.54 2×3.94	2.375×4.72	2.875×5.51

1 Optional stainless steel X17CrNi16-2+QT900.
2 Optional solid shaft without key (smooth).

SF. helical-worm gear units

SF. helical-worm gear units

Gear unit size	37	47	57	67	77	87	97
Solid shaft in mm	20×40[1,2]	25×50[1,2]	30×60[1,2]	35×70[1,2] 40×80[1]	45×90[1,2] 50×100[1]	60×120[1]	70×140[1]
Solid shaft in mm 2nd shaft end	20×40[1]	25×50[1]	30×60	35×70	45×90	60×120	70×140
Solid shaft in inches	0.75×1.57[1]	1×1.97[1]	1.25×2.36[1]	1,375×2.76[1] 1.625×3.15	1.75×3.54[1] 2×3.94	2,375×4.72[1]	2.875×5.51[1]

1 Optional stainless steel X17CrNi16-2+QT900.
2 Optional solid shaft without key (smooth).

SA, SAF, SAZ helical-worm gear units

SA, SAF, SAZ helical-worm gear units

Gear unit size	37	47	57	67	77	87	97
Hollow shaft in mm	20[1]	25[1] 30[1]	30[1] 35[1]	40[1] 45[1]	50[1] 60[1]	60[1] 70[1]	70[1] 90[1]
Hollow shaft in inches	0.75[1]	1.25[1]	1.188 1.25[1] 1,375[1]	1.5[1]	2[1]	2,375[1]	2.75[1]

1 Optional stainless steel X17CrNi16-2+QT900.

SH, SHF, SHZ helical-worm gear units

SH, SHF, SHZ helical-worm gear units

Gear unit size	37	47	57	67	77	87	97
Hollow shaft in mm	20[1]	30[1] 30×32[1]	35[1] 35×36[1]	40[1] 40/42	50[1] 50/52	65[1] 65/66	75[1] 75/76

1 Optional stainless steel X17CrNi16-2+QT900.

ST. helical-worm gear units

ST helical-worm gear units

Gear unit size	37	47	57	67	77	87	97
Hollow shaft in mm With TorqLOC® With TorqLOC® Plus	16[1] 19[1] 20[1]	25[1] 30[1]	25 30[1] 35[1]	35[1] 38[1] 40[1]	40 45 50[1] 51[1]	50 51[1] 60[1] 62[1] 65[1]	60 62[1] 70[1] 75[1]

ST helical-worm gear units

Gear unit size	37	47	57	67	77	87	97
Hollow shaft in inches	0,625[1]	1[1]	1,188[1]	1,375[1]	1,625[1]	1,938[1]	2,438[1]
With TorqLOC®	0,688[1]	1,188[1]	1.25[1]	1,438[1]	1.688	2[1]	2.75[1]
With TorqLOC® Plus	0.75[1]	1.25[1]	1,375[1]	1.5[1]	1.75[1]	2,375[1]	2,938[1]
			1,438[1]	1,625[1]	1,938[1]	2,438[1]	
				1.688	2[1]		

1 Optional stainless steel X17CrNi16-2+QT900.

SPIROPLAN® right-angle gear units W10, W20, W30

SPIROPLAN® right-angle gear units W

Gear unit size	10	20	30
Solid shaft in mm	14×30 16×40	20×40[1,2]	20×40[1,2]
Solid shaft in mm 2nd shaft end	16×40	20×40[1]	20×40[1,2]
Solid shaft in inches	0.625×1.57	0.75×1.57[1]	0.75×1.57[1]
Solid shaft in inches 2nd shaft end	0.625×1.57	0.75×1.57	0.75×1.57

1 Optional stainless steel X17CrNi16-2+QT900.
2 Optional solid shaft without key (smooth).

SPIROPLAN® right-angle gear units WF

SPIROPLAN® right-angle gear units WF

Gear unit size	10	20	30	19	29	39	49	59
Solid shaft in mm	16×40[1]	20×40[1]	20×40[1]	20×40[1]	20×40[1]	25×50[1]	30×60[1]	35×70[1]
Solid shaft in mm 2nd shaft end	20×40	20×40	20×40	20×40	–	–	–	–
Solid shaft in inches	0.625×1.57	0.75×1.57	0.75×1.57	0.75×1.57[1]	0.75×1.57[1]	1×1.97[1]	1×1.97[1]	1,375×2.76[1]

1 Optional stainless steel X17CrNi16-2+QT900.

SPIROPLAN® right-angle gear units WA, WAF

SPIROPLAN® WA, WAF right-angle gear units

Gear unit size	10	20	30	19	29	39	49	59
Hollow shaft in mm	14 16[1]	18[1] 20[1]	20[1]	18[1] 20[1]	20[1] 25[1] 30[1]	25[1] 30[1]	30[1] 35[1]	35[1] 40[1]
Hollow shaft in inches	0.625	0.75[1]	0.75[1]	0.75[1]	0.75[1] 1[1]	1[1]	1.25[1] 1,375[1]	1,375[1] 1.5[1]

1 Optional stainless steel X17CrNi16-2+QT900.

SPIROPLAN® right-angle gear units WH, WHF

SPIROPLAN® right-angle gear units WH, WHF

Gear unit size	29	39	49	59
Hollow shaft in mm	20[1]	25[1]	35[1]	40[1]
Hollow shaft in inches	0.75[1]	1[1]	1,375[1]	1.57[1]

1 Optional stainless steel X17CrNi16-2+QT900.

SPIROPLAN® right-angle gear units WT

SPIROPLAN® right-angle gear units WT

Gear unit size	29	39	49	59
Hollow shaft in mm With TorqLOC® With TorqLOC® Plus	16[1] 19[1] 20[1]	25[1]	30[1] 35[1]	35[1] 40[1]
Hollow shaft in inches With TorqLOC® With TorqLOC® Plus	0,625[1] 0,688[1] 0.75[1] 1[1]	1[1]	1,188[1] 1.25[1] 1,375[1] 1,438[1]	1.25 1,375[1] 1,438[1] 1.5[1] 1,625[1] 1.688

1 Optional stainless steel X17CrNi16-2+QT900.

2.7.12 Safety covers

Rotating safety cover

The following gear unit types with hollow shaft and shrink disk are equipped with a rotating safety cover as standard:

Gear unit type	Sizes
KH..	19 – 49 and 37 – 97
FH..	37 – 97
SH...	37 – 97
WH..	29 – 59

Should you require a fixed plastic or metal safety cover for safety reasons, refer to the part numbers in the following chapters.

High fixed plastic safety cover

The following gear unit types with hollow shaft and shrink disk are equipped with a high fixed plastic safety cover as standard:

Gear unit type	Sizes
FH..	27 and 107 – 127
KH..	107 – 127

Should you require a high fixed plastic safety cover for other gear unit types or sizes due to safety reasons, refer to the part numbers in the following chapters.

Fixed sheet metal safety cover

The following gear unit types with hollow shaft and shrink disk are equipped with a fixed sheet metal safety cover as standard:

Gear unit type	Sizes
KH..	157, 167 and 187
FH..	157
FT.., KT.., ST.., WT.. (with TorqLOC® hollow shaft mounting system)	All available sizes
Explosion-protected gear units FH.., KH.., SH.., WH..	All available sizes

Should you require a fixed sheet metal safety cover for other gear unit types or sizes, the part numbers required to order the cover can be found in the following chapter.

Flat fixed plastic safety cover

The following gear unit types with hollow shaft can optionally be equipped with a flat fixed plastic safety cover:

Gear unit type	Sizes
FA.., FV..	27 – 97

Gear unit type	Sizes
KA..	19 – 49 and 37 – 97
KV..	37 – 97
SA..	37 – 67
WA..	10 – 30 and 19 – 59

Should you require a flat fixed plastic safety cover for these gear unit types due to safety reasons, refer to the part numbers in the following chapters.

Motor mounting sizes and terminal box position with fixed safety cover

The size of the attached motor may be limited by the use of a high fixed safety cover for parallel-shaft helical gear units.

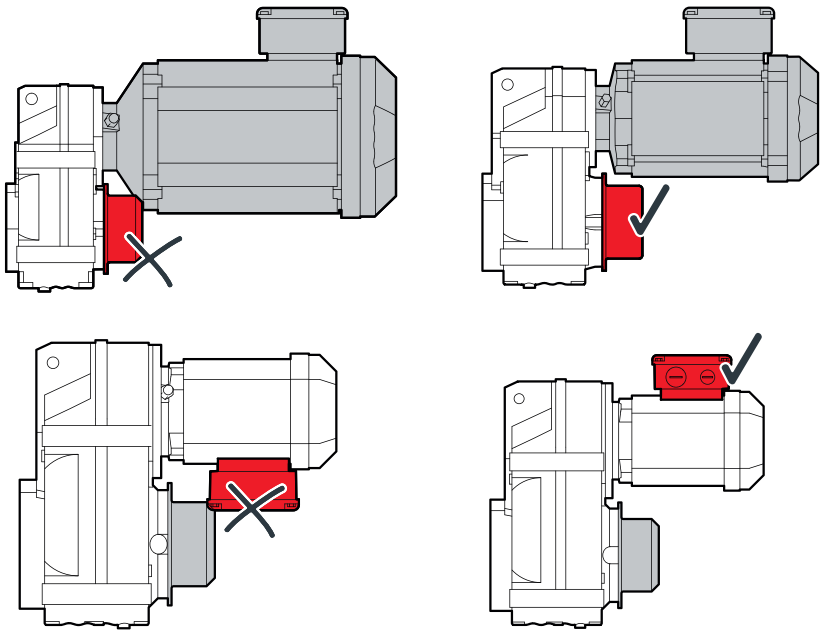

To simplify assembly and maintenance, **SEW-EURODRIVE** recommends a terminal box position ≠ 90° for parallel-shaft helical gear units with high safety cover. If necessary, check the configuration in the product configurator on the **SEW-EURODRIVE** website.

High fixed plastic safety cover

The following table shows the maximum possible motor mounting sizes, depending on the gear unit size, for a high fixed plastic safety cover:

Gear unit size	F..27	F..37	F..47	F..57	F..67	F..77	F..87	F..97
Maximum possible motor mounting size	71M	71M	80M	90L	112M	132L	160L	180L

Fixed sheet metal safety cover

The following table shows the maximum possible motor sizes, depending on the gear unit size, for a high fixed sheet metal safety cover:

Gear unit size	F..37	F..47	F..57	F..67	F..77	F..87	F..97
Maximum possible motor mounting size	71M	71M	80M	100L	132L	160L	180L

Part numbers and dimensions for high fixed plastic covers

00 002 00 18

FH../FA..

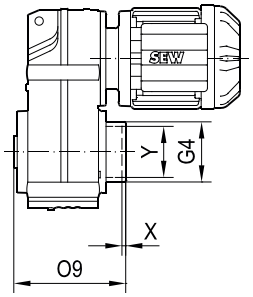

KH../KA..

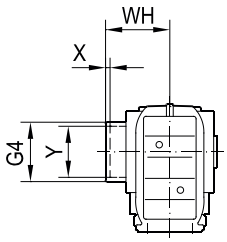

SH../SA..

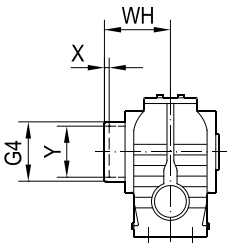

WH../WA..

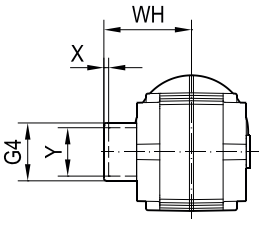

Parallel-shaft helical gearmotors	FH/FA ..27	FH/FA ..37	FH/FA ..47	FH/FA ..57	FH/FA ..67	FH/FA ..77	FH/FA ..87	FH/FA ..97
Part number	06435319	6435130	6435149	6435157	6435157	6435165	6435173	6435181
G4 in mm	58	78	88	100	100	121	164	185
O9 in mm	134	157	188.5	207.5	221.5	255	295	363.5
X in mm	0.8	2	4.5	7.5	6	6	4	6.5
Y in mm	56	75	83	83	93	114	159	174

Helical-bevel gearmotors	KH/KA ..19	KH/KA ..29
Part number	10684158	10684166
G4 in mm	62	68
WH in mm	83	90
X in mm	2	4
Y in mm	50	60

Helical-bevel gearmotors[1]	KH/KA ..37	KH/KA ..47	KH/KA ..57	KH/KA ..67	KH/KA ..77	KH/KA ..87	KH/KA ..97
Part number	6435130	6435149	6435157	6435157	6435165	6435173	6435181
G4 in mm	78	88	100	100	121	164	185
WH In mm	95	111.5	122.5	129	147	172	210.5
X in mm	0	1.5	5.5	3	1	2	4.5
Y in mm	75	83	83	93	114	159	174

1 Not possible for helical-bevel gear units with hollow shaft in foot-mounted design (KH..B and KA..B).

Helical-worm gearmotors	SH/SA ..37	SH/SA ..47	SH/SA ..57	SH/SA ..67	SH/SA ..77	SH/SA .. 87	SH/SA ..97
Part number	6435122	6435130	6435149	6435157	6435165	6435173	6435181

Helical-worm gearmotors	SH/SA ..37	SH/SA ..47	SH/SA ..57	SH/SA ..67	SH/SA ..77	SH/SA .. 87	SH/SA ..97
G4 in mm	59	78	88	100	121	164	185
WH In mm	88	95	111.5	123	147	176	204.5
X in mm	1	0	1.5	3	1	0	0.5
Y in mm	53	75	83	93	114	159	174

SPIROPLAN® right-angle gearmotors	WH/WA ..29	WH/WA ..39
Part number	10684158	10684166
G4 in mm	62	68
WH in mm	83	90
X in mm	2	4
Y in mm	50	60

Part numbers and dimensions for fixed sheet metal covers

19 004 00 18

FT../FH../FA..

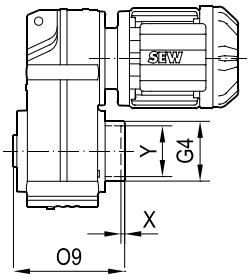

KT../KH../KA..

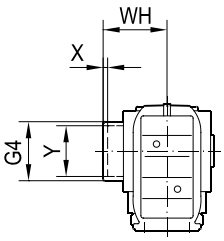

ST../SH../SA..

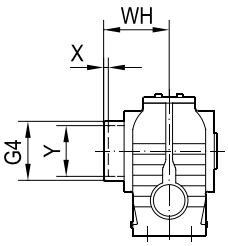

WT../WH../WA..

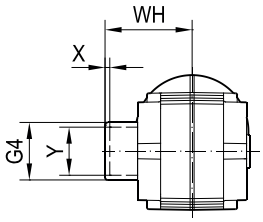

Parallel-shaft helical gearmotors	FT/FH/FA ..37	FT/FH/FA ..47	FT/FH/FA ..57	FT/FH/FA ..67	FT/FH/FA ..77	FT/FH/FA ..87	FT/FH/FA ..97	FT/FH/FA ..107	FT/FH/FA ..127	FT/FH/FA ..157
Part number	0643584X	06435858	06435866	06435866	06435874	06435882	06435890	06421814	06421822	06421830
G4 in mm	81	90	101	101	124	165	200	196	229	275
O9 in mm	166	199	222	236	285	322	382	421	502	605
X in mm	1.5	1.5	1.5	1.5	1.5	1.5	1.5	1.5	1.5	1.5
Y in mm	78	87	98	98	121	162	197	193	226	272

Helical-bevel gearmotors	KH/KA ..19	KT..19	KH/KA ..29	KT..29	KT/KH/KA ..39	KT/KH/KA ..49
Part number	29225299	29225299	10686339	29225086	10682651	10682694
G4 in mm	61	61	68	70	86	97
WH in mm	87	87	91.5	98.5	117.5	138

Helical-bevel gearmotors	KH/KA ..19	KT..19	KH/KA ..29	KT..29	KT/KH/KA ..39	KT/KH/KA ..49
X in mm	1.5	1.5	1	1.5	1	1
Y in mm	58	58	66	67	84	95

Helical-bevel gearmotors[1]	KT/KH/KA ..37	KT/KH/KA ..47	KT/KH/KA ..57	KT/KH/KA ..67	KT/KH/KA ..77	KT/KH/KA ..87	KT/KH/KA ..97	KT/KH/KA ..107	KT/KH/KA ..127	KT/KH/KA ..157
Part number	0643584X	06435858	06435866	06435866	06435874	06435882	06435890	06421814	06421822	06421849
G4 in mm	81	90	101	101	124	165	200	196	229	275
WH in mm	104	122	137	143	177	229	382	246	297	375
X in mm	1.5	1.5	1.5	1.5	1.5	1.5	1.5	1.5	1.5	1.5
Y in mm	78	87	98	98	121	162	197	193	226	272

1 Not possible for helical-bevel gear units with hollow shaft in foot-mounted design (KH..B and KA..B).

Helical-worm gearmotors	ST/SH/SA ..37	ST/SH/SA ..47	ST/SH/SA ..57	ST/SH/SA ..67	ST/SH/SA ..77	ST/SH/SA ..87	ST/SH/SA ..97
Part number	06444768	0643584X	06435858	06435866	06435874	06435882	06435882
G4 in mm	64	81	90	101	124	165	165
WH in mm	98	104	122	137	177	203	223
X in mm	1.5	1.5	1.5	1.5	1.5	1.5	1.5
Y in mm	61	78	87	98	121	162	162

SPIROPLAN® right-angle gearmotors	WH/WA ..29	WT ..29	WH/WA ..39	WT ..39	WT/WH/WA ..49	WT/WH/WA ..59
Part number	10686320	29225299	10686339	29225086	29225612	29226147
G4 in mm	60	61	68	70	87	97
WH in mm	84.5	87	91.5	98	119	138
X in mm	1.5	1.5	1.5	1.5	1.5	1.0
Y in mm	50	58	60	67	84	95

Part numbers and dimensions for flat fixed plastic covers

19 003 00 18

FA../FV..

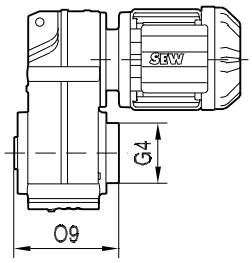

KA../KV..

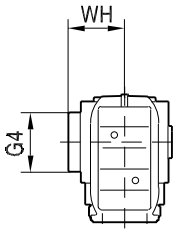

SA..

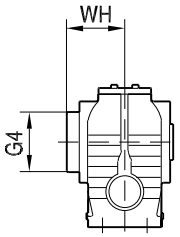

WA..

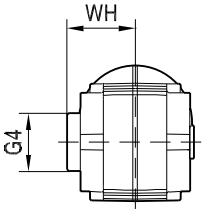

Parallel-shaft helical gearmotors	FA/FV..27	FA/FV..37	FA/FV..47	FA/FV..57	FA/FV..67	FA/FV..77	FA/FV..87	FA/FV..97
Part number	10688684	10688293	10688390	10688498	10688498	10688595	10688692	10688781
G4 in mm	57.4	80.4	80.4	84.7	84.7	117.4	147.5	187.4
O9 in mm	111	134	163	179	193	223	251	313

Helical-bevel gearmotors	KA ..19	KA ..29	KA ..39	KA ..49
Part number	10688684	10688293	10688498	10688498
G4 in mm	57.4	80.4	84.7	84.7
WH in mm	63.2	73.5	90	102

Helical-bevel gearmotors[1]	KA/KV..37	KA/KV..47	KA/KV..57	KA/KV..67	KA/KV..77	KA/KV..87	KA/KV..97
Part number	10688293	10688390	10688498	10688498	10688595	10688692	10688781
G4 in mm	80.4	80.4	84.7	84.7	117.4	147.5	187.4
WH in mm	72.5	87	95	101.5	116	131	161

1 Not possible for helical-bevel gear units with hollow shaft in foot-mounted design (KH..B and KA..B).

Helical-worm gearmotors	SA..37	SA..47	SA..57	SA..67	SA..77	SA..87	SA..97
Part number	10687890	10688293	10688390	10688498	10688595	10688692	10688781
G4 in mm	57.4	80.4	80.4	84.7	117.4	147.5	187.4
WH In mm	68	72.5	87	95.5	116	135	155

SPIROPLAN® right-angle gearmotors	WA..10	WA..19	WA..20	WA..29	WA..30	WA ..39	WA ..49	WA ..59
Part number	10687998	10687998	10687998	10688684	10688099	10688293	10690794	10690794
G4 in mm	42.4	42.4	42.4	57.4	57.4	80.4	87.4	87.4
WH in mm	51	58.5	58.5	63.2	69	73.5	90	102

2.7.13 Technical data of condition monitoring

Information on the vibration monitoring system /DUV40A

Scope of delivery

- Device DUV40A with integrated DUV Analyzer software
- User documentation DUV40A and DUV Analyzer on CD-ROM
- SmartUtility Light software with user documentation on CD-ROM

Technical data

DUV40A (Diagnostic Unit Vibration)	
Housing	Glass fiber reinforced plastic
Fastening	Hexagon socket head screw M6 × 45 Contact surface on the machine: 25 mm Ø
Current consumption	< 200 mA at 24 V
Ambient temperature	-20 to +70 °C
Internal operating temperature	-20 to +85 °C
Voltage supply	DC 11 – 32 V or Power over Ethernet (PoE) based on 802.3af Mode A
Size	44 mm × 57 mm × 55 mm
Weight	Approx. 210 g
Degree of protection	IP 67
Operating system	Embedded Linux
Software	SmartWeb (Mozilla Firefox ESR 38 (recommended), Internet Explorer 11, Internet Explorer 9 is not recommended for performance reasons) SmartUtility Light or optionally SmartUtility Languages: German, English, Chinese, Spanish, and French
Internal sensor technology	
Vibration	Acceleration sensor (piezoelectric sensor) Frequency range 0.8 Hz to 10 kHz Measuring range ±50 g
Temperature	Measuring range -20 to +70 °C
Measurement	
Measurement functions	Acceleration Speed and distance by integration System temperature Process parameters (e.g. speed, load, pressure)
Diagnostic procedure	Time signal, envelope, spectrum and trend analysis, rotational speed and frequency tracking

Characteristic values (time and frequency range)	
Defined characteristic values	DIN/ISO 20816
Calculated characteristic values	RMS, frequency-selective RMS, direct component, peak, peak-to-peak, crest factor, condition guard Other user-defined characteristic values are possible.

Signal processing	
Frequency resolution	1600, 3200, 6400 or 12800 lines
Measurement resolution	24 bit (A/D converter)
Frequency range	0.8 Hz – 10 kHz
Low passes	50 Hz – 10 kHz (50 Hz, 100 Hz, 200 Hz, 500 Hz, 1 kHz, 2 kHz, 5 kHz, 10 kHz)
High passes (only envelope)	750 Hz, 1 kHz, 2 kHz (other filters on request)

Memory/storage	
Program and data	64 MB RAM, 128 MB Flash

Inputs and outputs	
Inputs	**2 analog inputs** (0 – 10 V / 0 – 24 V / 0 – 20 mA / 4 – 20 mA), frequency range 0 – 500 Hz, 12 Bit **1 digital input** (0 – 30 V, 0.1 Hz – 1 kHz)
Outputs	**1 analog output** (0 – 10 V / -20 mA / 4 – 20 mA), 12 bit **1 switching output** (open collector, max. 1 A, 28 V)

Interfaces	
Control elements	2 capacitive pushbuttons (learning mode, alarm reset, restart, factory settings)
Display elements	1 LED to display status and alarm 1 LED to acknowledge the pushbuttons 2 LEDs to display communication
Communication	Ethernet 100 Mb/s OPC UA (server)
Electrical connections	3 polarity reversal-protected M12 connectors for supply, inputs/outputs and Ethernet

Part numbers

	Description	Part number
Sensor	DUV40A (Diagnostic Unit Vibration)	19175892
Cable	Voltage supply cable 8-pin for SmartCheck, 5 m [1]; M12(B) <-> open end	19179596
Cable	Ethernet cable for SmartCheck, 5 m [1]; M12 <-> RJ45	19179618
Cable	I/O cable 8-pin for SmartCheck, 5 m [1]; M12(St) <-> open end	19179626

1 Also available in lengths of 10 m and 20 m.

	Description	Part number
Base for mounting to standard gear units (R, F, K, and S gear units)	Mounting base with M10 × 1 sealing ring	20593422
	Mounting base with M12 × 1.5 sealing ring	20593430
	Mounting base with M22 × 1.5 sealing ring	20593449
	Mounting base with M33 × 2 sealing ring	20593457
	Mounting base with M42 × 2 sealing ring	20593465

	Description	Part number
Base for mounting to industrial gear units	Mounting base with sealing ring G3/4"	20593384
	Mounting base with sealing ring G1"	20593392
	Mounting base with sealing ring G1 1/4"	20593406
	Mounting base with sealing ring G1 1/2"	20593414

	Description	Part number
Base for mounting to standard motors	Mounting base M5	21014175
	Mounting base M6	21014167
	Mounting base M8	20593503
	Mounting base M10	21014248
	Mounting base M12	20593473
	Mounting base M16	20593481
	Mounting base M20	20593511

2.7.14 Pt1000 temperature sensor

The optional Pt1000 temperature sensor (part number 13438816) is used to continuously measure the gear unit oil temperature.

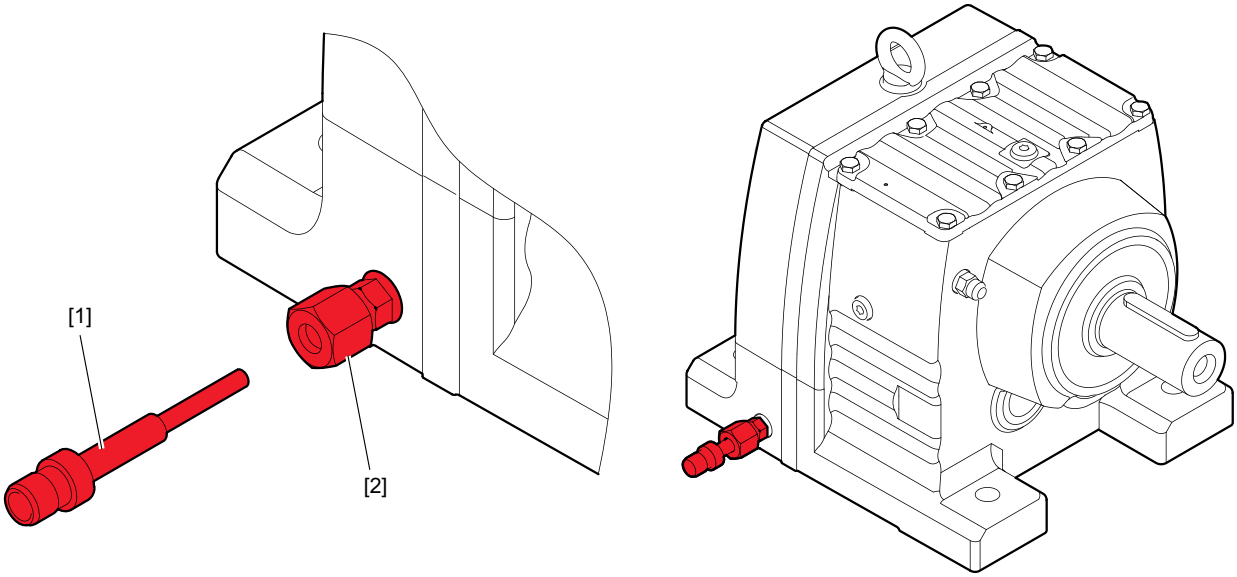

[1] Temperature sensor
[2] Adapter screw fitting

The temperature sensor [1] is delivered in mounted condition. The sensor is attached to the gear unit by means of an adapter screw fitting [2] in the corresponding screw plug bore.

For using the temperature sensor in potentially explosive areas, observe the corresponding information in the "Explosion-Protected Gear Units" assembly and operating instructions (Mechanical installation → Optional equipment).

Dimension drawing Pt1000

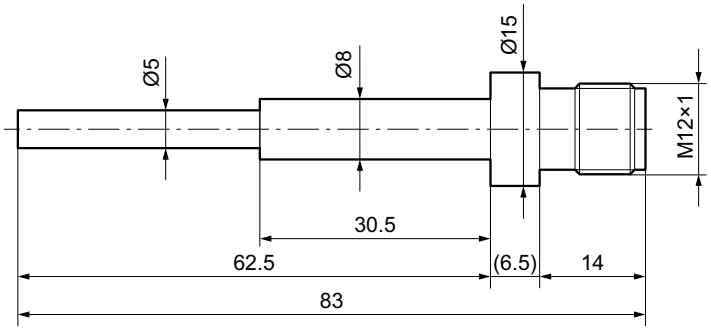

Technical data Pt1000

Technical data	Value
Bar length	62.5 mm
Measuring range	-40 to 130 °C
Permitted oil temperature	-40 to 130 °C
Accuracy	± (Pt1000 + 0.2 K)
Measuring element	1 × Pt1000 to DIN EN 60751, class B, 4-wire connection
Dynamic response T05/T09 (s)	3/8 to DIN EN 60751
Ambient temperature	-25 to 80 °C
Degree of protection, protection class	IP67, III
Housing materials	V4A (1.4404)
Materials in contact with the medium	V4A (1.4404)
Connection	M12 plug-in connection; gold-plated contacts

2.7.15 Agitator designs

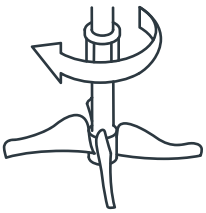

All gear units in agitator design are equipped with an extended bearing hub especially suitable for mixing and agitating applications. Agitator gear units are based on 3 proven standard gear unit series by SEW-EURODRIVE. Almost any agitating, mixing, blending, or kneading application from a wide range of industries is covered by one of the agitator designs of the gear unit.

For project planning, contact SEW-EURODRIVE.

Advantages of agitator gear units

- FEM-optimized housing and a special agitator flange for particularly high permitted overhung loads
- No additional bearing for the agitator shaft required
- Shaft and flange dimensions are compatible with standard dimensions.
- Many options and design variants for optimal adaptation to the application
- Gear units/gearmotors also available in explosion-protected design
- Global service provided by SEW-EURODRIVE

	Helical gear units RM.. series (2 and 3 stages)	**Parallel-shaft helical gear units FM../FAM.. series (2 and 3 stages)**	**Helical-bevel gear units KM../KAM.. series (3 stages)**
Sizes	57 / 67 / 77 / 87 / 97 / 107 / 127 / 137 / 147 / 167	67 / 77 / 87 / 97 / 107 / 127 / 157	67 / 77 / 87 / 97 / 107 / 127 / 157
Gear unit ratio i	4.29 – 289.74	3.87 – 281.71	5.20 – 197.37
Maximum output torque in Nm	450 – 20000	870 – 20000	870 – 20000
Maximum permitted output overhung load in N	4000 – 49600	35000 – 135000	20000 – 135000

Available options

- Double oil seal on the output end for additional protection against leakage.
- Grease nipple for relubrication of output shaft bearings
- The gear units use series housings and series gearing components. The special flange is bolted to the output end of the standard gear unit.
- Energy efficiency classes IE1 – IE4 for gearmotors
- Motor power range of 0.12 to 200 kW.
- AMS.. motor adapter for mounting IEC and NEMA motors

Also available for the FM../FAM... and KM../KAM.. series:

- Reinforced bearings also opposite the output end. These increase the permitted overhung load, particularly for high output speeds and low gear ratios.
- Drywell design with leak sensor prevents the product from being contaminated by leaking lubricant.

2.7.16 Sealing systems

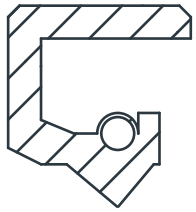

SEW-EURODRIVE offers sealing systems suitable for different ambient conditions and applications.

Input seals

Sealing system	Recommended use	Sealing system design	Recommended maintenance interval	Material
NBR Standard sealing system	▪ Speeds up to 1800 min^{-1} ▪ Temperature range -40 °C to +80 °C	Oil seal according to Fig. 1	≈ 10 000 h	High-quality NBR (nitrile butadiene rubber)[1]
FKM Sealing system for increased rotational speeds and/or increased temperatures	▪ Speeds up to 4500 min^{-1} ▪ Temperature range -25 °C to +115 °C ▪ S3 operation (high switching frequencies)	Oil seal with optimization based on Fig. 1	≈ 10 000 h	High-quality FKM (fluorocarbon rubber mixture)[1]
Premium Sine Seal[2] Premium sealing system for longer service life	▪ Speeds up to 4500 min^{-1} ▪ Temperature range -25 °C to +115 °C ▪ S3 operation (high switching frequencies) ▪ Extended maintenance interval ▪ Especially recommended with CLP PG NSF H1 lubricants ▪ Especially recommended with GearOil by SEW-EURODRIVE	Premium Sine Seal according to Fig. 2	≈ 20 000 h	High-quality FKM (fluorocarbon rubber mixture)[1]
Premium Sine Seal conductive[2] Premium sealing system for longer service life with electrically conductive fleece to suppress bearing currents	▪ Speeds up to 4500 min^{-1} ▪ Temperature range -25 °C to +115 °C ▪ S3 operation (high switching frequencies) ▪ Current passage in the motor bearings	Premium Sine Seal with electrically conductive properties based on Fig. 3	≈ 20 000 h	High-quality FKM (fluorocarbon rubber mixture)[1], fleece with electrically conductive properties

Sealing system	Recommended use	Sealing system design	Recommended maintenance interval	Material
	▪ Especially recommended with GearOil by SEW-EURODRIVE			

1 Nitrile butadiene rubber and fluorocarbon rubber in accordance with SEW-EURODRIVE specification 97 118_15.

2 Premium Sine Seal is designated only for the A-side of the motor. An FKM oil seal is used on the B-side.

= Oil side

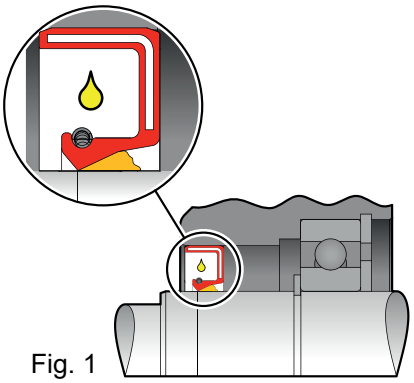

Fig. 1

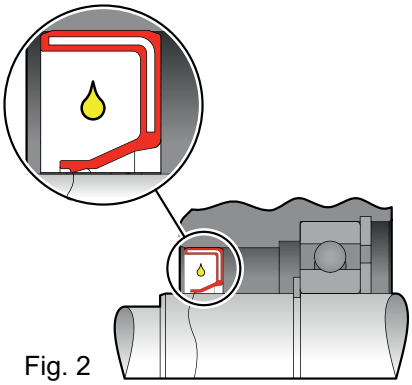

Fig. 2

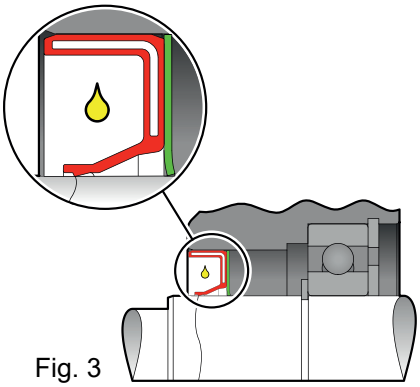

Fig. 3

Output seals

Sealing system	Recommended use	Sealing system design	Recommended maintenance interval	Material
NBR Standard sealing system	▪ Temperature range -40 °C to +80 °C ▪ Moderate ambient conditions	Oil seal with dust lip according to Fig. 4	≈ 10 000 h	High-quality NBR (nitrile butadiene rubber)[1]
FKM Sealing system for elevated temperatures	▪ Temperature range -25 °C to +115 °C ▪ S3 operation (high switching frequencies) ▪ Moderate ambient conditions	Oil seal with dust lip according to Fig. 4	≈ 10 000 h	High-quality FKM (fluorocarbon rubber mixture)[1]
NBR/FKM Combination seal – premium sealing system for longer service life, especially at low temperatures	▪ Temperature range -40 °C to +80 °C ▪ Moderate ambient conditions ▪ Extended maintenance interval ▪ Especially recommended with GearOil by SEW-EURODRIVE	Combination seal comprising NBR oil seal with dust lip and FKM sine seal according to Fig. 5	≈ 20 000 h	High-quality NBR in combination with high-quality FKM (fluorocarbon rubber mixture)[1]
FKM/FKM	▪ Temperature range -25 °C to +115 °C	Combination seal comprising FKM oil seal with dust lip and FKM sine seal according to Fig. 5	≈ 20 000 h	High-quality FKM (fluorocarbon rubber mixture)[1]

Sealing system	Recommended use	Sealing system design	Recommended maintenance interval	Material
Combination seal – premium sealing system for longer service life at elevated temperatures	▪ S3 operation (high switching frequencies) ▪ Moderate ambient conditions ▪ Extended maintenance interval ▪ Especially recommended with CLP PG NSF H1 lubricants ▪ Especially recommended with GearOil by SEW-EURODRIVE			
FKM + fleece On request: Sealing system for very demanding ambient conditions	▪ Temperature range -25 °C to +115 °C ▪ S3 operation (high switching frequencies) ▪ Abrasive and damp ambient conditions	Oil seal with dust lip and fleece disk based on Fig. 6	≈ 10 000 h	High-quality FKM (fluorocarbon rubber mixture)[1] + special fleece

1 Nitrile butadiene rubber and fluorocarbon rubber in accordance with SEW-EURODRIVE specification 97 118_15.

= Oil side

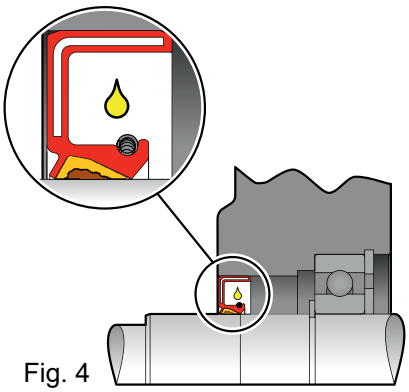

Fig. 4

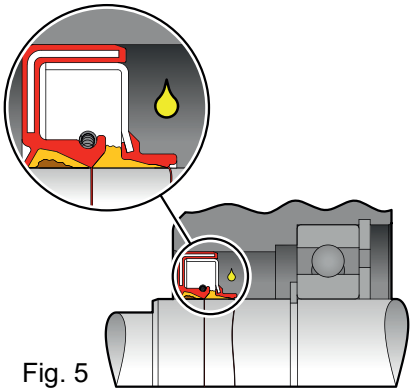

Fig. 5

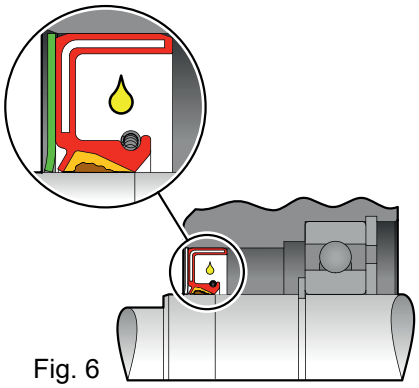

Fig. 6

2.7.17 Adapters for mounting IEC and NEMA motors

Description of AMS.. adapters

AMS.. adapters are used for mounting motors in accordance with IEC standard or NEMA (type C or TC) to SEW-EURODRIVE helical gear units, parallel-shaft helical gear units, helical-bevel gear units, helical-worm gear units, and SPIROPLAN® right-angle gear units.

Adapters are available for sizes 63 to 280 for IEC motors. Adapters are available for sizes 56 to 365 for NEMA motors.

The designation of the adapter size corresponds to the respective IEC or NEMA motor size.

The torque transmission between motor and gear unit is applied via a positive and puncture-proof claw coupling. Vibrations and shocks occurring during operation are effectively attenuated by an inserted polyurethane girth gear.

An extended adapter is used for certain AMS.. adapter combinations with parallel-shaft helical gear units to avoid collisions with the safety cover. This changes dimension Z5, see dimension sheet Dimensional deviations for certain AMS.. adapter combinations with parallel-shaft helical gear units.

AMS.. adapter with drain hole option (DH)

The drain hole option is only available for the M4 mounting position. It is recommended if moisture or liquids (water) can enter the adapter space due to external influences. The design provides 4 drain holes around the circumference of the spacer ring for this case. Incoming liquids encounter the installed oil flinger, which transports the liquids to the outside due to rotary motion. The medium can run off to the outside through the drainage slope when in idle state.

AMS.. adapter with backstop option (RS)

If the application requires only one permitted direction of rotation, the AMS.. adapter can be configured with an integrated backstop. Backstops with centrifugal lift-off sprags are used. The advantage of this design is that the sprags move around inside the backstop without making contact above a certain speed (lift-off speed). This means the backstops operate wear-free, without losses, maintenance-free and are suited for high speeds.

The backstop is completely integrated in the adapter.

Dimension sheets of AMS.. adapters

Key

01 196 00 20

AMS.. (IEC)

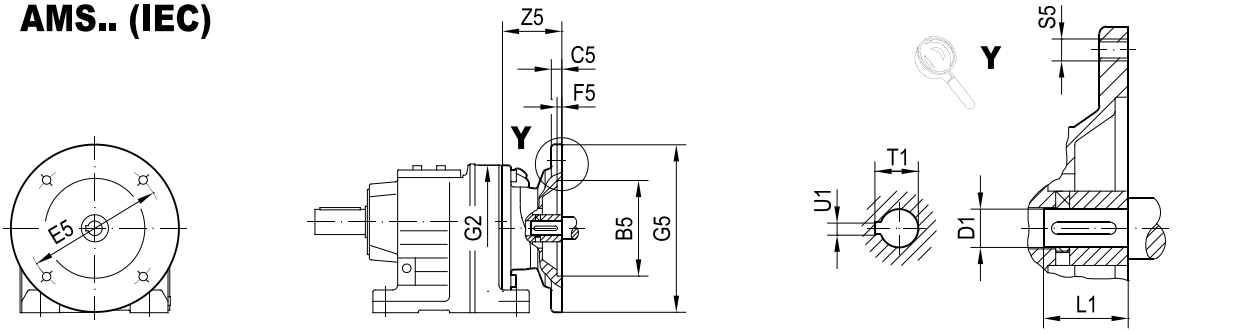

AMS.. (NEMA)

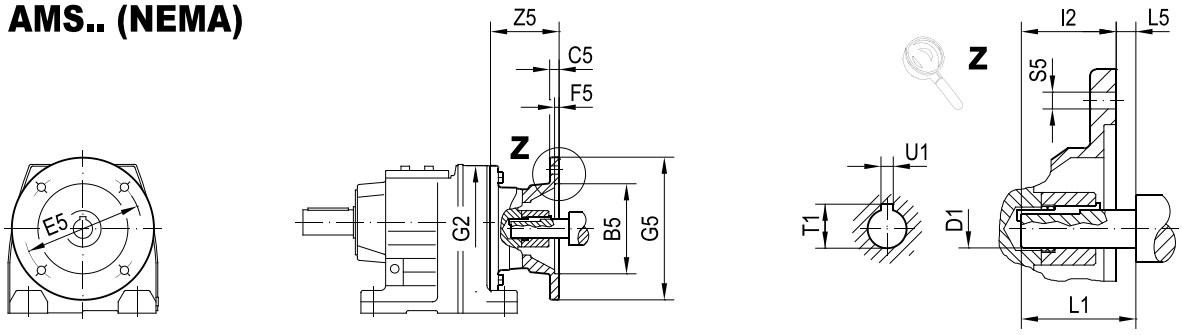

B5 Center bore diameter
C5 Flange thickness

D1	Coupling bore diameter
E5	Hole circle diameter
F5	Centering depth
G2	Gear unit input end flange diameter
G5	Adapter flange diameter
I2	Maximum insertion depth in adapter
L1	Shaft end length (motor)
L5	Shaft collar length to flange surface
S5	Tapped hole
T1	Keyway depth
U1	Keyway width
Z5	Adapter length

Adapters for mounting IEC motors

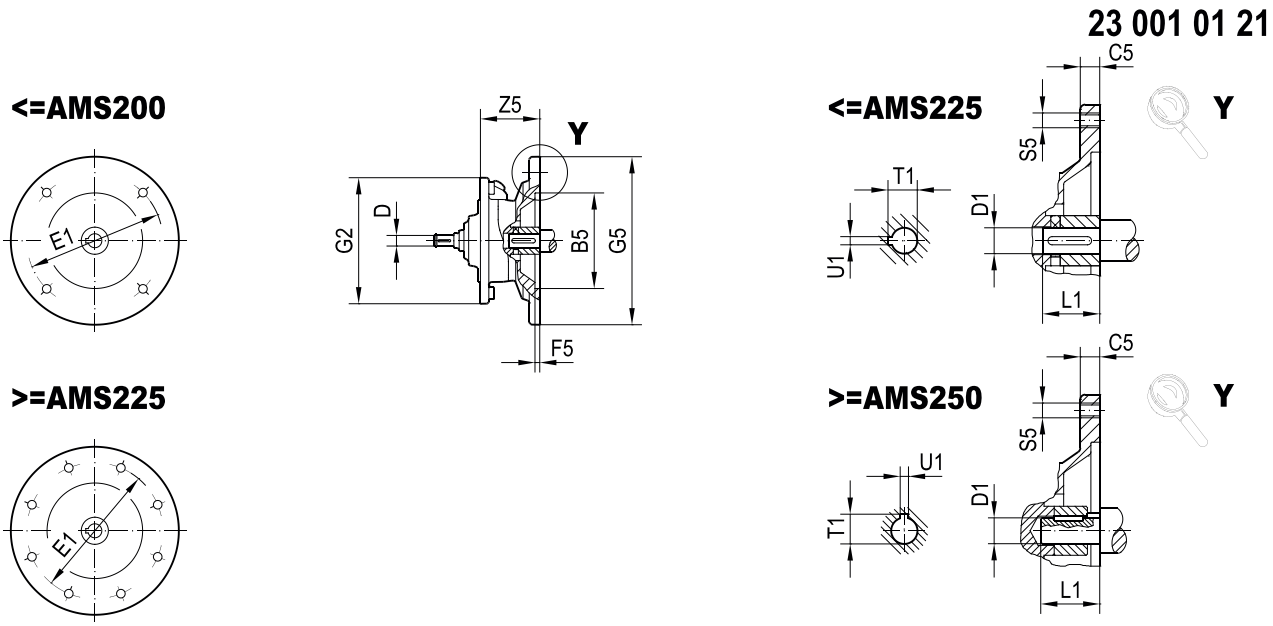

Gear unit type	Adapter type	Dimensions in mm												
		B5	C5	D	D1	E5	F5	G2	G5	L1	S5	T1	U1	Z5[1]
R..07, R..17 W..19	AMS63[2]	95	10	10	11	115	3.5	105	140	23	M8	12.8	4	56.5
	AMS71[2]	110	10	10	14	130	4	105	160	30	M8	16.3	5	56.5
	AMS80[2]	130	12	12	19	165	4.5	105	200	40	M10	21.8	6	73.5
R..27, R..37	AMS63	95	10	10	11	115	3.5	120	140	23	M8	12.8	4	56.5
F..27, F..37, F..47	AMS71[3]	110	10	10	14	130	4	120	160	30	M8	16.3	5	56.5
K..19, K..29, K..37	AMS80[2, 3]	130	12	12	19	165	4.5	120	200	40	M10	21.8	6	73.5
S..37, S..47, S..57 S..37p, S..47p, S..57p W..29, W..39	AMS90[2, 3]	130	12	14	24	165	4.5	120	200	50	M10	27.3	8	86.5
RX..57, RX..67	AMS63	95	10	10	11	115	3.5	160	140	23	M8	12.8	4	50
R..47, R..57, R..67	AMS71	110	10	10	14	130	4	160	160	30	M8	16.3	5	50
F..57, F..67	AMS80[4]	130	12	12	19	165	4.5	160	200	40	M10	21.8	6	67
K..39, K..47, K..57, K..67	AMS90[4]	130	12	14	24	165	4.5	160	200	50	M10	27.3	8	80

Gear unit type	Adapter type	Dimensions in mm												
		B5	C5	D	D1	E5	F5	G2	G5	L1	S5	T1	U1	Z5[1]
S..67, S..67p W..49, W..59	AMS100[2,3]	180	15	16	28	215	5	160	250	60	M12	31.3	8	108.5
	AMS112[2,3]	180	15	18	28	215	5	160	250	60	M12	31.3	8	108.5
	AMS132S/M[2]	230	16	22	38	265	5	160	300	80	M12	41.3	10	134
RX..77 R..77 F..77 K..49, K..77 S..77, S..77p	AMS63	95	10	10	11	115	3.5	200	140	23	M8	12.8	4	44
	AMS71	110	10	10	14	130	4	200	160	30	M8	16.3	5	44
	AMS80	130	12	12	19	165	4.5	200	200	40	M10	21.8	6	60
	AMS90	130	12	14	24	165	4.5	200	200	50	M10	27.3	8	73
	AMS100[2]	180	15	16	28	215	5	200	250	60	M12	31.3	8	100.5
	AMS112[2]	180	15	18	28	215	5	200	250	60	M12	31.3	8	100.5
	AMS132S/M[2,3]	230	16	22	38	265	5	200	300	80	M12	41.3	10	126
	AMS132ML[2,3]	230	16	28	38	265	5	200	300	80	M12	41.3	10	126

1 For the dimensions Z5 for the RS and DH options, refer to the "Gear Units" catalog. The adapter does not have any additional length because of the reinforced bearings. An exception is the AMS80/VL adapter. It has the same length as the AMS90 adapter.

2 Dimension 1/2 G5 may protrude beyond the foot mounting surface when mounted on an R, K, S or W foot gear unit, please check.

3 For F.37/47/57/77, the adapter length Z5 may change depending on the gear unit design, see next chapter.

4 F.37/47/57/77, the adapter length Z5 may change depending on the gear unit design, see next chapter.

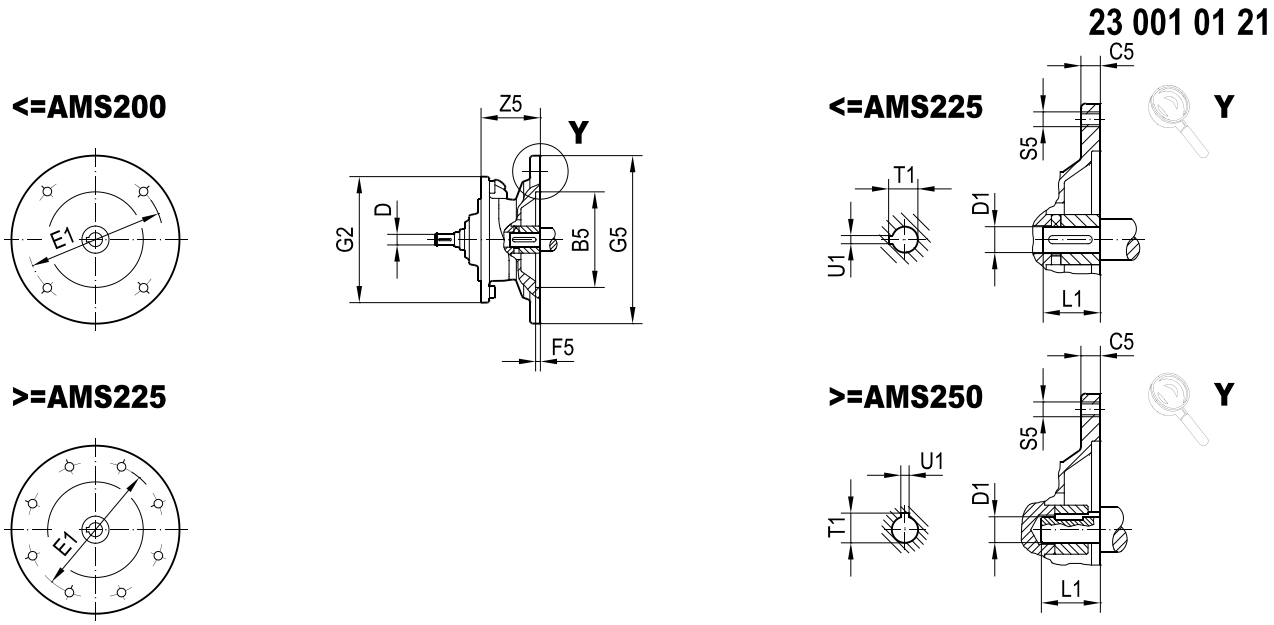

Gear unit type	Adapter type	Dimensions in mm												
		B5	C5	D	D1	E5	F5	G2	G5	L1	S5	T1	U1	Z5[1]
RX..87 R..87 F..87 K..87 S..87[2], S..87p[2)]	AMS80	130	12	12	19	165	4.5	250	200	40	M10	21.8	6	55
	AMS90	130	12	14	24	165	4.5	250	200	50	M10	27.3	8	68
	AMS100	180	15	16	28	215	5	250	250	60	M12	31.3	8	95.5
	AMS112	180	15	18	28	215	5	250	250	60	M12	31.3	8	95.5
	AMS132S/M	230	16	22	38	265	5	250	300	80	M12	41.3	10	121
	AMS132ML	230	16	28	38	265	5	250	300	80	M12	41.3	10	121
	AMS160	250	18	28	42	300	6	250	350	110	M16	45.3	12	184

Gear unit type	Adapter type	Dimensions in mm												
		B5	C5	D	D1	E5	F5	G2	G5	L1	S5	T1	U1	Z5[1]
	AMS180	250	18	32	48	300	6	250	350	110	M16	51.8	14	184
RX..97[3] R..97[3)] F..97 K..97 S..97, S..97p	AMS100	180	15	16	28	215	5	300	250	60	M12	31.3	8	90.5
	AMS112	180	15	18	28	215	5	300	250	60	M12	31.3	8	90.5
	AMS132S/M	230	16	22	38	265	5	300	300	80	M12	41.3	10	116
	AMS132ML	230	16	28	38	265	5	300	300	80	M12	41.3	10	116
	AMS160	250	18	28	42	300	6	300	350	110	M16	45.3	12	179
	AMS180	250	18	32	48	300	6	300	350	110	M16	51.8	14	179
	AMS200	300	20	38	55	350	7	300	400	110	M16	59.3	16	240
	AMS225	350	22	38	60	400	7	300	450	140	M16	64.4	18	255
RX..107 R..107, R..127 F..107 K..107	AMS100	180	15	16	28	215	5	350	250	60	M12	31.3	8	84.5
	AMS112	180	15	18	28	215	5	350	250	60	M12	31.3	8	84.5
	AMS132S/M	230	16	22	38	265	5	350	300	80	M12	41.3	10	110
	AMS132ML	230	16	28	38	265	5	350	300	80	M12	41.3	10	110
	AMS160	250	18	28	42	300	6	350	350	110	M16	45.3	12	173
	AMS180	250	18	32	48	300	6	350	350	110	M16	51.8	14	173
	AMS200	300	20	38	55	350	7	350	400	110	M16	59.3	16	234
	AMS225	350	22	38	60	400	7	350	450	140	M16	64.4	18	249
R..137	AMS132S/M	230	16	22	38	265	5	400	300	80	M12	41.3	10	103
	AMS132ML	230	16	28	38	265	5	400	300	80	M12	41.3	10	103
	AMS160	250	18	28	42	300	6	400	350	110	M16	45.3	12	166
	AMS180	250	18	32	48	300	6	400	350	110	M16	51.8	14	166
	AMS200	300	20	38	55	350	7	400	400	110	M16	59.3	16	227
	AMS225	350	22	38	60	400	7	400	450	140	M16	64.4	18	242

1 For the dimensions Z5 for the RS and DH options, refer to the "Gear Units" catalog. The adapter does not have any additional length because of the reinforced bearings. An exception is the AMS80/VL adapter. It has the same length as the AMS90 adapter.

2 Not with AMS180.

3 Not with AMS225.

23 001 01 21

<=AMS200

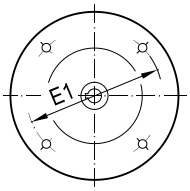

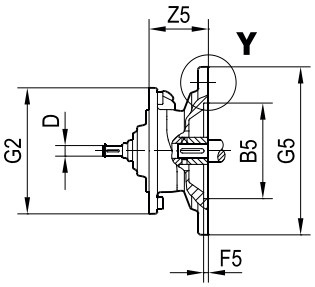

<=AMS225

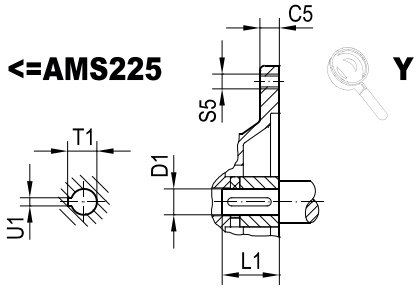

>=AMS225

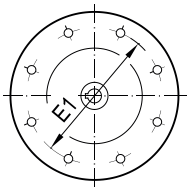

>=AMS250

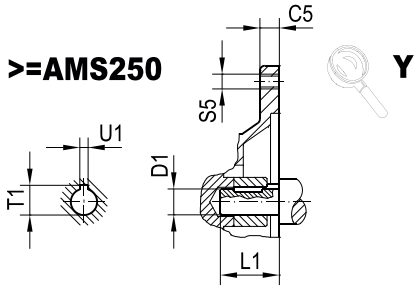

Gear unit type	Adapter type	Dimensions in mm												
		B5	C5	D	D1	E5	F5	G2	G5	L1	S5	T1	U1	Z5[1]
R..147 F..127 K..127	AMS132S/M	230	16	22	38	265	5	450	300	80	M12	41.3	10	95
	AMS132ML	230	16	28	38	265	5	450	300	80	M12	41.3	10	95
	AMS160	250	18	28	42	300	6	450	350	110	M16	45.3	12	158
	AMS180	250	18	32	48	300	6	450	350	110	M16	51.8	14	158
	AMS200	300	20	38	55	350	7	450	400	110	M16	59.3	16	219
	AMS225	350	22	38	60	400	7	450	450	140	M16	64.4	18	234
	AMS250	450	25	48	65	500	7	450	550	140	M16	69.4	18	297.5
	AMS280	450	25	48	75	500	7	450	550	140	M16	79.9	20	297.5
R..167 F..157 K..157, K..187	AMS160	250	18	28	42	300	6	550	350	110	M16	45.3	12	150
	AMS180	250	18	32	48	300	6	550	350	110	M16	51.8	14	150
	AMS200	300	20	38	55	350	7	550	400	110	M16	59.3	16	211
	AMS225	350	22	38	60	400	7	550	450	140	M16	64.4	18	226
	AMS250	450	25	48	65	500	7	550	550	140	M16	69.4	18	289.5
	AMS280	450	25	48	75	500	7	550	550	140	M16	79.9	20	289.5

1 For the dimensions Z5 for the RS and DH options, refer to the "Gear Units" catalog. The adapter does not have any additional length because of the reinforced bearings. An exception is the AMS80/VL adapter. It has the same length as the AMS90 adapter.

Adapters for mounting NEMA motors

23 002 01 21

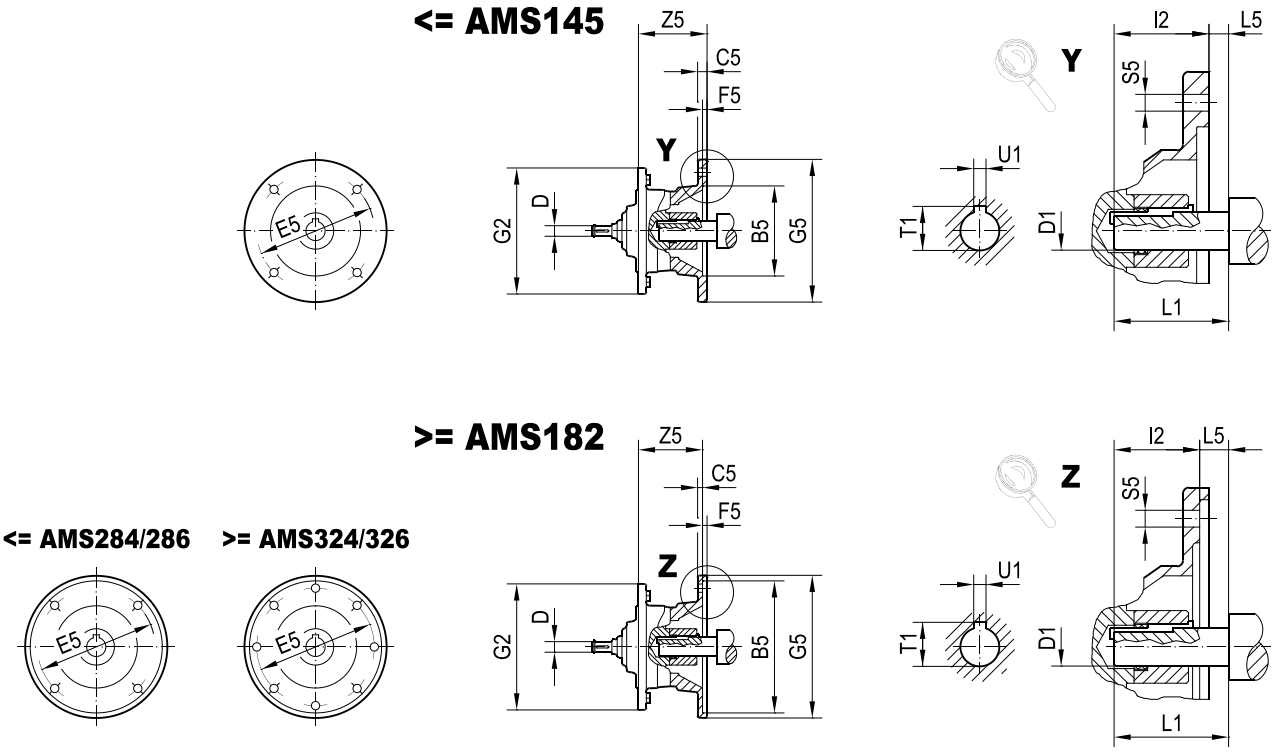

Gear unit type	Adapter type	Dimensions in mm														
		B5	C5	D	D1	E5	F5	G2	G5	I2	L1	L5	S5	T1	U1	Z5[1]
R..07 R..17 W..19	AMS56	114.3	11	10	15.875	149.2	4.5	105	170	52.3	48	-4.6	10.5	18.1	4.76	81.4
R..27, R..37 F..27,F..37,F..47	AMS56	114.3	11	10	15.875	149.2	4.5	120	170	52.3	48	-4.6	10.5	18.1	4.76	81.4
K..19, K..29, K..37 K..19, K..29, K..37 S..37, S..47, S..57	AMS143	114.3	12	12	22.225	149.2	4.5	120	170	53.9	57	3.3	10.5	24.7	4.76	93.6
S..37p,S..47p, S..57p W..29, W..39	AMS145	114.3	12	14	22.225	149.2	4.5	120	170	53.9	57	3.3	10.5	24.7	4.76	93.6
RX..57, RX..67	AMS56	114.3	11	10	15.875	149.2	4.5	160	170	52.3	48	-4.6	10.5	18.1	4.76	74.9
R..47, R..57, R..67	AMS143	114.3	12	12	22.225	149.2	4.5	160	170	53.9	57	3.3	10.5	24.7	4.76	87.1
F..57, F..67	AMS145	114.3	12	14	22.225	149.2	4.5	160	170	53.9	57	3.3	10.5	24.7	4.76	87.1
K..39, K..47, K..57, K..67	AMS182	215.9	10	16	28.575	184.0	5	160	228	66.6	70	3.3	15	31.7	6.35	114.1
S..67, S..67p	AMS184	215.9	10	18	28.575	184.0	5	160	228	66.6	70	3.3	15	31.7	6.35	114.1
W..49, W..59	AMS213/215	215.9	11	22	34.925	184.0	5	160	228	79.3	86	6.6	15	38.7	7.94	138.5

Gear unit type	Adapter type	Dimensions in mm														
		B5	C5	D	D1	E5	F5	G2	G5	I2	L1	L5	S5	T1	U1	Z5[1]
RX..77 R..77 F..77 K..49, K..77 S..77, S..77p	AMS56	114.3	11	10	15.875	149.2	4.5	200	170	52.3	48	-4.6	10.5	18.1	4.76	67.9
	AMS143	114.3	12	12	22.225	149.2	4.5	200	170	53.9	57	3.3	10.5	24.7	4.76	80.1
	AMS145	114.3	12	14	22.225	149.2	4.5	200	170	53.9	57	3.3	10.5	24.7	4.76	80.1
	AMS182	215.9	10	16	28.575	184.0	5	200	228	66.6	70	3.3	15	31.7	6.35	106.1
	AMS184	215.9	10	18	28.575	184.0	5	200	228	66.6	70	3.3	15	31.7	6.35	106.1
	AMS213/215	215.9	11	22	34.925	184.0	5	200	228	79.3	86	6.6	15	38.7	7.94	130.5
RX..87 R..87 F..87 K..87 S..87[2], S..87p[2)]	AMS143	114.3	12	12	22.225	149.2	4.5	250	170	53.9	57	3.3	10.5	24.7	4.76	75.1
	AMS145	114.3	12	14	22.225	149.2	4.5	250	170	53.9	57	3.3	10.5	24.7	4.76	75.1
	AMS182	215.9	10	16	28.575	184.0	5	250	228	66.6	70	3.3	15	31.7	6.35	101.1
	AMS184	215.9	10	18	28.575	184.0	5	250	228	66.6	70	3.3	15	31.7	6.35	101.1
	AMS213/215	215.9	11	22	34.925	184.0	5	250	228	79.3	86	6.6	15	38.7	7.94	125.5
	AMS254/256	215.9	12	28	41.275	184.0	5	250	228	95.3	102	6.4	15	45.8	9.53	184.9
	AMS284/286	266.7	15	32	47.625	228.6	5	250	286	111.3	117	6.1	15	53.4	12.7	191.5
RX..97[3] R..97[3)] F..97 K..97 S..97, S..97p	AMS182	215.9	10	16	28.575	184.0	5	300	228	66.6	70	3.3	15	31.7	6.35	96.1
	AMS184	215.9	10	18	28.575	184.0	5	300	228	66.6	70	3.3	15	31.7	6.35	96.1
	AMS213/215	215.9	11	22	34.925	184.0	5	300	228	79.3	86	6.6	15	38.7	7.94	120.5
	AMS254/256	215.9	12	28	41.275	184.0	5	300	228	95.3	102	6.4	15	45.8	9.53	179.9
	AMS284/286	266.7	15	32	47.625	228.6	5	300	286	111.3	117	6.1	15	53.4	12.7	186.5
	AMS324/326	317.5	17	38	53.975	279.4	5	300	356	127.0	133	6.4	17.5	60.0	12.7	252.4
	AMS364/365	317.5	17	38	60.325	279.4	5	300	356	142.8	149	6.6	17.5	67.6	15.88	252.4
RX..107 R..107, R..127 F..107 K..107	AMS182	215.9	10	16	28.575	184.0	5	350	228	66.6	70	3.3	15	31.7	6.35	90.1
	AMS184	215.9	10	18	28.575	184.0	5	350	228	66.6	70	3.3	15	31.7	6.35	90.1
	AMS213/215	215.9	11	22	34.925	184.0	5	350	228	79.3	86	6.6	15	38.7	7.94	114.5
	AMS254/256	215.9	12	28	41.275	184.0	5	350	228	95.3	102	6.4	15	45.8	9.53	173.9
	AMS284/286	266.7	15	32	47.625	228.6	5	350	286	111.3	117	6.1	15	53.4	12.7	180.5
	AMS324/326	317.5	17	38	53.975	279.4	5	350	356	127.0	133	6.4	17.5	60.0	12.7	246.4
	AMS364/365	317.5	17	38	60.325	279.4	5	350	356	142.8	149	6.6	17.5	67.6	15.88	246.4
R..137	AMS213/215	215.9	11	22	34.925	184.0	5	400	228	79.3	86	6.6	15	38.7	7.94	107.5
	AMS254/256	215.9	12	28	41.275	184.0	5	400	228	95.3	102	6.4	15	45.8	9.53	166.9
	AMS284/286	266.7	15	32	47.625	228.6	5	400	286	111.3	117	6.1	15	53.4	12.7	173.5
	AMS324/326	317.5	17	38	53.975	279.4	5	400	356	127.0	133	6.4	17.5	60.0	12.7	239.4
	AMS364/365	317.5	17	38	60.325	279.4	5	400	356	142.8	149	6.6	17.5	67.6	15.88	239.4
R..147 F..127 K..127	AMS213/215	215.9	11	22	34.925	184.0	5	450	228	79.3	86	6.6	15	38.7	7.94	99.5
	AMS254/256	215.9	12	28	41.275	184.0	5	450	228	95.3	102	6.4	15	45.8	9.53	158.9
	AMS284/286	266.7	15	32	47.625	228.6	5	450	286	111.3	117	6.1	15	53.4	12.7	165.5
	AMS324/326	317.5	17	38	53.975	279.4	5	450	356	127.0	133	6.4	17.5	60.0	12.7	231.4
	AMS364/365	317.5	17	38	60.325	279.4	5	450	356	142.8	149	6.6	17.5	67.6	15.88	231.4

Gear unit type	Adapter type	Dimensions in mm														
		B5	C5	D	D1	E5	F5	G2	G5	I2	L1	L5	S5	T1	U1	Z5[1]
R..167 F..157 K..157, K..167, K..187	AMS254/256	215.9	12	28	41.275	184.0	5	550	228	95.3	102	6.4	15	45.8	9.53	150.9
	AMS284/286	266.7	15	32	47.625	228.6	5	550	286	111.3	117	6.1	15	53.4	12.7	157.5
	AMS324/326	317.5	17	38	53.975	279.4	5	550	356	127.0	133	6.4	17.5	60.0	12.7	223.4
	AMS364/365	317.5	17	38	60.325	279.4	5	550	356	142.8	149	6.6	17.5	67.6	15.88	223.4

1 For the dimensions Z5 for the RS and DH options, refer to the "Gear units" catalog. The adapter does not have any additional length because of the reinforced bearings.

2 Not with AMS284/286.

3 Not with AMS364/365.

2.8 Type designation

The following table shows an example of a type designation:

K107R77 DRN100LS4/TF	
K107R77 DRN100LS4/TF	Gear unit type
K**107**R77 DRN100LS4/TF	Gear unit size
K107**R**77 DRN100LS4/TF	Gear unit type
K107R**77** DRN100LS4/TF	Gear unit size
K107R77 **DR**N100LS4/TF	Motor series
K107R77 DR**N**100LS4/TF	Code for product line identification
K107R77 DRN**100**LS4/TF	Motor size
K107R77 DRN100**LS**4/TF	Rotor length
K107R77 DRN100LS**4**/TF	Number of poles
K107R77 DRN100LS4/**TF**	Temperature sensor

Example of DRN.. double gearmotor:

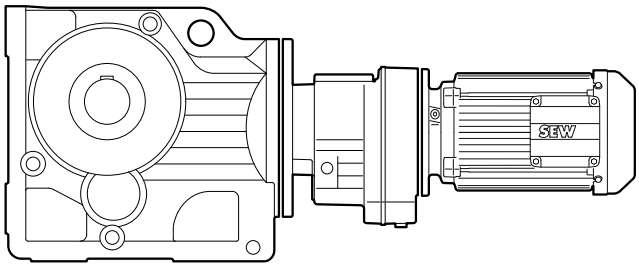

K107 R77 DRN100LS4/TF

2.9 Nameplate and product label

2.9.1 Nameplate

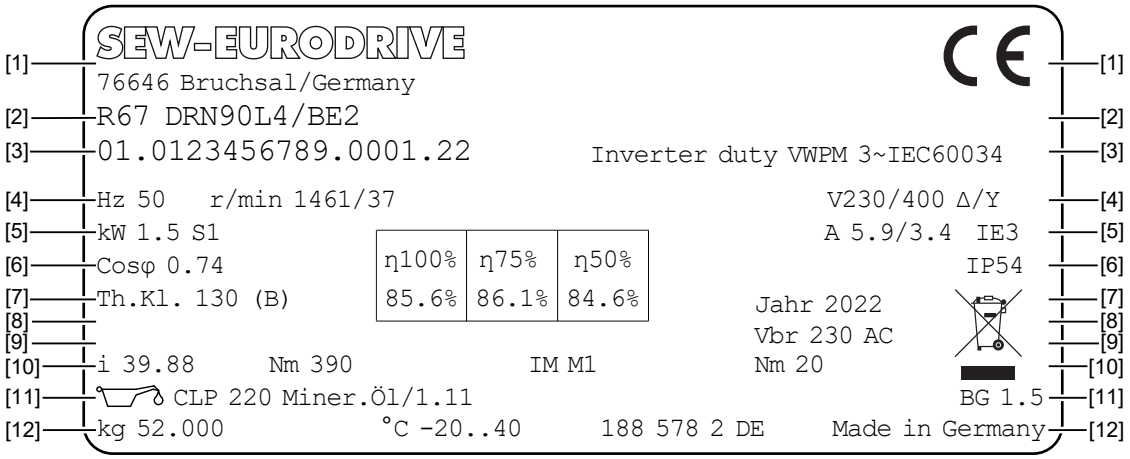

Line	Information
[1]	▪ Manufacturer, address, CE marking
[2]	▪ Type designation
[3]	▪ Serial number ▪ Suitability for inverter operation ▪ Number of phases and the underlying rating and power standard
[4]	▪ Rated frequency ▪ Rated speed of the motor / speed of the gear unit output shaft ▪ Nominal voltage
[5]	▪ Rated power, duty type ▪ Rated current ▪ Energy efficiency class according to IEC 60034-30-1
[6]	▪ Power factor ▪ Efficiency after capacity utilization of 100%, 75%, and 50% ▪ Degree of protection according to IEC/EN 60034-5
[7]	▪ Thermal class
[8]	▪ Country of manufacture
[9]	▪ Brake voltage ▪ Waste disposal according to WEEE Directive
[10]	▪ Gear unit ratio ▪ Output torque ▪ Mounting position ▪ Nominal braking torque
[11]	▪ Oil type and oil fill volume ▪ Brake control
[12]	▪ Weight of the gearmotor ▪ Permitted ambient temperature range of the motor

Line	Information
	▪ Nameplate number ▪ Country of manufacture

2.9.2 Product label



	Product label with QR code. The QR code on the product can be scanned. You will be redirected to the digital services of SEW-EURODRIVE. There, you have access to product-specific data, documents, and further services. **The product manual of the device with further information is available in the "Documentation" > "Data and documents" area.**

The QR code on the product gives you quick access to the Digital Services from SEW-EURODRIVE.

In addition to the option of scanning the QR code with the camera of your mobile device or an appropriate app, you can also use the "Product ID Plus" app from SEW-EURODRIVE. After scanning, you will see the technical data to identify the product directly.

In addition, the search for product-specific spare parts and documentation, as well as fault diagnostics and direct service requests are simple and fast.

2.10 Design types

The designs described in this chapter refer to gearmotors from SEW-EURODRIVE.

2.10.1 Helical gearmotors

The following designs of helical gearmotors are available:

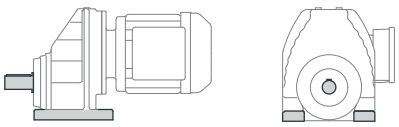

RX..DR..

Single-stage helical gearmotor in foot-mounted design

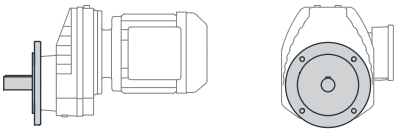

RXF..DR..

Single-stage helical gearmotor in B5 flange-mounted design

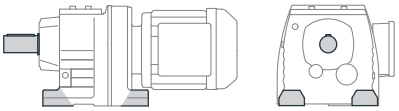

R..DR..

Helical gearmotor in foot-mounted design

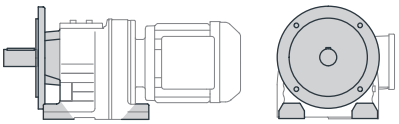

R..F DR..

Helical gearmotor in foot-mounted and B5 flange-mounted design

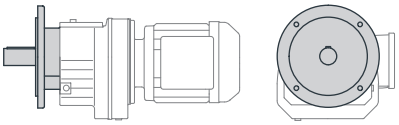

RF..DR..

Helical gearmotor in B5 flange-mounted design

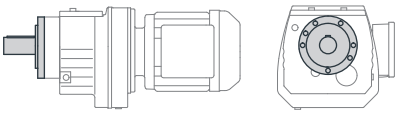

RZ..DR..

Helical gearmotor in B14 flange-mounted design

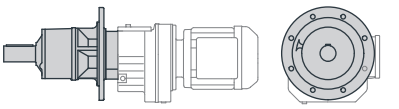

RM..DR..

Helical gearmotor in B5 flange-mounted design with extended bearing hub

2.10.2 Parallel-shaft helical gearmotors

The following designs of parallel-shaft helical gearmotors are available:

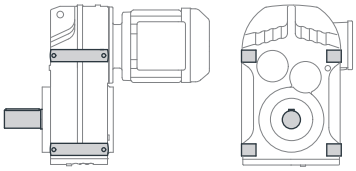

F..DR..

Parallel-shaft helical gearmotor in foot-mounted design

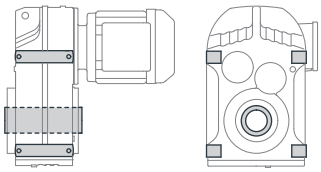

FA..B DR..

Parallel-shaft helical gearmotor in foot-mounted design with hollow shaft

FV..B DR..

Parallel-shaft helical gearmotor in foot-mounted design with splined hollow shaft according to DIN 5480

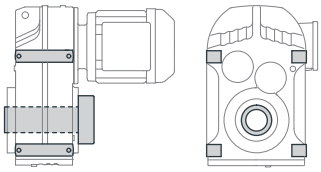

FH..B DR..

Parallel-shaft helical gearmotor in foot-mounted design with hollow shaft and shrink disk

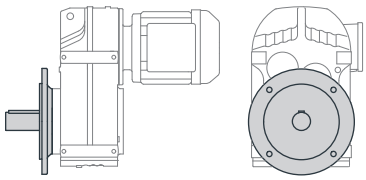

FF..DR..

Parallel-shaft helical gearmotor in B5 flange-mounted design

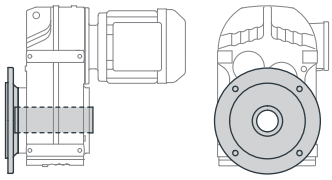

FAF..DR..

Parallel-shaft helical gearmotor in B5 flange-mounted design with hollow shaft

FVF..DR..

Parallel-shaft helical gearmotor in B5 flange-mounted design with splined hollow shaft according to DIN 5480

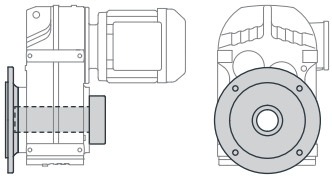

FHF..DR..

Parallel-shaft helical gearmotor in B5 flange-mounted design with hollow shaft and shrink disk

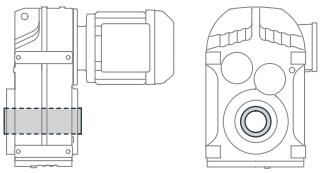

FA..DR..

Parallel-shaft helical gearmotor with hollow shaft

FV..DR..

Parallel-shaft helical gearmotor with splined hollow shaft according to DIN 5480

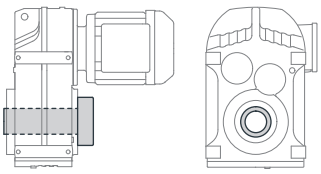

FH..DR..

Parallel-shaft helical gearmotor with hollow shaft and shrink disk

FT..DR..

Parallel-shaft helical gearmotor with hollow shaft and TorqLOC® hollow shaft mounting system

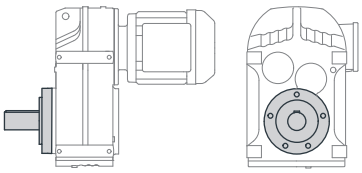

FZ..DR..

Parallel-shaft helical gearmotor in B14 flange-mounted design

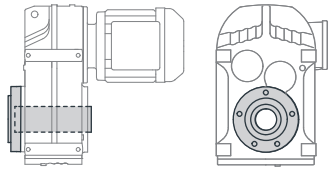

FAZ..DR..

Parallel-shaft helical gearmotor in B14 flange-mounted design with hollow shaft

FVZ..DR..

Parallel-shaft helical gearmotor in B14 flange-mounted design with splined hollow shaft according to DIN 5480

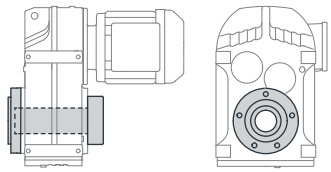

FHZ..DR..

Parallel-shaft helical gearmotor in B14 flange-mounted design with hollow shaft and shrink disk

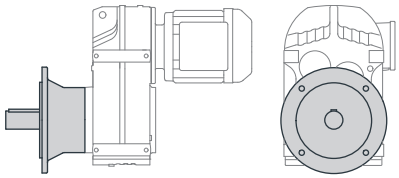

FM.. DR..

Parallel-shaft helical gearmotor in B5 flange-mounted design with extended bearing hub, output shaft with key

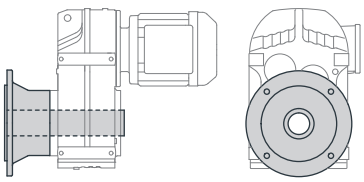

FAM.. DR..

Parallel-shaft helical gearmotor in B5 flange-mounted design with extended bearing hub and hollow shaft

2.10.3 Helical-bevel gearmotors, gear unit sizes K..19 and K..29

The following designs of helical-bevel gearmotors with gear units in sizes K..19 and K..29 are available:

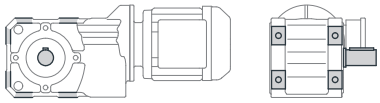

K19 DR.., K29 DR..

Helical-bevel gearmotor in foot-mounted design

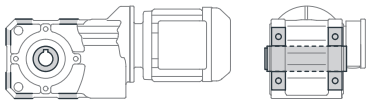

KA19B DR.., KA29B DR..

Helical-bevel gearmotor in foot-mounted design with hollow shaft in foot-mounted design

KH19B DR.., KH29B DR..

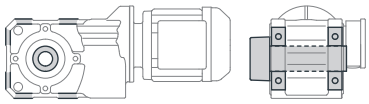

Helical-bevel gearmotor in foot-mounted design with hollow shaft and shrink disk

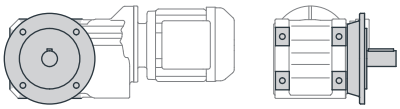

KF19B DR.., KF29B DR..

Foot-mounted helical-bevel gearmotor in B5 flange-mounted design

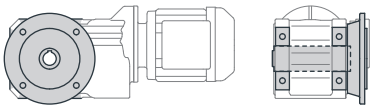

KAF19B DR.., KAF29B DR..

Helical-bevel gearmotor in B5 flange-mounted design with hollow shaft in foot-mounted design

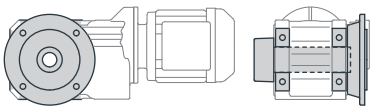

KHF19B DR.., KHF29B DR..

Helical-bevel gearmotor in B5 flange-mounted design with hollow shaft and shrink disk

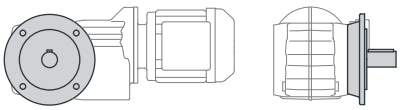

KF19 DR.., KF29 DR..

Helical-bevel gearmotor in B5 flange-mounted design

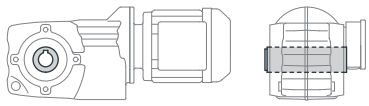

KA19 DR.., KA29 DR..

Helical-bevel gearmotor with hollow shaft

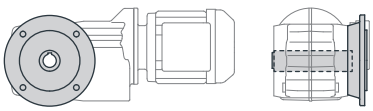

KAF19 DR.., KAF29 DR..

Helical-bevel gearmotor in B5 flange-mounted design with hollow shaft

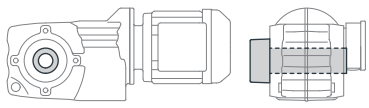

KH19 DR.., KH29 DR..

Helical-bevel gearmotor with hollow shaft and shrink disk

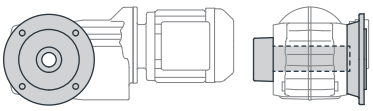

KHF19 DR.., KHF29 DR..

Helical-bevel gearmotor in B5 flange-mounted design with hollow shaft and shrink disk

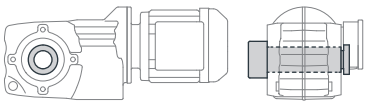

KT19 DR.., KT29 DR..

Helical-bevel gearmotor with hollow shaft and TorqLOC® hollow shaft mounting system

2.10.4 Helical-bevel gearmotors, gear unit sizes K..39 and K..49

The following designs of helical-bevel gearmotors with gear units in sizes W..39 and W..49 are available:

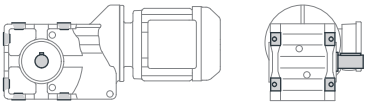

K39 DR.., K49 DR..

Helical-bevel gearmotor in foot-mounted design

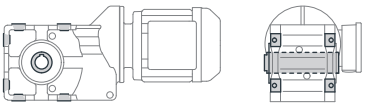

KA39B DR.., KA49B DR..

Helical-bevel gearmotor in foot-mounted design

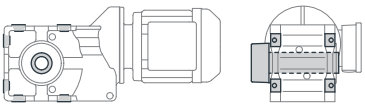

KH39B DR.., KH49B DR..

Helical-bevel gearmotor in foot-mounted design with hollow shaft and shrink disk

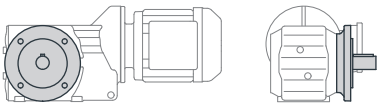

KF39 DR.., KF49 DR..

Helical-bevel gearmotor in B5 flange-mounted design

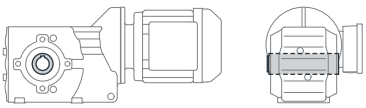

KA39 DR.., KA49 DR..

Helical-bevel gearmotor with hollow shaft

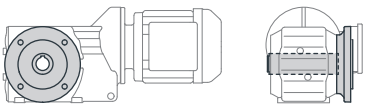

KAF39 DR.., KAF49 DR..

Helical-bevel gearmotor in B5 flange-mounted design with hollow shaft

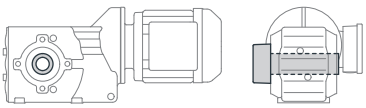

KH39 DR.., KH49 DR..

Helical-bevel gearmotor with hollow shaft and shrink disk

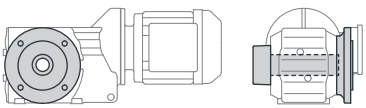

KHF39 DR.., KHF49 DR..

Helical-bevel gearmotor in B5 flange-mounted design with hollow shaft and shrink disk

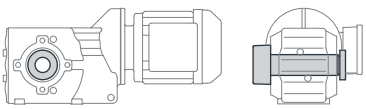

KT39 DR.., KT49 DR..

Helical-bevel gearmotor with hollow shaft and TorqLOC® hollow shaft mounting system

2.10.5 Helical-bevel gearmotors, gear unit sizes K..7

The following designs of helical-bevel gearmotors with gear units of size K..7 are available:

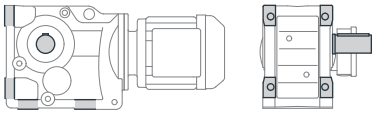

K..7 DR..

Helical-bevel gearmotor in foot-mounted design

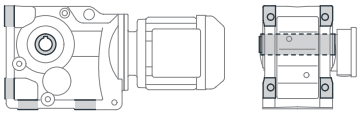

KA..7B DR..

Helical-bevel gearmotor in foot-mounted design with hollow shaft

KV..7B DR..

Helical-bevel gearmotor in foot-mounted design with splined hollow shaft according to DIN 5480

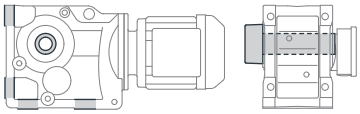

KH..7B DR..

Helical-bevel gearmotor in foot-mounted design with hollow shaft and shrink disk

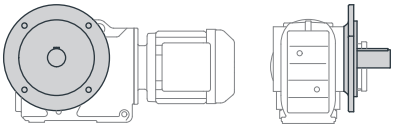

KF..7 DR..

Helical-bevel gearmotor in B5 flange-mounted design

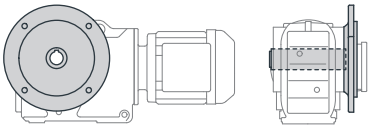

KAF..7 DR..

Helical-bevel gearmotor in B5 flange-mounted design with hollow shaft

KVF..7 DR..

Helical-bevel gearmotor in B5 flange-mounted design with splined hollow shaft to DIN 5480

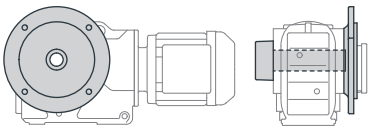

KHF..7 DR..

Helical-bevel gearmotor in B5 flange-mounted design with hollow shaft and shrink disk

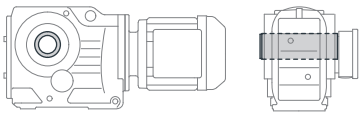

KA..7 DR..

Helical-bevel gearmotor with hollow shaft

KV..7 DR..

Helical-bevel gearmotor with splined hollow shaft according to DIN 5480

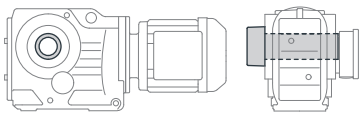

KH..7 DR..

Helical-bevel gearmotor with hollow shaft and shrink disk

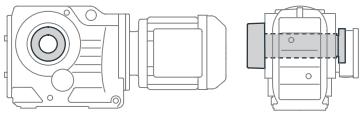

KT..7 DR..

Helical-bevel gearmotor with hollow shaft and TorqLOC® hollow shaft mounting system

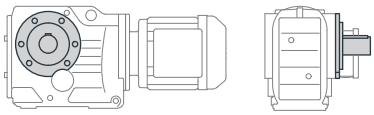

KZ..7 DR..

Helical-bevel gearmotor in B14 flange-mounted design

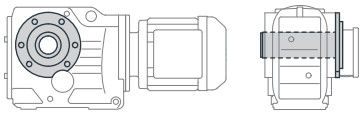

KAZ..7 DR..

Helical-bevel gearmotor in B14 flange-mounted design with hollow shaft

KVZ..7 DR..

Helical-bevel gearmotor in B14 flange-mounted design with splined hollow shaft to DIN 5480

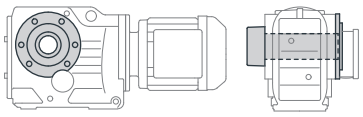

KHZ..7 DR..

Helical-bevel gearmotor in B14 flange-mounted design with hollow shaft and shrink disk

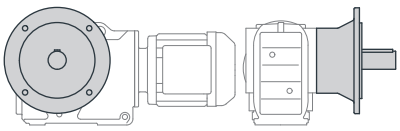

KM..7 DR..

Helical-bevel gearmotor in B5 flange-mounted design with extended bearing hub, output shaft with key

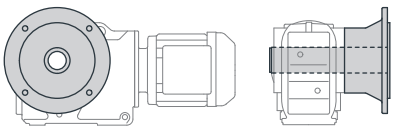

KAM..7 DR..

Helical-bevel gearmotor in B5 flange-mounted design with extended bearing hub and hollow shaft

2.10.6 Helical-worm gearmotors

The following designs of helical-worm gearmotors are available:

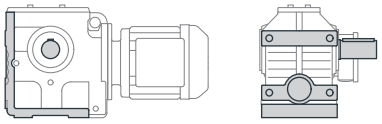

S..DR..

Helical-worm gearmotor in foot-mounted design

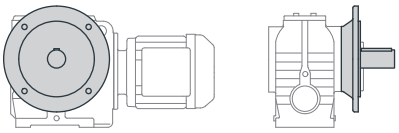

SF..DR..

Helical-worm gearmotor in B5 flange-mounted design

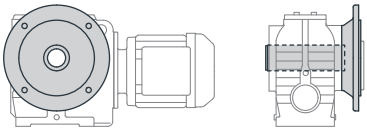

SAF..DR..

Helical-worm gearmotor in B5 flange-mounted design with hollow shaft

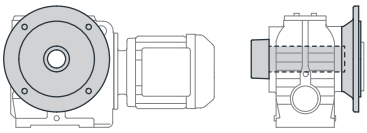

SHF..DR..

Helical-worm gearmotor in B5 flange-mounted design with hollow shaft and shrink disk

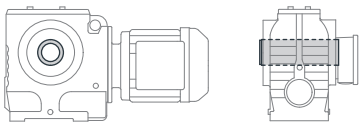

SA..DR..

Helical-worm gearmotor with hollow shaft

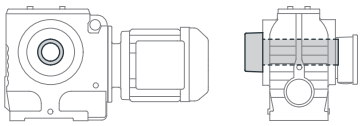

SH..DR..

Helical-worm gearmotor with hollow shaft and shrink disk

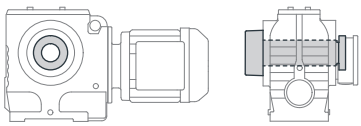

ST..DR..

Helical-worm gearmotor with hollow shaft and TorqLOC® hollow shaft mounting system

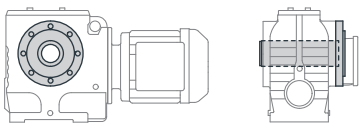

SAZ..DR..

Helical-worm gearmotor in B14 flange-mounted design with hollow shaft

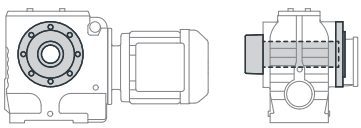

SHZ..DR..

Helical-worm gearmotor in B14 flange-mounted design with hollow shaft and shrink disk

2.10.7 SPIROPLAN® right-angle gearmotors, gear unit sizes W..10, W..20, W..30

The following designs of SPIROPLAN® right-angle gearmotors with gear units in sizes W..10, W..20, and W..30 are available:

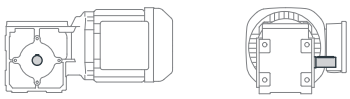

W10 DR.., W20 DR.., W30 DR..,

SPIROPLAN® right-angle gearmotor in foot-mounted design

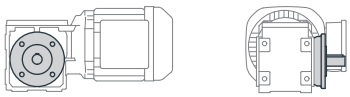

WF10 DR.., WF20 DR.., WF30 DR..

SPIROPLAN® right-angle gearmotor in B5 flange-mounted design

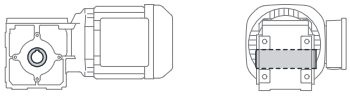

WA10 DR.., WA20 DR.., WA30 DR..

SPIROPLAN® right-angle gearmotor with hollow shaft

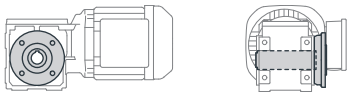

WAF10 DR.., WAF20 DR.., WAF30 DR..

SPIROPLAN® right-angle gearmotor in B5 flange-mounted design with hollow shaft

2.10.8 SPIROPLAN® right-angle gearmotors, gear unit size W..9

The following designs of SPIROPLAN® right-angle gearmotors of sizes W..9 are available:

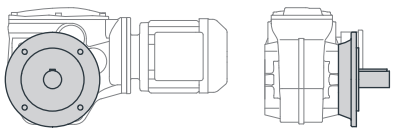

WF.9 DR..

SPIROPLAN® right-angle gearmotor in B5 flange-mounted design

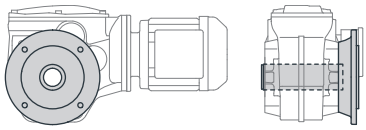

WAF.9 DR..

SPIROPLAN® right-angle gearmotor in B5 flange-mounted design with hollow shaft

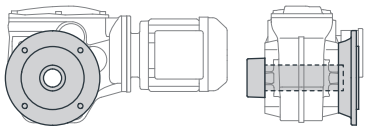

WHF.9 DR..

SPIROPLAN® right-angle gearmotor in B5 flange-mounted design with hollow shaft and shrink disk

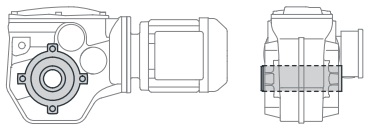

WA.9 DR..

SPIROPLAN® right-angle gearmotor with hollow shaft

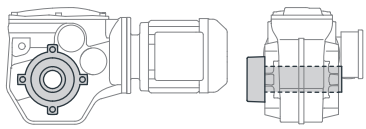

WH.9 DR..

SPIROPLAN® right-angle gearmotor with hollow shaft and shrink disk

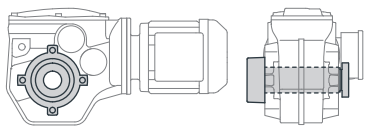

WT.9 DR..

SPIROPLAN® right-angle gearmotor with hollow shaft and TorqLOC® hollow shaft mounting system

2.10.9 SPIROPLAN® right-angle gearmotors, gear unit size W..9HG

The following designs of SPIROPLAN® right-angle gearmotors of sizes W..9HG are available:

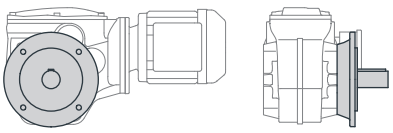

WF.9HG DR..

SPIROPLAN® right-angle gearmotor in B5 flange-mounted design

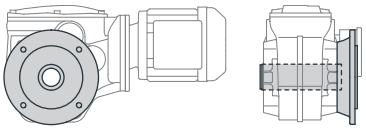

WAF.9HG DR..

SPIROPLAN® right-angle gearmotor in B5 flange-mounted design with hollow shaft

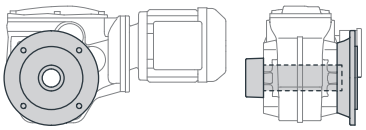

WHF.9HG DR..

SPIROPLAN® right-angle gearmotor in B5 flange-mounted design with hollow shaft and shrink disk

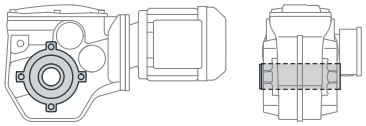

WA.9HG DR..

SPIROPLAN® right-angle gearmotor with hollow shaft

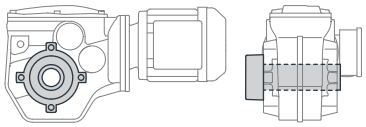

WH.9HG DR..

SPIROPLAN® right-angle gearmotor with hollow shaft and shrink disk

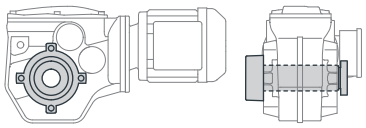

WT.9HG DR..

SPIROPLAN® right-angle gearmotor with hollow shaft and TorqLOC® hollow shaft mounting system

2.10.10 Designs and options of the gear units

Below, there is an overview of type designations for R.., F.., K.., S.., and W.. gear units and their options.

Helical gear units

Designation	Description
RX..	Single-stage foot-mounted design, output shaft with key
RXF..	Single-stage B5 flange-mounted design, output shaft with key
R..	Foot-mounted design, output shaft with key
R..F	Foot- and B5 flange-mounted design, output shaft with key
RF..	B5 flange-mounted design, output shaft with key
RZ..	B14 flange-mounted design, output shaft with key
RM..	B5 flange-mounted design with extended bearing hub, output shaft with key

Parallel-shaft helical gear units

Designation	Description
F..	Foot-mounted design, output shaft with key
FA..B	Foot-mounted design, hollow shaft with keyway
FH..B	Foot-mounted design, hollow shaft with shrink disk
FV..B	Foot-mounted design, splined hollow shaft to DIN 5480
FF..	B5 flange-mounted design, output shaft with key
FAF..	B5 flange-mounted design, hollow shaft with keyway
FHF..	B5 flange-mounted design, hollow shaft with shrink disk
FVF..	B5 flange-mounted design, splined hollow shaft according to DIN 5480
FA..	Hollow shaft with keyway
FH..	Hollow shaft with shrink disk
FT..	Hollow shaft with TorqLOC® hollow shaft mounting system
FV..	Splined hollow shaft according to DIN 5480
FZ..	B14 flange-mounted design, output shaft with key
FAZ..	B14 flange-mounted design, hollow shaft with keyway
FHZ..	B14 flange-mounted design, hollow shaft with shrink disk
FVZ..	B14 flange-mounted design, splined hollow shaft to DIN 5480
FM..	B5 flange-mounted design with extended bearing hub, output shaft with key
FAM..	B5 flange-mounted design with extended bearing hub, hollow shaft with keyway

Helical-bevel gear units

Designation	Description
K..	Foot-mounted design, output shaft with key
KA..B	Foot-mounted design, hollow shaft with keyway
KAF..B	B5 flange-mounted design, foot-mounted design, hollow shaft with keyway
KF..B	B5 flange-mounted design, foot-mounted design, output shaft with key
KH..B	Foot-mounted design, hollow shaft with shrink disk
KHF..B	B5 flange-mounted design, foot-mounted design, hollow shaft with shrink disk
KV..B	Foot-mounted design, splined hollow shaft to DIN 5480
KF..	B5 flange-mounted design, output shaft with key
KAF..	B5 flange-mounted design, hollow shaft with keyway
KHF..	B5 flange-mounted design, hollow shaft with shrink disk
KVF..	B5 flange-mounted design, splined hollow shaft to DIN 5480
KA..	Hollow shaft with keyway
KH..	Hollow shaft with shrink disk
KT..	Hollow shaft with TorqLOC® hollow shaft mounting system
KV..	Splined hollow shaft to DIN 5480
KZ..	B14 flange-mounted design, output shaft with key
KAZ..	B14 flange-mounted design, hollow shaft with keyway
KHZ..	B14 flange-mounted design, hollow shaft with shrink disk
KVZ..	B14 flange-mounted design, splined hollow shaft to DIN 5480
KM..	B5 flange-mounted design with extended bearing hub, output shaft with key
KAM..	B5 flange-mounted design with extended bearing hub, hollow shaft with keyway

Helical-worm gear units

Designation	Description
S..	Foot-mounted design, output shaft with key
SF..	B5 flange-mounted design, output shaft with key
SAF..	B5 flange-mounted design and hollow shaft with keyway
SHF..	B5 flange-mounted design and hollow shaft with shrink disk
SA..	Hollow shaft with keyway
SH...	Hollow shaft with shrink disk
ST..	Hollow shaft with TorqLOC® hollow shaft mounting system
SAZ..	B14 flange-mounted design and hollow shaft with keyway
SHZ..	B14 flange-mounted design and hollow shaft with shrink disk

SPIROPLAN® right-angle gear units

Designation	Description
W..	Foot-mounted design, output shaft with key
WF..	B5 flange-mounted design, output shaft with key
WAF..	B5 flange-mounted design and hollow shaft with keyway
WA..	Hollow shaft with keyway
WHF..	B5 flange-mounted design and hollow shaft with shrink disk
WH..	Hollow shaft with shrink disk
WT..	Hollow shaft with TorqLOC® hollow shaft mounting system

Options

R.., F.., and K..7 gear units:

Designation	Description
/R	Reduced backlash

K.., S.., and W.. gear units:

Designation	Description
/T	With torque arm

F.. gear units:

Designation	Description
/G	With rubber buffer

Condition monitoring

Designation	Description
/DUV40A	Diagnostic Unit Vibration = vibration sensor

2.10.11 Versions and options for the DRN.. motor series

The type designations of the motor series DRN.. and the designs and options are listed in the following tables.

Designation of the motors

Designation	
DR2S..	Standard motor (2nd generation) Single-speed motors meet energy efficiency class IE1.
DRN..	Motors that adhere to energy efficiency class IE3
DR2L..	Asynchronous servomotor (2nd generation)
DR2M..	Torque motor (2nd Generation)
56 – 315	Nominal sizes: 56, 63, 71, 80, 90, 100, 112, 132, 160, 180, 200, 225, 250, 280, 315
S, MK, MS, M, ME, LS, LM, L, H	Lengths
R, Q	Reduced power
P, I	Increased power
B	Non-standard power
2, 4, 6, 8, 4/2, 8/2, 8/4	Number of poles

Motor design

Designation	Description	Size
/F.A, /F.B	Universal foot-mounted motor	71MS – 132S
/F.A, /F.B	(/F.A = motor feet enclosed in delivery, /F.B = motor feet mounted at the factory)	225 – 315
/FF	IEC flange-mounted motor with through bores	63 – 315
/FE	IEC flange-mounted motor with through bores and IEC feet	63 – 315
/FT	IEC flange-mounted motor with threads	63 – 100
/FY	IEC flange-mounted motor with thread and IEC feet	63 – 100
/FC	C-face flange-mounted motor, dimensions in inches	63 – 160
/FG	Integral motor, as stand-alone motor	56 – 315
/FM	Integral motor with IEC feet	63 – 315
/FL	Flange-mounted motor (deviating from IEC)	63 – 315
/FK	Flange-mounted motor (deviating from IEC) with feet	63 – 280

Oil seals

Material

Designation	Description	Size
–	Oil seal made of NBR	56 – 315
–	Oil seal made of FKM	56 – 315

Design

Designation	Description	Size
–	Premium Sine Seal	63 – 280
–	Premium Sine Seal conductive	63 – 280

Bearings

Designation	Description	Size
/NIB	Current-insulated rolling bearings (B-side, NDE)	200 – 315
/ERF	Reinforced bearings (A-side, DE) with roller bearing	250 – 315
/NS	Relubrication device	225 – 315

Winding

Thermal class

Designation	Description	Size
–	Thermal class B	56 – 315
–	Thermal class F	56 to 315
–	Thermal class H	63 to 315

Insulation

Designation	Description	Size
/RI	Reinforced winding insulation	63 – 315
/RI2	Reinforced winding insulation with increased resistance against partial discharge	112 – 315

Condition monitoring

Thermal monitoring

Designation	Description	Size
/PI	Pt1000 temperature sensor in stator housing	56 – 315
/TF	Temperature sensor (PTC thermistor or PTC resistor)	56 to 315
/TH	Thermostat (bimetallic switch)	56 – 315
/PK	Temperature sensor Pt1000 in winding	63 – 315
/PT	Pt100 temperature sensor	63 to 315

Brake

Designation	Description	Size
/DUE	Diagnostic Unit Eddy Current = function/wear monitoring for BE1 to BE122 brake	80 to 315

Vibration

Designation	Description	Size
–	Preparation for accommodating SPM measuring nipples	112 – 315

Terminal box

Material

Designation	Description	Size
–	Aluminum terminal box	56 – 225
–	Terminal box made of gray cast iron	71 – 315

Connection

Designation	Description	Size
–	Gray cast iron terminal box with connection piece	132 – 315

Connection

Terminal board

Designation	Description	Size
–	Terminal board – 6 terminals	63 – 315
–	Terminal board – 12 terminals	71 – 280

Cage clamp terminals

Designation	Description	Size
/KCC	6-pole terminal strip with cage clamp contacts	71 – 132S
/KC1	C1 profile-compliant connection of the electrified monorail system drive (according to VDI guideline 3643)	71 – 132S
/KCW	6-pole series terminal	71 – 132S

Integrated plug connector

Designation	Description	Size
/IS	Integrated plug connector with terminal block in upper part of terminal box	63 – 132S
/ISU	Integrated plug connector without terminal block in upper part of terminal box	63 – 132S

Mounted plug connector

Designation	Description	Size
/ASE.	Mounted Han® 10ES plug connector on terminal box with single locking latch (crimp contacts on the motor side)	63 – 132M
/ASB.	Mounted Han® 10ES plug connector on terminal box with double locking latch (crimp contacts on the motor side)	63 – 132M
/ACE.	Mounted Han® 10E plug connector on terminal box with single locking latch (crimp contacts on the motor side)	63 – 132S
/ACB.	Mounted Han® 10E plug connector on terminal box with double locking latch (crimp contacts on the motor side)	63 – 132S
/AME.	Mounted Han Modular® 10B plug connector on terminal box with single locking latch (crimp contacts on the motor side)	63 – 132M
/ABE.	Mounted Han-Modular® 10B plug connector on terminal box with single locking latch (crimp contacts on the motor side)	71 – 225
/ADE.	Mounted Han Modular® 10B plug connector on terminal box with single locking latch (crimp contacts on the motor side)	71 – 225
/AKE.	Mounted Han Modular® 10B plug connector on terminal box with single locking latch (crimp contacts on the motor side)	132M – 225
/AMB.	Mounted Han-Modular® 10B plug connector on terminal box with double locking latch (crimp contacts on the motor side)	63 – 132M
/ABB.	Mounted Han-Modular® 10B plug connector on terminal box with double locking latch (crimp contacts on the motor side)	71 – 225
/ADB.	MountedHan-Modular® 10B plug connector on terminal box with double locking latch (crimp contacts on the motor side)	71 – 225
/AKB.	Mounted Han-Modular® 0B plug connector on terminal box with double locking latch (crimp contacts on the motor side)	132M – 225
/AND.	Harting Han® Q8/0, single locking latch	56 – 132M
/IV	Other industrial plug connectors according to customer specifications	56 – 225

Ventilation

Fan guard design

Designation	Description	Size
–	Noise-reducing plastic fan guard	56 – 90
–	Fan guard made of sheet steel	63 – 315
/LN	Noise-reducing fan guard	100L – 132S

Type of ventilation

Designation	Description	Size
–	Fan-cooled	56 to 315
/V	Forced cooling fan	71 to 315
/U	Non-ventilated (without fan)	56 – 315
/OL	Non-ventilated (closed B-side)	63 – 280

Fan

Designation	Description	Size
–	Fan made of plastic	56 – 315
/AL	Aluminum fan	63 – 315
/Z	Additional flywheel mass (flywheel fan)	63 – 132

Brake and backstop

Brake

Designation	Description	Size
/BE..[1]	Spring-loaded brake with specification of size	56 – 315

1 Optionally available as safety brake.

Brake options

Designation	Description	Size
/HR	Manual brake release, with automatic spring-return	56 – 280
/HF	Manual brake release, lockable	63 – 315

Backstop

Designation	Description	Size
/RS	Backstop	63 – 315

Encoders

Built-in encoders

Designation	Description	Size
/EI7C[1]	Built-in incremental encoder with HTL interface, 24 periods	63 to 132S
/EI76	Built-in incremental encoder with HTL interface and 6/2/1 period(s)	71 to 132S
/EI72	Built-in incremental encoder with HTL interface and 6/2/1 period(s)	71 to 132S
/EI71	Built-in incremental encoder with HTL interface and 6/2/1 period(s)	71 to 132S
/EI8R	Built-in incremental encoder with TTL interface and 1024 periods (4096 increments)	71 – 132S
/EI8C	Built-in incremental encoder with HTL interface and 1024 periods (4096 increments)	71 – 132S
/EI8Z	Built-in incremental encoder with MOVILINK® DDI interface (12 bit incremental)	71 to 132S

1 Optionally available as safety encoder for sizes 71MS – 132S.

Add-on encoders

Designation	Description	Size
/EK8S[1]	Add-on encoder with sin/cos interface	71 to 315
/EV8S	Add-on encoder with sin/cos interface	71 to 280
/EK8R	Add-on encoder with TTL (RS422) interface	71 to 315
/EV8R	Add-on encoder with TTL (RS422) interface	71 to 280
/EK8C	Add-on encoder with HTL interface	71 to 315
/EV8C	Add-on encoder with HTL interface	71 to 280
/EK8Z	Add-on incremental and single-turn encoder with MOVILINK® DDI interface (18 bit incremental)	71 to 180
/AK8W[1]	Add-on absolute encoder with sin/cos and RS485 interface (multi-turn)	71 to 315
/AV8W	Add-on absolute encoder with sin/cos and RS485 interface (multi-turn)	71 to 280
/AK8Y[1]	Add-on absolute encoder with sin/cos and SSI interface (multi-turn)	71 to 315
/AV8Y	Add-on absolute encoder with sin/cos and SSI interface (multi-turn)	71 to 280
/AK8H	Add-on absolute encoder with sin/cos and RS485 interface and HIPERFACE® protocol	71 to 315
/AV8H	Add-on absolute encoder with sin/cos and RS485 interface and HIPERFACE® protocol	71 to 280

Designation	Description	Size
/AK8Z	Add-on absolute encoder with MOVILINK® DDI interface (18 bit incremental, 16 bit multi-turn)	71 to 180

1 Optionally available as safety encoder.

Encoder mounting adapters

Designation	Description	Size
/EK8A	Mounting adapter for encoders from the SEW-EURODRIVE portfolio	71 – 315
/EI7A	Mounting adapter for EI7 built-in encoder.	71 - 132S
/EI8A	Mounting adapter for EI8 built-in encoder.	71 - 132S
/XV8A	Mounting adapter for encoders from the SEW-EURODRIVE portfolio in fan guard with encoder mount design	71 – 280M
/XV.A	Mounting adapter for third-party encoders	80MS – 280M
/XH1.	Mounted third-party encoders	80MS – 132S
/XV..	Mounted third-party encoders	80MS – 280M

Digital motor integration

Interfaces

Designation	Description	Size
/DI	MOVILINK® DDI	71 – 180

Mounted plug connectors

Designation	Description	Size
/KD1	M23 hybrid plug connector (cable cross section 1.5 mm^2 – 4 mm^2)	71 – 160
/KD	Hybrid cable gland M25/M32 (cable cross section 1.5 mm^2 – 10 mm^2)	71 – 132S[1]
/KDB	M40 hybrid plug connector (cable cross section 6 mm^2 – 10 mm^2)	90 – 180
/KDD	Power cable gland and M23 signal connector (MOVILINK® DDI)	71 – 132S[1]

1 132M – 180 in preparation.

Built-in encoder

Designation	Description	Size
/EI8Z	Built-in incremental encoder with MOVILINK® DDI interface (12 bit incremental)	71 – 132S

Add-on encoders

Designation	Description	Size
/EK8Z	Add-on incremental and single-turn encoder with MOVILINK® DDIinterface (18 bit incremental)	71 – 180
/AK8Z	Add-on absolute encoder with MOVILINK® interface (18 bit incremental, 16 bit multi-turn)	71 – 180

Brake rectifier

Designation	Description	Size
BG1Z[1]	Integrated brake control with MOVILINK® DDI interface and brake diagnostics as well as brake wear detection	71 – 180

1 Is coded using the DDI type code and is therefore not listed in the type designation of the motor.

Functional safety

Brake

Designation	Description	Size
/BE..	Spring-loaded brake with specification of size	63 – 315

Brake options

Designation	Description	Size
/HR	Manual brake release, with automatic spring-return	63 – 280

Built-in encoders

Designation	Description	Size
/EI7C	Built-in incremental encoder with HTL interface, 24 periods	71 – 132S

Add-on encoders

Designation	Description	Size
/AK8W	Add-on absolute encoder with sin/cos and RS485 interface (multi-turn)	71 – 315
/AK8Y	Add-on absolute encoder with sin/cos and SSI interface (multi-turn)	71 – 315
/EK8S	Add-on encoder with sin/cos interface	71 – 315

Decentralized technology

Designation	Description	Size
/MSW	MOVI-SWITCH®	56 – 100
/D..	MOVIMOT® advanced	71M – 132M

Environmental influences

IP degree of protection

Designation	Description	Size
–	IP54	56 – 315
–	IP55	56 to 315
–	IP56	56 to 315
–	IP65	56 to 315
–	IP66	56 to 315

Winding protection

Designation	Description	Size
–	Encapsulated stator winding	63 – 132S
–	Moisture and acid protection	56 – 315
–	Tropicalization	63 – 315

Surface protection

Designation	Description	Size
–	ECO2	56 – 90
–	Unpainted design	56 – 315
–	OSG base coat	56 to 315
–	OS1 to OS4 surface protection	56 to 315

Corrosion protection

Designation	Description	Size
–	KS corrosion protection	56 – 315

Miscellaneous instructions

Designation	Description	Size
–	Anti-condensation heating	63 – 315
/DH	Condensation drain hole	63 – 315
/C	Canopy for the fan guard	63 – 315

Other motor designs

Designation	Description	Size
/2W	Second shaft end at motor	63 – 315
–	Motor design according to recommendation VE01 of the VIK (Verband der Industriellen Energie- und Kraftwirtschaft e.V. – German Association of Industrial Energy Consumers)	63 – 315

2.11 Order information

When ordering a gear unit, the following information may also be required in addition to the type designation and gear unit design.

2.11.1 Information on the mounting positions

For information on mounting positions, refer to chapter "General information on mounting positions – R.., F.., K.., S.., W.. gear units" (▸ 154).

2.11.2 Position of the output shaft and the output flange

For right-angle gear units, you must also specify the position of the output shaft and the output flange:

– A or B or AB

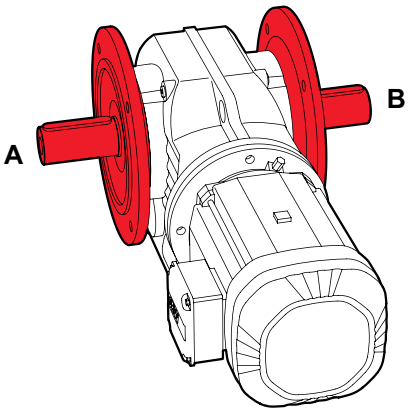

2.11.3 Output direction of rotation with backstop

The backstop is used to prevent unwanted directions of rotation. During operation, the backstop permits rotation only in the specified direction. For drives with RS backstop, you must also specify the output direction of rotation of the drive.

For right-angle gear units, you must also specify whether the direction of rotation is specified with a view to the A-side or B-side.

The direction of rotation is determined as viewed onto the output shaft (LSS):

- Clockwise rotation (CW)
- Counterclockwise rotation (CCW)

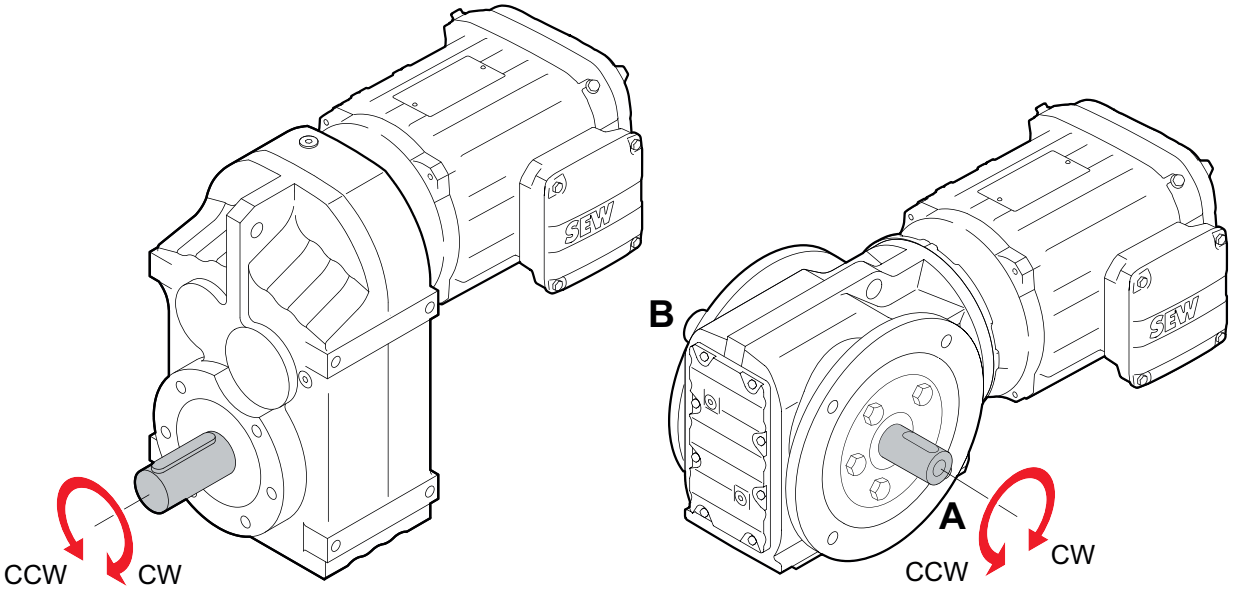

The permitted direction of rotation is indicated by a direction arrow on the housing:

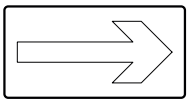

A replacement label is enclosed for the customer.

2.11.4 Position of the output end in right-angle gear units

In shaft-mounted, right-angle gear units with a shrink disk, you also have to indicate whether the A or B-side is the output end. In the figure below, the A-side is the output end. The shrink disk is located opposite the output end.

In shaft-mounted, right-angle gear units, the designation "output end" is equivalent to the designation "position of the output shaft" used for right-angle gear units with solid shaft.

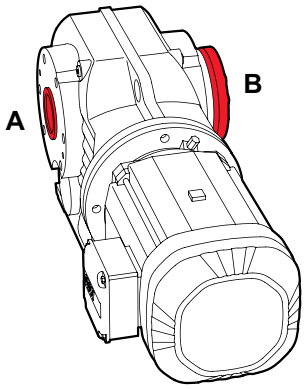

For the permitted mounting surfaces (hatched area), refer to the mounting position sheets (see chapter "Mounting position sheets" (▶ 163)).

2.11.5 Position of motor terminal box and cable entry

The position of the motor terminal box has so far been indicated with 0°, 90°, 180° or 270° as viewed onto the fan guard (B-side), see the following figure. A change to DIN EN 60034-1 stipulates that the following designation has to be used for the terminal box position of foot-mounted motors in the future:

- View of the output shaft = A-side
- Designation as R (right), B (bottom), L (left), and T (top)

This new designation applies to foot-mounted motors without a gear unit in mounting position B3 (= M1). For gearmotors, the previous designation is retained and is still specified with 0°, 90°, 180°, and 270° when looking at the fan guard = B-side.

The following figure shows both designations. If the mounting position of the motor changes, R, B, L, and T are rotated accordingly. For motor mounting position B8 (= M3), T is at the bottom.

The position of the cable bushing can also be selected. "X" (= normal position), "1", "2" or "3" are possible, as shown in the following figure.

Without special information on the terminal box, the 0° version is supplied with cable bushing "X". For mounting position M3, SEW-EURODRIVE recommends selecting cable bushing "2".

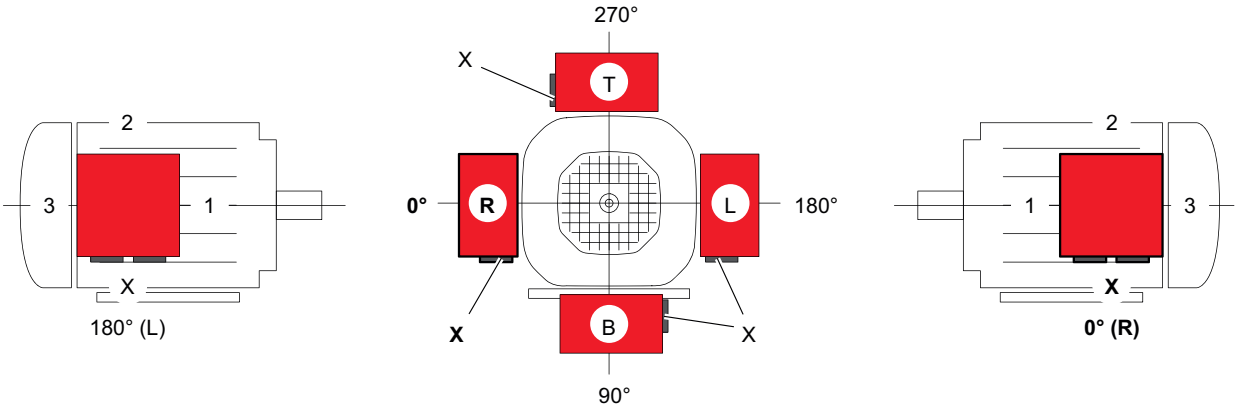

For motor sizes 56 and 63, only cable entries "X" and "2" are possible. Exception: This restriction does not apply with IS connector.

With **terminal box position 90° (B)**, check whether the gearmotor must be supported.

The position of the terminal box is not given on the nameplate.

Limitations

The cable entry positions X, 1, 2, 3, and terminal box positions (0°= R, 90° = B, 180° = L, 270°= T) cannot be chosen freely for all cases. Some additional motor features require a connection in the terminal box. This connection requires a larger terminal box than the standard design – in accordance with the clearance and creepage distances required in the standards.

The dimension sheets show only the standard terminal box. Dimensions not listed in the dimension sheets are available via Online Support on the SEW-EURODRIVE website in the respective CAD data.

2.11.6 Position motor terminal box and foot for gearmotors with motor option /FM

With gearmotors, the motor is designed as flange-mounted motor for mounting to gear units. It is also possible to provide the motor with feet that can be used for customer components. The load values of the feet are available from SEW-EURODRIVE on request. The position of the foot must be specified in the order.

The following figure shows the possible positions of the terminal box and the feet for gearmotors with motor option FM.

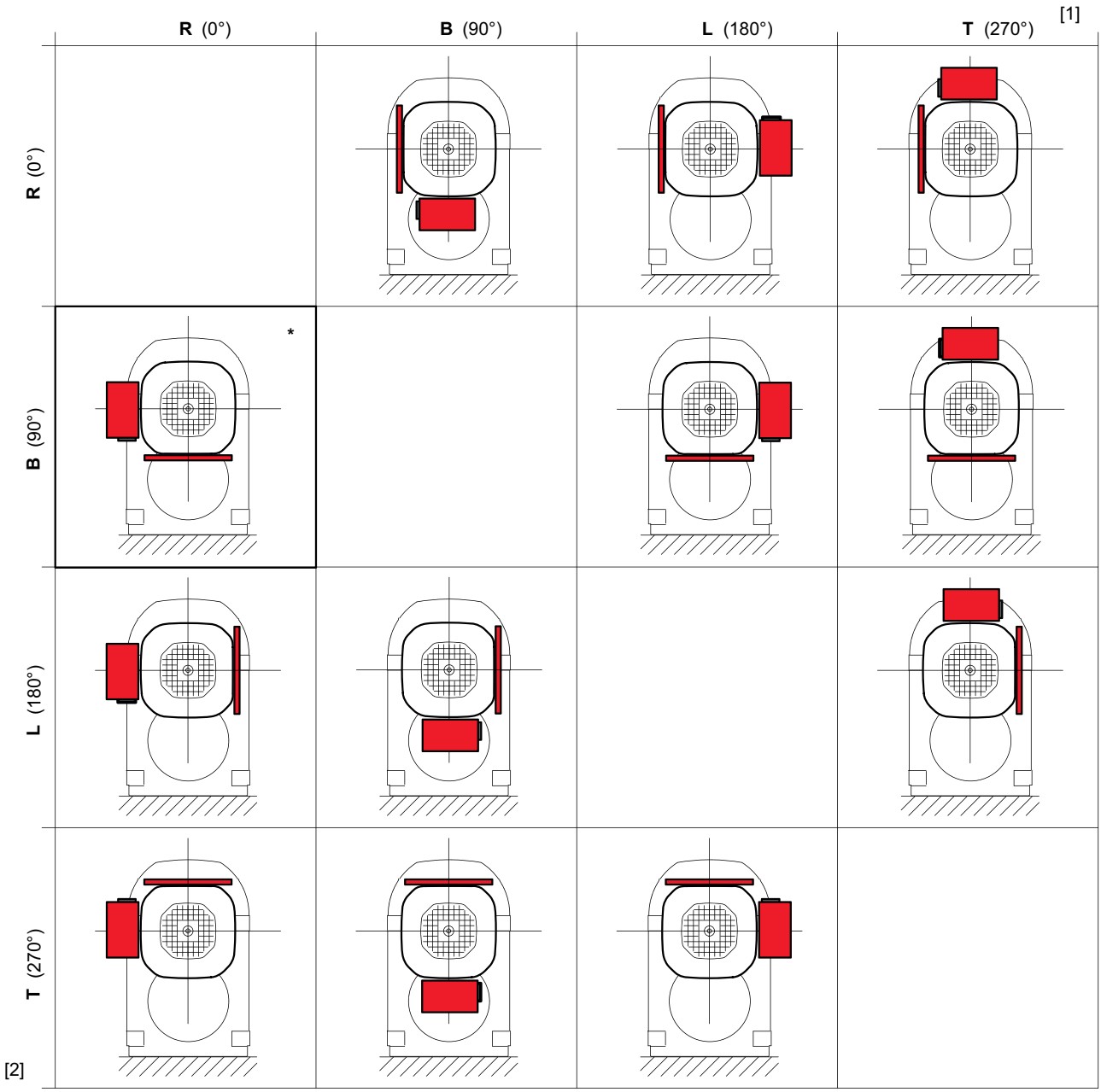

[1] Terminal box positions
[2] Foot positions
*) If not specified otherwise in the order, the gearmotor is delivered with foot position B (90°) and terminal box position R (0°).

For motors in size 63 the foot is always positioned at 90° and the terminal box at 270°.

The foot on the motor is not suited to attach a complete gearmotor.

Example: Gearmotor with motor option /FM:

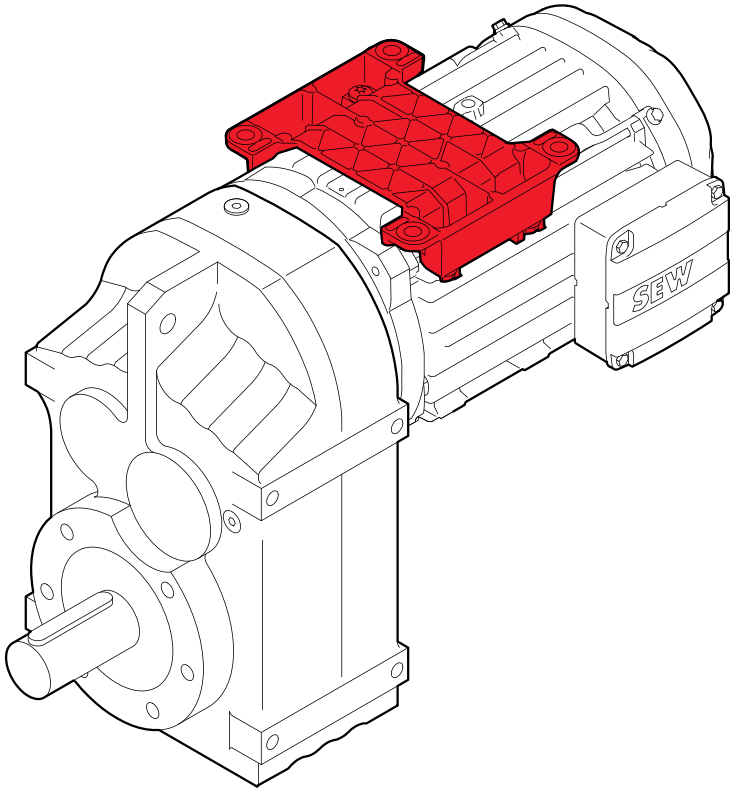

Order information on mounting position of the complete drive, foot positions, terminal box and cable bushing:

Mounting position entire drive:	M1
Terminal box position:	R (0°)
Cable bushing:	X
Foot position:	T (270°)

2.11.7 Sample orders

Type (examples)	Mounting position	Shaft position	Flange position	Position of terminal box	Cable bushing position	Output direction of rotation
K47 DRN71M4/RS	M2	A	–	0°	"X"	Right
SF77 DR2S90L4	M6	AB	AB	90°	"3"	–
KA97/II2GD EDRN132M4/2GD	M4	B	–	270°	"2"	–
KH107 DRN160M4	M1	A	–	180°	"3"	–
KAF67AMS90	M3	A	B	–	–	–
R67 DR2S80M4	M1	–	–	90°	"X"	–
KA29/II2GD EDRN90L4/3G	M4	B	–	270°	"2"	–

3 Mounting positions of gearmotors

3.1 General mounting position information for R.., F.., K.., S.., W.. gear units

The following illustration shows the mounting positions M1 – M6 of SEW-EURODRIVE:

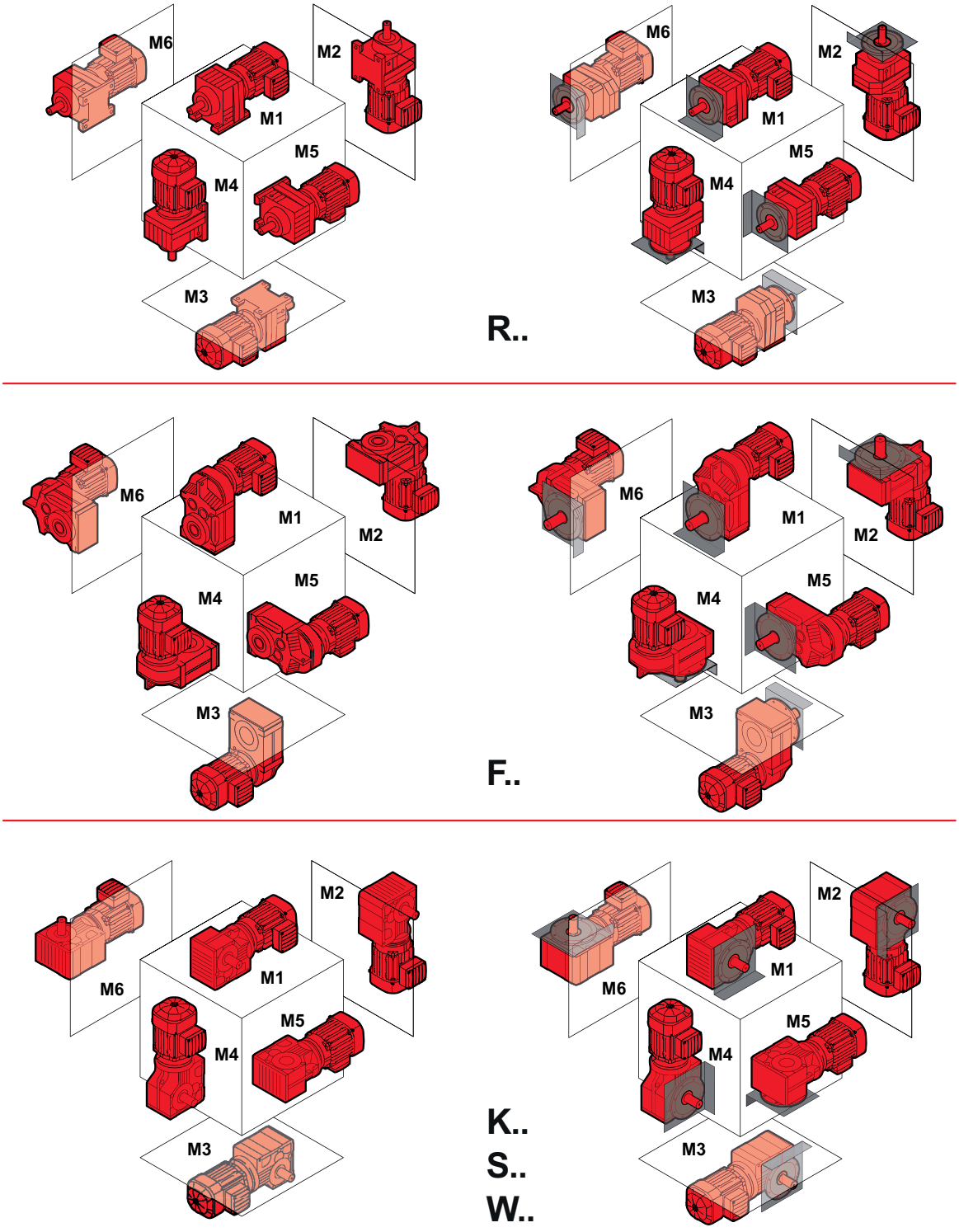

3.1.1 Change of mounting position

Observe the following information when operating the gearmotor in a mounting position other than the one indicated in the order:

- Adjust the lubricant fill quantity to the changed mounting position.
- Adjust the position of the breather valve.
- When changing the mounting position to M4: Contact SEW-EURODRIVE. Depending on the drive's operating mode, an oil expansion tank may be necessary (see chapter "Oil expansion tank" (▶ 54)).
- For helical-bevel gearmotors: Contact SEW-EURODRIVE if you want to change to mounting position M5 or M6.
- For helical-worm gearmotors: Contact SEW-EURODRIVE when changing to mounting position M2 or M3.
- For helical gearmotors: Contact SEW-EURODRIVE when changing to mounting position M2.
- If the mounting position is changed to another mounting position with a larger oil fill volume, SEW-EURODRIVE recommends performing a new thermal check/project planning.

3.1.2 Gear units in pivoted mounting position (dynamic)

The dynamic pivoted mounting position is available on request for gear units of the types R..7, F..7, K..7, K..9, S..7, and SPIROPLAN® W..9.

In the pivoted mounting position, the gear units are delivered with the maximum required oil fill quantity and sealed with oil screw plugs. The gear unit can be pivoted during operation to the mounting positions required by the customer.

3.1.3 Gear unit in pivoted mounting position (stationary)

The stationary pivoted mounting position is available for all gear units of the type R..7, F..7, K..7, K..9, S..7 and SPIROPLAN® W..9.

In the stationary pivoted mounting position, the gear units are delivered with the oil fill quantity required for this pivoted mounting position and sealed with oil screw plugs. For gear units with stationary pivoted mounting position, replace the highest screw plug with the supplied breather valve before startup.

3.1.4 Universal mounting position M0

SPIROPLAN® right-angle gear units W..10 – W..30 are available in universal mounting position M0. Due to their small size they are completely enclosed and do not have a breather valve. You can use them in any mounting position from M1 to M6 without needing to make any adjustments to the gear unit.

All W..10 to W..30 gear units of a particular size have the same oil fill quantity.

3.1.5 Mounting position MX

Mounting position MX is available for all gear units of sizes R..7, F..7, K..7, K..9, S..7 and SPIROPLAN® W..9.

Before startup, make adjustments dependent on the mounting position for gear units in mounting position MX.

In the mounting position MX, the gear units are delivered with the maximum required oil fill quantity and sealed with oil screw plugs. A breather valve is included with each drive. You must adjust the oil fill quantity of the gear unit according to the mounting position in which the gear unit is operated (see chapter "Lubricant fill quantities" (▶ 54)). You must also mount the enclosed breather valve to the position depending on the mounting position, see chapter "Mounting position sheets" (▶ 163).

Compound gear units in MX mounting position

In MX mounting position, both gear units (primary and subsequent gear unit) are in the same mounting position.

3.1.6 Variable mounting position

The variable mounting position is available on request for gear units of the types R..7, F..7, K..7, K..9, S..7 and SPIROPLAN® W..9.

With the variable mounting position, the gear units are delivered with the maximum required oil fill quantity for the given mounting positions and sealed with screw plugs. A breather valve is included if necessary.

It is not necessary to adjust the oil fill quantity.

The enclosed breather valve must be mounted in the proper location depending on the mounting position, see chapter "Mounting position sheets" (▶ 163).

3.2 Mounting position designation of motors

3.2.1 Mounting positions of AC motors according to IEC 60034-7

Motor design FI

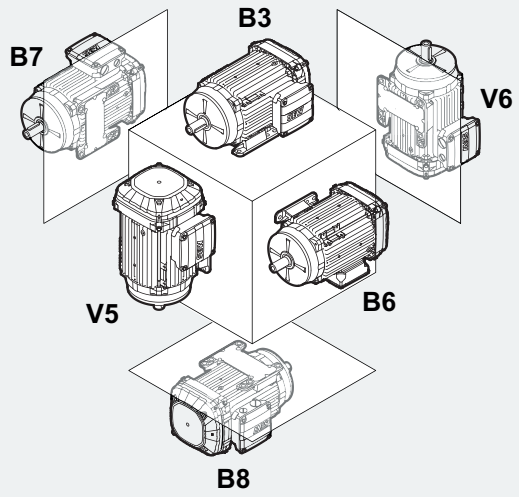

Motor design FE and FK

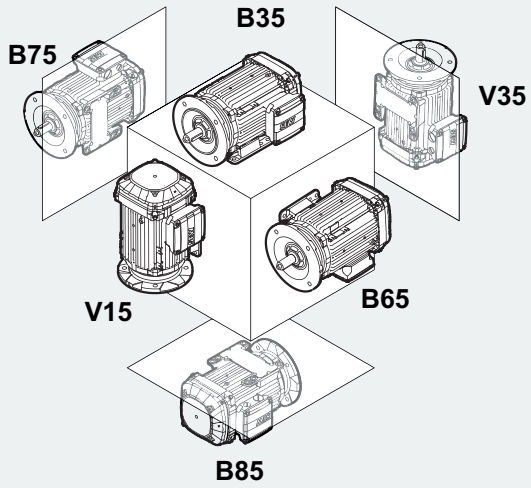

Motor design FF and FL

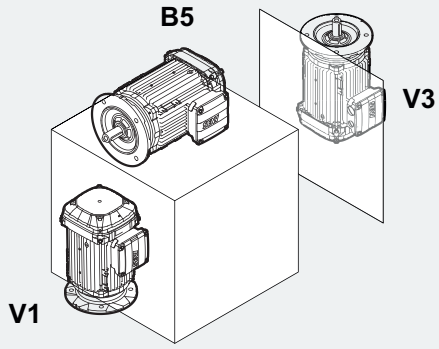

Motor design FY

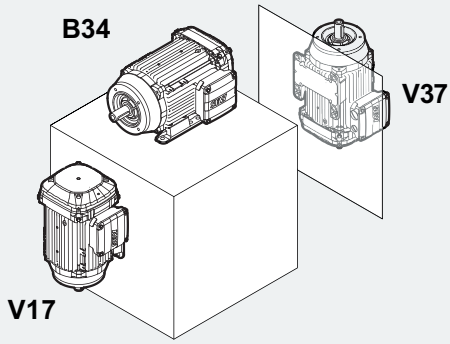

Motor design FT and FC

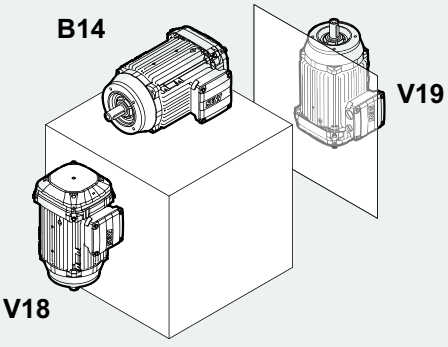

3.2.2 Position of motor terminal box and cable entry

The standard IEC 60034-1 specifies the following designations for the motor terminal box positions:

– As viewed onto the output shaft = A-side.

– Designation as R (right), B (bottom), L (left) and T (top).

Deviating from this standard, in case of gearmotors the position of the motor terminal box is specified with 0°, 90°, 180°, or 270° as viewed onto the fan guard = B-side.

The following figure shows both designations. Where the mounting position of the motor changes, R, B, L, and T are rotated accordingly.

The cable entry position is specified with X, 1, 2, 3.

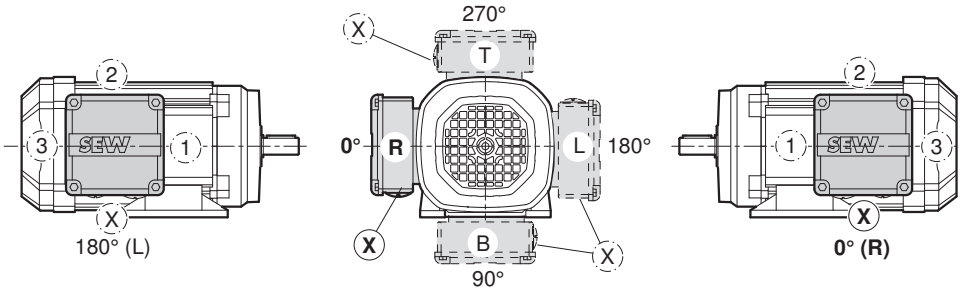

Without specific information regarding the terminal box, the design 0° with cable entry "X" (designation "normal" in quotation and order confirmation) is delivered.

For motors up to size 63, the terminal box is cast onto the stator. The cable entry is therefore fixed at position "X" and "2".

The position of the terminal box is not given on the nameplate.

3.3 Position of breather valve/oil drain plug in motor flange

As shown in the mounting position sheets, the position of the breather valve/oil drain plug depend on the gearmotor mounting position.

The following table lists the position of the breather valve and the oil drain plug depending on the mounting position.

Mounting position	Breather valve position	Oil drain plug position
M1, M3, M5, M6	In the gear unit housing	In the gear unit housing
M4	**In the motor flange**	In the gear unit housing
M2	In the gear unit housing	**In the motor flange**

If the breather valve (M4 mounting position) or the oil drain plug (M2 mounting position) is positioned in the motor flange, the position depends on the terminal box position.

The positions of the breather valve/oil drain plug in the mounting position sheets always refers to the standard terminal box position 0°. Note that the position of the breather valve/oil drain plug is changed depending on the possible terminal box positions (90°, 180°, 270°).

The following figure shows the exact position of the breather valve or oil drain plug in the motor flange.

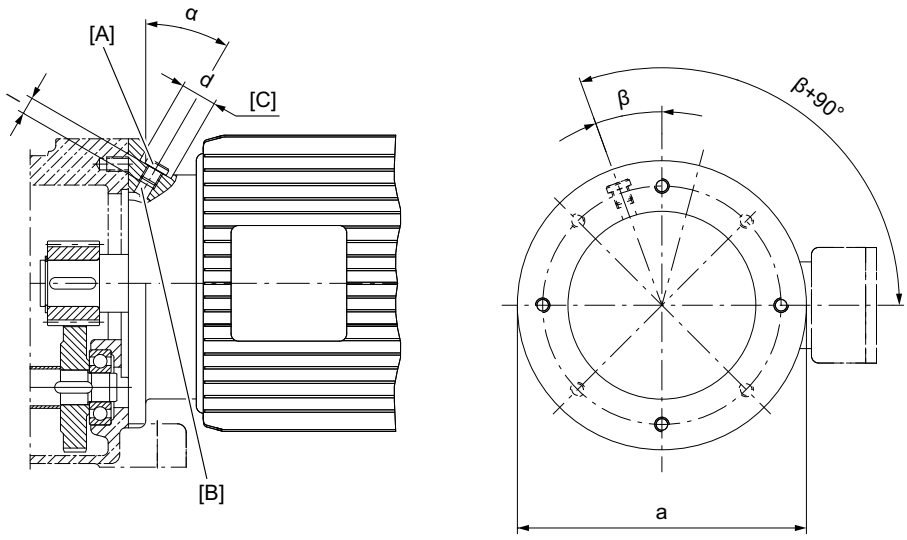

[A] Position of breather valve/oil drain plug
[B] Continuous core drilling
[C] Counterbored bore
[α] Drill angle
[d] Diameter of countersinking
[l] Thread length
[a] Flange diameter
[β] Position angle

3.3.1 Dimension tables

The following tables contain the dimensions regarding the position of the breather valve and the oil drain plug depending on the motor size.

Motor	a in mm	α in °	β in °	Thread designation	Ø d in mm	l in mm
DR2S56	105[1]	0	45	M10 × 1	–	10
DRN63 **DRN71**	105[1]	0°	45°	M10 × 1	–	10
	120	30°	22.5°		15	
	120[1]	0°	45°		–	
	160	30°	22.5°		15	
	160[1]	0°	45°			
	200	30°	22.5°	M12 × 1.5	18	12
	250					
	300	90°		M22 × 1.5	28	14
DRN80	105	0°	45°	M10 × 1	–	10
	120	30°	22.5°		15	
	120[1]	0°	45°		–	
	160	30°	22.5°		15	
	160[1]					
	200			M12 × 1.5	18	12
	250					
	300	90°		M22 × 1.5	28	14
DRN90	120	30°	22.5°	M10 × 1	15	12
	120[1]	0°	45°			
	160	30°	22.5°			
	160[1]	0°	45°			
	160	30°	22.5°			
	200			M12 × 1.5	15	16
	250				18	12
	300			M22 × 1.5	28	
DRN100	120	30°	22.5°	M10 × 1	15	10
	160					12
	200			M12 × 1.5	18	
	250					
	300			M22 × 1.5	28	14
	350					
DRN112M **DRN132S**	160	30°	22.5°	M10 × 1	15	10
	200			M12 × 1.5	18	12

Motor	a in mm	α in °	β in °	Thread designation	Ø d in mm	l in mm
	250					
	300			M22 × 1.5	28	14
	350					
	400	45°				10
	450			M33 × 2	40	16
DRN132M/L	160	30°	22.5°	M10 × 1	15	10
	200	15°		M12 × 1.5	18	14
	250	30°				
	300			M22 × 1.5	28	12
	350					14
	400					13
	450	75°		M33 × 2	40	16
	550	90°		M42 × 2	50	18
DRN160	200	30°	22.5°	M10 × 1	15	17
	250			M12 × 1.5	18	15
	300			M22 × 1.5	28	12
	350					
	400					16
	450			M33 × 2	40	
	550	90°		M42 × 2	50	
DRN180	250	30°	22.5°	M12 × 1.5	18	15
	300			M22 × 1.5	28	
	350					
	400					16
	450			M33 × 2	40	
	550	90°		M42 × 2	50	17
DRN200	250	30°	22.5°	M12 × 1.5	18	15
	300			M22 × 1.5	28	
	350					14
	400					16
	450			M33 × 2	40	
	550			M42 × 2	50	19
DRN225	300	30°	22.5°	M22 × 1.5	28	15
	350					14
	400					16
	450			M33 × 2	40	17
	550			M42 × 2	50	29

Motor	a in mm	α in °	β in °	Thread designation	Ø d in mm	l in mm
DRN250 **DRN280**	350	15°	22.5°	M22 × 1.5	28	14
	400		21°			
	450		22.5°	M33 × 2	40	16
	550			M42 × 2	50	
DRN315	450	30°	22.5°	M33 × 2	40	30
	550		11.25°	M42 × 2	50	20

1 The motor flange is made of die-cast aluminum. Motor flanges that are not marked are made of gray cast iron.

3.4 Mounting position sheets

3.4.1 Dimension sheet information

Position of the valves and screws

The positions of the breather valve, oil level plug, and oil drain plug specified in the mounting position sheets are binding and comply with the assembly specifications. The motors are only depicted symbolically on the mounting position sheets.

Representation of the shaft

For gear units with solid shaft, the shaft shown is always on the A-side. For shaft-mounted gear units, the customer shaft is shown as a dashed line. The output end (position of the output shaft) is always shown on the A-side.

W..0 gear units

SPIROPLAN® right-angle gearmotors W..10, W..20, and W..30 are independent of the mounting position. No breather valves, oil level plugs or oil drain plugs can be installed. Mounting positions M1 to M6 are also displayed for these SPIROPLAN® right-angle gearmotors for better orientation.

Mounting position M0

Some gear units can be supplied in mounting position M0. In this case, the gear unit is delivered in a universal mounting position and can be used in various mounting positions without adjustments.

Gear units W..9 in mounting position M4 or M2

SPIROPLAN® right-angle gearmotors W..9 are equipped with breather valves in mounting position M4 and with an oil drain plug in mounting position M2.

Symbols used

The following table shows the symbols used in the mounting position sheets.

Symbol	Meaning
	Breather valve
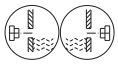	Oil level plug
	Oil drain plug

3.4.2 Mounting positions of helical gear units

RX57 – RX107

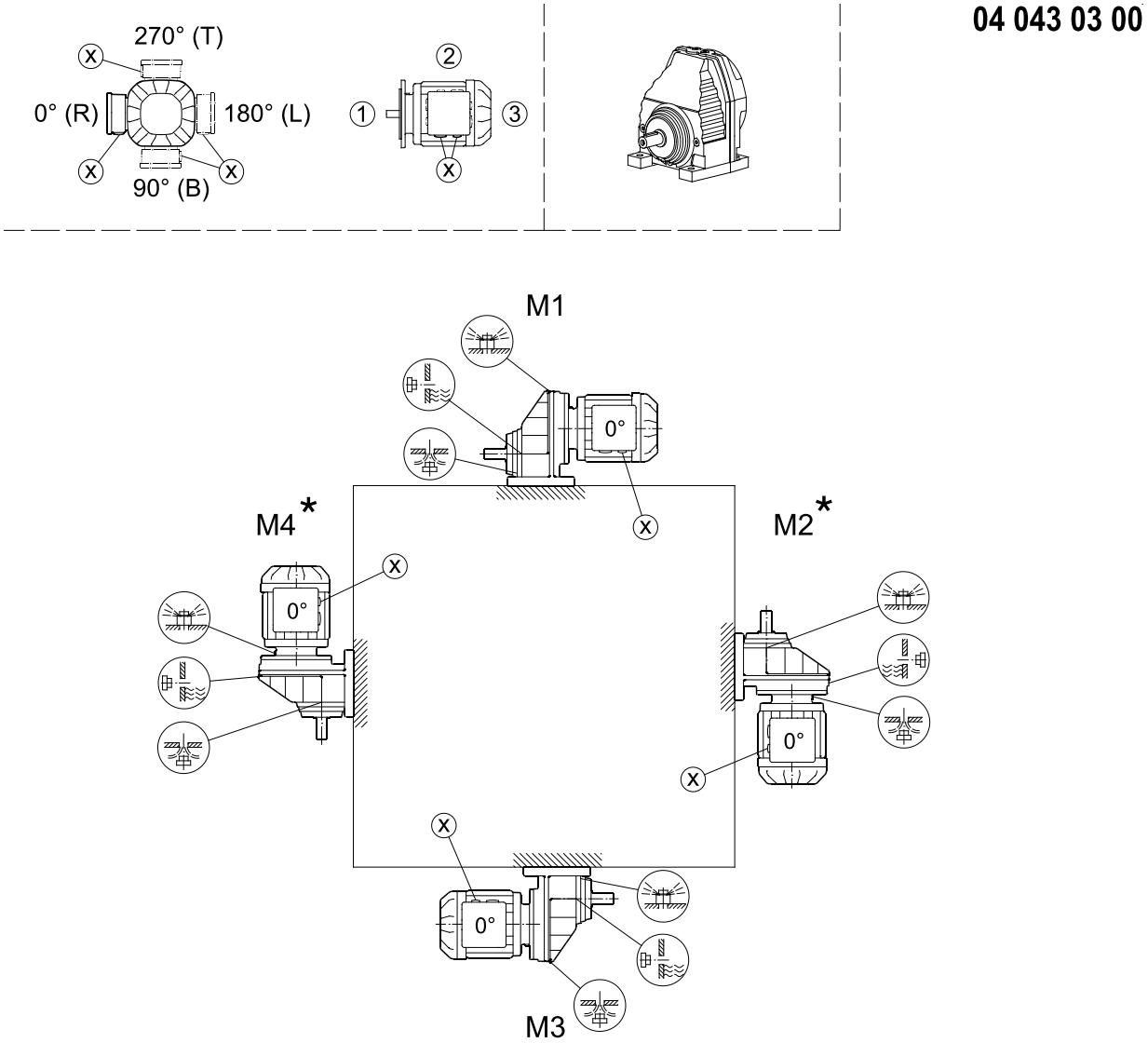

* (▶ 1051)

RXF57 – RXF107

04 044 03 00

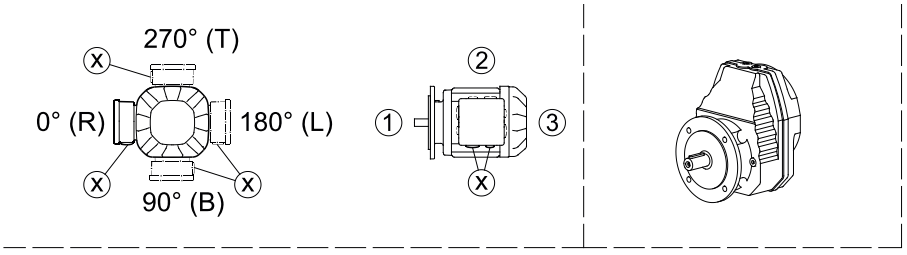

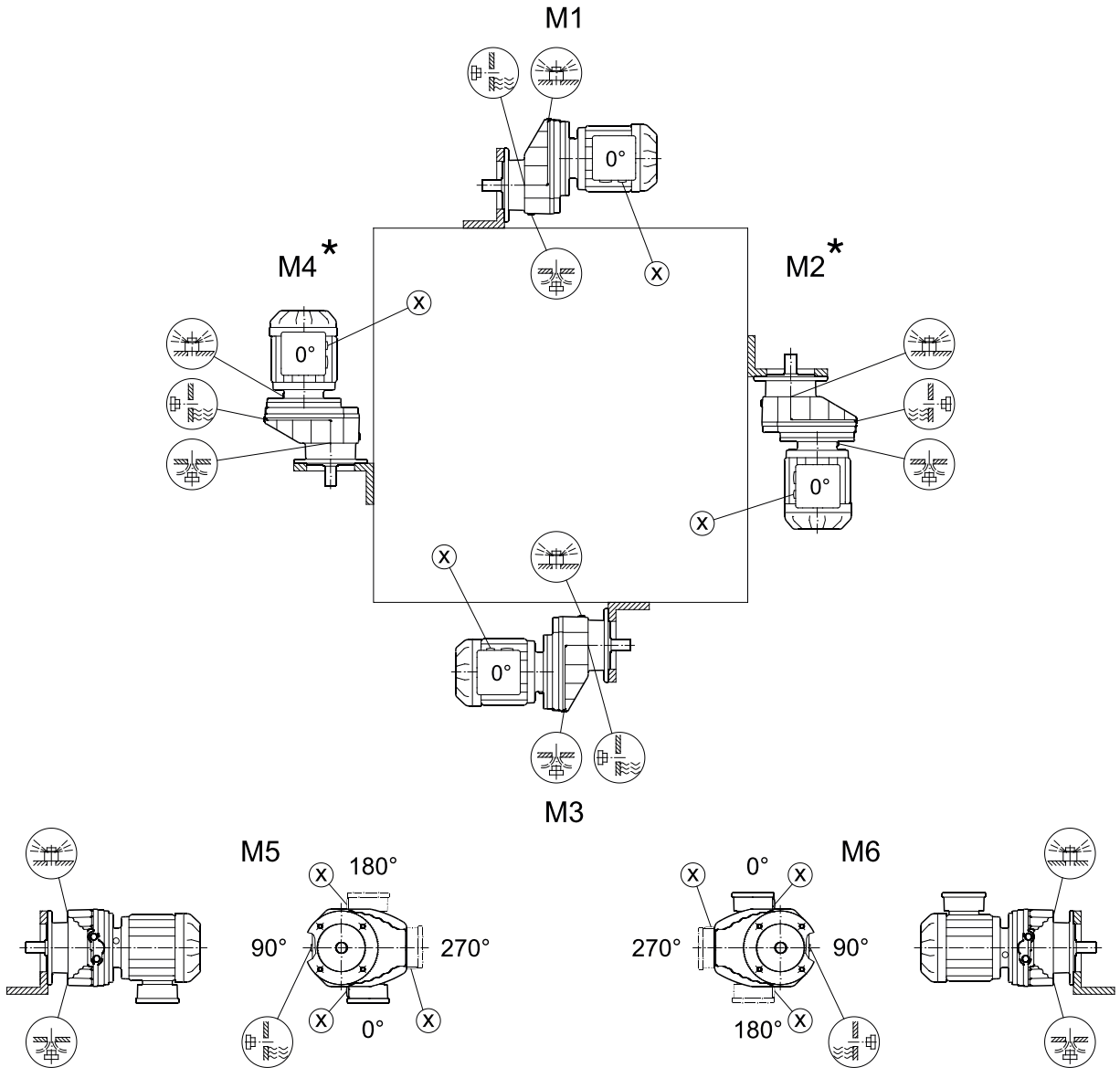

* (▶ 1051)

R07 – R167

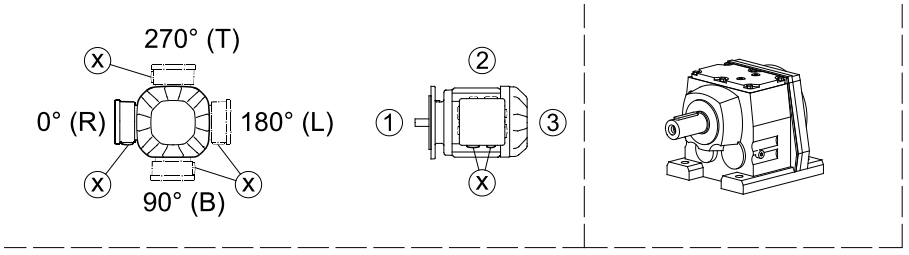

04 040 04 00

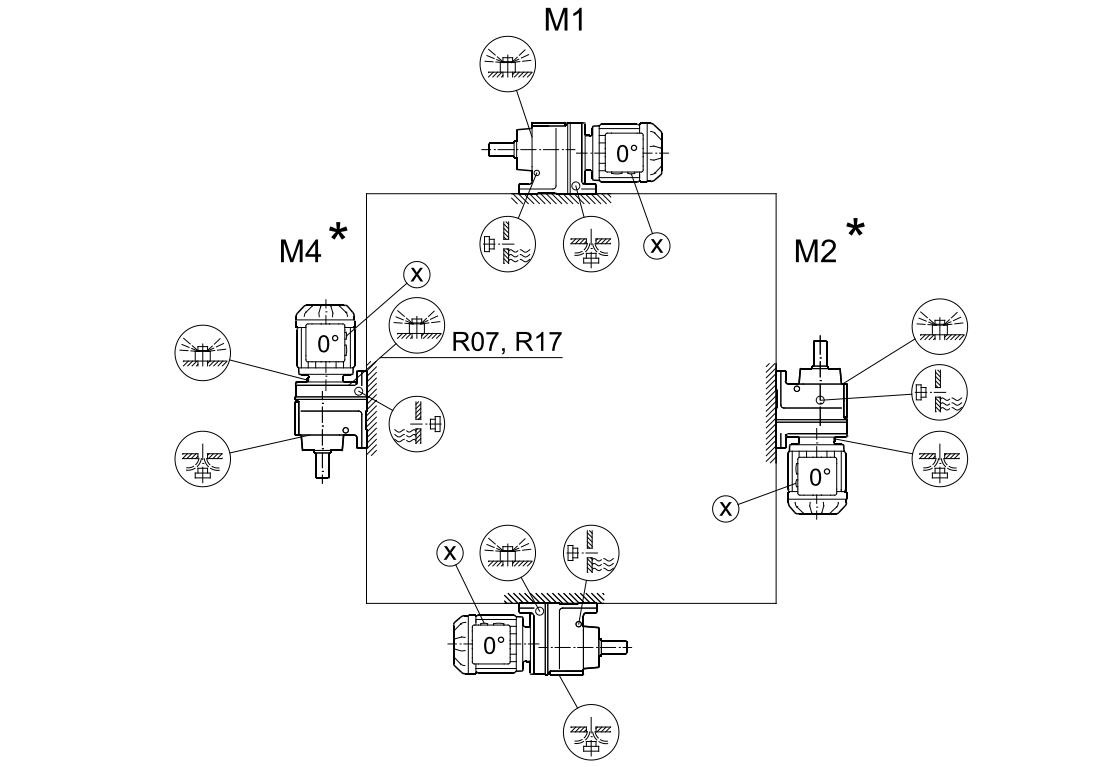

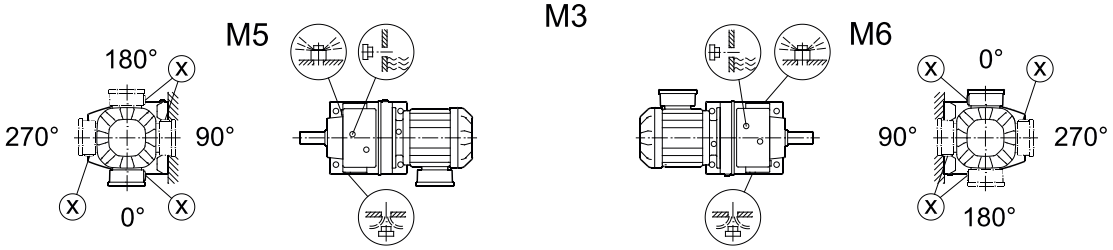

R07	⊗	M1, M2, M3, M5, M6
R17, R27	⊗	M1, M3, M5, M6
R07, R17, R27	⊗ ⊗	
R47, R57	⊗	M5

* (▸ 1051)

Observe the information in chapter "Overhung and axial loads of R.., F.., K.., S.., W.. gear units" (▸ 1058).

RF07 – RF167, RZ07 – RZ87, RM57 – RM167

04 041 04 00

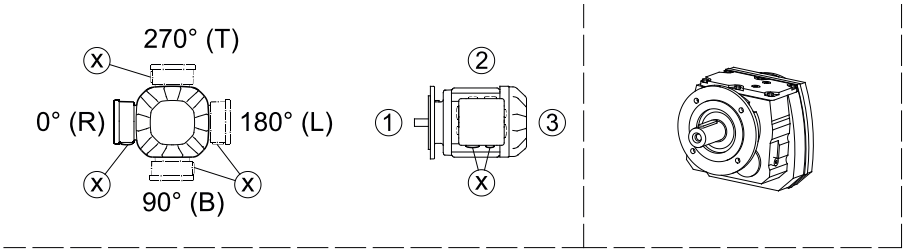

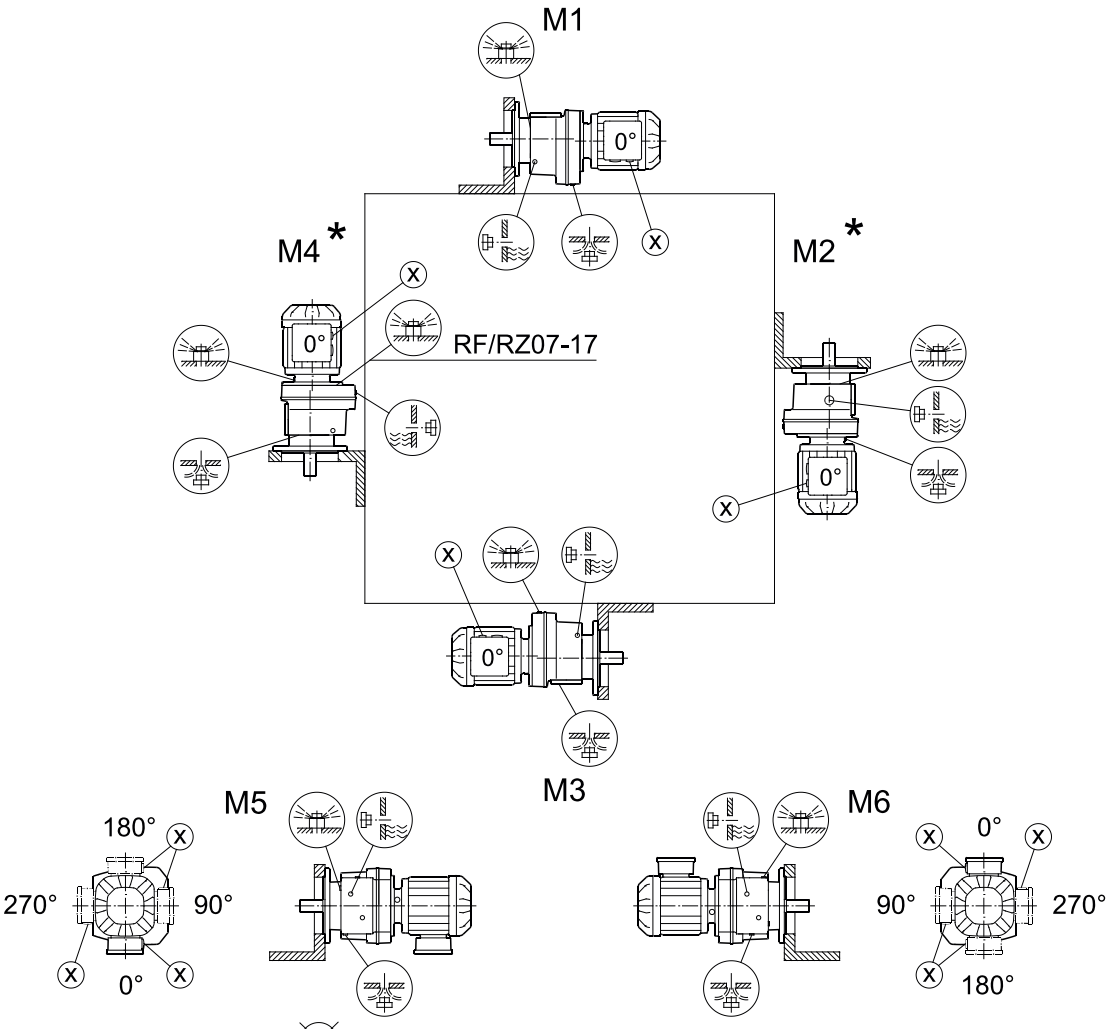

RF/RZ07		M1, M2, M3, M5, M6
RF/RZ17, 27		M1, M3, M5, M6
RF/RZ07, 17, 27		
RF/RZ47, 57		M5

* (▶ 1051)

R07F – R87F

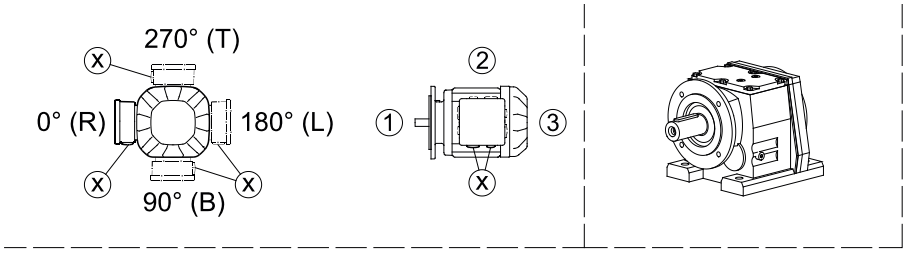

04 042 04 00

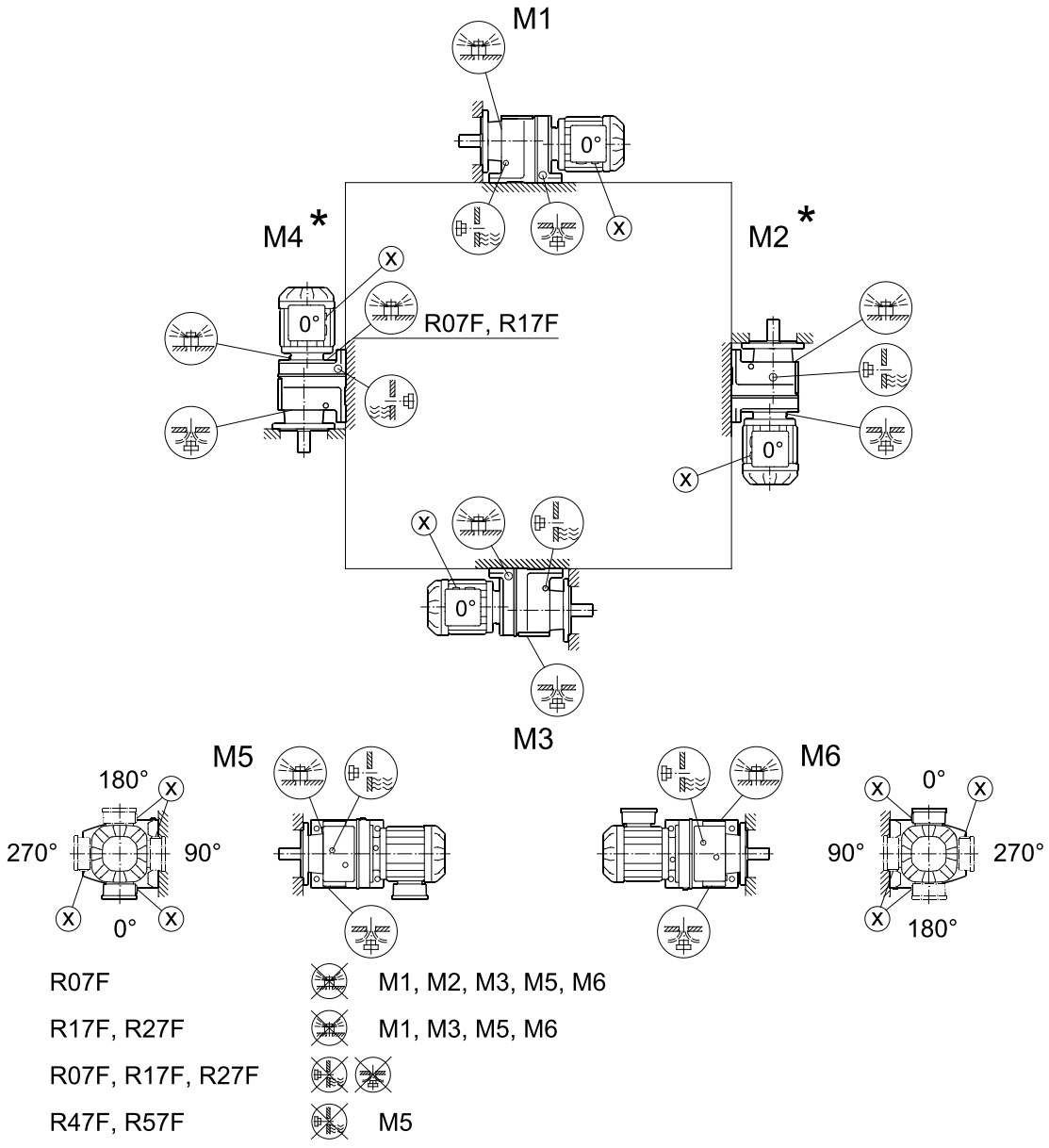

R07F	M1, M2, M3, M5, M6
R17F, R27F	M1, M3, M5, M6
R07F, R17F, R27F	
R47F, R57F	M5

* (▶ 1051)

Observe the information in chapter "Overhung and axial loads of R.., F.., K.., S.., W.. gear units" (▶ 1058).

3.4.3 Mounting positions of parallel-shaft helical gear units

F/FA..B/FH27B – 157B, FV27B – 107B

42 042 04 00

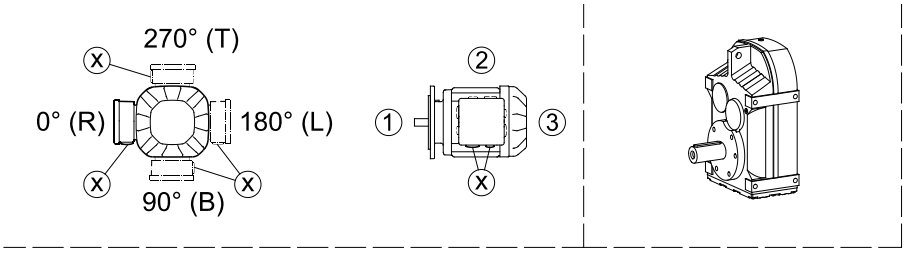

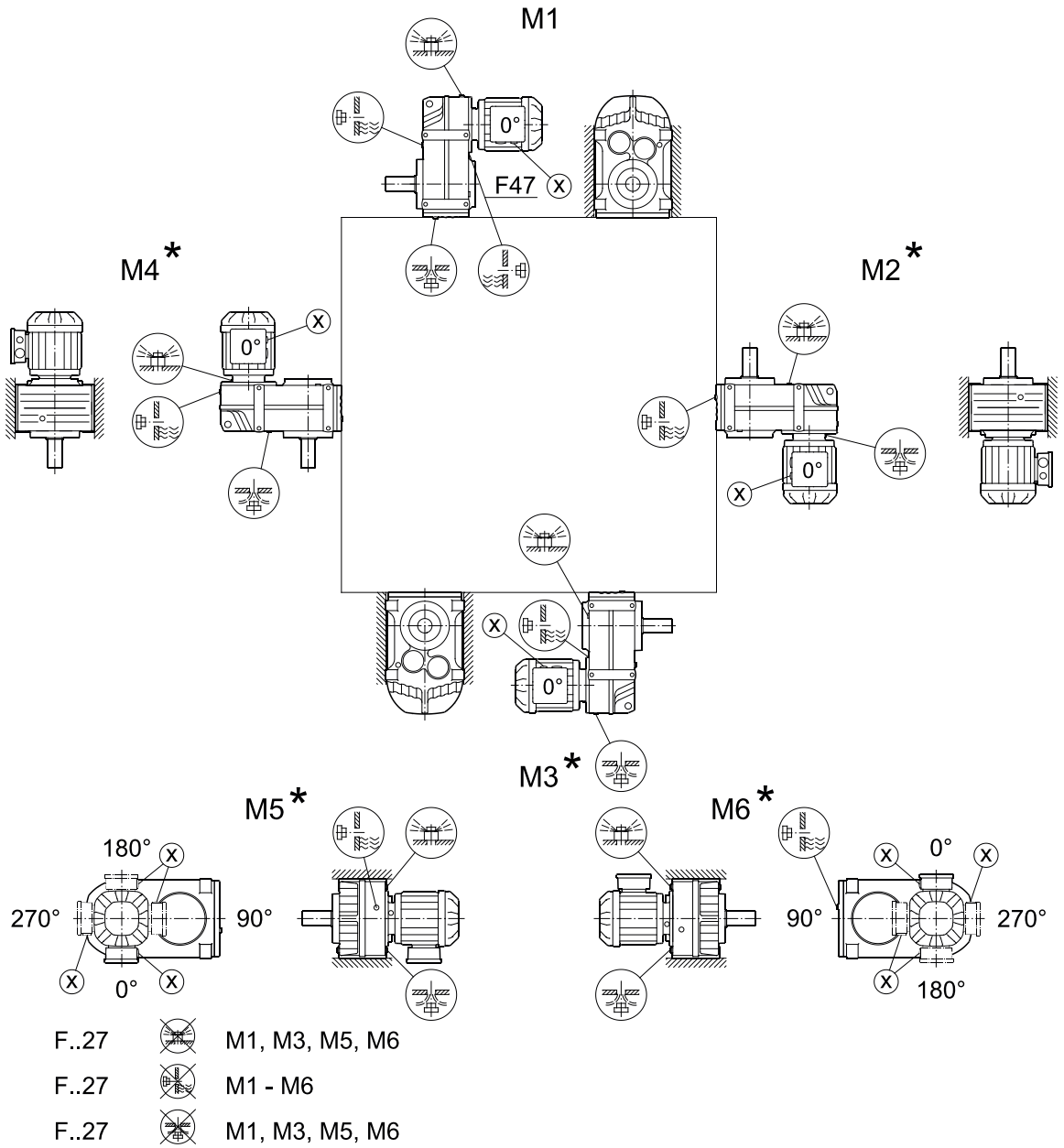

F..27 M1, M3, M5, M6

F..27 M1 - M6

F..27 M1, M3, M5, M6

* (▶ 1051)

FF/FAF/FHF/FZ/FAZ/FHZ27 – 157, FVF/FVZ27 – 107, FM/FAM67 – 157

42 043 04 00

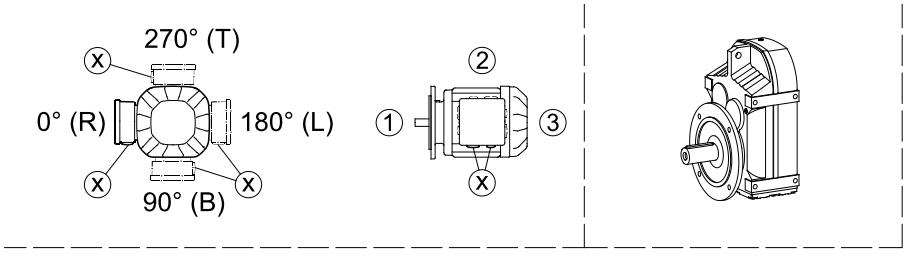

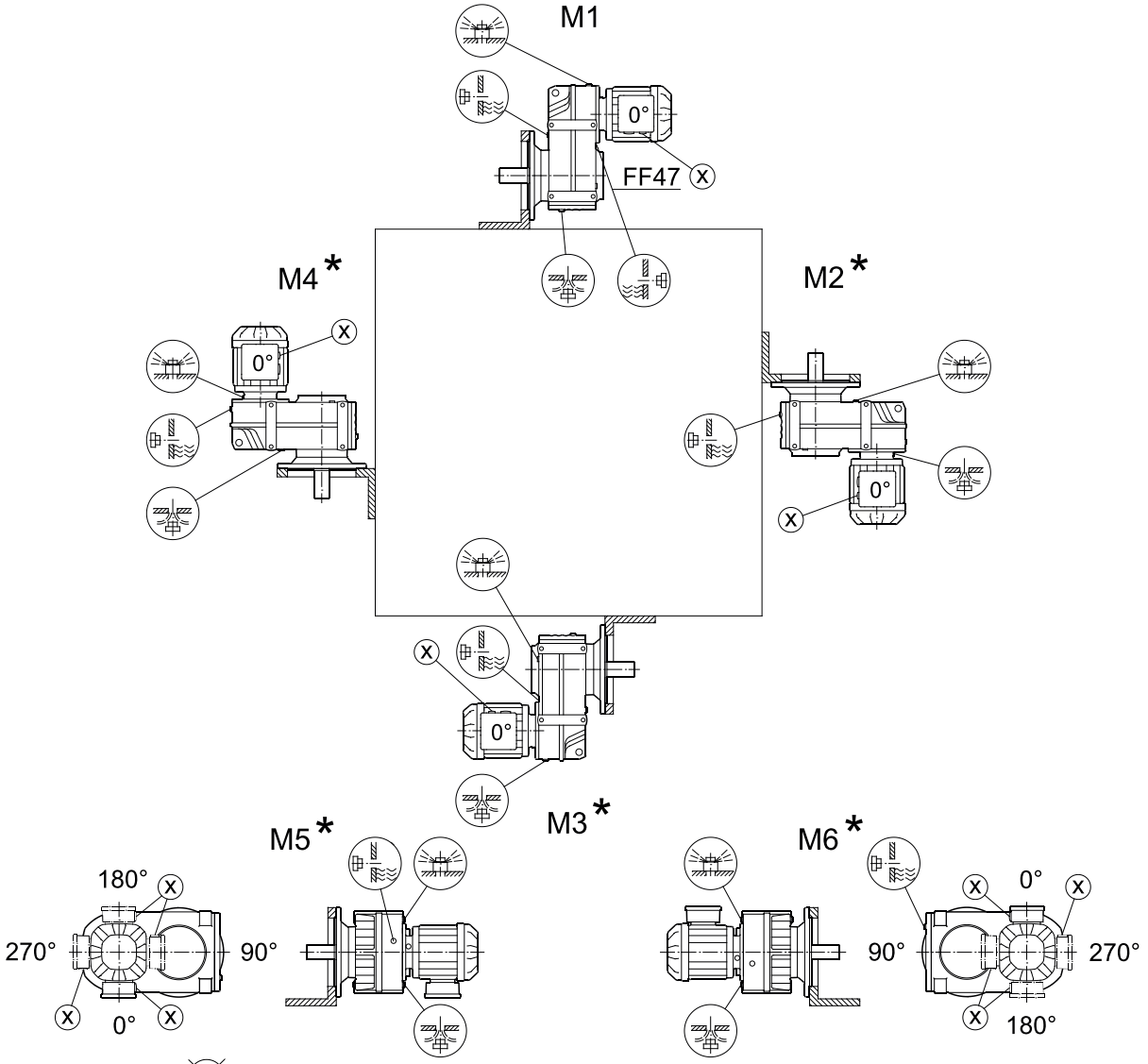

F..27		M1, M3, M5, M6
F..27		M1 - M6
F..27		M1, M3, M5, M6

* (▶ 1051)

FA/FH27 – 157, FV27 – 107, FT37 – 157

42 044 04 00

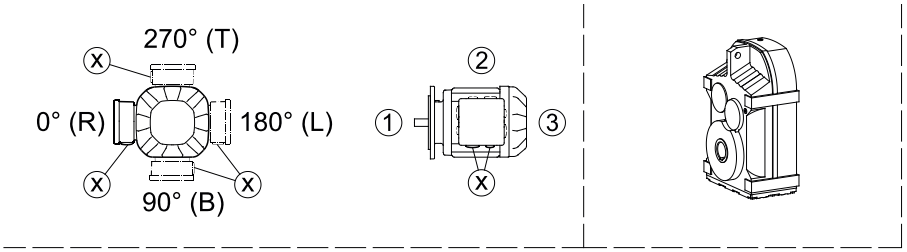

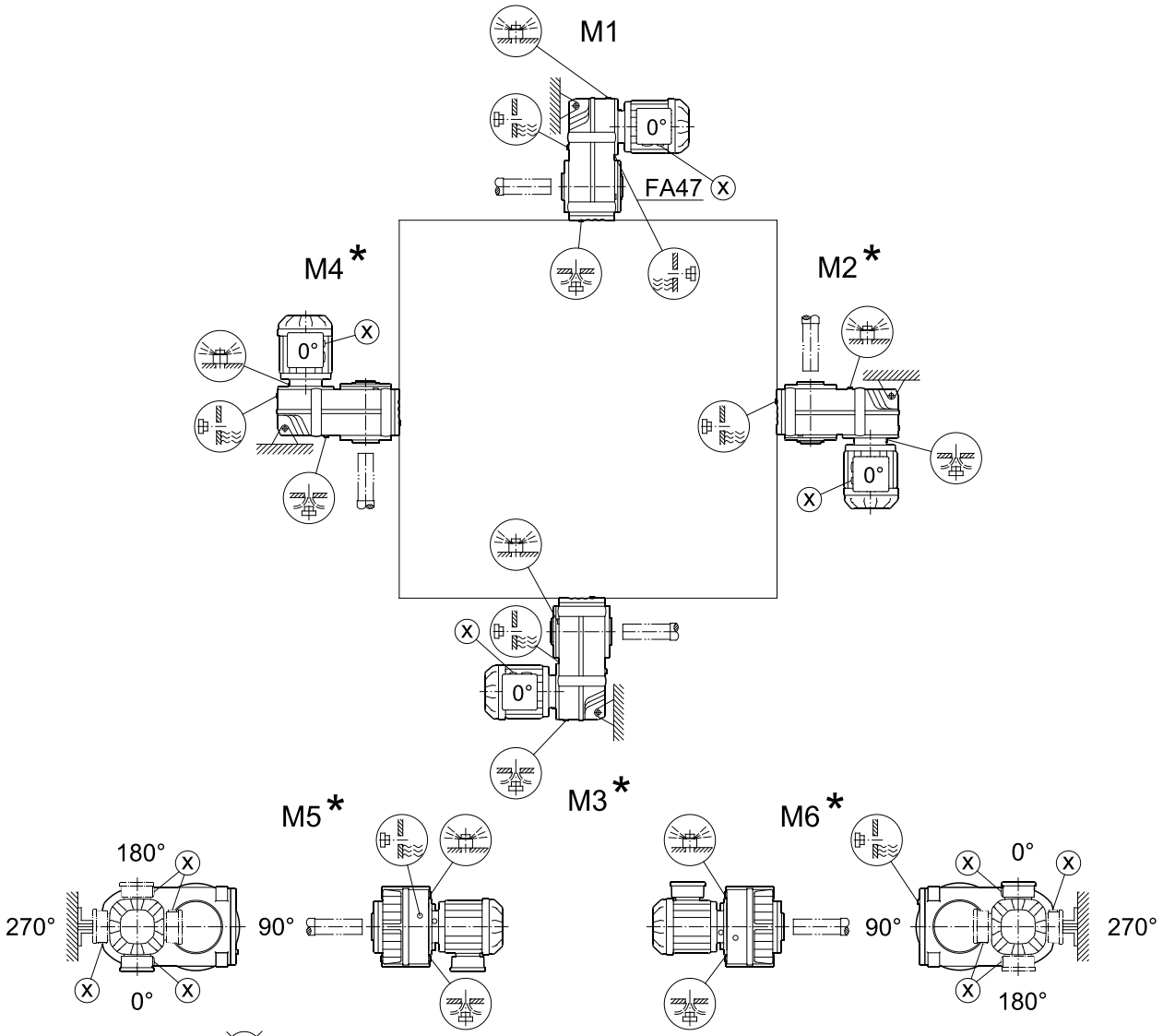

F..27		M1, M3, M5, M6
F..27		M1 - M6
F..27		M1, M3, M5, M6

* (▸ 1051)

3.4.4 Mounting positions of helical-bevel gear units

K/KA..B/KH19B – 29B

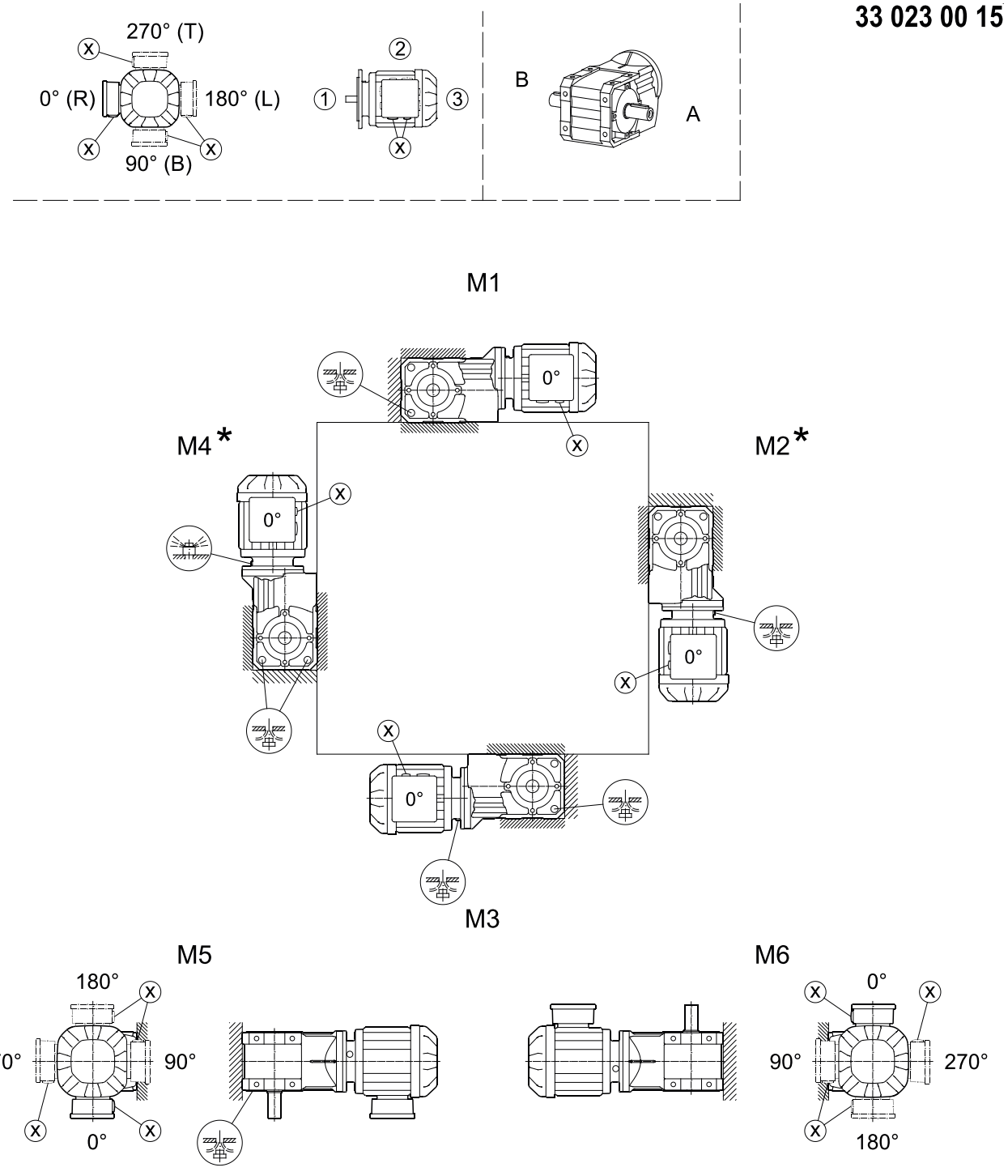

* (▷ 1051)

Observe the information in chapter "Overhung and axial loads of R.., F.., K.., S.., W.. gear units" (▷ 1058).

KF..B/KAF..B/KHF19B – 29B

33 024 00 15

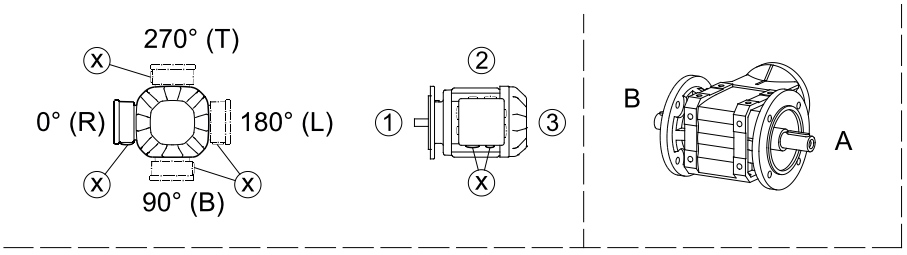

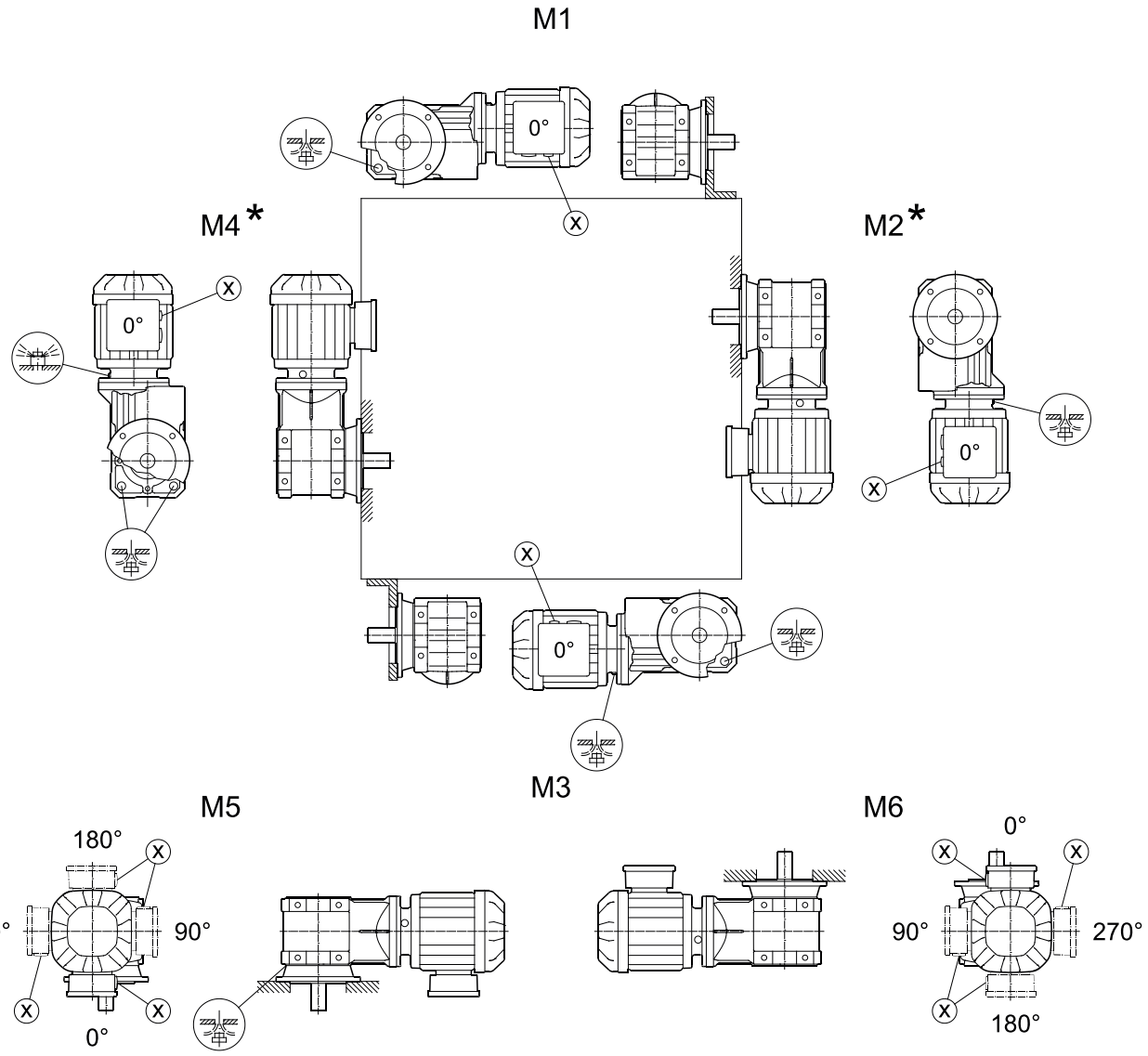

* (▶ 1051)

Observe the information in chapter "Overhung and axial loads of R.., F.., K.., S.., W.. gear units" (▶ 1058).

KA..B/KH19B – 29B

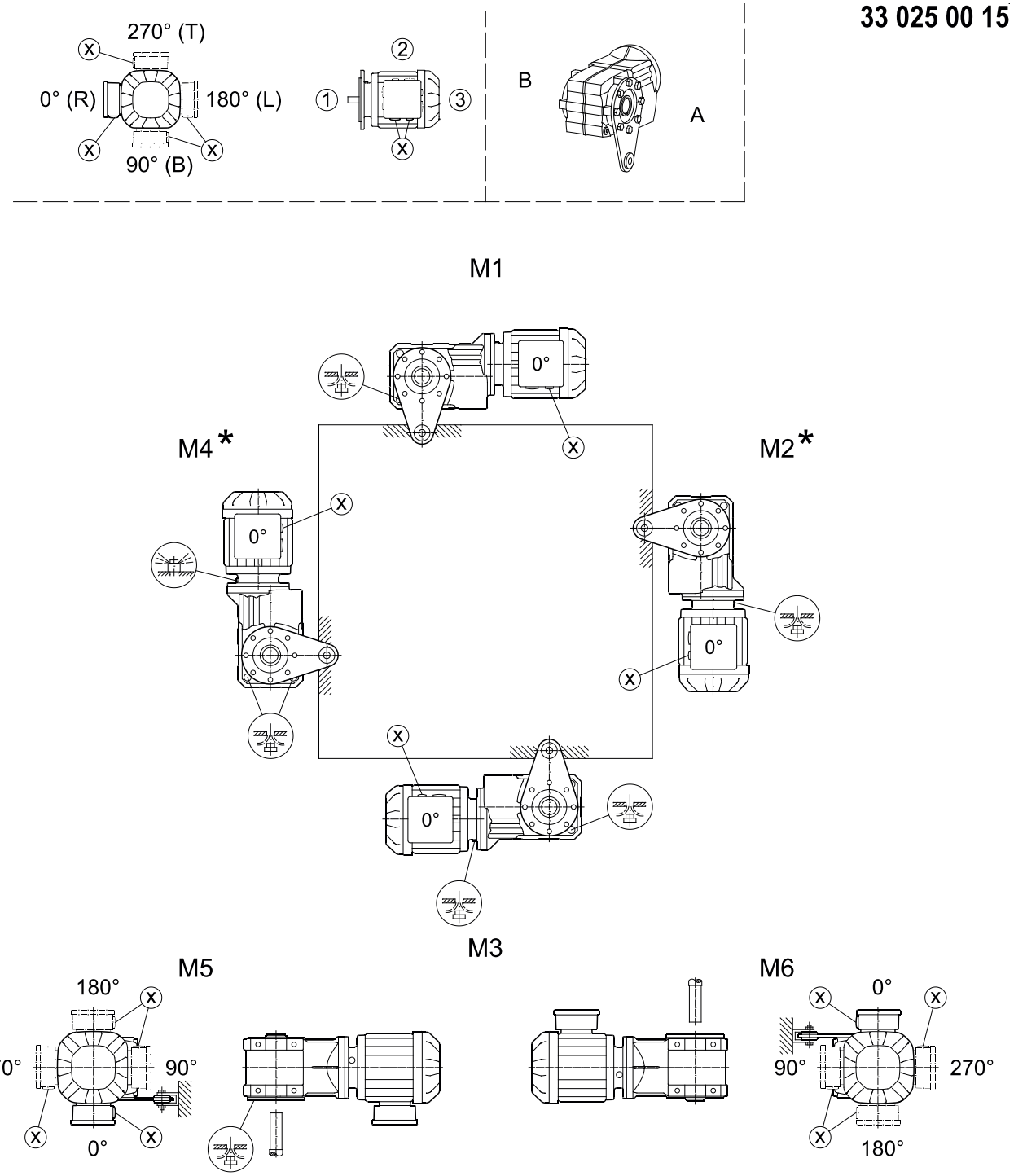

* (▷ 1051)

Observe the information in chapter "Overhung and axial loads of R.., F.., K.., S.., W.. gear units" (▷ 1058).

KF/KAF/KHF19 – 29

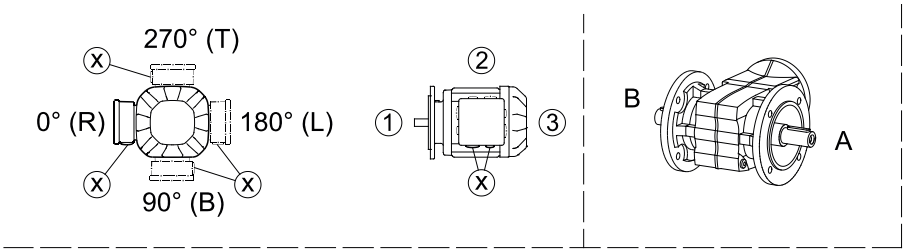

33 026 00 15

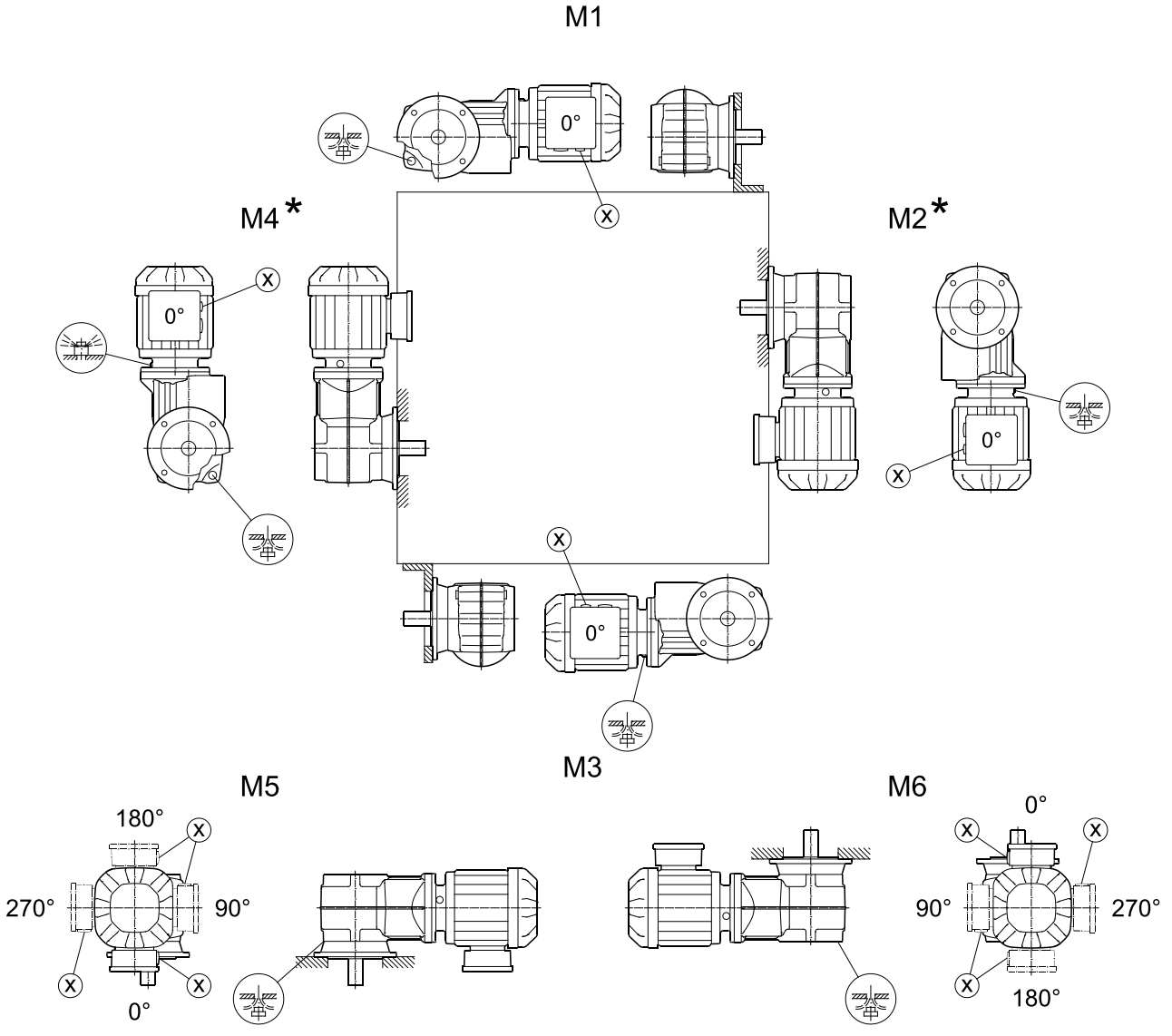

* (▶ 1051)

Observe the information in chapter "Overhung and axial loads of R.., F.., K.., S.., W.. gear units" (▶ 1058).

KA/KH/KT19 – 29

33 027 00 15

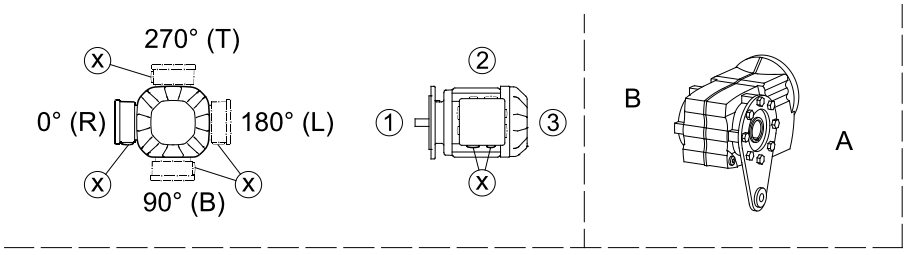

M1

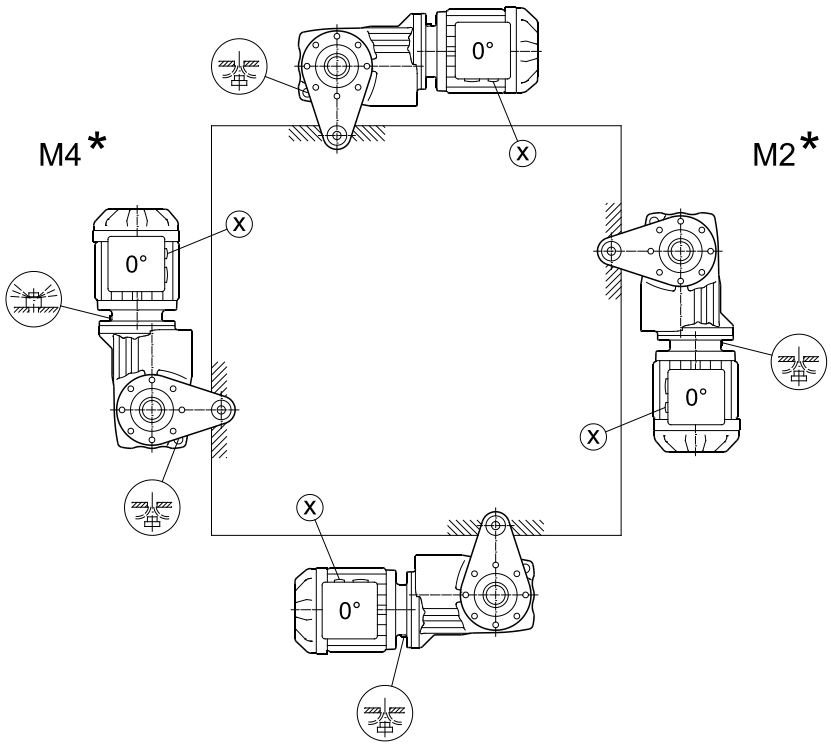

M4 * M2 *

M3

M5

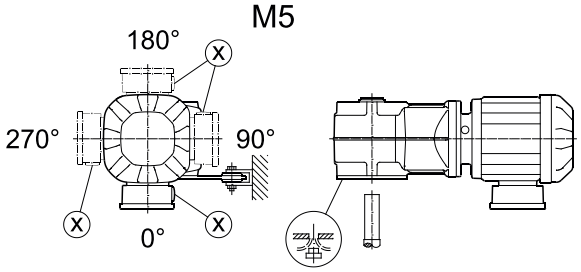

M6

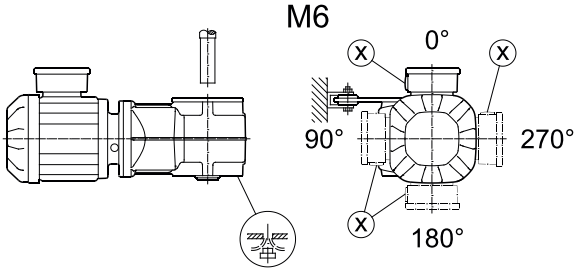

* (▶ 1051)

K/KA..B39 – 49

33 092 03 14

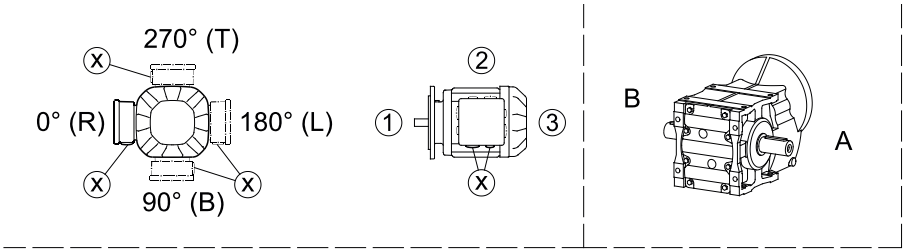

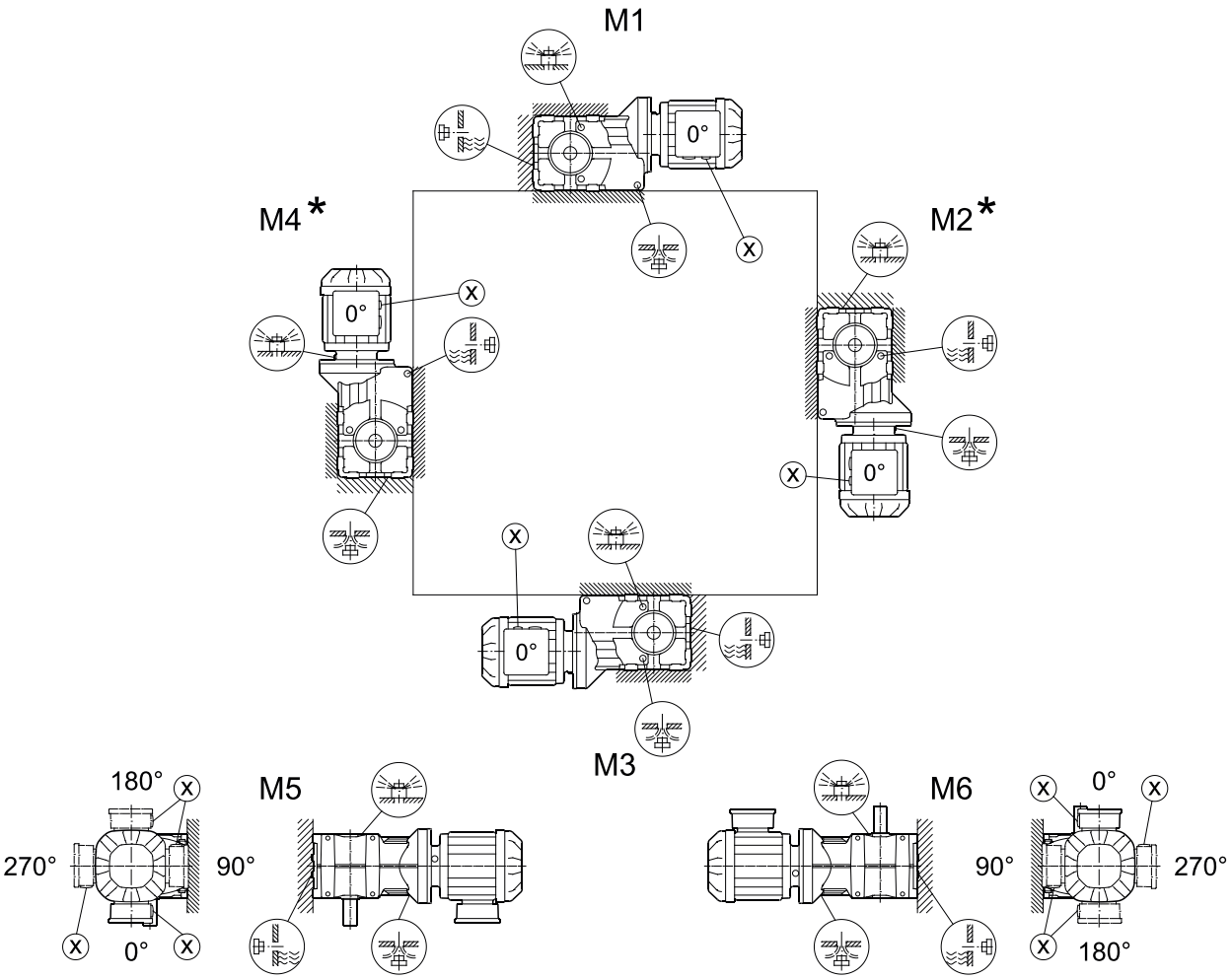

* (▶ 1051)

KF/KAF/KHF39 – 49

33 093 01 14

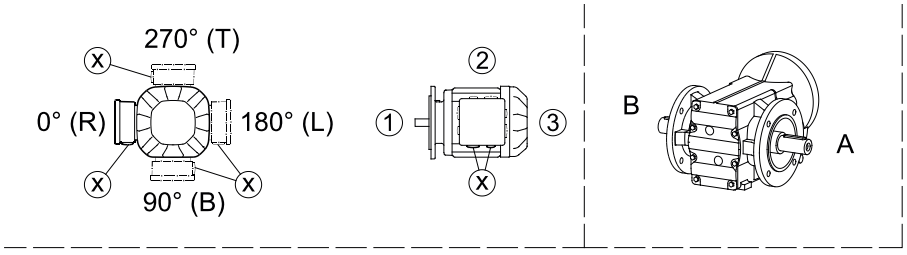

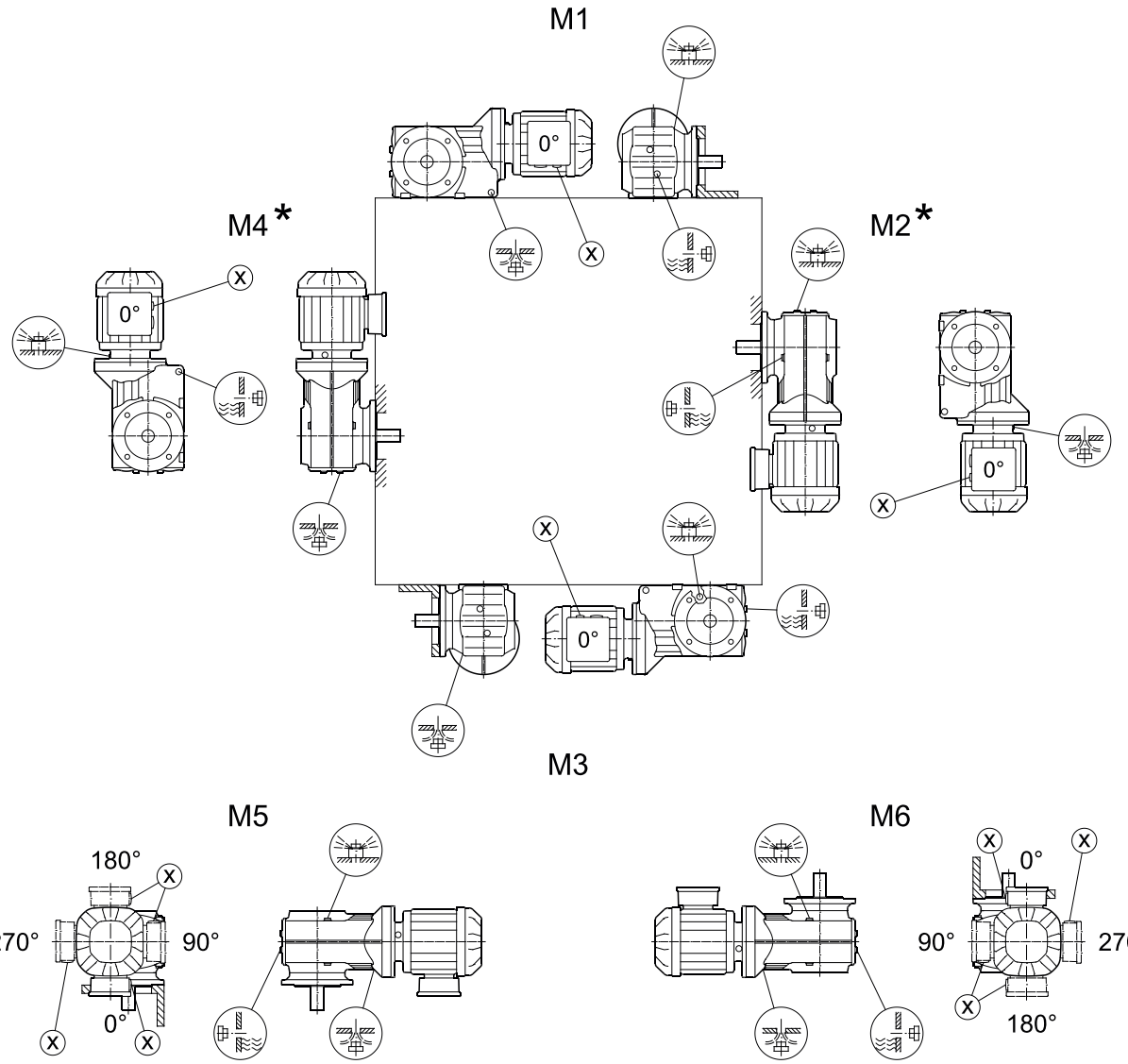

* (▶ 1051)

KA/KH/KT39 – 49

33 094 01 14

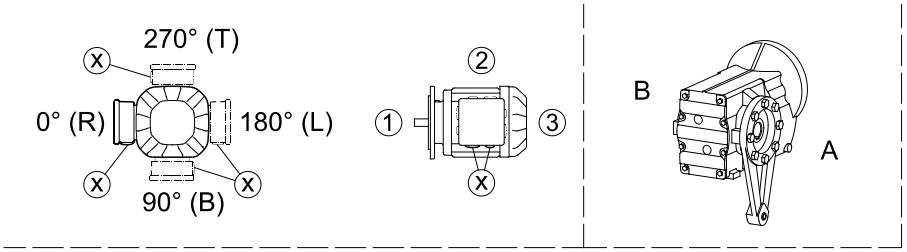

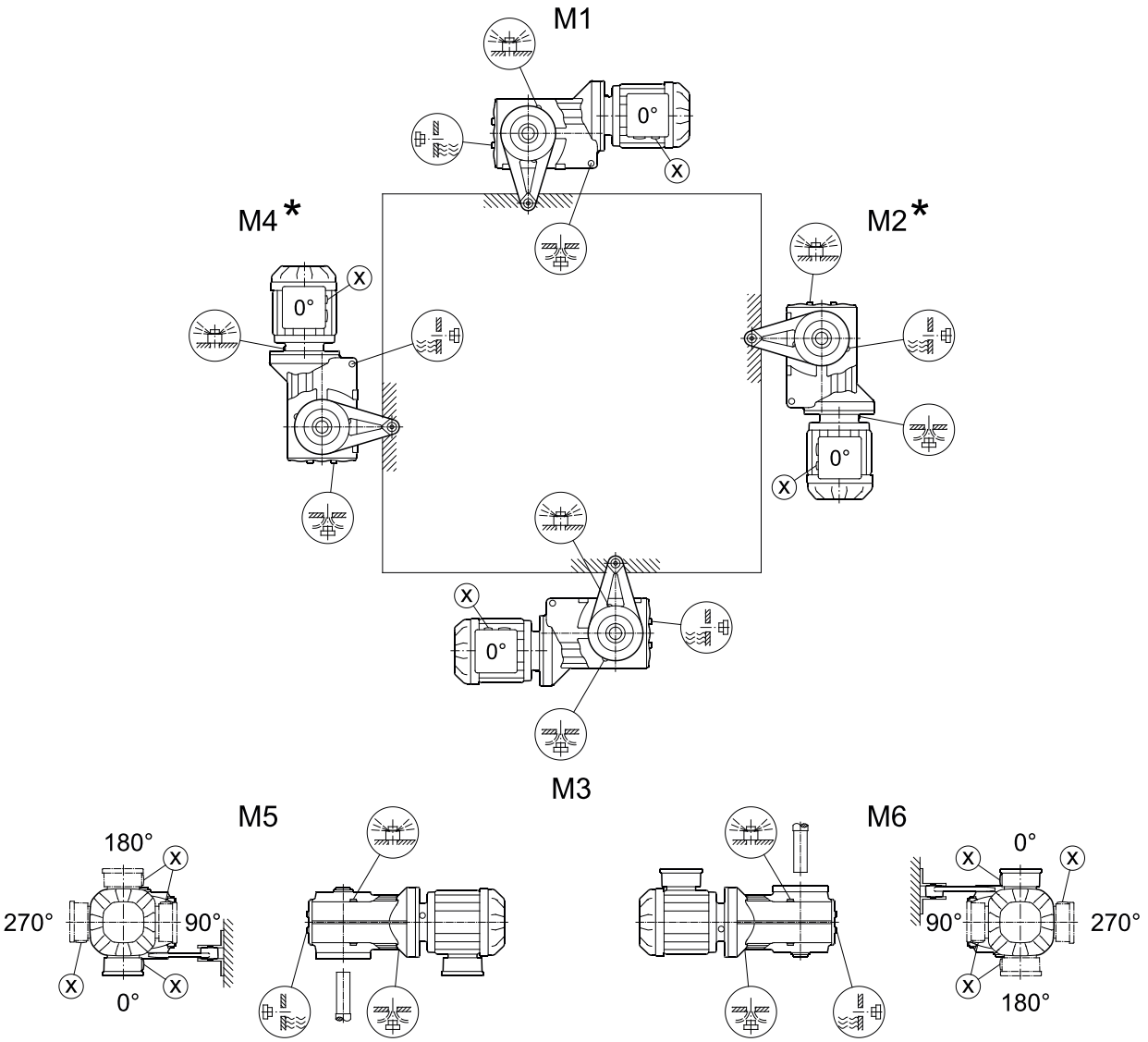

* (▶ 1051)

K37 – 157, KA..B/KH47B – 157B, KV47B – 107B

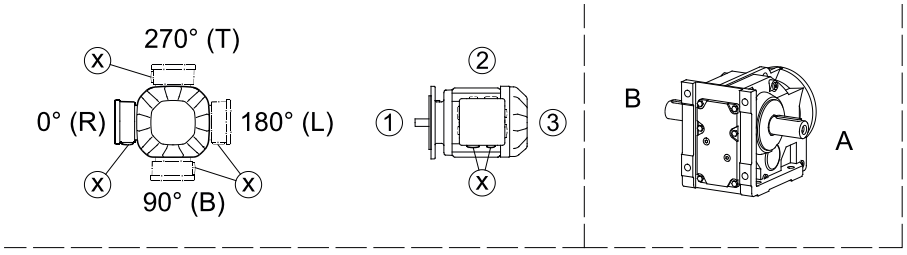

34 025 05 00

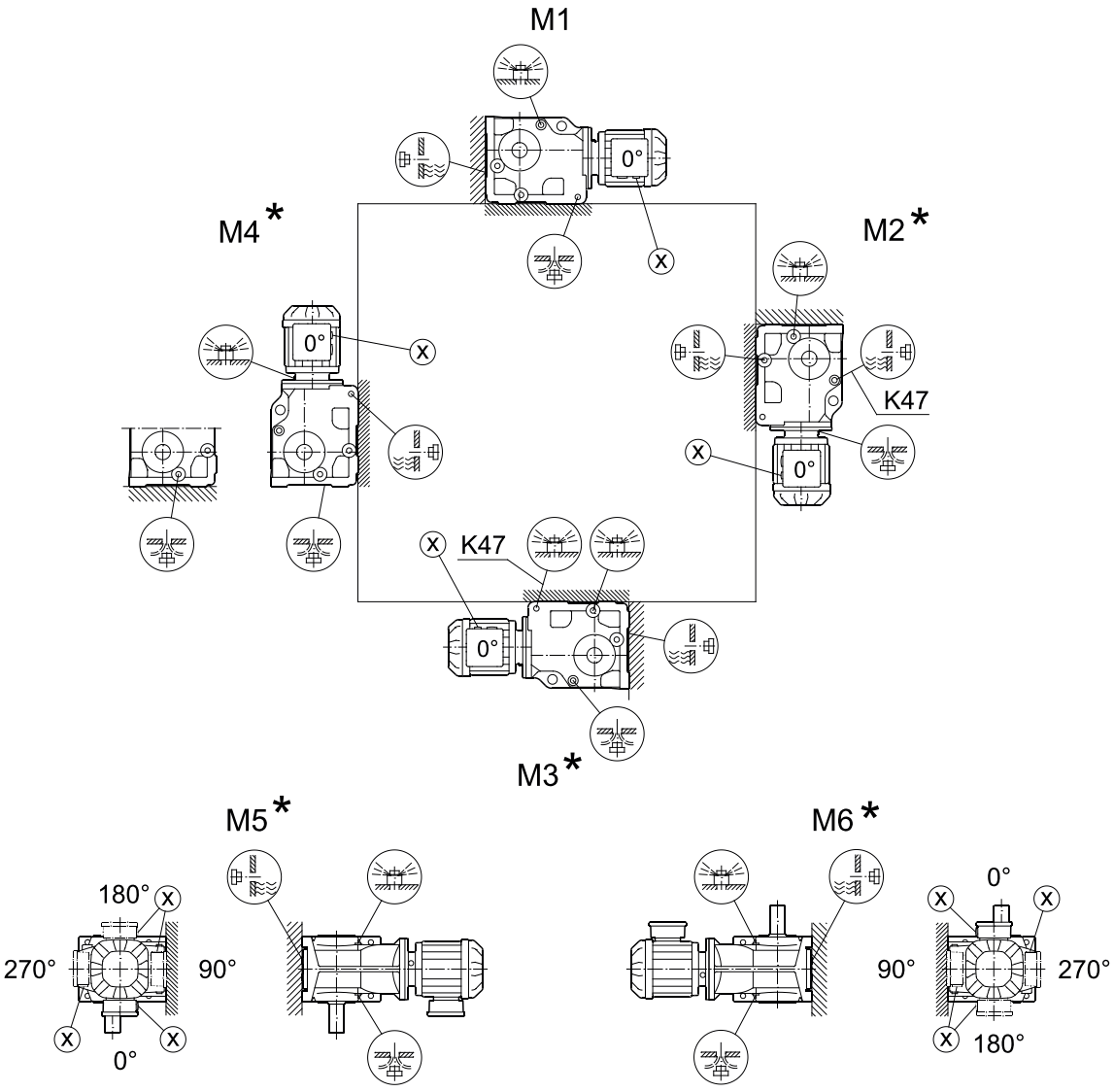

* (▶ 1051)

Observe the information in chapter "Overhung and axial loads of R.., F.., K.., S.., W.. gear units" (▶ 1058).

K167 – 187, KH167B – 187B

34 026 05 00

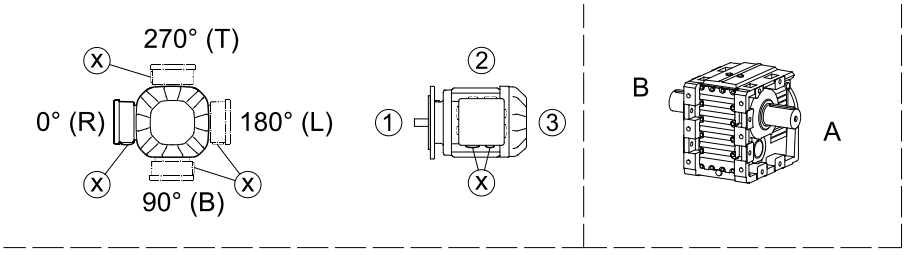

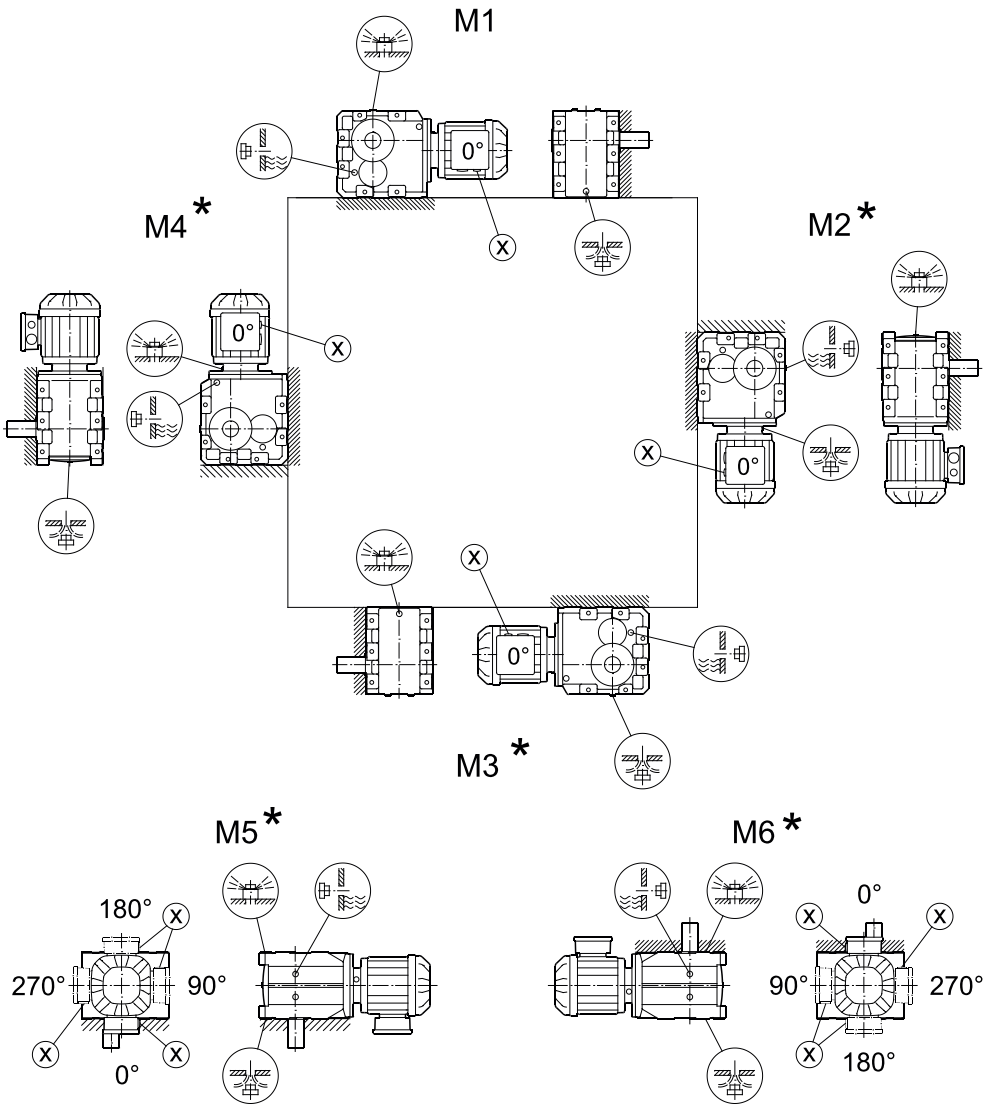

* (▶ 1051)

Observe the information in chapter "Overhung and axial loads of R.., F.., K.., S.., W.. gear units" (▶ 1058).

KF/KAF/KHF/KZ/KAZ/KHZ37 – 157, KVF/KVZ37 – 107, KM/KAM67 – 157

34 027 04 00

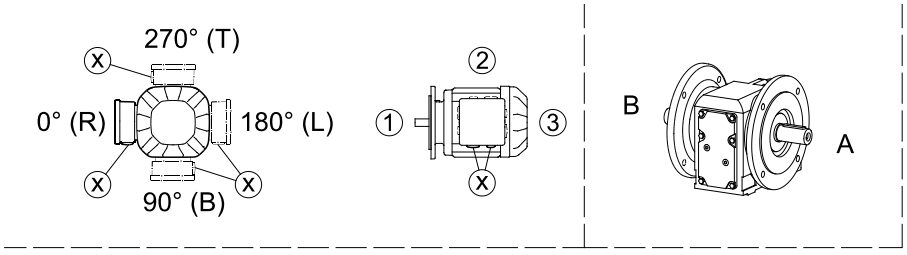

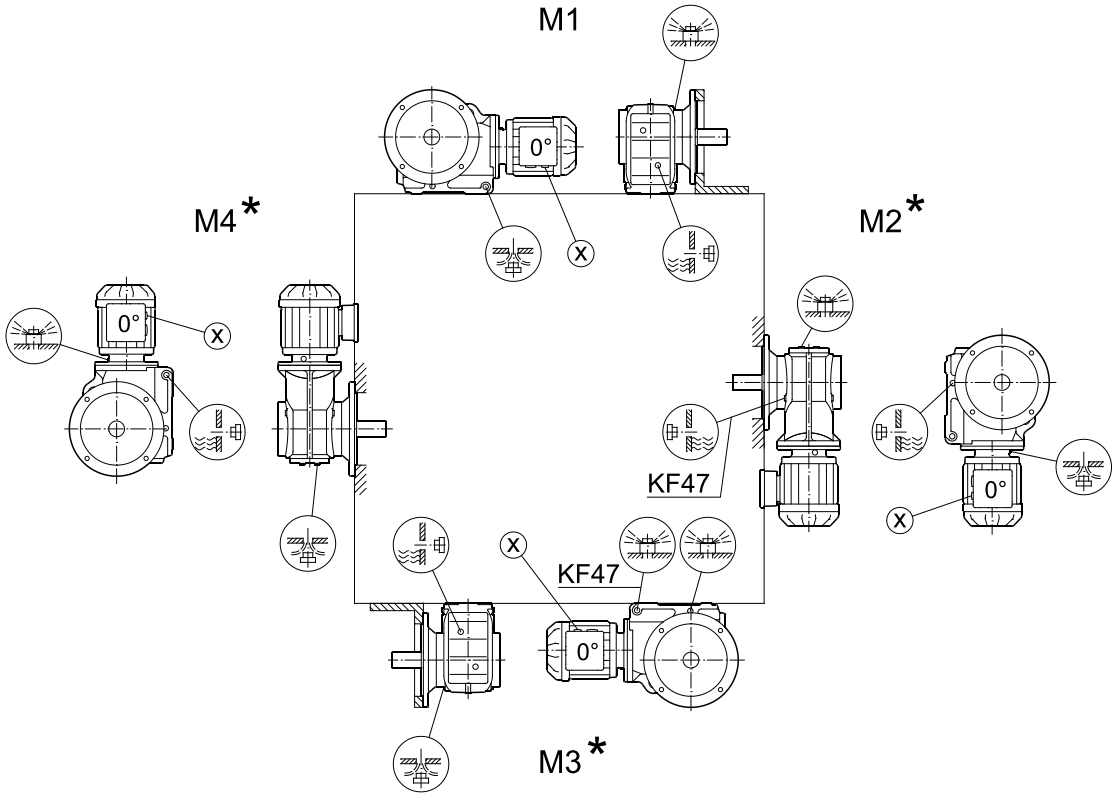

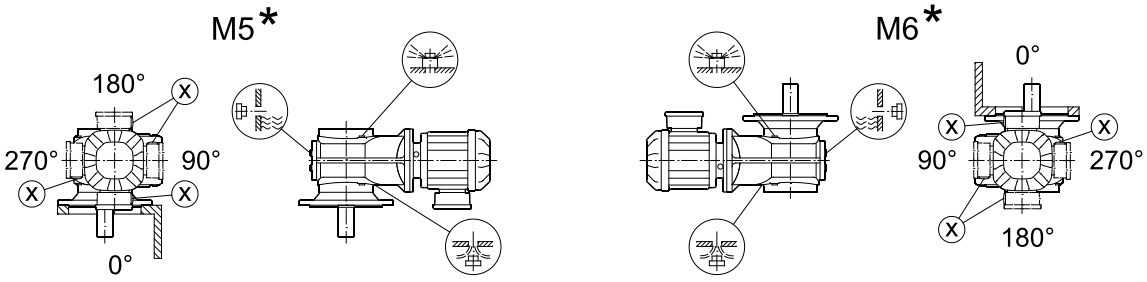

* (▶ 1051)

KA/KH37 – 157, KV37 – 107, KT37 – 157

39 025 05 00

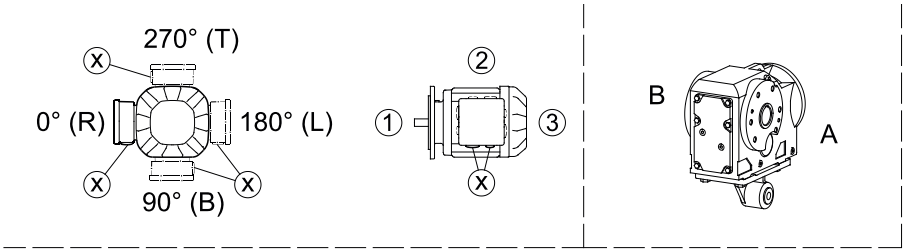

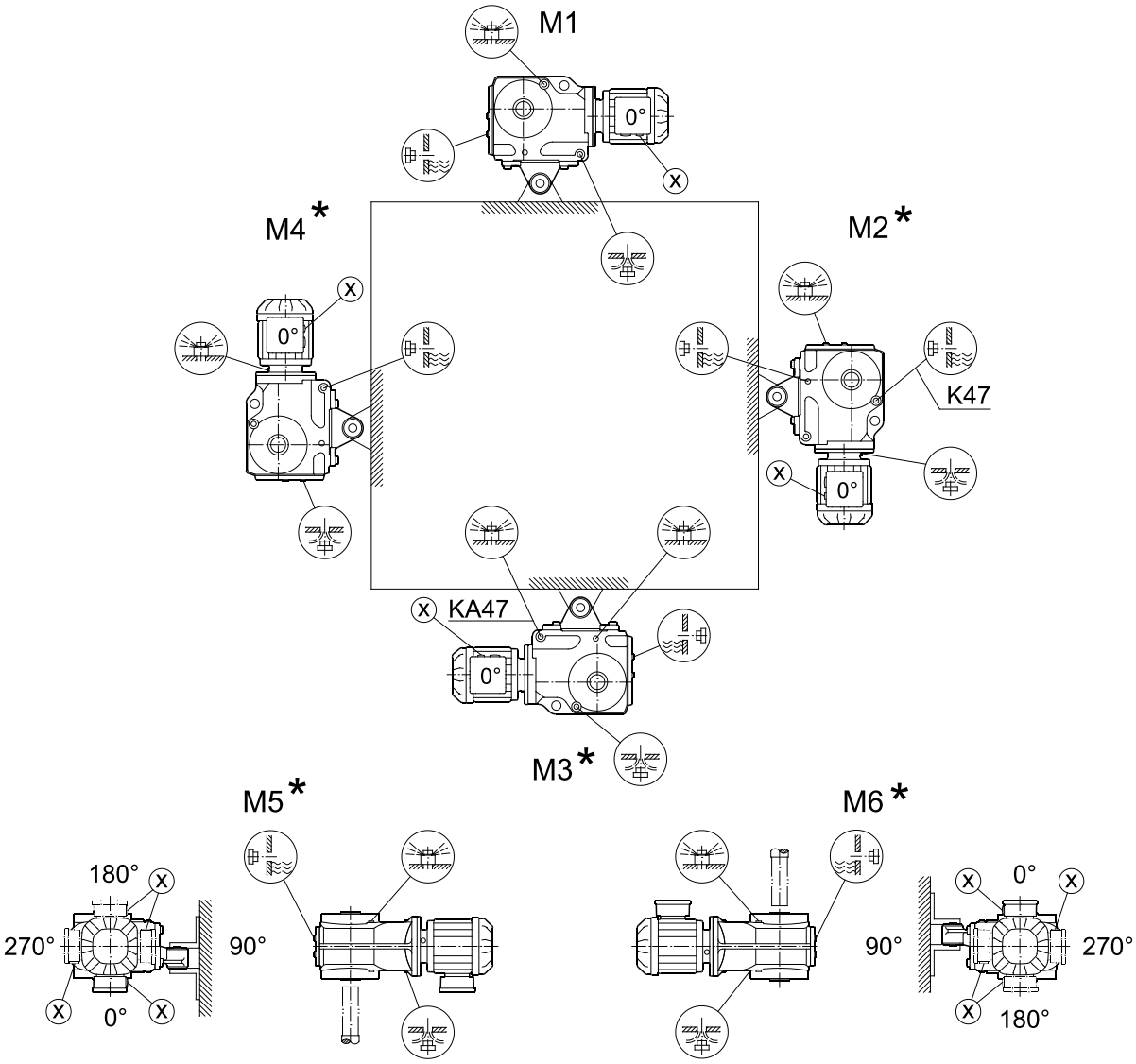

* (▶ 1051)

KH167 – 187

39 026 05 00

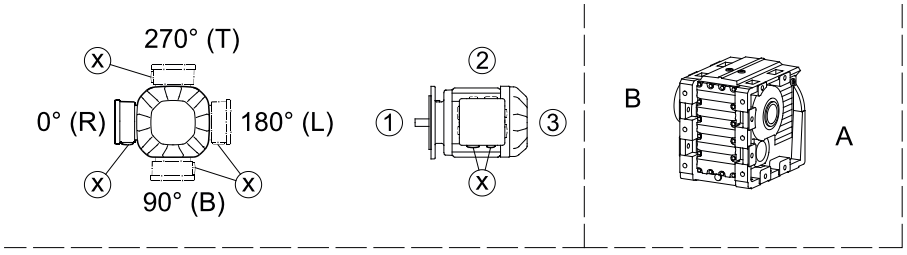

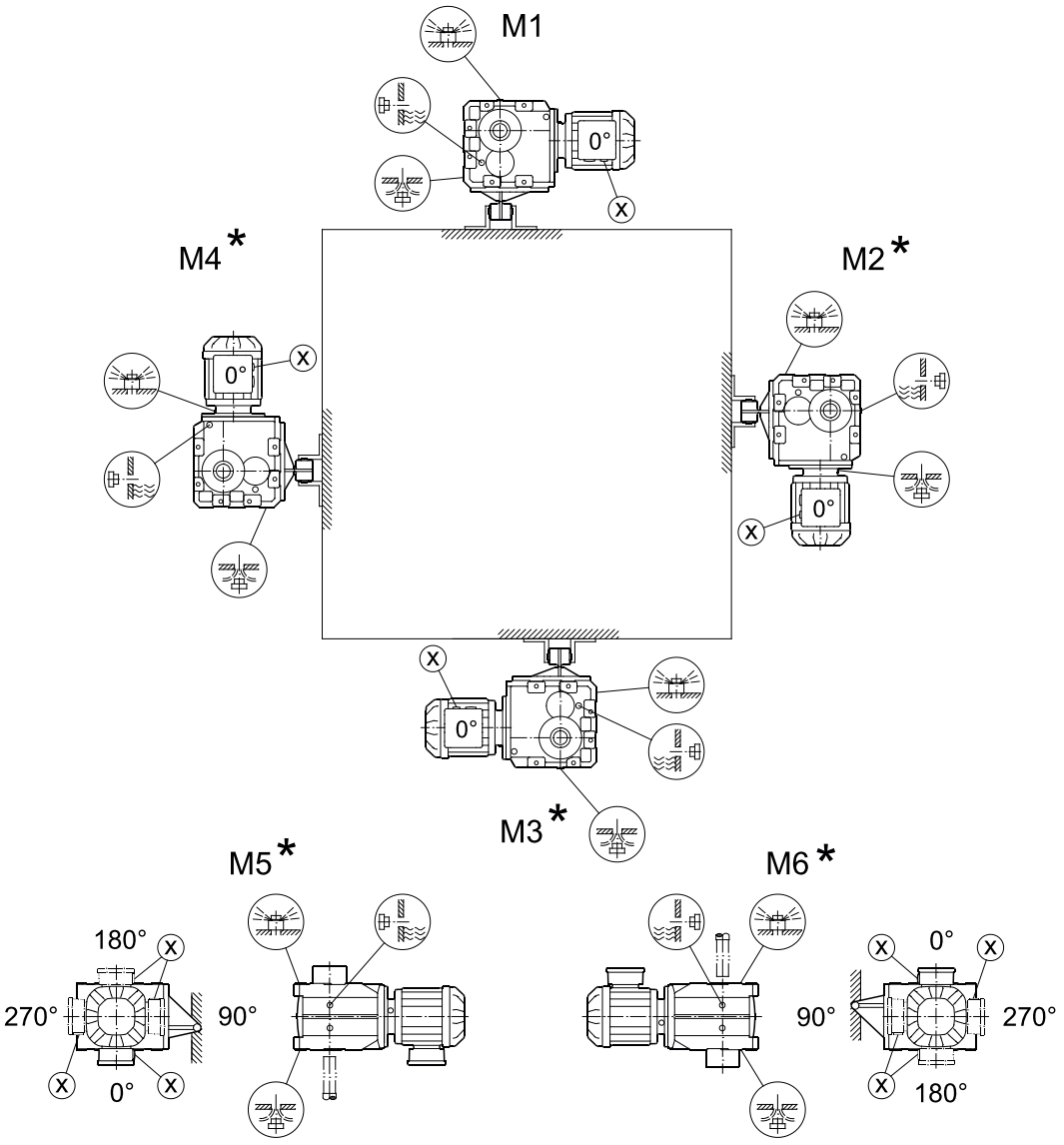

* (▶ 1051)

3.4.5 Mounting positions of helical-worm gear units

S37

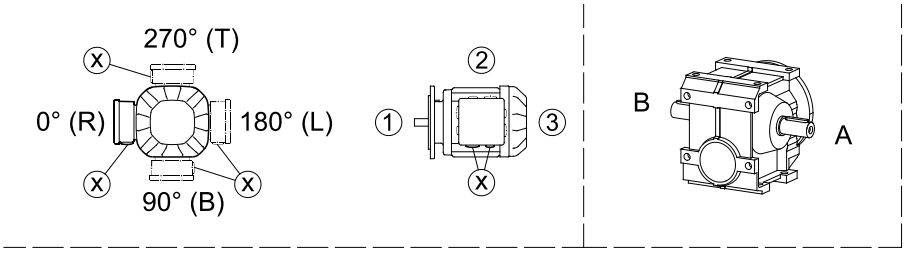

05 025 05 00

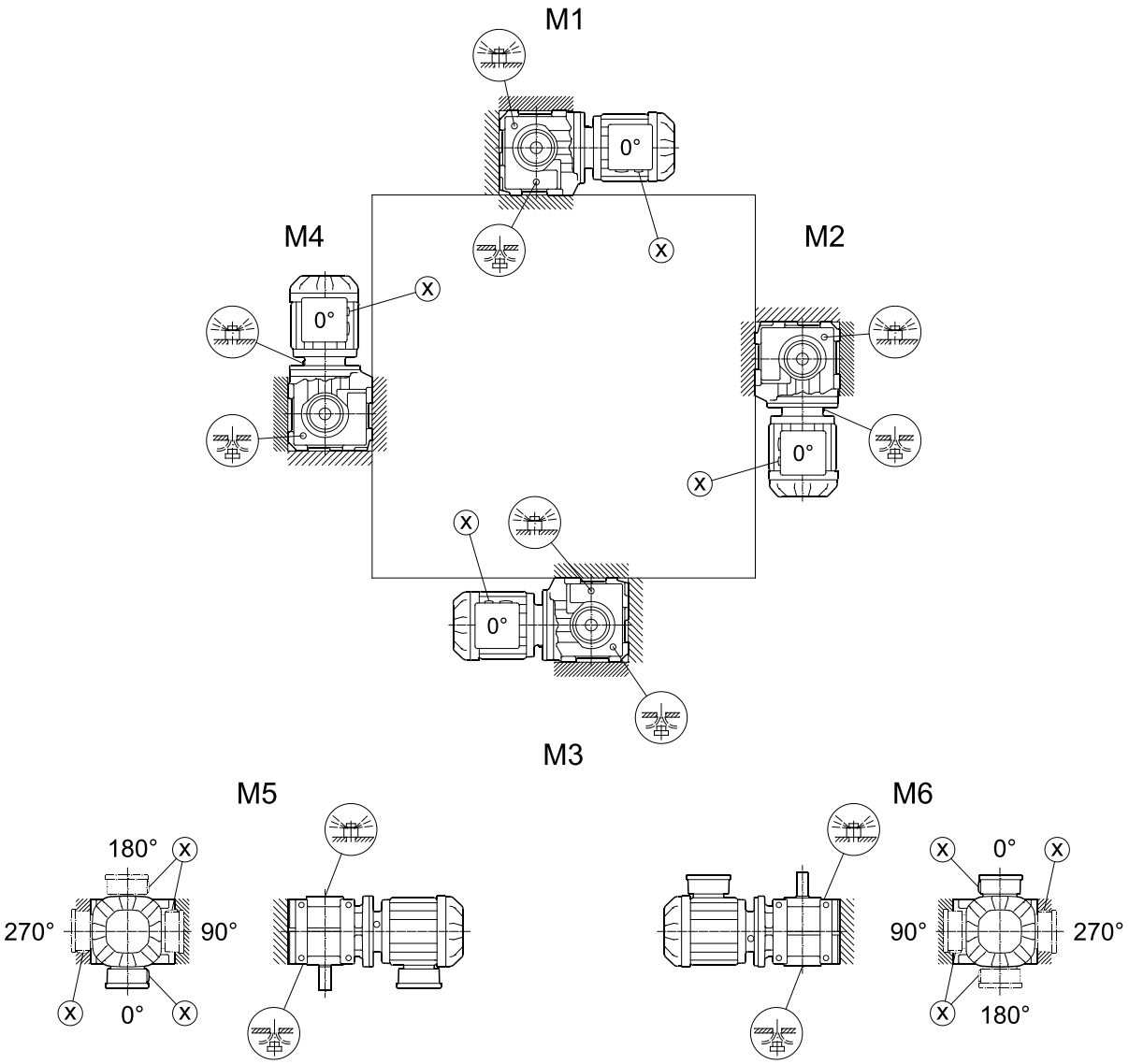

Observe the information in chapter "Overhung and axial loads of R.., F.., K.., S.., W.. gear units" (▶ 1058).

S47 – S97

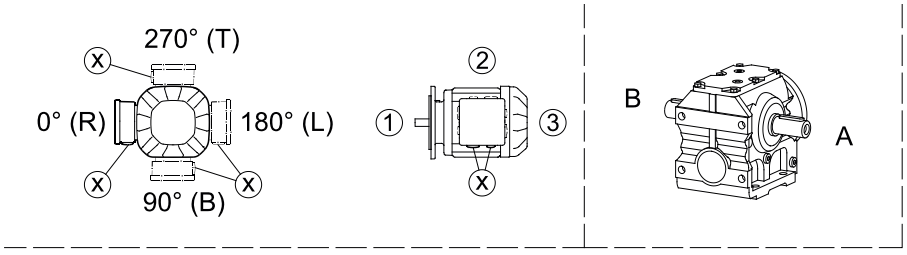

05 026 04 00

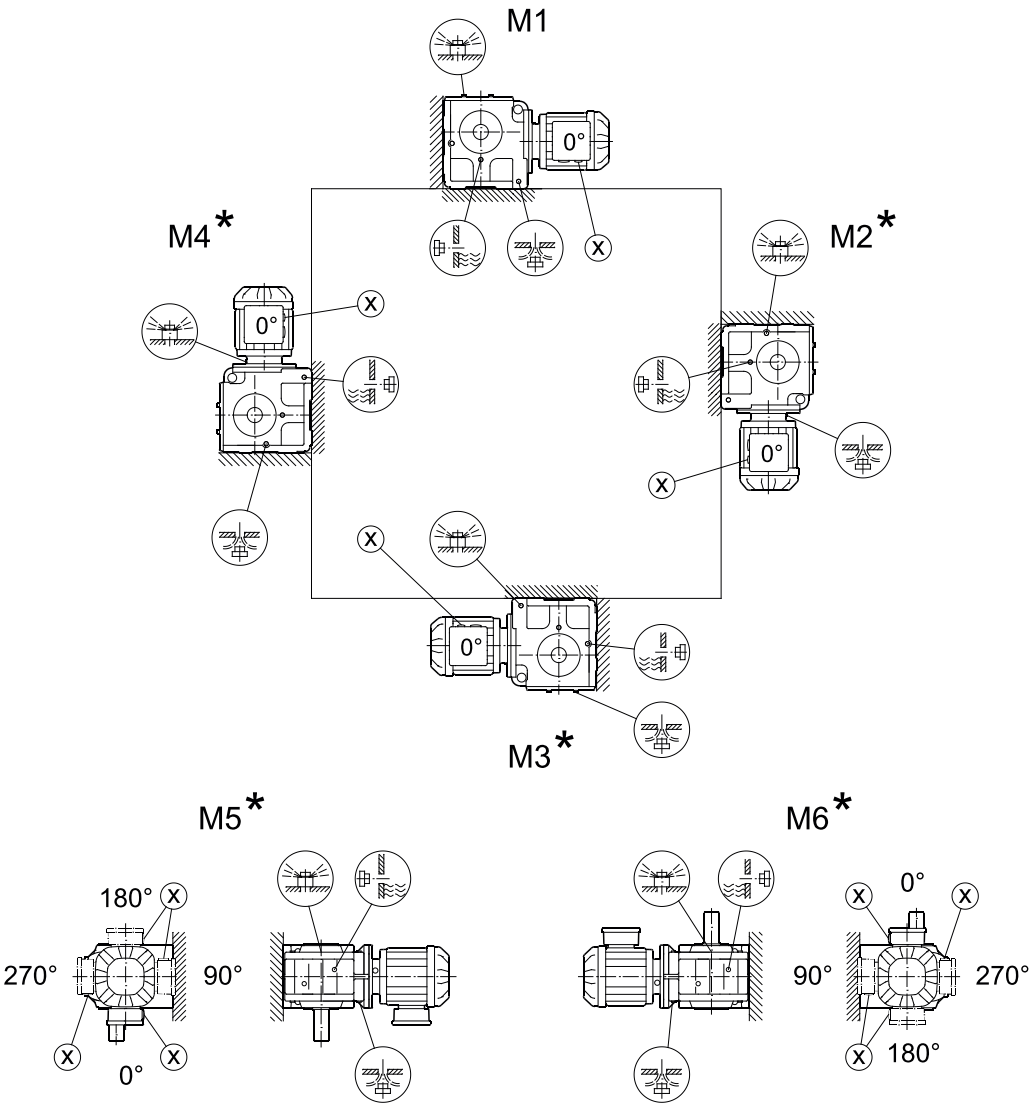

* (▷ 1051)

Observe the information in chapter "Overhung and axial loads of R.., F.., K.., S.., W.. gear units" (▷ 1058).

SF/SAF/SHF37

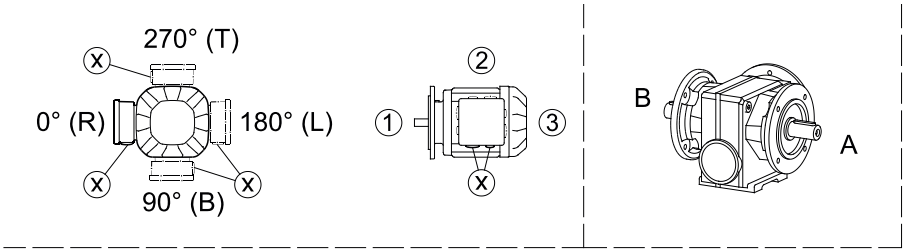

05 027 05 00

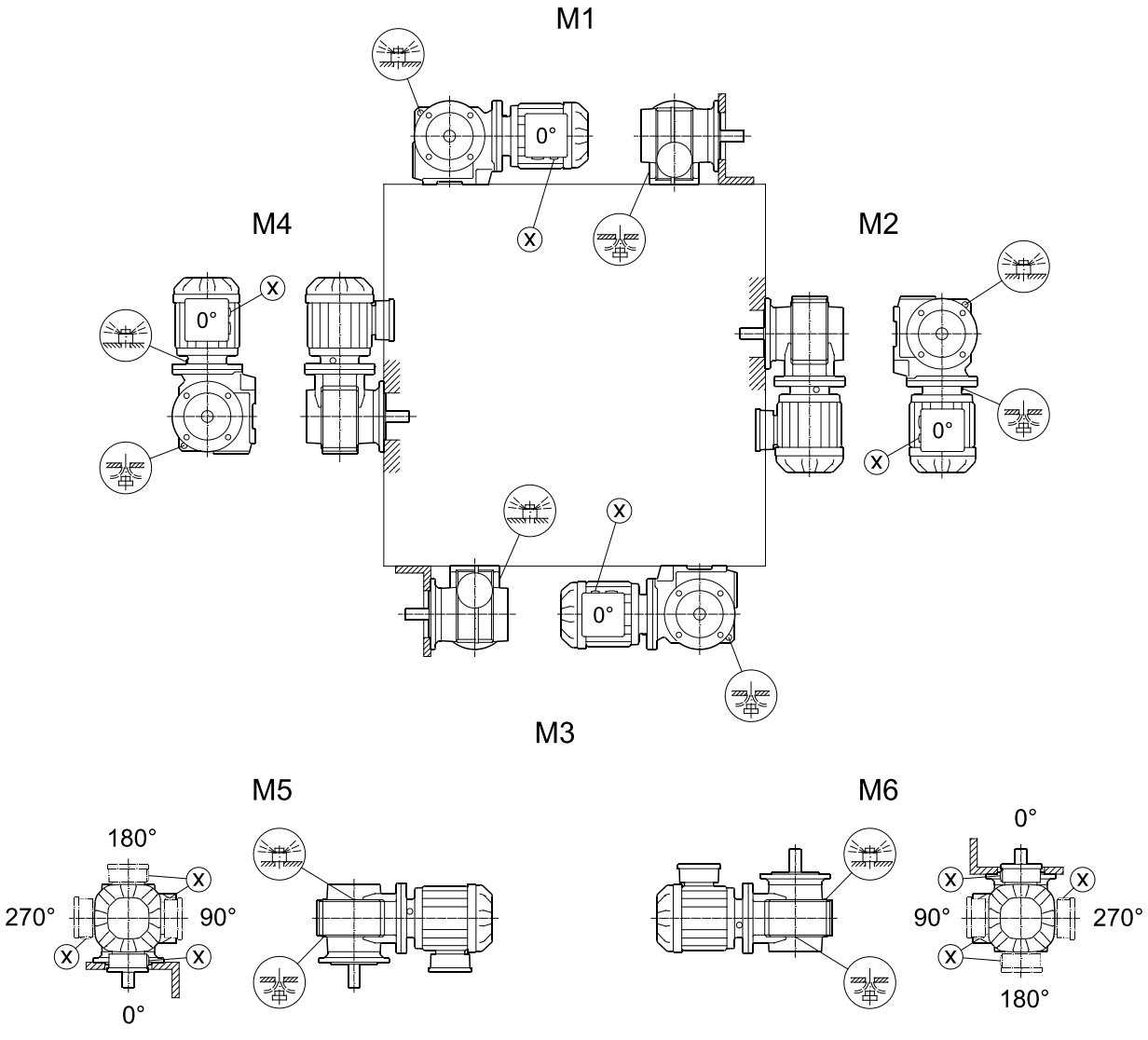

SF/SAF/SHF/SAZ/SHZ47 – 97

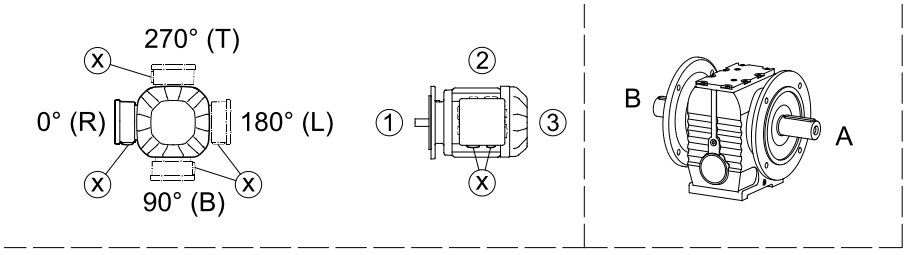

05 028 04 00

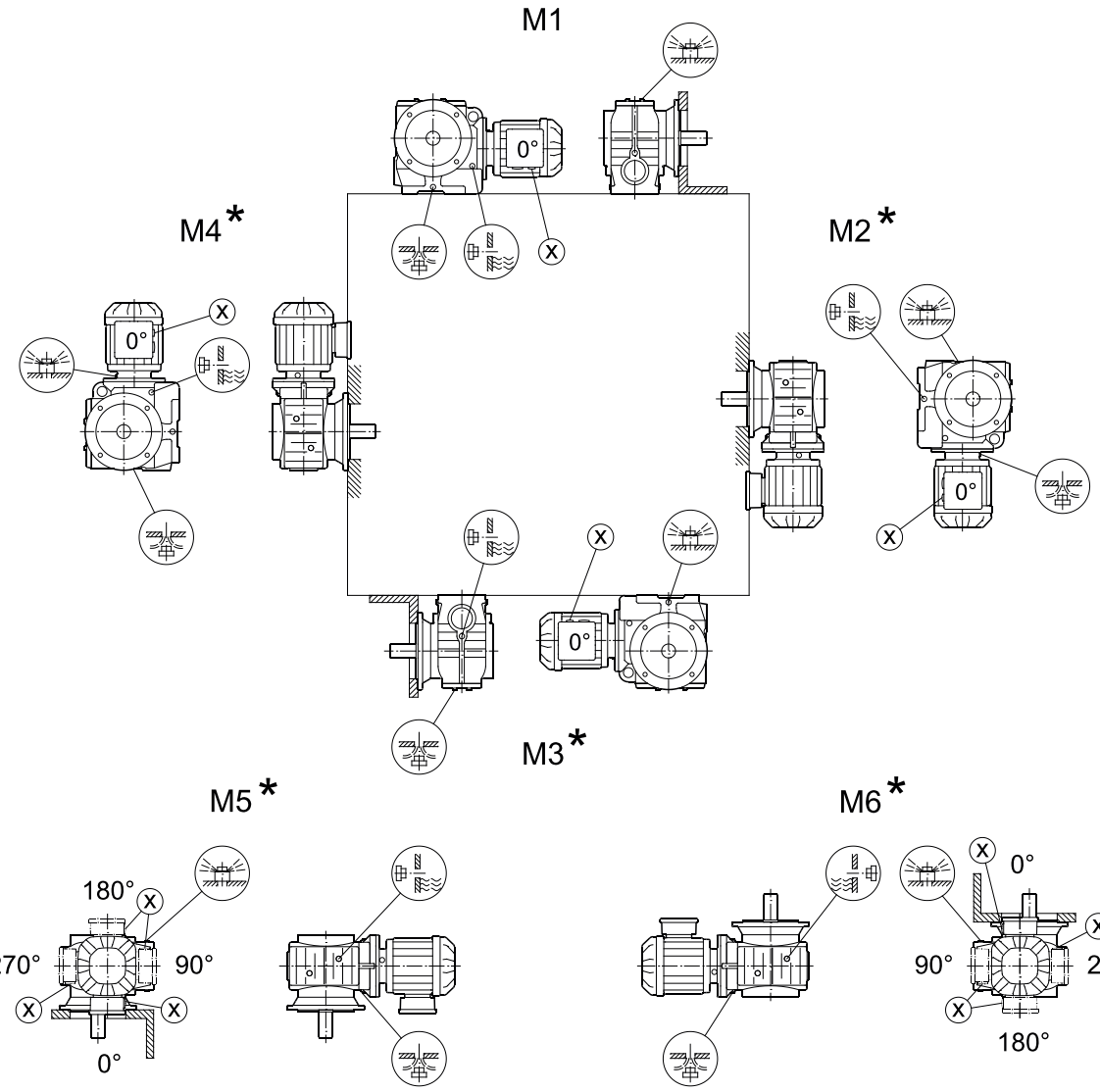

* (▶ 1051)

SA/SH/ST37

28 020 06 00

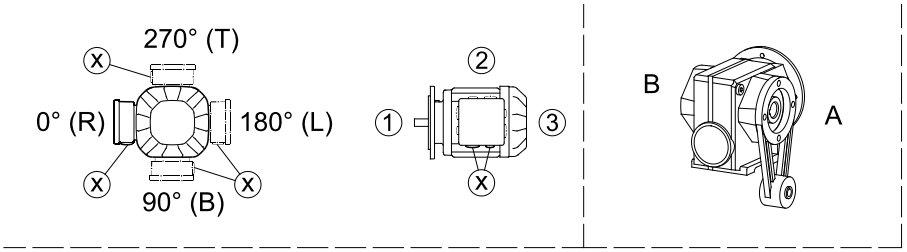

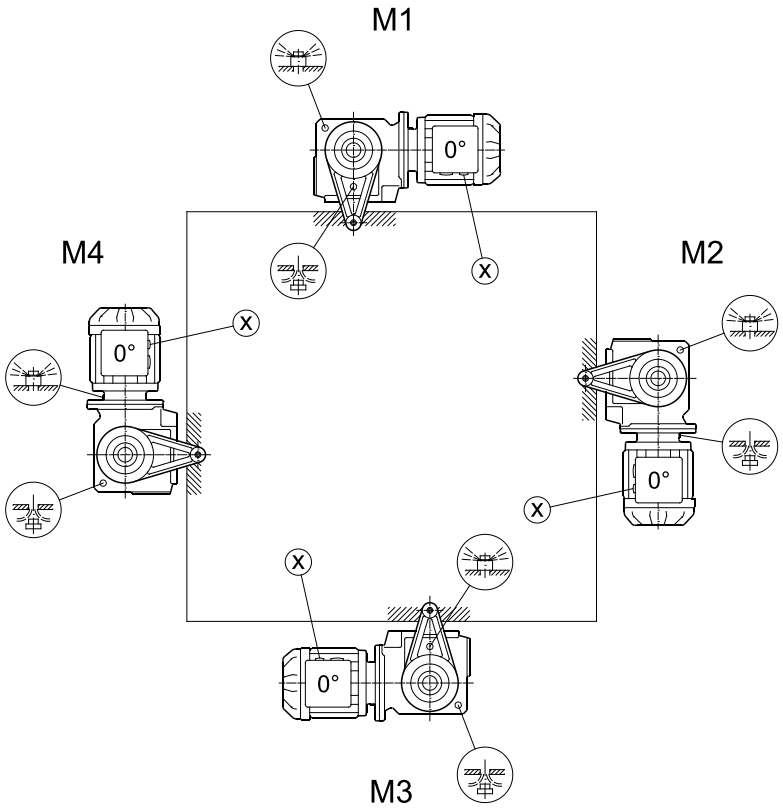

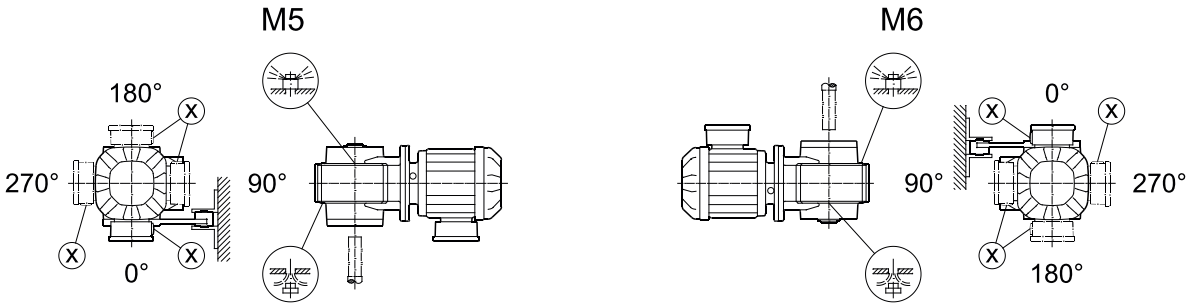

SA/SH/ST47 – 97

28 021 04 00

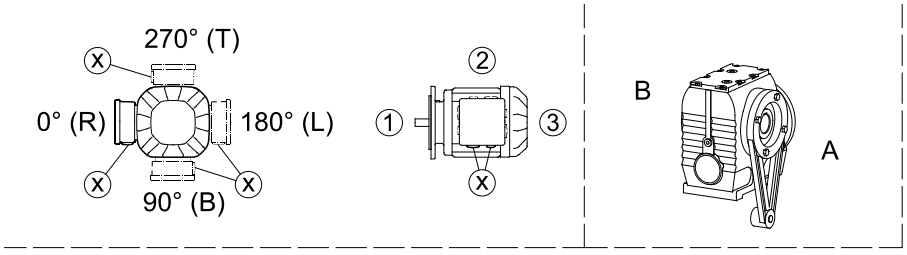

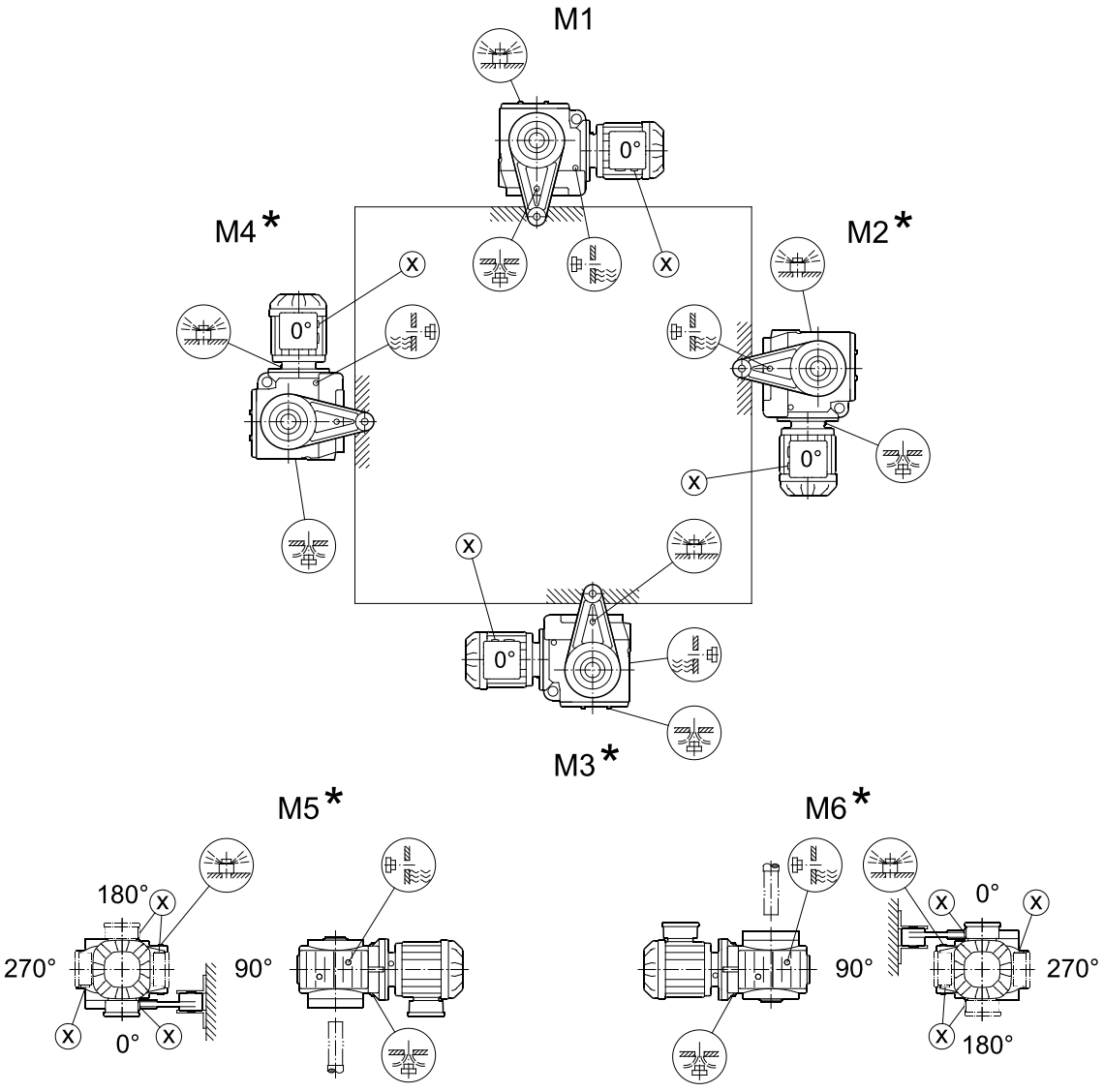

* (▶ 1051)

3.4.6 Mounting positions SPIROPLAN® right-angle gear units

W10 – 30

20 001 02 02

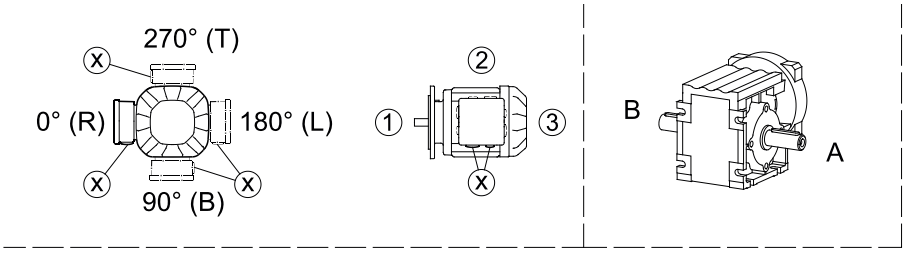

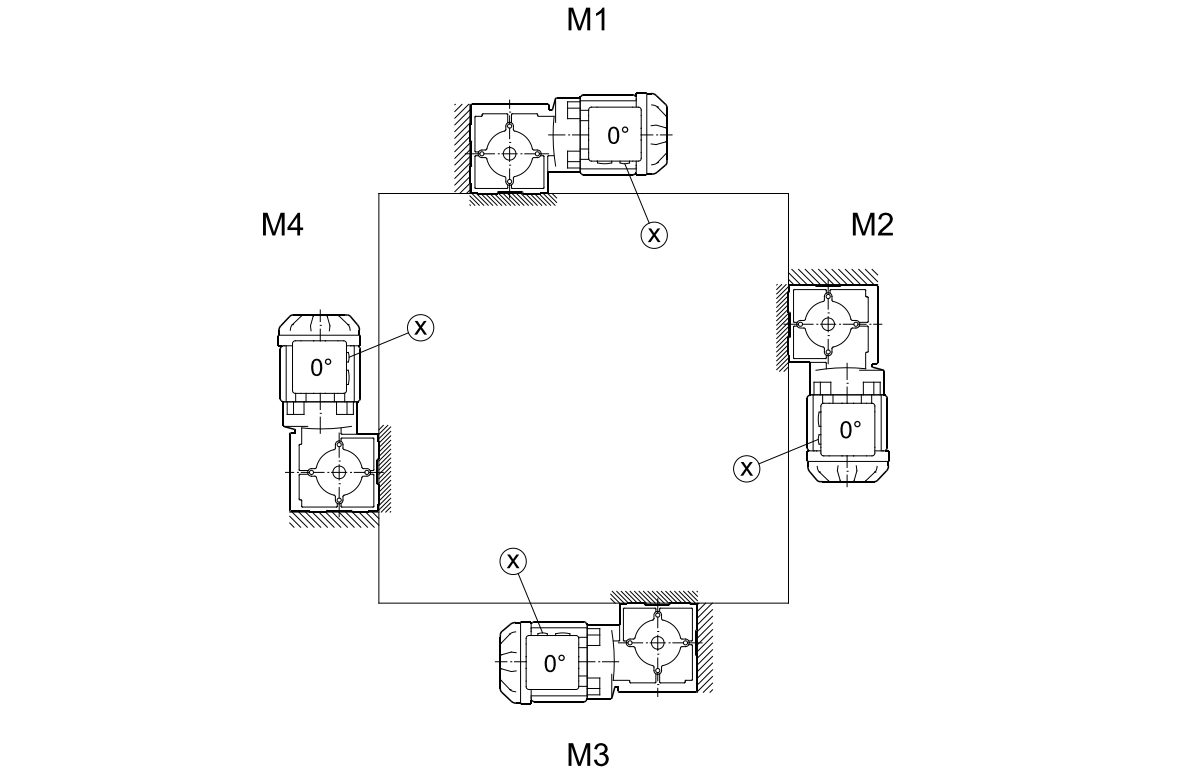

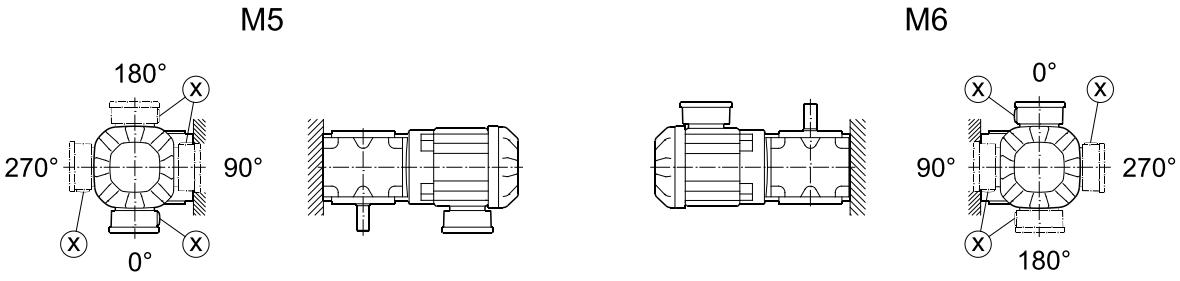

WF10 – 30

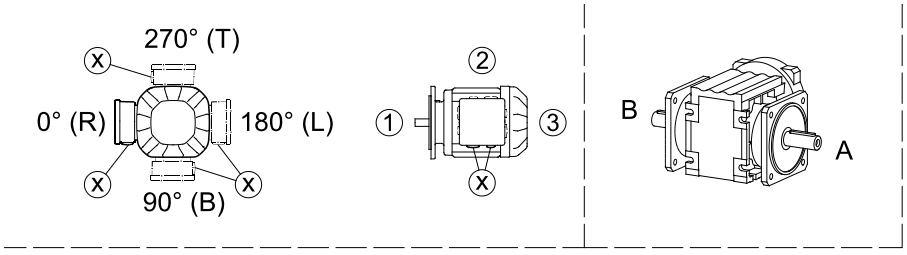

20 002 02 02

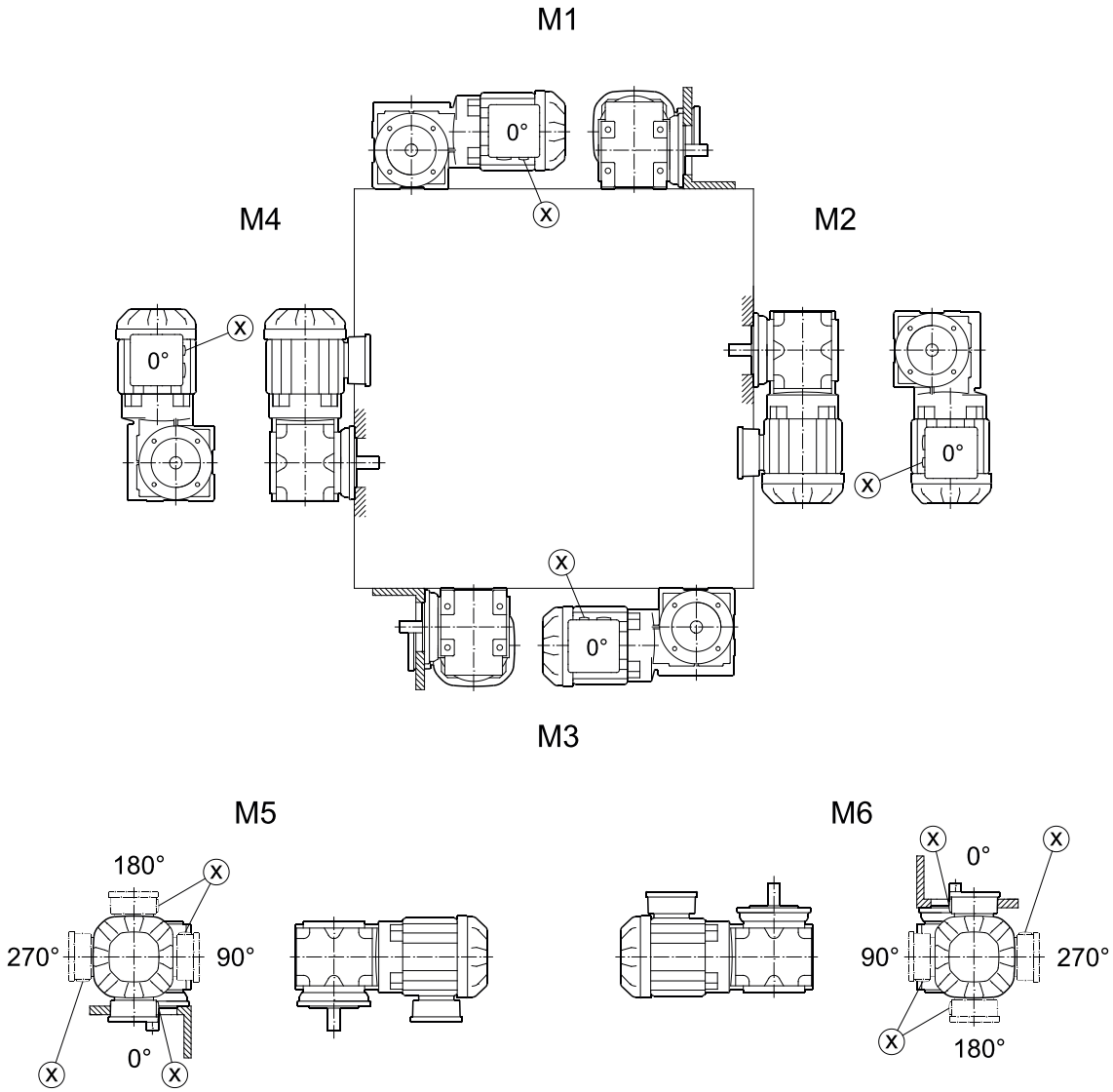

WA10 – 30

20 003 03 02

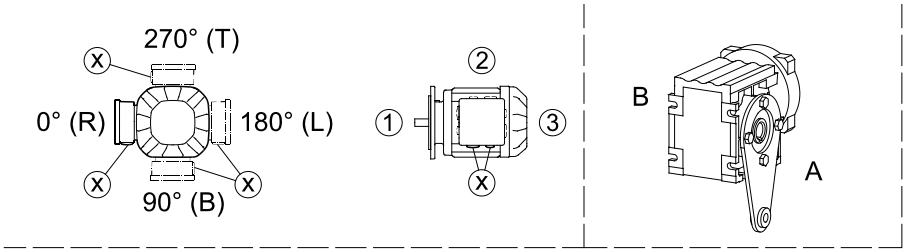

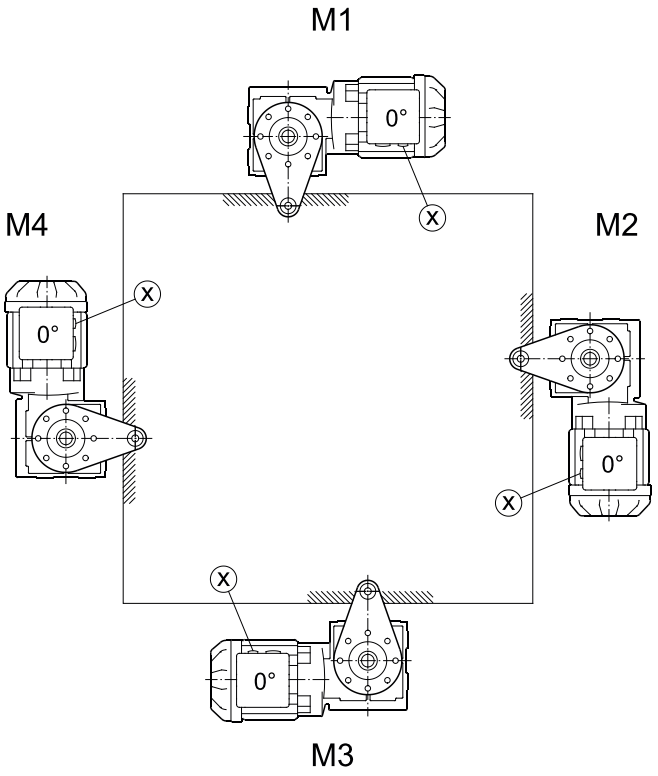

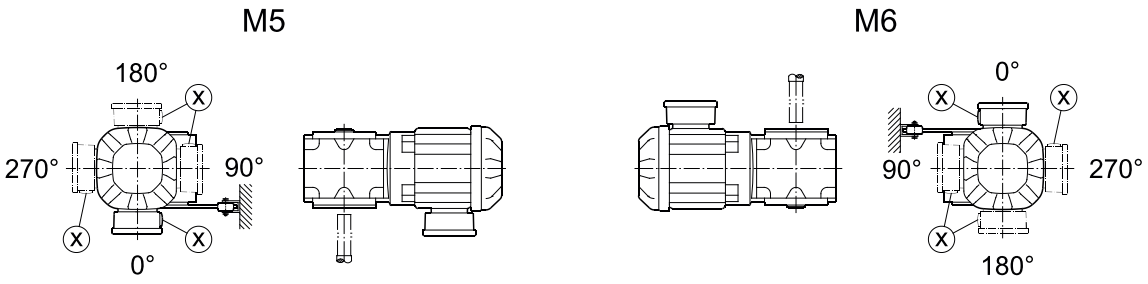

WF/WAF19 – 59, WHF29 – 59, WF/WAF29-59HG, WHF49-59HG

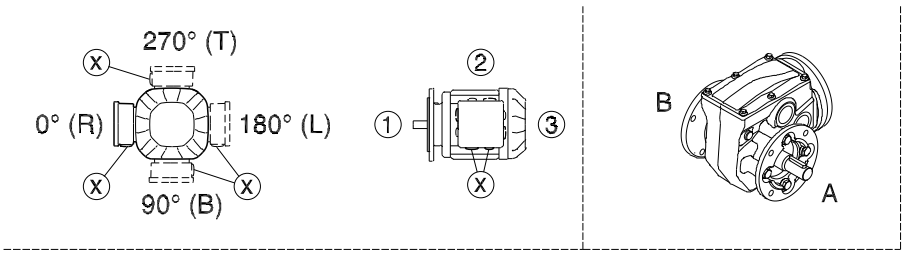

20 175 01 20

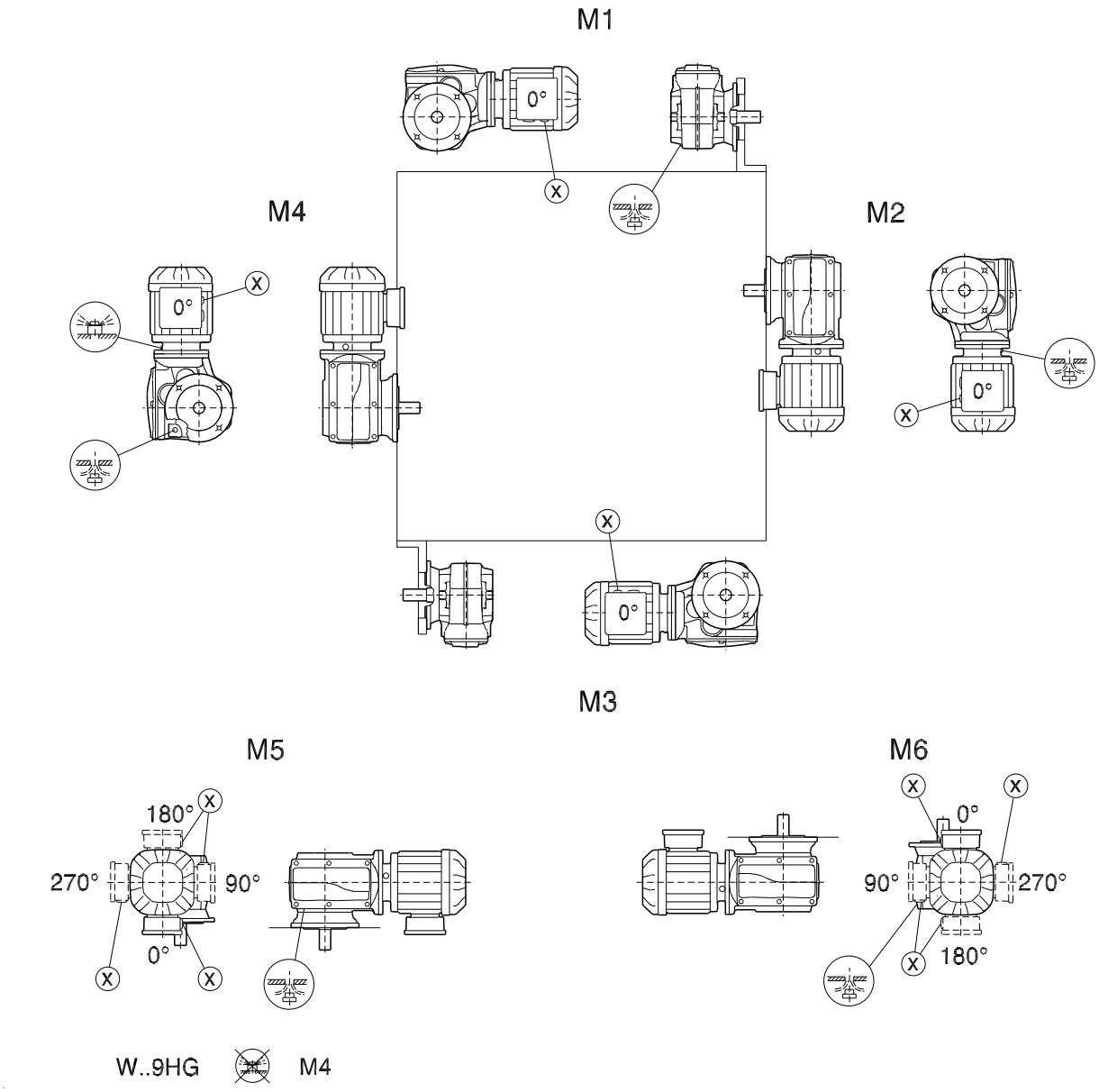

WA19 – 59, WH/WT29 – 59, WA/WH/WT29-59HG

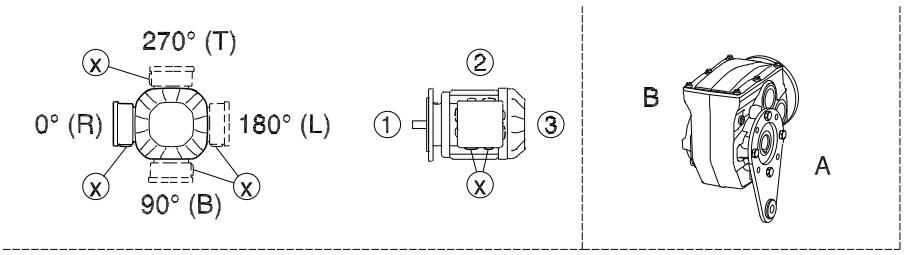

20 176 01 20

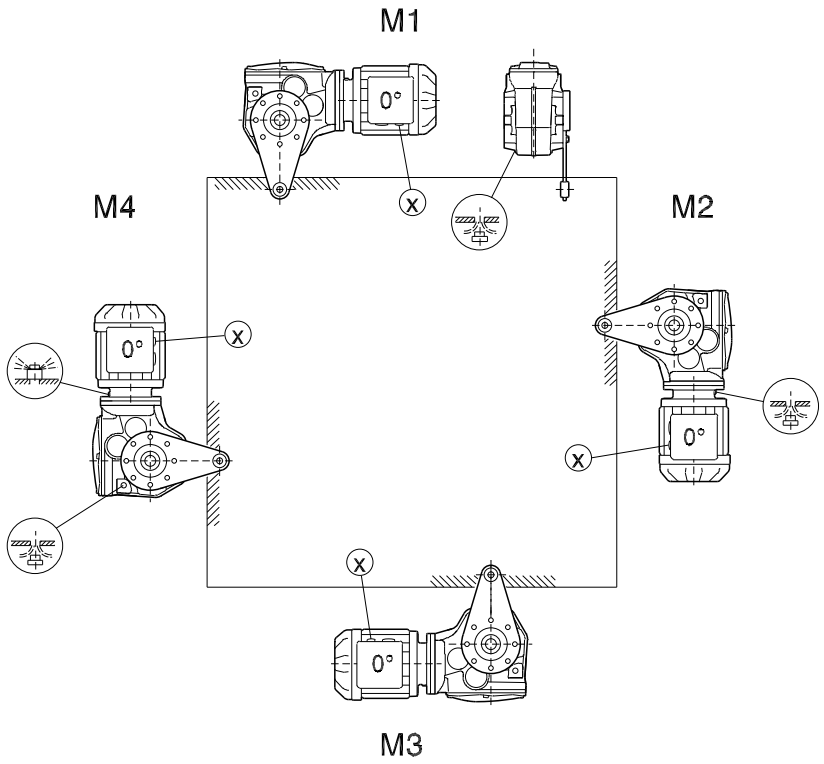

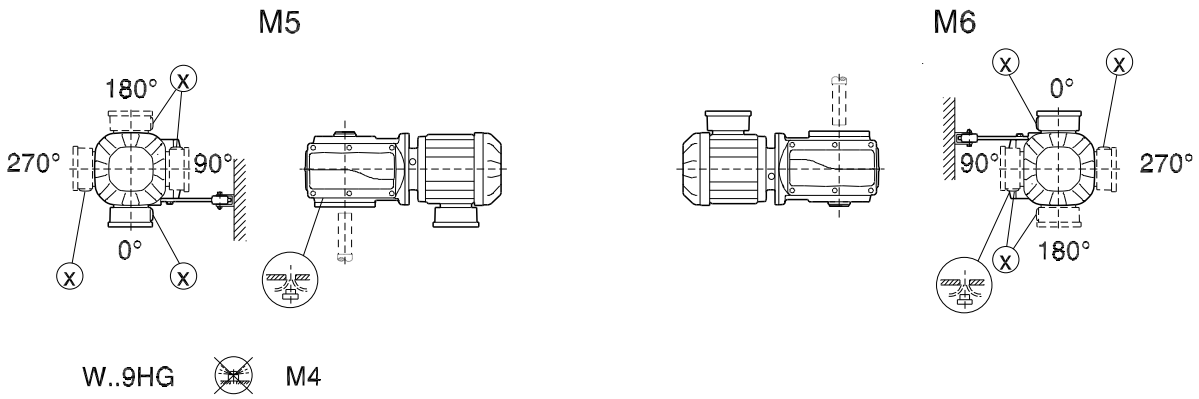

W..9HG M4

4 Selection tables and dimension sheets

4.1 Important information on selection tables and dimension drawings

4.1.1 Possible geometrical combinations

Structure of the combination tables

These tables show which combinations of gear units and single-speed AC (brake)motors are geometrically possible. For pole-changing AC (brake)motors, contact **SEW-EURODRIVE**.

The output speed n_a, the maximum output torque M_{amax}, the permitted overhung load F_{Ra} at maximum output torque (valid for foot-mounted gear units with solid shaft), the torsion angle $\varphi_{(/R)}$, and the gear unit ratio are specified for input speed n_e = 1400 min^{-1} for each combination.

Only if a value is specified for the torsion angle $\varphi_{(/R)}$, is the gear unit with this gear unit ratio available with "reduced backlash (/R)" option. The numerical value specifies the rotational clearance of the reduced backlash version in angular minutes ' (tolerance: ± 2 angular minutes).

R97, n_e = 1400 min^{-1}

n_a min^{-1}	M_{amax} Nm	F_{Ra} N	$\varphi_{(/R)}$	i	DRN 71M 71MS 80MK 80MS	DRN 80M 90S	DRN 90L 90SE	DRN 100L 100LM 100LS	DRN 112M	DRN 132M 132ME 132S	DRN 132L 160L 160M 160ME	DRN 160LP 180L 180M	DRN 180LP 200L 200ME 225S
													3000 Nm
					[1] ——					2			
43	2560	10500	5	32.05	✓	✓	✓	✓	✓	✓			
51	2560	8370	5	27.19	✓	✓	✓	✓	✓	✓			
[2]	[3]	[4]	[5]	[6]					[7]				

[1]	Stages of the gear ratios (1-, 2-, or 3-stage or, for compound gear units, 2-2-, 3-3-, 2-3-, or 3-2-stage). ▪ Helical gear units (R) – with the exception of single-stage RX gear units – and parallel-shaft helical gear units (F) as well as SPIROPLAN® W..9 gear units are 2- or 3-stage gear units depending on the gear unit ratio. ▪ For compound gear units, the stages of the primary gear unit (= small gear unit) are indicated on the right, the stages of the output end gear unit (= large gear unit) are indicated on the left. The primary gear unit of the compound gear unit is always a helical gear unit.
[2]	Output speed of the gear unit
[3]	Maximum output torque of the gear unit
[4]	Permitted overhung load at maximum output torque M_{amax} ▪ The value refers to the foot-mounted gear unit design with solid shaft.
[5]	▪ No specification (-): The reduced backlash (/R) option is not possible for this i. ▪ Specification of a numerical value: Reduced backlash option is possible. The numerical value specifies the rotational clearance of the reduced backlash version in angular minutes with a tolerance of ± 2 angular minutes.
[6]	Gear unit ratio

	▪ A value marked with * indicates a finite gear unit ratio.
[7]	▪ No data: Combination with the motor in the header is not possible ▪ ✓ = Combination with the motor in the header is possible

The following gear units have stages that depend on the gear unit ratio:

– R.. helical gear units: 2- or 3-stage

– F.. parallel-shaft helical gear units: 2- or 3-stage

– W..9 SPIROPLAN® right-angle gear units: 2- or 3-stage

The following gear units have a defined stage:

– RX.. helical gear units: 1-stage

– K7.. helical-bevel gear units: 3-stage

– S.. helical-worm gear units: 2-stage

– W..0 SPIROPLAN® right-angle gear units 1-stage

– W..7 SPIROPLAN® right-angle gear units 2-stage

4.1.2 Selection tables for gearmotors

Structure of the selection tables

The following two figures show the structure of the selection tables for gearmotors.

There are two types of selection tables:

1. For standard output speeds, sorted by the rated power P_m of the driving motor in kW.
2. For extremely low output speeds (always compound gearmotors), sorted by the maximum permitted output torque M_{a_max} in Nm.

For drives for extremely low output speeds (compound gearmotors), the motor power must be limited according to the maximum permitted output torque of the gear unit.

Table for normal output speeds:

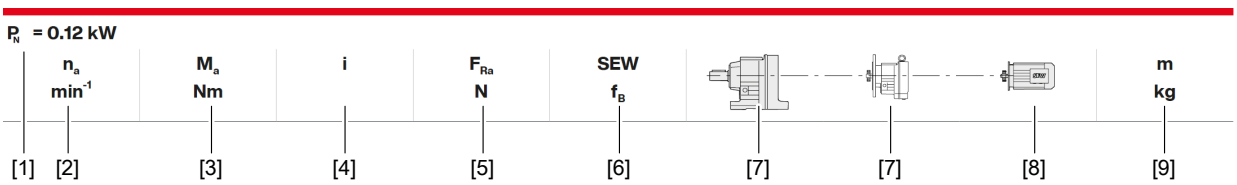

[1]	Rated power of driving motor
[2]	Output speed
[3]	Output torque
[4]	Gear unit ratio ▪ A value marked with * indicates a finite gear unit ratio.
[5]	Permitted overhung load on output side at M_a

	▪ Overhung load for foot-mounted gear units with solid shaft; overhung loads for other design types on request
[6]	Service factor
[7]	Gear unit type (example figure)
[8]	Motor type (example figure)
[9]	Mass

Table for extremely low output speeds (compound gearmotors):

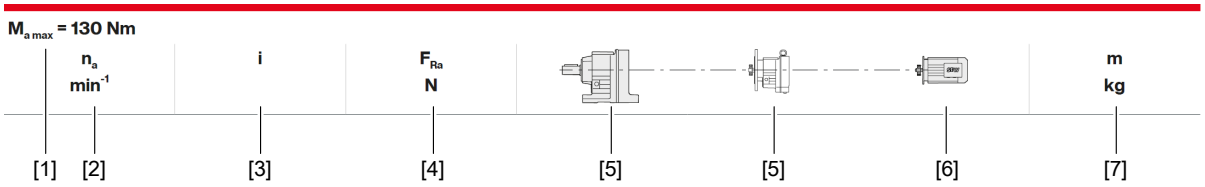

[1]	Maximum permitted output torque
[2]	Output speed
[3]	Gear unit ratio ▪ A value marked with * indicates a finite gear unit ratio.
[4]	Permitted overhung load on output side at M_a ▪ Overhung load for foot-mounted gear units with solid shaft; overhung loads for other design types on request
[5]	Gear unit type (example figure)
[6]	Motor type (example figure)
[7]	Mass

4.1.3 Symbols for scope of delivery

The scope of delivery is indicated in the dimension sheets using the following shapes:

	Standard parts supplied by SEW-EURODRIVE.
	Standard parts not supplied by SEW-EURODRIVE.

4.1.4 Tolerances

Shaft heights

The following tolerances apply to the specified dimensions:

- h ≤ 250 mm → -0.5 mm
- h > 250 mm → -1 mm

Foot-mounted gear unit: The mounted motor could protrude under the mounting surface, check.

Shaft ends

Diameter tolerance:

- Ø ≤ 50 mm → ISO k6
- Ø > 50 mm → ISO m6

Center holes according to DIN 332, shape DR:

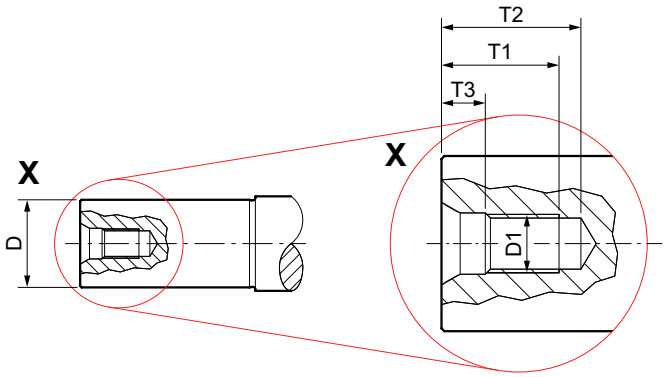

D	D1	T1 +2/0	T2 min	T3 +1/0
13 < D ≤ 16	M5	12.5	17	4
16 < D ≤ 21	M6	16	21	5
21 < D ≤ 24	M8	19	25	6
24 < D ≤ 30	M10	22	30	7.5
30 < D ≤ 38	M12	28	37	9.5
38 < D ≤ 50	M16	36	45	12
50 < D ≤ 85	M20	42	53	15
85 < D ≤ 130	M24	50	63	18
130 < D ≤ 225	M30	63	85	20

Keys: according to DIN 6885 (domed type)

Keyway width to ISO N9

Hollow shafts

Diameter tolerance:

Ø → ISO H7 measured with plug gauge

Keys: according to DIN 6885 (domed type)

Exception: Key for WA.37 with shaft Ø 25 mm and for KA.29 with shaft Ø 30 mm according to DIN 6885-3 (low form)

Keyway width to ISO JS9

Multiple-spline shafts

D_m Measuring roller diameter

M_e Check size

The fit of the hollow shafts with splined hollow shaft is 9H.

The assumed fit of the customer shaft in the dimension sheets of the catalog is 7d.

The fit pair 9H/7d specified in the dimension sheets is a clearance fit. Depending on the application requirements, it is the customer's responsibility to choose another fit pair and to manufacture the customer shaft accordingly.

Flanges

Centering shoulder tolerance:

Ø	≤ 230 mm (flange sizes A120 – A300)	→ ISO j6
Ø	> 230 mm (flange sizes A350 – A660)	→ ISO h6

For helical gear units, SPIROPLAN® right-angle gear units, AC (brake) motors and explosion-protected AC (brake) motors, up to 3 different flange dimensions are available per size. The mountable flange for each size can be found in the respective dimension sheets.

4.1.5 Eyebolts, lifting eyes

The following gear units and motors are delivered without a special transportation fixture:

- R..07 – R..27
- K..167 – K..187
- W..10 – W..30
- Motors ≤ DR..90

All other gear units and motors are equipped with cast-on lifting eyes, screw-on lifting eyes, or screw-on lifting eyebolts.

Gear unit/motor type	Removable		Cast-on
	eyebolts	lifting eyes	lifting eyes
R..37 – R..57	—	✓	—
R..67 – R..167	✓	—	—
RX57/RX67	—	✓	—

Gear unit/motor type	Removable		Cast-on
	eyebolts	lifting eyes	lifting eyes
RX77 – RX107	✓	—	—
F..27 – F..157	—	—	✓
K..19 – K..49	—	✓	—
K..37 – K..157	—	—	✓
S..37/S47	—	✓	—
S..47 – S..97	—	—	✓
W..19 – W..59	—	✓	—
≥ (E)DRN100LS	✓	—	—

✓ = present, — = not present

4.1.6 Breather valves

The gear unit dimension drawings are always shown with screw plugs. Depending on the mounting position ordered (M1 to M6), the corresponding screw plug is replaced with an activated breather valve at the factory. As a result, the contour dimensions can change slightly.

4.1.7 Shrink disk connection

To non-positively transfer the torques specified in the catalog in hollow-shaft gear units with a shrink-disk connection, observe the following boundary conditions in addition to the information given in the respective dimension sheet when designing the customer shaft:

- Surface roughness $R_z \leq 16$ µm
- Elastic limit of the customer shaft material R_e and/or $Rp_{0.2} \geq 305$ N/mm^2
- Design of the customer shaft as solid shaft

If the customer shaft is designed as a hollow shaft, contact SEW-EURODRIVE.

4.1.8 Splined hollow shaft

FV.. hollow shaft gear unit sizes 27 to 107, and KV.. sizes 37 to 107 are supplied with splining according to standard DIN 5480.

4.1.9 Rubber buffer for FA/FH/FV/FT

The depictions on the dimension sheets show the rubber buffers for FA/FH/FV/FT gear units in loose state. The rubber buffers must be preloaded by the specified value ΔL, respectively. The spring characteristic curve of the rubber buffers is available from SEW-EURODRIVE on request.

4.1.10 Position of the torque arm

The following figure shows the possible positions of the torque arm with the corresponding angle specifications for the helical-worm gear units, K..9 helical-bevel gear units, and SPIROPLAN® right-angle gear units.

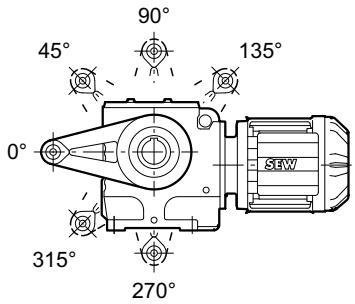

The gear units in the following table have exceptions for the position of the torque arm:

Gear unit	Impossible position
W..29, W..39	90°
W..10 – W..30 W..19 – W..49 K..9	135°

For more information about torque arms, refer to the respective dimension sheets of the gearmotors.

Gearmotor	Dimension sheets
Helical-bevel gearmotors	Dimension sheets K..DRN.. (▸ 669)
Helical-worm gearmotors	Dimension sheets S..DRN.. (▸ 862)
SPIROPLAN® right-angle gearmotors	Dimension sheets W..DRN.. (▸ 999)

4.1.11 Gearmotor dimension drawings

The dimension designations of the gearmotors are described below:

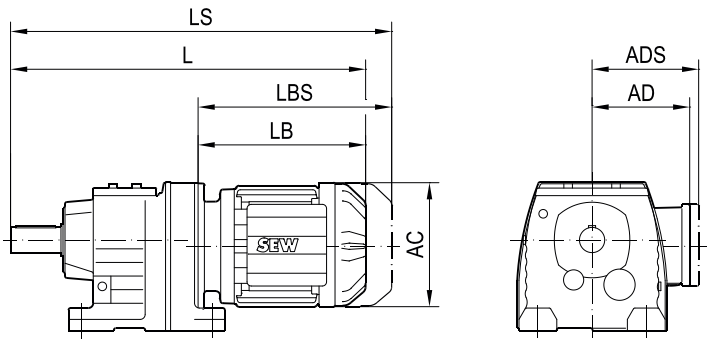

L	Total length of gearmotor
LB	Length of motor
LBS	Length of brakemotor
LS	Total length of gearmotor including brake
AC	Square dimension of the motor
AD	Center of motor shaft to top edge of terminal box
ADS	Center of brakemotor shaft to top edge of terminal box

The motor dimensions may change when installing motor options. Refer to the dimension drawings of the motor options in the "AC Motors" catalog.

Note that the terminal box dimensions of special designs may differ from the standard.

4.2 R..DRN.. helical gearmotors

4.2.1 Geometrically possible combinations R..DRN..

RX57, n_e = 1400 min^{-1} — **69 Nm**

n_a min^{-1}	M_{amax} Nm	F_{Ra} N	$\varphi_{(/R)}$	i	DRN 63M 63MS 71M 71MS 80MK 80MS	DRN 80M 90S	DRN 90L	DRN 100L 100LM 100LS	DRN 112M	DRN 132M 132S
						1				
254	39	3100	-	5.50*	✓					
276	36	3030	-	5.07	✓					
321	68	2640	-	4.35	✓	✓				
369	69	2480	-	3.79	✓	✓	✓			
394	69	2420	-	3.55*	✓	✓	✓			
445	65	2320	-	3.14	✓	✓	✓	✓		
481	67	2170	-	2.91	✓	✓	✓			
530	69	1810	-	2.64*	✓	✓	✓	✓	✓	
590	69	1500	-	2.37	✓	✓	✓	✓	✓	
686	69	1070	-	2.04	✓	✓	✓	✓	✓	✓
729	69	890	-	1.92*	✓	✓	✓	✓	✓	✓
848	69	430	-	1.65	✓	✓	✓	✓	✓	✓
945	68	112	-	1.48	✓	✓	✓	✓	✓	✓
1075	63	132	-	1.30	✓	✓	✓	✓	✓	✓

RX67, n_e = 1400 min^{-1} — **134 Nm**

n_a min^{-1}	M_{amax} Nm	F_{Ra} N	$\varphi_{(/R)}$	i	DRN 63M 63MS 71M 71MS 80MK 80MS	DRN 80M 90S	DRN 90L	DRN 100L 100LM 100LS	DRN 112M	DRN 132M 132S
						1				
230	43	4010	-	6.07	✓					
270	75	3580	-	5.18	✓	✓				
309	82	3350	-	4.53	✓	✓	✓			
325	80	3300	-	4.30*	✓	✓	✓			
371	87	3090	-	3.77	✓	✓	✓	✓		
437	100	2800	-	3.20*	✓	✓	✓	✓	✓	
484	106	2640	-	2.89	✓	✓	✓	✓	✓	
551	118	2000	-	2.54	✓	✓	✓	✓	✓	✓
583	123	1530	-	2.40*	✓	✓	✓	✓	✓	✓
686	134	230	-	2.04	✓	✓	✓	✓	✓	✓
752	126	225	-	1.86	✓	✓	✓	✓	✓	✓
869	114	245	-	1.61	✓	✓	✓	✓	✓	✓
1000	104	205	-	1.40*		✓	✓	✓	✓	✓

RX77, n_e = 1400 min^{-1} — **215 Nm**

n_a min^{-1}	M_{amax} Nm	F_{Ra} N	$\varphi_{(/R)}$	i	DRN 63M 63MS 71M 71MS 80MK 80MS	DRN 80M 90S	DRN 90L	DRN 100L 100LM 100LS	DRN 112M	DRN 132M 132S	DRN 132L 160L 160M
						1					
175	57	6330	-	8.00*	✓						
187	53	6200	-	7.47	✓						
218	103	5600	-	6.41	✓	✓					
248	110	5300	-	5.63	✓	✓	✓				
261	103	5240	-	5.35*	✓	✓	✓				
295	123	4890	-	4.73	✓	✓	✓	✓			
346	143	4490	-	4.04*	✓	✓	✓	✓	✓		
378	153	4280	-	3.70	✓	✓	✓	✓	✓		
430	182	3140	-	3.25*	✓	✓	✓	✓	✓	✓	
454	193	2490	-	3.08*	✓	✓	✓	✓	✓	✓	
518	215	1030	-	2.70	✓	✓	✓	✓	✓	✓	
576	215	425	-	2.43	✓	✓	✓	✓	✓	✓	✓
657	200	360	-	2.13	✓	✓	✓	✓	✓	✓	✓
744	187	255	-	1.88*		✓	✓	✓	✓	✓	✓
838	173	240	-	1.67		✓	✓	✓	✓	✓	✓
985	155	240	-	1.42		✓	✓	✓	✓	✓	✓

RX87, n_e = 1400 min^{-1} — **405 Nm**

n_a min^{-1}	M_{amax} Nm	F_{Ra} N	$\varphi_{(/R)}$	i	DRN 71M 80MK 80MS	DRN 80M 90S	DRN 90L	DRN 100L 100LM 100LS	DRN 112M	DRN 132M 132S	DRN 132L 160L 160M	DRN 180L 180M	DRN 200L
							1						
161	139	7890	-	8.65	✓	✓							
183	149	7500	-	7.63	✓	✓	✓						
194	140	7380	-	7.20*	✓	✓	✓						
217	192	6860	-	6.45	✓	✓	✓	✓					
251	225	6330	-	5.56*	✓	✓	✓	✓	✓				
276	250	5990	-	5.07	✓	✓	✓	✓	✓				
311	290	5520	-	4.50*	✓	✓	✓	✓	✓	✓			
370	305	5050	-	3.78	✓	✓	✓	✓	✓	✓			
402	405	2810	-	3.48	✓	✓	✓	✓	✓	✓	✓		
453	405	2030	-	3.09	✓	✓	✓	✓	✓	✓	✓		
507	405	1200	-	2.76*		✓	✓	✓	✓	✓	✓	✓	
564	405	470	-	2.48		✓	✓	✓	✓	✓	✓	✓	
651	385	42	-	2.15		✓	✓	✓	✓	✓	✓	✓	✓
725	355	185	-	1.93				✓	✓	✓	✓	✓	✓
875	315	74	-	1.60*				✓	✓	✓	✓	✓	✓
1005	290	74	-	1.39						✓	✓	✓	✓

RX97, n_e = 1400 min^{-1} — **595 Nm**

n_a min^{-1}	M_{amax} Nm	F_{Ra} N	$\varphi_{(/R)}$	i	DRN 71M 71MS 80MK 80MS	DRN 80M 90S	DRN 90L	DRN 100L 100LM 100LS	DRN 112M	DRN 132M 132S	DRN 132L 160L 160M	DRN 180L 180M	DRN 200L 225S
							1						
170	225	9570	-	8.23	✓	✓	✓	✓					

RX97, n_e = 1400 min^{-1} — **595 Nm**

n_a min^{-1}	M_{amax} Nm	F_{Ra} N	$\varphi_{(/R)}$	i	DRN 71M 71MS 80MK 80MS	DRN 80M 90S	DRN 90L	DRN 100L 100LM 100LS	DRN 112M	DRN 132M 132S	DRN 132L 160L 160M	DRN 180L 180M	DRN 200L 225S
195	260	8960	-	7.16*	✓	✓	✓	✓	✓				
213	300	8510	-	6.56	✓	✓	✓	✓	✓				
241	420	7650	-	5.79	✓	✓	✓	✓	✓	✓			
285	395	7240	-	4.91	✓	✓	✓	✓	✓	✓			
309	595	6210	-	4.52	✓	✓	✓	✓	✓	✓	✓		
346	595	5450	-	4.04	✓	✓	✓	✓	✓	✓	✓		
384	595	4610	-	3.64*		✓	✓	✓	✓	✓	✓	✓	
424	595	3820	-	3.30		✓	✓	✓	✓	✓	✓	✓	
479	595	2890	-	2.92		✓	✓	✓	✓	✓	✓	✓	✓
530	595	2020	-	2.64				✓	✓	✓	✓	✓	✓
625	595	545	-	2.24*				✓	✓	✓	✓	✓	✓
714	570	19	-	1.96						✓	✓	✓	✓
853	505	51	-	1.64						✓	✓	✓	✓
985	455	132	-	1.42						✓	✓	✓	✓

RX107, n_e = 1400 min^{-1} — **830 Nm**

n_a min^{-1}	M_{amax} Nm	F_{Ra} N	$\varphi_{(/R)}$	i	DRN 100L 100LM 100LS	DRN 112M	DRN 132M 132S	DRN 132L 160L 160M	DRN 180L 180M	DRN 200L 225M 225S
					 1					
211	460	9660	-	6.63*	✓	✓	✓			
249	455	9040	-	5.61	✓	✓	✓			
269	695	7780	-	5.19	✓	✓	✓	✓		
301	695	7380	-	4.65	✓	✓	✓	✓		
333	830	6140	-	4.20*	✓	✓	✓	✓	✓	
367	830	5260	-	3.81	✓	✓	✓	✓	✓	
414	830	4190	-	3.38	✓	✓	✓	✓	✓	✓
456	830	3300	-	3.07	✓	✓	✓	✓	✓	✓
530	830	1850	-	2.64*	✓	✓	✓	✓	✓	✓
608	830	760	-	2.30			✓	✓	✓	✓
717	765	420	-	1.95			✓	✓	✓	✓
818	705	345	-	1.71			✓	✓	✓	✓
972	645	315	-	1.44				✓	✓	✓

R07, n_e = 1400 min^{-1} — **50 Nm**

n_a min^{-1}	M_{amax} Nm	F_{Ra} N	$\varphi_{(/R)}$	i	DRN 63M 63MS 71M 71MS 80MK 80MS	DRN 80M
					 3	
17	50	1510	-	78.24	✓	
19	50	1510	-	71.47	✓	
23	50	1510	-	60.32	✓	✓
27	50	1510	-	51.52	✓	✓
29	50	1470	-	47.78	✓	✓
31	50	1420	-	44.16	✓	
33	50	1380	-	41.31	✓	✓

R07, n_e = 1400 min^{-1} — **50 Nm**

n_a min^{-1}	M_{amax} Nm	F_{Ra} N	$\varphi_{(/R)}$	i	DRN 63M 63MS 71M 71MS 80MK 80MS	DRN 80M
34	50	1370	-	40.34	✓	
36	50	1340	-	38.51	✓	✓
41	50	1270	-	34.05	✓	✓
48	50	1190	-	29.08	✓	✓
51	50	1150	-	26.97	✓	✓
60	50	1080	-	23.32	✓	✓
64	50	1040	-	21.73	✓	✓
					 2	
76	50	970	-	18.31	✓	
83	50	930	-	16.73	✓	
99	50	850	-	14.12	✓	✓
116	50	790	-	12.06	✓	✓
125	50	760	-	11.18	✓	✓
144	50	710	-	9.67	✓	✓
155	50	685	-	9.01	✓	✓
178	49	645	-	7.85	✓	✓
187	43	595	-	7.48	✓	
204	43	535	-	6.83	✓	
243	40	530	-	5.76	✓	✓
284	37	530	-	4.92	✓	✓
306	36	520	-	4.57	✓	✓
354	34	505	-	3.95	✓	✓
380	33	500	-	3.68	✓	✓
436	31	495	-	3.21	✓	✓

R17, n_e = 1400 min^{-1} — **85 Nm**

n_a min^{-1}	M_{amax} Nm	F_{Ra} N	$\varphi_{(/R)}$	i	DRN 63M 63MS 71M 71MS 80MK 80MS	DRN 80M
					 3	
17	85	1770	-	81.64	✓	✓
19	85	1770	-	70.39	✓	✓
21	85	1770	-	65.61	✓	✓
24	85	1770	-	57.35	✓	✓
26	85	1770	-	53.76	✓	✓
29	85	1770	-	47.44	✓	✓
31	85	1770	-	44.18	✓	✓
36	85	1770	-	38.61	✓	✓
38	85	1770	-	36.20	✓	✓
43	85	1770	-	31.94	✓	✓
49	85	1770	-	28.32	✓	✓
58	85	1650	-	24.07	✓	✓
					 2	
55	85	1690	-	25.23	✓	

R17, n_e = 1400 min^{-1} — **85 Nm**

n_a min^{-1}	M_{amax} Nm	F_{Ra} N	$\varphi_{(/R)}$	i	DRN 63M 63MS 71M 71MS 80MK 80MS	DRN 80M
60	85	1620	-	23.15	✓	
71	85	1500	-	19.71	✓	✓
82	85	1400	-	16.99	✓	✓
88	85	1350	-	15.84	✓	✓
101	85	1270	-	13.84	✓	✓
107	85	1230	-	12.98	✓	✓
122	81	1180	-	11.45	✓	✓
137	77	1140	-	10.15	✓	✓
162	72	1090	-	8.63	✓	✓
185	56	1040	-	7.55	✓	✓
198	55	1010	-	7.04	✓	✓
227	54	950	-	6.15	✓	✓
243	53	930	-	5.76	✓	✓
275	51	890	-	5.09	✓	✓
310	48	870	-	4.51	✓	✓
365	45	830	-	3.83	✓	✓

R27, n_e = 1400 min^{-1} — **130 Nm**

n_a min^{-1}	M_{amax} Nm	F_{Ra} N	$\varphi_{(/R)}$	i	DRN 63M 63MS 71M 71MS 80MK 80MS	DRN 80M 90S	DRN 90L	DRN 100L 100LM 100LS
					 3			
10	130	4230	-	135.09	✓			
11	130	4230	-	123.91	✓			
13	130	4230	-	105.49	✓	✓		
15	130	4230	-	90.96	✓	✓	✓	
16	130	4230	-	84.78	✓	✓	✓	
18	130	4230	-	74.11	✓	✓	✓	✓
20	130	4180	-	69.47	✓	✓	✓	
22	130	3980	-	61.30	✓	✓	✓	✓
25	130	3840	-	55.87	✓	✓		
29	130	3630	-	48.17	✓	✓	✓	
31	130	3530	-	44.90	✓	✓	✓	
35	130	3350	-	39.25	✓	✓	✓	✓
38	130	3260	-	36.79	✓	✓	✓	
43	130	3100	-	32.47	✓	✓	✓	✓
48	130	2950	-	28.78	✓	✓	✓	✓
57	130	2770	-	24.47	✓	✓	✓	✓
					 2			
49	130	2940	-	28.37	✓			
53	130	2840	-	26.09	✓			
62	130	2660	-	22.32	✓	✓		
72	130	2510	-	19.35	✓	✓	✓	
77	130	2440	-	18.08	✓	✓	✓	
89	130	2290	-	15.63	✓	✓	✓	✓

R27, n_e = 1400 min^{-1} — **130 Nm**

n_a min^{-1}	M_{amax} Nm	F_{Ra} N	$\varphi_{(/R)}$	i	DRN 63M 63MS 71M 71MS 80MK 80MS	DRN 80M 90S	DRN 90L	DRN 100L 100LM 100LS
105	130	2140	-	13.28*	✓	✓	✓	✓
118	129	1990	-	11.86	✓	✓	✓	✓
138	122	1890	-	10.13	✓	✓	✓	✓
148	122	900	-	9.41	✓	✓		
171	116	870	-	8.16	✓	✓	✓	
183	112	900	-	7.63*	✓	✓	✓	
212	106	880	-	6.59	✓	✓	✓	✓
250	99	880	-	5.60*	✓	✓	✓	✓
280	95	860	-	5.00*	✓	✓	✓	✓
327	87	920	-	4.27	✓	✓	✓	✓
350	85	910	-	4.00*	✓	✓	✓	✓
415	79	900	-	3.37	✓	✓	✓	✓

R27R17, n_e = 1400 min^{-1} — **130 Nm**

n_a min^{-1}	M_{amax} Nm	F_{Ra} N	$\varphi_{(/R)}$	i	DRN 63M 63MS 71M 71MS 80MK 80MS	DRN 80M
					3 3	
0.16	130	4230	-	8612	✓	✓
0.18	130	4230	-	7425	✓	✓
0.2	130	4230	-	6921	✓	✓
0.23	130	4230	-	6050	✓	✓
0.26	130	4230	-	5217	✓	✓
0.3	130	4230	-	4661	✓	✓
0.34	130	4230	-	4073	✓	✓
0.39	130	4230	-	3516	✓	✓
0.44	130	4230	-	3160	✓	✓
0.5	130	4230	-	2763	✓	✓
0.57	130	4230	-	2414	✓	✓
0.66	130	4230	-	2110	✓	✓
0.75	130	4230	-	1862	✓	✓
0.86	130	4230	-	1625	✓	✓
0.97	130	4230	-	1434	✓	✓
1.1	130	4230	-	1254	✓	✓
					2 3	
0.76	130	4230	-	1822	✓	✓
0.88	130	4230	-	1580	✓	✓
0.95	130	4230	-	1464	✓	✓
1.1	130	4230	-	1270	✓	✓
1.2	130	4230	-	1100	✓	✓
1.4	130	4230	-	972	✓	✓
1.6	130	4230	-	840	✓	✓
1.8	130	4230	-	741	✓	✓
2.1	130	4230	-	654	✓	✓
2.4	130	4230	-	566	✓	✓

R27R17, n_e = 1400 min^{-1} — **130 Nm**

n_a min^{-1}	M_{amax} Nm	F_{Ra} N	$\varphi_{(/R)}$	i	DRN 63M 63MS 71M 71MS 80MK 80MS	DRN 80M
2.8	130	4230	-	499	✓	✓
					3 2	
1.2	130	4230	-	1101	✓	✓
1.4	130	4230	-	962	✓	✓
1.6	130	4230	-	848	✓	✓
1.8	130	4230	-	743	✓	✓
2.1	130	4230	-	649	✓	✓
2.4	130	4230	-	567	✓	✓
2.7	130	4230	-	509	✓	✓
3.2	130	4230	-	432	✓	✓
3.6	130	4230	-	387	✓	✓
4.1	130	4230	-	339	✓	✓
4.7	130	4230	-	296	✓	✓
5.4	130	4230	-	259	✓	✓
6.1	130	4230	-	229	✓	✓
7	130	4230	-	200	✓	✓
7.9	130	4230	-	177	✓	✓
8.4	130	4230	-	166	✓	✓
9.3	130	4230	-	150	✓	✓
9.9	130	4230	-	141	✓	✓
11	130	4230	-	124	✓	✓
12	130	4230	-	110	✓	✓
14	130	4230	-	94	✓	✓
					2 2	
3.1	130	4230	-	440	✓	✓
3.6	130	4230	-	381	✓	✓
4.2	130	4230	-	329	✓	✓
4.8	130	4230	-	290	✓	✓
5.4	130	4230	-	256	✓	✓
6.1	130	4230	-	227	✓	✓
6.8	130	4230	-	203	✓	✓
7.8	130	4230	-	179	✓	✓
8.9	130	4230	-	156	✓	✓
10	130	4230	-	135	✓	✓
11	130	4230	-	118	✓	✓
13	130	4230	-	104	✓	✓
15	130	4230	-	90	✓	✓

R37, n_e = 1400 min^{-1} — **200 Nm**

n_a min^{-1}	M_{amax} Nm	F_{Ra} N	$\varphi_{(/R)}$	i	DRN 63M 63MS 71M 71MS 80MK 80MS	DRN 80M 90S	DRN 90L	DRN 100L 100LM 100LS
					3			
10	200	4950	8	134.82	✓			

R37, n_e = 1400 min^{-1} — **200 Nm**

n_a min^{-1}	M_{amax} Nm	F_{Ra} N	$\varphi_{(/R)}$	i	DRN 63M 63MS 71M 71MS 80MK 80MS	DRN 80M 90S	DRN 90L	DRN 100L 100LM 100LS
11	200	4950	8	123.66	✓			
13	200	4950	8	105.28	✓	✓		
15	200	4950	8	90.77	✓	✓	✓	
16	200	4950	8	84.61	✓	✓	✓	
18	200	4950	8	73.96	✓	✓	✓	✓
20	200	4950	8	69.33	✓	✓	✓	
22	200	4950	8	61.18	✓	✓	✓	✓
25	200	4950	9	55.76	✓	✓		
29	200	4950	9	48.08	✓	✓	✓	
31	200	4950	9	44.81	✓	✓	✓	
35	200	4760	9	39.17	✓	✓	✓	✓
38	200	4540	9	36.72	✓	✓	✓	
43	200	4120	9	32.40	✓	✓	✓	✓
48	200	3740	9	28.73	✓	✓	✓	✓
57	200	3240	9	24.42	✓	✓	✓	✓
					 2			
49	200	3690	7	28.32	✓			
53	185	3860	7	26.03	✓			
62	200	2970	7	22.27	✓	✓		
72	200	2570	7	19.31	✓	✓	✓	
77	200	2390	8	18.05	✓	✓	✓	
89	200	2010	8	15.60	✓	✓	✓	✓
105	190	1880	8	13.25	✓	✓	✓	✓
118	183	1810	8	11.83	✓	✓	✓	✓
138	170	1820	8	10.11	✓	✓	✓	✓
147	167	1760	8	9.47	✓	✓	✓	✓
175	156	1720	8	7.97	✓	✓	✓	✓
209	144	1000	12	6.67	✓	✓	✓	✓
246	142	760	12	5.67	✓	✓	✓	✓
276	135	790	13	5.06	✓	✓	✓	✓
324	126	820	13	4.32	✓	✓	✓	✓
345	122	850	13	4.05	✓	✓	✓	✓
410	112	900	14	3.41	✓	✓	✓	✓

R37R17, n_e = 1400 min^{-1} — **200 Nm**

n_a min^{-1}	M_{amax} Nm	F_{Ra} N	$\varphi_{(/R)}$	i	DRN 63M 63MS 71M 71MS 80MK 80MS	DRN 80M
					 3  3	
0.16	200	4950	8	8595	✓	✓
0.18	200	4950	8	7411	✓	✓
0.2	200	4950	8	6907	✓	✓
0.23	200	4950	8	6038	✓	✓
0.26	200	4950	8	5206	✓	✓
0.3	200	4950	8	4651	✓	✓

R37R17, n_e = 1400 min^{-1} **200 Nm**

n_a min^{-1}	M_{amax} Nm	F_{Ra} N	$\varphi_{(/R)}$	i	DRN 63M 63MS 71M 71MS 80MK 80MS	DRN 80M
0.34	200	4950	8	4065	✓	✓
0.38	200	4950	9	3658	✓	✓
0.44	200	4950	9	3154	✓	✓
0.5	200	4950	9	2757	✓	✓
0.58	200	4950	9	2409	✓	✓
0.66	200	4950	9	2106	✓	✓
0.75	200	4950	9	1856	✓	✓
0.86	200	4950	9	1622	✓	✓
0.97	200	4950	9	1431	✓	✓
1.1	200	4950	10	1251	✓	✓
					2 3	
0.77	200	4950	9	1818	✓	✓
0.88	200	4950	9	1576	✓	✓
1	200	4950	9	1359	✓	✓
1.1	200	4950	9	1267	✓	✓
1.2	200	4950	9	1098	✓	✓
1.4	200	4950	9	970	✓	✓
1.6	200	4950	9	839	✓	✓
1.8	200	4950	9	740	✓	✓
2.1	200	4950	9	653	✓	✓
2.4	200	4950	9	577	✓	✓
2.8	200	4950	9	498	✓	✓
					3 2	
1.2	200	4950	9	1099	✓	✓
1.4	200	4950	8	960	✓	✓
1.6	200	4950	8	847	✓	✓
1.8	200	4950	8	741	✓	✓
2.1	200	4950	8	647	✓	✓
2.4	200	4950	9	566	✓	✓
2.7	200	4950	9	508	✓	✓
3.2	200	4950	9	431	✓	✓
3.6	200	4950	9	387	✓	✓
4.1	200	4950	10	338	✓	✓
4.7	200	4950	10	296	✓	✓
5.4	200	4950	10	259	✓	✓
6.1	200	4950	10	228	✓	✓
7	200	4950	10	199	✓	✓
8.1	200	4950	10	172	✓	✓
9.3	200	4950	10	150	✓	✓
10	200	4950	10	130	✓	✓
11	200	4950	10	124	✓	✓
12	200	4950	10	110	✓	✓
14	200	4950	10	94	✓	✓
					2 2	
3.1	200	4950	9	439	✓	✓
3.7	200	4950	9	378	✓	✓
4.2	200	4950	9	328	✓	✓
4.8	200	4950	9	289	✓	✓
5.2	200	4950	9	265	✓	✓

R37R17, n_e = 1400 min^{-1} — **200 Nm**

n_a min^{-1}	M_{amax} Nm	F_{Ra} N	$\varphi_{(/R)}$	i	DRN 63M 63MS 71M 71MS 80MK 80MS	DRN 80M
6.1	200	4950	9	226	✓	✓
6.9	200	4950	9	202	✓	✓
7.8	200	4950	9	179	✓	✓
8.9	200	4950	9	156	✓	✓
10	200	4950	9	135	✓	✓
11	200	4950	9	127	✓	✓
13	200	4950	9	104	✓	✓
15	200	4950	10	90	✓	✓

R47, n_e = 1400 min^{-1} — **300 Nm**

n_a min^{-1}	M_{amax} Nm	F_{Ra} N	$\varphi_{(/R)}$	i	DRN 63M 63MS 71M 71MS 80MK 80MS	DRN 80M 90S	DRN 90L	DRN 100L 100LM 100LS	DRN 112M	DRN 132S
					 3					
7.9	300	5420	7	176.88	✓					
8.5	300	5420	7	162.94	✓					
10	300	5420	7	139.99	✓	✓				
11	300	5420	7	121.87	✓	✓	✓			
12	300	5420	7	114.17	✓	✓	✓			
13	300	5420	7	100.86	✓	✓	✓			
14	300	5420	7	93.68	✓	✓	✓			
16	300	5420	7	84.90	✓	✓	✓			
18	300	5420	7	76.23	✓	✓	✓			
20	300	5420	8	68.54	✓	✓	✓			
21	300	5420	8	64.21	✓	✓	✓			
24	300	5420	8	56.73	✓	✓	✓	✓		
26	300	5350	8	52.69	✓	✓	✓			
29	300	5150	8	47.75	✓	✓	✓	✓		
32	300	4930	8	42.87	✓	✓	✓	✓		
37	300	4630	8	36.93	✓	✓	✓	✓		
40	300	4520	8	34.73	✓	✓	✓	✓		
46	300	4240	8	29.88	✓	✓	✓	✓		
52	300	4050	8	26.70	✓	✓	✓	✓		
59	300	3840	8	23.59	✓	✓	✓	✓		
					 2					
41	240	4690	7	33.79	✓					
44	220	4610	7	31.12	✓					
52	300	4050	7	26.74	✓	✓				
60	300	3820	7	23.28	✓	✓	✓			
64	300	3710	7	21.81	✓	✓	✓			
72	295	3530	7	19.27	✓	✓	✓	✓		
78	290	3390	7	17.89	✓	✓	✓			
86	275	3350	7	16.22	✓	✓	✓	✓	✓	
96	265	3230	7	14.56	✓	✓	✓	✓	✓	
111	250	3080	7	12.54	✓	✓	✓	✓	✓	✓

R47, n_e = 1400 min^{-1} — **300 Nm**

n_a min^{-1}	M_{amax} Nm	F_{Ra} N	$\varphi_{(/R)}$	i	DRN 63M 63MS 71M 71MS 80MK 80MS	DRN 80M 90S	DRN 90L	DRN 100L 100LM 100LS	DRN 112M	DRN 132S
118	245	3020	7	11.79	✓	✓	✓	✓	✓	✓
137	230	2890	7	10.15	✓	✓	✓	✓	✓	✓
154	220	2780	8	9.07	✓	✓	✓	✓	✓	✓
174	205	2690	8	8.01	✓	✓	✓	✓	✓	✓
180	163	2720	10	7.76*	✓	✓	✓	✓	✓	
201	159	2620	10	6.96	✓	✓	✓	✓	✓	
233	156	2470	10	6.00	✓	✓	✓	✓	✓	✓
248	155	2410	10	5.64*	✓	✓	✓	✓	✓	✓
288	150	2280	10	4.85	✓	✓	✓	✓	✓	✓
322	146	2190	11	4.34	✓	✓	✓	✓	✓	✓
365	144	2090	11	3.83	✓	✓	✓	✓	✓	✓

R47R37, n_e = 1400 min^{-1} — **300 Nm**

n_a min^{-1}	M_{amax} Nm	F_{Ra} N	$\varphi_{(/R)}$	i	DRN 63M 63MS 71M 71MS 80MK 80MS	DRN 80M 90S	DRN 90L	DRN 100L 100LM 100LS
					3 3			
0.1	300	5420	7	13598	✓			
0.11	300	5420	7	12472	✓			
0.13	300	5420	7	10619	✓	✓		
0.15	300	5420	7	9155	✓	✓	✓	
0.16	300	5420	7	8534	✓	✓	✓	
0.18	300	5420	7	7460	✓	✓	✓	✓
0.2	300	5420	7	6993	✓	✓	✓	
0.22	300	5420	7	6171	✓	✓	✓	✓
0.24	300	5420	7	5624	✓	✓		
0.28	300	5420	7	4849	✓	✓	✓	
0.3	300	5420	7	4520	✓	✓	✓	
0.35	300	5420	7	3951	✓	✓	✓	✓
0.37	300	5420	7	3704	✓	✓	✓	
0.42	300	5420	7	3268	✓	✓	✓	✓
0.48	300	5420	7	2898	✓	✓	✓	✓
0.56	300	5420	7	2463	✓	✓	✓	✓
					2 3			
0.53	300	5420	8	2598	✓			
0.58	300	5420	8	2383	✓			
0.68	300	5420	8	2029	✓	✓		
0.8	300	5420	8	1749	✓	✓	✓	
0.85	300	5420	8	1630	✓	✓	✓	
0.98	300	5420	8	1425	✓	✓	✓	✓
1	300	5420	8	1336	✓	✓	✓	
1.1	300	5420	8	1179	✓	✓	✓	✓
1.3	300	5420	8	1074	✓	✓		
1.5	300	5420	8	927	✓	✓	✓	
1.6	300	5420	8	863	✓	✓	✓	

R47R37, n_e = 1400 min^{-1} — **300 Nm**

n_a min^{-1}	M_{amax} Nm	F_{Ra} N	$\varphi_{(/R)}$	i	DRN 63M 63MS 71M 71MS 80MK 80MS	DRN 80M 90S	DRN 90L	DRN 100L 100LM 100LS
1.8	300	5420	8	755	✓	✓	✓	✓
1.9	300	5420	8	708	✓	✓	✓	
2.2	300	5420	8	624	✓	✓	✓	✓
2.5	300	5420	8	554	✓	✓	✓	✓
2.9	300	5420	8	471	✓	✓	✓	✓
					3	2		
0.49	300	5420	7	2856	✓			
0.53	300	5420	7	2625	✓			
0.62	300	5420	7	2246	✓	✓		
0.71	300	5420	7	1948	✓	✓	✓	
0.76	300	5420	7	1821	✓	✓	✓	
0.89	300	5420	7	1573	✓	✓	✓	✓
1.1	300	5420	7	1193	✓	✓	✓	✓
1.3	300	5420	7	1020	✓	✓	✓	✓
1.4	300	5420	7	955	✓	✓	✓	✓
1.7	300	5420	7	804	✓	✓	✓	✓
2	300	5420	7	673	✓	✓	✓	✓
2.4	300	5420	7	572	✓	✓	✓	✓
2.7	300	5420	7	510	✓	✓	✓	✓
3.2	300	5420	7	436	✓	✓	✓	✓
3.4	300	5420	7	408	✓	✓	✓	✓
4	300	5420	7	344	✓	✓	✓	✓
					2	2		
2.5	300	5420	8	546	✓			
2.7	300	5420	8	502	✓			
3.2	300	5420	8	429	✓	✓		
3.7	300	5420	8	372	✓	✓	✓	
4	300	5420	8	348	✓	✓	✓	
4.6	300	5420	8	301	✓	✓	✓	✓
5.4	300	5420	8	255	✓	✓	✓	✓
6.1	300	5420	8	228	✓	✓	✓	✓
7.1	300	5420	8	195	✓	✓	✓	✓
7.6	300	5420	8	182	✓	✓	✓	✓
9	300	5420	8	154	✓	✓	✓	✓
10	300	5420	8	129	✓	✓	✓	✓
12	300	5420	8	109	✓	✓	✓	✓
14	300	5420	8	98	✓	✓	✓	✓

R57, n_e = 1400 min^{-1} — **450 Nm**

n_a min^{-1}	M_{amax} Nm	F_{Ra} N	$\varphi_{(/R)}$	i	DRN 63M 63MS 71M 71MS 80MK 80MS	DRN 80M 90S	DRN 90L	DRN 100L 100LM 100LS	DRN 112M	DRN 132M 132S
					3					
7.4	450	7110	7	186.89	✓					

R57, n_e = 1400 min^{-1} — **450 Nm**

n_a min^{-1}	M_{amax} Nm	F_{Ra} N	$\varphi_{(/R)}$	i	DRN 63M 63MS 71M 71MS 80MK 80MS	DRN 80M 90S	DRN 90L	DRN 100L 100LM 100LS	DRN 112M	DRN 132M 132S
8.1	450	7110	7	172.17	✓					
9.4	450	7110	7	147.92	✓	✓				
10	450	7110	7	128.77	✓	✓	✓			
11	450	7110	7	120.63	✓	✓	✓			
13	450	7110	7	106.58	✓	✓	✓	✓		
14	450	7110	7	98.99	✓	✓	✓			
15	450	7110	7	89.71	✓	✓	✓	✓	✓	
17	450	7110	7	80.55	✓	✓	✓	✓	✓	
20	450	7110	7	69.23	✓	✓	✓			
21	450	6980	8	64.85	✓	✓	✓			
24	450	6630	8	57.29	✓	✓	✓	✓		
26	450	6430	8	53.22	✓	✓	✓			
29	450	6170	8	48.23	✓	✓	✓	✓	✓	
32	450	5900	8	43.30	✓	✓	✓	✓	✓	
37	450	5530	8	37.30*	✓	✓	✓	✓	✓	✓
39	450	5390	8	35.07	✓	✓	✓	✓	✓	✓
46	450	5050	8	30.18	✓	✓	✓	✓	✓	✓
51	450	4800	8	26.97	✓	✓	✓	✓	✓	✓
						 2				
53	450	4750	6	26.31	✓	✓	✓			
56	450	4640	6	24.99*	✓	✓	✓			
63	450	4370	7	21.93	✓	✓	✓	✓		
75	450	4050	7	18.60*	✓	✓	✓	✓	✓	
83	450	3860	7	16.79	✓	✓	✓	✓	✓	
94	435	3690	7	14.77*	✓	✓	✓	✓	✓	✓
100	430	3610	7	13.95*	✓	✓	✓	✓	✓	✓
117	405	3430	7	11.88	✓	✓	✓	✓	✓	✓
129	390	3330	7	10.79	✓	✓	✓	✓	✓	✓
149	370	3180	7	9.35	✓	✓	✓	✓	✓	✓
154	375	2010	9	9.06	✓	✓	✓	✓	✓	
175	355	2020	9	7.97	✓	✓	✓	✓	✓	✓
185	350	1950	9	7.53	✓	✓	✓	✓	✓	✓
218	335	1770	9	6.41	✓	✓	✓	✓	✓	✓
240	320	1820	10	5.82	✓	✓	✓	✓	✓	✓
277	305	1730	10	5.05	✓	✓	✓	✓	✓	✓
318	280	1900	10	4.39		✓	✓	✓	✓	✓

R57R37, n_e = 1400 min^{-1} — **450 Nm**

n_a min^{-1}	M_{amax} Nm	F_{Ra} N	$\varphi_{(/R)}$	i	DRN 63M 63MS 71M 71MS 80MK 80MS	DRN 80M 90S	DRN 90L	DRN 100L 100LM 100LS
					 3  3			
0.09	450	7110	7	14369	✓			
0.11	450	7110	7	12095	✓			
0.12	450	7110	7	10860	✓			

R57R37, n_e = 1400 min^{-1} **450 Nm**

n_a min^{-1}	M_{amax} Nm	F_{Ra} N	$\varphi_{(/R)}$	i	DRN 63M 63MS 71M 71MS 80MK 80MS	DRN 80M 90S	DRN 90L	DRN 100L 100LM 100LS
0.14	450	7110	7	9445	✓	✓		
0.16	450	7110	7	8480	✓	✓		
0.19	450	7110	7	7312	✓	✓	✓	
0.21	450	7110	7	6521	✓	✓	✓	✓
0.25	450	7110	7	5585	✓	✓	✓	
0.28	450	7110	7	4928	✓	✓	✓	✓
0.31	450	7110	8	4378	✓	✓	✓	
0.36	450	7110	7	3873	✓	✓	✓	
0.41	450	7110	8	3344	✓	✓	✓	
0.48	450	7110	7	2907	✓	✓	✓	✓
0.54	450	7110	8	2567	✓	✓	✓	
0.62	450	7110	8	2244	✓	✓	✓	✓
0.71	450	7110	7	1967	✓	✓	✓	✓
					 2 3			
0.47	450	7110	7	2957	✓			
0.55	450	7110	8	2508	✓			
0.6	450	7110	7	2309	✓	✓		
0.7	450	7110	7	1991	✓	✓	✓	
0.79	450	7110	8	1768	✓	✓		
0.92	450	7110	7	1520	✓	✓	✓	
1	450	7110	7	1342	✓	✓	✓	✓
1.2	450	7110	8	1164	✓	✓	✓	
1.3	450	7110	8	1027	✓	✓	✓	✓
1.5	450	7110	8	894	✓	✓	✓	
1.7	450	7110	8	805	✓	✓	✓	
2	450	7110	8	683	✓	✓	✓	
2.3	450	7110	8	603	✓	✓	✓	✓
2.6	450	7110	8	534	✓	✓	✓	✓
3	450	7110	8	454	✓	✓	✓	✓
3.4	450	7110	8	410	✓	✓	✓	✓
					 3 2			
0.8	450	7110	7	1732	✓	✓	✓	
0.9	450	7110	7	1555	✓	✓	✓	
1	450	7110	7	1399	✓	✓	✓	✓
1.1	450	7110	7	1189	✓	✓	✓	✓
1.3	450	7110	8	1034	✓	✓	✓	
1.7	450	7110	8	782	✓	✓	✓	
2	450	7110	8	678	✓	✓	✓	✓
2.3	450	7110	7	604	✓	✓	✓	✓
2.6	450	7110	7	537	✓	✓	✓	✓
2.9	450	7110	8	471	✓	✓	✓	✓
3.9	450	7110	9	357	✓	✓	✓	✓
4.3	450	7110	9	319	✓	✓	✓	✓
5.1	450	7110	9	273	✓	✓	✓	✓
5.8	450	7110	8	241	✓	✓	✓	✓
6.5	450	7110	9	215	✓	✓	✓	✓
7.4	450	7110	8	187	✓	✓	✓	✓
8.5	450	7110	8	164	✓	✓	✓	✓
9.8	450	7110	9	142	✓	✓	✓	✓

R57R37, n_e = 1400 min^{-1} — **450 Nm**

n_a min^{-1}	M_{amax} Nm	F_{Ra} N	$\varphi_{(/R)}$	i	DRN 63M 63MS 71M 71MS 80MK 80MS	DRN 80M 90S	DRN 90L	DRN 100L 100LM 100LS
					2	2		
3.8	450	7110	8	359	✓	✓	✓	
4.3	450	7110	8	324	✓	✓	✓	
4.8	450	7110	8	290	✓	✓	✓	✓
5.3	450	7110	8	262	✓	✓	✓	✓
5.6	450	7110	8	246	✓	✓	✓	✓
6.3	450	7110	8	220	✓	✓	✓	✓
7.4	450	7110	8	188	✓	✓	✓	✓
8.8	450	7110	8	159	✓	✓	✓	✓
9.5	450	7110	8	146	✓	✓	✓	✓
10	450	7110	8	134	✓	✓	✓	✓

R67, n_e = 1400 min^{-1} — **600 Nm**

n_a min^{-1}	M_{amax} Nm	F_{Ra} N	$\varphi_{(/R)}$	i	DRN 63M 63MS 71M 71MS 80MK 80MS	DRN 80M 90S	DRN 90L	DRN 100L 100LM 100LS	DRN 112M	DRN 132M 132S
					3					
7	600	7560	6	199.81	✓					
7.6	600	7560	6	184.07	✓					
8.8	600	7560	6	158.14	✓	✓				
10	600	7560	6	137.67	✓	✓	✓			
10	600	7560	6	128.97	✓	✓	✓			
12	600	7560	6	113.94	✓	✓	✓	✓		
13	600	7560	6	105.83	✓	✓	✓			
14	600	7560	6	95.91	✓	✓	✓	✓	✓	
16	600	7560	6	86.11	✓	✓	✓	✓	✓	
18	600	7560	7	74.17	✓	✓	✓	✓	✓	✓
20	600	7560	7	69.75	✓	✓	✓	✓	✓	✓
22	600	7560	7	61.26	✓	✓	✓	✓		
24	600	7560	7	56.89	✓	✓	✓			
27	600	7560	7	51.56	✓	✓	✓	✓	✓	
30	600	7560	7	46.29	✓	✓	✓	✓	✓	
35	580	7790	7	39.88*	✓	✓	✓	✓	✓	✓
37	570	7900	7	37.50	✓	✓	✓	✓	✓	✓
43	540	8210	7	32.27	✓	✓	✓	✓	✓	✓
48	520	8400	7	28.83	✓	✓	✓	✓	✓	✓
					2					
49	540	8210	6	28.13	✓	✓	✓			
52	540	8210	6	26.72	✓	✓	✓			
59	560	8010	6	23.44	✓	✓	✓	✓		
70	600	7560	6	19.89	✓	✓	✓	✓	✓	
77	590	7330	6	17.95	✓	✓	✓	✓	✓	
88	560	7130	6	15.79	✓	✓	✓	✓	✓	✓
93	550	6980	6	14.91	✓	✓	✓	✓	✓	✓

R67, n_e = 1400 min^{-1} — **600 Nm**

n_a min^{-1}	M_{amax} Nm	F_{Ra} N	$\varphi_{(/R)}$	i	DRN 63M 63MS 71M 71MS 80MK 80MS	DRN 80M 90S	DRN 90L	DRN 100L 100LM 100LS	DRN 112M	DRN 132M 132S
110	520	6650	6	12.70	✓	✓	✓	✓	✓	✓
121	500	6500	7	11.54	✓	✓	✓	✓	✓	✓
140	470	6220	7	10.00	✓	✓	✓	✓	✓	✓
160	440	5960	7	8.70*		✓	✓	✓	✓	✓
179	380	5830	8	7.79	✓	✓	✓	✓	✓	✓
190	370	5790	8	7.36*	✓	✓	✓	✓	✓	✓
223	330	5590	9	6.27	✓	✓	✓	✓	✓	✓
245	310	5450	9	5.70	✓	✓	✓	✓	✓	✓
283	290	5210	9	4.93	✓	✓	✓	✓	✓	✓
326	270	5000	10	4.29		✓	✓	✓	✓	✓

R67R37, n_e = 1400 min^{-1} — **600 Nm**

n_a min^{-1}	M_{amax} Nm	F_{Ra} N	$\varphi_{(/R)}$	i	DRN 63M 63MS 71M 71MS 80MK 80MS	DRN 80M 90S	DRN 90L	DRN 100L 100LM 100LS
					3 3			
0.09	600	7560	7	15361	✓			
0.1	600	7560	7	12931	✓			
0.11	600	7560	7	11996	✓	✓		
0.13	600	7560	7	10097	✓	✓		
0.15	600	7560	7	9066	✓	✓		
0.17	600	7560	7	7816	✓	✓	✓	
0.2	600	7560	7	6732	✓	✓	✓	
0.23	600	7560	7	5970	✓	✓	✓	
0.26	600	7560	7	5268	✓	✓	✓	✓
0.29	600	7560	7	4680	✓	✓	✓	
0.33	600	7560	7	4136	✓	✓		
0.39	600	7560	7	3566	✓	✓	✓	
0.44	600	7560	7	3125	✓	✓	✓	
0.51	600	7560	7	2745	✓	✓	✓	
0.58	600	7560	7	2403	✓	✓	✓	✓
					2 3			
0.52	600	7560	7	2682	✓			
0.56	600	7560	7	2460	✓			
0.66	600	7560	7	2094	✓	✓		
0.77	600	7560	7	1805	✓	✓	✓	
0.85	600	7560	7	1629	✓	✓	✓	
0.95	600	7560	7	1471	✓	✓	✓	✓
1	600	7560	7	1379	✓	✓	✓	
1.2	600	7560	7	1109	✓	✓		
1.4	600	7560	7	956	✓	✓	✓	
1.5	600	7560	7	891	✓	✓	✓	
1.9	600	7560	7	730	✓	✓	✓	
2.1	600	7560	7	644	✓	✓	✓	✓
2.4	600	7560	7	571	✓	✓	✓	✓

R67R37, n_e = 1400 min^{-1} — **600 Nm**

n_a min^{-1}	M_{amax} Nm	F_{Ra} N	$\varphi_{(/R)}$	i	DRN 63M 63MS 71M 71MS 80MK 80MS	DRN 80M 90S	DRN 90L	DRN 100L 100LM 100LS
2.8	600	7560	7	486	✓	✓	✓	✓
					 3 2			
0.65	600	7560	7	2136	✓	✓		
0.75	600	7560	7	1852	✓	✓	✓	
0.84	600	7560	7	1652	✓	✓		
0.97	600	7560	7	1432	✓	✓	✓	
1.1	600	7560	7	1259	✓	✓	✓	
1.2	600	7560	7	1106	✓	✓	✓	
1.6	600	7560	7	836	✓	✓	✓	
1.8	600	7560	7	750	✓	✓	✓	✓
2.1	600	7560	7	646	✓	✓	✓	✓
2.4	600	7560	7	574	✓	✓	✓	✓
2.8	600	7560	7	495	✓	✓	✓	✓
3.1	600	7560	7	438	✓	✓	✓	✓
3.6	600	7560	7	388	✓	✓	✓	✓
4	600	7560	8	344	✓	✓	✓	✓
4.7	600	7560	7	294	✓	✓	✓	✓
5.3	600	7560	8	261	✓	✓	✓	✓
5.9	600	7560	8	234	✓	✓	✓	✓
7	600	7560	8	200	✓	✓	✓	✓
7.9	600	7560	8	176	✓	✓	✓	✓
8.8	600	7560	8	158	✓	✓	✓	✓
					 2 2			
3.1	600	7560	7	443	✓	✓		
3.6	600	7560	7	384	✓	✓	✓	
3.8	600	7560	7	359	✓	✓	✓	
4.5	600	7560	7	310	✓	✓	✓	✓
5.3	600	7560	7	264	✓	✓	✓	✓
5.9	600	7560	7	235	✓	✓	✓	✓
6.9	600	7560	7	201	✓	✓	✓	✓
7.7	600	7560	7	181	✓	✓	✓	✓
8.8	600	7560	7	159	✓	✓	✓	✓

R77, n_e = 1400 min^{-1} — **820 Nm**

n_a min^{-1}	M_{amax} Nm	F_{Ra} N	$\varphi_{(/R)}$	i	DRN 63M 63MS 71M 71MS 80MK 80MS	DRN 80M 90S	DRN 90L	DRN 100L 100LM 100LS	DRN 112M	DRN 132M 132S	DRN 132L 160L 160M
					 3						
7.1	820	9920	6	195.24*	✓						
8.4	820	9920	6	166.59	✓	✓					
9.6	820	9920	6	145.67	✓	✓	✓				
10	820	9920	6	138.39	✓	✓	✓				
11	820	9920	6	121.42	✓	✓	✓	✓			
13	820	9920	6	102.99	✓	✓	✓	✓	✓		

R77, n_e = 1400 min^{-1} — **820 Nm**

n_a min^{-1}	M_{amax} Nm	F_{Ra} N	$\varphi_{(/R)}$	i	DRN 63M 63MS 71M 71MS 80MK 80MS	DRN 80M 90S	DRN 90L	DRN 100L 100LM 100LS	DRN 112M	DRN 132M 132S	DRN 132L 160L 160M
15	820	9920	6	92.97	✓	✓	✓	✓	✓		
17	820	9920	6	81.80	✓	✓	✓	✓	✓	✓	
18	820	9920	7	77.24	✓	✓	✓	✓	✓	✓	
21	820	9920	7	65.77	✓	✓	✓	✓	✓	✓	
24	820	9920	7	57.68	✓	✓	✓	✓	✓		
26	820	9920	7	52.07	✓	✓	✓	✓	✓		
30	820	9920	7	45.81	✓	✓	✓	✓	✓	✓	
32	820	9920	7	43.26	✓	✓	✓	✓	✓	✓	
38	820	9920	7	36.83	✓	✓	✓	✓	✓	✓	
41	820	9920	7	33.47	✓	✓	✓	✓	✓	✓	✓
48	820	9920	7	29.00	✓	✓	✓	✓	✓	✓	✓
55	780	10100	7	25.23		✓	✓	✓	✓	✓	✓
						 2					
59	820	8870	6	23.37	✓	✓	✓	✓	✓		
65	820	8250	6	21.43	✓	✓	✓	✓	✓		
74	780	7980	6	18.80	✓	✓	✓	✓	✓	✓	
78	780	7620	6	17.82*	✓	✓	✓	✓	✓	✓	
89	740	7390	6	15.60	✓	✓	✓	✓	✓	✓	
99	720	7050	6	14.05	✓	✓	✓	✓	✓	✓	✓
113	690	6740	6	12.33	✓	✓	✓	✓	✓	✓	✓
128	660	6490	7	10.88		✓	✓	✓	✓	✓	✓
145	630	6300	7	9.64		✓	✓	✓	✓	✓	✓
162	630	4110	7	8.59	✓	✓	✓	✓	✓	✓	
180	610	3940	8	7.74	✓	✓	✓	✓	✓	✓	✓
206	580	3850	8	6.79	✓	✓	✓	✓	✓	✓	✓
233	540	3990	8	5.99*		✓	✓	✓	✓	✓	✓
263	510	3990	8	5.31*		✓	✓	✓	✓	✓	✓

R77R37, n_e = 1400 min^{-1} — **820 Nm**

n_a min^{-1}	M_{amax} Nm	F_{Ra} N	$\varphi_{(/R)}$	i	DRN 63M 63MS 71M 71MS 80MK 80MS	DRN 80M 90S	DRN 90L	DRN 100L 100LM 100LS
					 3  3			
0.08	820	9920	7	16370	✓			
0.09	820	9920	7	15015	✓			
0.1	820	9920	7	13885	✓			
0.1	820	9920	7	12783	✓	✓		
0.12	820	9920	7	11021	✓	✓	✓	
0.14	820	9920	7	9788	✓	✓		
0.16	820	9920	7	8714	✓	✓	✓	
0.18	820	9920	7	7617	✓	✓	✓	✓
0.2	820	9920	7	6770	✓	✓		
0.23	820	9920	7	5838	✓	✓	✓	
0.27	820	9920	7	5184	✓	✓		
0.31	820	9920	7	4470	✓	✓	✓	

R77R37, n_e = 1400 min^{-1} **820 Nm**

n_a min^{-1}	M_{amax} Nm	F_{Ra} N	$\varphi_{(/R)}$	i	DRN 63M 63MS 71M 71MS 80MK 80MS	DRN 80M 90S	DRN 90L	DRN 100L 100LM 100LS
0.35	820	9920	7	3999	✓	✓	✓	
0.4	820	9920	7	3488	✓	✓	✓	✓
0.45	820	9920	8	3053	✓	✓		
0.52	820	9920	7	2671	✓	✓	✓	✓
					2 3			
0.44	820	9920	7	3151	✓			
0.48	820	9920	7	2890	✓			
0.56	820	9920	7	2460	✓	✓		
0.66	820	9920	7	2121	✓	✓	✓	
0.7	820	9920	7	1977	✓	✓	✓	
0.81	820	9920	7	1728	✓	✓	✓	✓
0.86	820	9920	7	1620	✓	✓	✓	
0.97	820	9920	7	1430	✓	✓	✓	✓
1	820	9920	7	1303	✓	✓		
1.2	820	9920	7	1124	✓	✓	✓	
1.3	820	9920	7	1047	✓	✓	✓	
1.5	820	9920	7	915	✓	✓	✓	✓
1.6	820	9920	7	858	✓	✓	✓	
1.8	820	9920	7	757	✓	✓	✓	✓
2	820	9920	7	671	✓	✓	✓	✓
2.4	820	9920	7	571	✓	✓	✓	✓
					3 2			
0.59	820	9920	7	2345	✓	✓	✓	
0.67	820	9920	7	2070	✓	✓		
0.76	820	9920	7	1822	✓	✓		
0.88	820	9920	7	1580	✓	✓	✓	
1	820	9920	7	1394	✓	✓	✓	
1.1	820	9920	7	1218	✓	✓	✓	✓
1.2	820	9920	7	1084	✓	✓	✓	✓
1.4	820	9920	7	940	✓	✓	✓	
1.7	820	9920	7	821	✓	✓	✓	✓
1.9	820	9920	7	731	✓	✓	✓	✓
2.1	820	9920	8	646	✓	✓	✓	
2.5	820	9920	8	560	✓	✓	✓	
2.8	820	9920	8	488	✓	✓	✓	✓
3.2	820	9920	8	436	✓	✓	✓	✓
3.7	820	9920	7	373	✓	✓	✓	✓
4.2	820	9920	8	327	✓	✓	✓	✓
4.8	820	9920	8	289	✓	✓	✓	✓
5.3	820	9920	8	260	✓	✓	✓	✓
6.2	820	9920	7	224	✓	✓	✓	✓
7.1	820	9920	8	197	✓	✓	✓	✓
8.2	820	9920	8	169	✓	✓	✓	✓
9.3	820	9920	8	149	✓	✓	✓	✓
					2 2			
2.6	820	9920	7	520	✓	✓		
3.1	820	9920	7	451	✓	✓	✓	
3.3	820	9920	7	422	✓	✓	✓	
3.8	820	9920	7	365	✓	✓	✓	✓

R77R37, n_e = 1400 min^{-1} — **820 Nm**

n_a min^{-1}	M_{amax} Nm	F_{Ra} N	$\varphi_{(/R)}$	i	DRN 63M 63MS 71M 71MS 80MK 80MS	DRN 80M 90S	DRN 90L	DRN 100L 100LM 100LS
4.5	820	9920	7	310	✓	✓	✓	✓
5	820	9920	7	276	✓	✓	✓	✓
5.9	820	9920	7	236	✓	✓	✓	✓
6.3	820	9920	7	221	✓	✓	✓	✓
7.5	820	9920	7	186	✓	✓	✓	✓

R87, n_e = 1400 min^{-1} — **1550 Nm**

n_a min^{-1}	M_{amax} Nm	F_{Ra} N	$\varphi_{(/R)}$	i	DRN 71M 80MK 80MS	DRN 80M 90S	DRN 90L	DRN 100L 100LM 100LS	DRN 112M	DRN 132M 132S	DRN 132L 160L 160M	DRN 180L 180M	DRN 200L
							3						
5.6	1550	16900	6	246.54	✓	✓							
6.4	1550	16900	6	216.54	✓	✓	✓						
6.8	1550	16900	6	205.71	✓	✓	✓						
7.7	1550	16900	6	181.77	✓	✓	✓	✓					
9	1550	16900	6	155.34	✓	✓	✓	✓	✓				
9.8	1550	16900	6	142.41	✓	✓	✓	✓	✓				
11	1550	16900	6	124.97	✓	✓	✓	✓	✓	✓			
11	1550	16900	6	118.43*	✓	✓	✓	✓	✓	✓			
13	1550	16900	6	103.65	✓	✓	✓	✓	✓	✓			
14	1550	16900	6	93.38	✓	✓	✓	✓	✓	✓	✓		
17	1550	16900	6	81.92	✓	✓	✓	✓	✓	✓	✓		
19	1550	16900	6	72.57	✓	✓	✓	✓	✓				
21	1550	15800	6	63.68*	✓	✓	✓	✓	✓	✓			
23	1550	15200	6	60.35*	✓	✓	✓	✓	✓	✓			
26	1550	13500	6	52.82	✓	✓	✓	✓	✓	✓			
29	1550	12300	7	47.58	✓	✓	✓	✓	✓	✓	✓		
33	1550	10800	7	41.74	✓	✓	✓	✓	✓	✓	✓		
38	1550	9470	7	36.84*		✓	✓	✓	✓	✓	✓	✓	
42	1550	8220	7	32.66*		✓	✓	✓	✓	✓	✓	✓	
50	1500	7370	7	27.88		✓	✓	✓	✓	✓	✓	✓	
							2						
40	1500	9480	5	34.40*	✓	✓	✓	✓	✓				
44	1550	7820	5	31.40	✓	✓	✓	✓	✓				
50	1550	6640	6	27.84*	✓	✓	✓	✓	✓	✓			
59	1550	5000	6	23.40	✓	✓	✓	✓	✓	✓			
65	1500	4970	6	21.51	✓	✓	✓	✓	✓	✓	✓		
73	1440	4800	6	19.10	✓	✓	✓	✓	✓	✓	✓		
81	1390	4580	6	17.08*		✓	✓	✓	✓	✓	✓	✓	
91	1340	4450	6	15.35		✓	✓	✓	✓	✓	✓	✓	
105	1280	4220	6	13.33		✓	✓	✓	✓	✓	✓	✓	✓
117	1230	4120	6	11.93				✓	✓	✓	✓	✓	✓
141	1180	3520	6	9.90*				✓	✓	✓	✓	✓	✓
153	1210	99	6	9.14*		✓	✓	✓	✓	✓	✓	✓	
170	1160	225	7	8.22		✓	✓	✓	✓	✓	✓	✓	
196	1070	820	7	7.13		✓	✓	✓	✓	✓	✓	✓	✓
219	1020	970	7	6.39				✓	✓	✓	✓	✓	✓
264	910	1710	7	5.30*				✓	✓	✓	✓	✓	✓

R87R57, n_e = 1400 min^{-1} **1550 Nm**

n_a min^{-1}	M_{amax} Nm	F_{Ra} N	$\varphi_{(/R)}$	i	DRN 63M 63MS 71M 71MS 80MK 80MS	DRN 80M 90S	DRN 90L	DRN 100L 100LM 100LS	DRN 112M	DRN 132M 132S
					 3 3					
0.08	1550	16900	6	17452	✓					
0.09	1550	16900	6	15310	✓					
0.1	1550	16900	6	13813	✓	✓				
0.11	1550	16900	6	12025	✓	✓	✓			
0.13	1550	16900	6	10549	✓	✓	✓			
0.15	1550	16900	6	9244	✓	✓	✓			
0.17	1550	16900	6	8109	✓	✓	✓			
0.19	1550	16900	7	7038	✓	✓				
0.22	1550	16900	7	6174	✓	✓				
0.25	1550	16900	7	5449	✓	✓				
0.28	1550	16900	7	4831	✓	✓				
0.33	1550	16900	7	4206	✓	✓	✓			
0.37	1550	16900	7	3744	✓	✓	✓	✓	✓	
0.43	1550	16900	7	3233	✓	✓	✓			
0.48	1550	16900	6	2873	✓	✓	✓	✓	✓	✓
0.55	1550	16900	6	2518	✓	✓	✓	✓	✓	✓
0.63	1550	16900	6	2209	✓	✓	✓	✓	✓	✓
0.71	1550	16900	7	1961	✓	✓	✓			
1.4	1550	16900	7	994	✓	✓	✓	✓	✓	✓
1.5	1550	16900	7	881	✓	✓	✓	✓	✓	✓
					 2 3					
0.34	1550	16900	6	4020	✓					
0.37	1550	16900	6	3703	✓					
0.43	1550	16900	6	3182	✓	✓				
0.5	1550	16900	6	2770	✓	✓	✓			
0.53	1550	16900	6	2595	✓	✓	✓			
0.65	1550	16900	6	2129	✓	✓	✓			
0.72	1550	16900	6	1930	✓	✓	✓	✓	✓	
0.8	1550	16900	6	1733	✓	✓	✓	✓	✓	
0.94	1550	16900	6	1489	✓	✓	✓			
1	1550	16900	6	1395	✓	✓	✓			
1.1	1550	16900	6	1232	✓	✓	✓	✓		
1.2	1550	16900	6	1145	✓	✓	✓			
1.3	1550	16900	6	1037	✓	✓	✓	✓	✓	
1.5	1550	16900	6	931	✓	✓	✓	✓	✓	
1.7	1550	16900	6	802	✓	✓	✓	✓	✓	✓
1.8	1550	16900	6	754	✓	✓	✓	✓	✓	✓
2.1	1550	16900	6	649	✓	✓	✓	✓	✓	✓
2.4	1550	16900	6	580	✓	✓	✓	✓	✓	✓
					 3 2					
0.8	1550	16900	6	1737	✓	✓	✓	✓	✓	
0.91	1550	16900	6	1524	✓	✓	✓	✓	✓	
1	1550	16900	6	1303	✓	✓	✓	✓	✓	✓
1.2	1550	16900	6	1143	✓	✓	✓	✓	✓	✓
1.3	1550	16900	6	1008	✓	✓	✓	✓	✓	✓
1.5	1550	16900	7	885	✓	✓	✓	✓	✓	
1.8	1550	16900	7	776	✓	✓	✓	✓	✓	
2	1550	16900	7	685	✓	✓	✓	✓	✓	

R87R57, n_e = 1400 min^{-1} — **1550 Nm**

n_a min^{-1}	M_{amax} Nm	F_{Ra} N	$\varphi_{(/R)}$	i	DRN 63M 63MS 71M 71MS 80MK 80MS	DRN 80M 90S	DRN 90L	DRN 100L 100LM 100LS	DRN 112M	DRN 132M 132S
2.3	1550	16900	6	599	✓	✓	✓	✓	✓	✓
2.6	1550	16900	6	525	✓	✓	✓	✓	✓	✓
3	1550	16900	7	456	✓	✓	✓	✓	✓	✓
3.5	1550	16900	7	398	✓	✓	✓	✓	✓	✓
3.9	1550	16900	7	352	✓	✓	✓	✓	✓	✓
4.5	1550	16900	7	305	✓	✓	✓	✓	✓	✓
5.2	1550	16900	7	268	✓	✓	✓	✓	✓	✓
5.9	1550	16900	7	236	✓	✓	✓	✓	✓	✓
6.6	1550	16900	7	209		✓	✓	✓	✓	✓
						2	2			
2.6	1550	16900	6	538	✓	✓	✓			
2.9	1550	16900	6	472	✓	✓	✓	✓		
3.5	1550	16900	6	400	✓	✓	✓	✓	✓	
3.8	1550	16900	6	361	✓	✓	✓	✓	✓	
4.6	1550	16900	6	300	✓	✓	✓	✓	✓	✓
5.4	1550	16900	6	256	✓	✓	✓	✓	✓	✓
6	1550	16900	6	232	✓	✓	✓	✓	✓	✓
7.1	1550	16900	7	195	✓	✓	✓	✓	✓	

R97, n_e = 1400 min^{-1} — **3000 Nm**

n_a min^{-1}	M_{amax} Nm	F_{Ra} N	$\varphi_{(/R)}$	i	DRN 71M 71MS 80MK 80MS	DRN 80M 90S	DRN 90L	DRN 100L 100LM 100LS	DRN 112M	DRN 132M 132S	DRN 132L 160L 160M	DRN 180L 180M	DRN 200L 225S
							3						
4.8	3000	19800	6	289.74	✓	✓							
5.4	3000	19800	6	255.71	✓	✓	✓						
5.8	3000	19800	6	241.25	✓	✓	✓						
6.4	3000	19800	6	216.28	✓	✓	✓	✓					
7.5	3000	19800	6	186.30	✓	✓	✓	✓	✓				
8.2	3000	19800	6	170.02	✓	✓	✓	✓	✓				
9.2	3000	19800	6	150.78	✓	✓	✓	✓	✓	✓			
11	3000	19800	6	126.75	✓	✓	✓	✓	✓	✓			
12	3000	19800	6	116.48	✓	✓	✓	✓	✓	✓	✓		
13	3000	19800	6	103.44	✓	✓	✓	✓	✓	✓	✓		
15	3000	19800	6	92.48		✓	✓	✓	✓	✓	✓	✓	
16	3000	19800	6	83.15		✓	✓	✓	✓	✓	✓	✓	
19	3000	18000	6	72.17		✓	✓	✓	✓	✓	✓	✓	✓
21	3000	16300	6	65.21	✓	✓	✓	✓	✓	✓			
23	3000	14800	6	59.92	✓	✓	✓	✓	✓	✓	✓		
26	3000	12900	6	53.21	✓	✓	✓	✓	✓	✓	✓		
29	3000	11100	6	47.58		✓	✓	✓	✓	✓	✓	✓	
32	3000	9480	6	42.78		✓	✓	✓	✓	✓	✓	✓	
37	3000	7410	6	37.13		✓	✓	✓	✓	✓	✓	✓	✓
42	2890	7160	6	33.25				✓	✓	✓	✓	✓	✓
50	2670	7260	6	27.58				✓	✓	✓	✓	✓	✓

R97, n_e = 1400 min^{-1}

n_a min^{-1}	M_{amax} Nm	F_{Ra} N	$\varphi_{(/R)}$	i	DRN 71M 71MS 80MK 80MS	DRN 80M 90S	DRN 90L	DRN 100L 100LM 100LS	DRN 112M	DRN 132M 132S	DRN 132L 160L 160M	DRN 180L 180M	3000 Nm DRN 200L 225S
							2						
43	2560	10600	5	32.05	✓	✓	✓	✓	✓	✓			
51	2560	8380	5	27.19	✓	✓	✓	✓	✓	✓			
55	2830	4140	5	25.03	✓	✓	✓	✓	✓	✓	✓		
62	2720	4060	5	22.37	✓	✓	✓	✓	✓	✓	✓		
69	2610	4110	5	20.14		✓	✓	✓	✓	✓	✓	✓	
76	2500	4270	6	18.24		✓	✓	✓	✓	✓	✓	✓	
86	2400	4130	6	16.17		✓	✓	✓	✓	✓	✓	✓	✓
95	2300	4240	6	14.62				✓	✓	✓	✓	✓	✓
112	2190	3850	6	12.39				✓	✓	✓	✓	✓	✓
129	2090	3720	6	10.83						✓	✓	✓	✓
150	2030	0	6	9.29		✓	✓	✓	✓	✓	✓	✓	✓
166	2030	0	6	8.39				✓	✓	✓	✓	✓	✓
196	2000	0	6	7.12				✓	✓	✓	✓	✓	✓
225	1890	0	6	6.21						✓	✓	✓	✓
269	1780	0	6	5.20						✓	✓	✓	✓
311	1630	0	6	4.50*						✓	✓	✓	✓

R97R57, n_e = 1400 min^{-1}

n_a min^{-1}	M_{amax} Nm	F_{Ra} N	$\varphi_{(/R)}$	i	DRN 63M 63MS 71M 71MS 80MK 80MS	DRN 80M 90S	DRN 90L	DRN 100L 100LM 100LS	DRN 112M	3000 Nm DRN 132M 132S
						3	3			
0.06	3000	19800	6	21769	✓					
0.07	3000	19800	6	19332	✓					
0.08	3000	19800	6	17230	✓	✓				
0.09	3000	19800	6	14999	✓	✓	✓			
0.1	3000	19800	6	13320	✓	✓	✓			
0.12	3000	19800	6	11156	✓	✓	✓			
0.13	3000	19800	6	10030	✓	✓	✓			
0.16	3000	19800	6	8706	✓	✓	✓			
0.18	3000	19800	6	7692	✓	✓	✓	✓		
0.2	3000	19800	6	6708	✓	✓	✓			
0.23	3000	19800	6	5931	✓	✓	✓			
0.27	3000	19800	7	5161	✓	✓	✓			
0.3	3000	19800	7	4559	✓	✓	✓	✓		
0.34	3000	19800	6	4004	✓	✓	✓	✓	✓	
0.4	3000	19800	6	3481	✓	✓	✓	✓	✓	
						2	3			
0.29	3000	19800	6	4678	✓					
0.32	3000	19800	6	4309	✓					
0.37	3000	19800	6	3702	✓	✓				
0.46	3000	19800	6	3019	✓	✓	✓			
0.52	3000	19800	6	2668	✓	✓	✓	✓		
0.62	3000	19800	6	2245	✓	✓	✓	✓	✓	

R97R57, n_e = 1400 min^{-1} — **3000 Nm**

n_a min^{-1}	M_{amax} Nm	F_{Ra} N	$\varphi_{(/R)}$	i	DRN 63M 63MS 71M 71MS 80MK 80MS	DRN 80M 90S	DRN 90L	DRN 100L 100LM 100LS	DRN 112M	DRN 132M 132S
0.69	3000	19800	6	2016	✓	✓	✓	✓	✓	
0.8	3000	19800	6	1733	✓	✓	✓			
0.86	3000	19800	6	1623	✓	✓	✓			
0.97	3000	19800	6	1434	✓	✓	✓	✓		
1.1	3000	19800	6	1207	✓	✓	✓	✓	✓	
1.2	3000	19800	6	1084	✓	✓	✓	✓	✓	
1.4	3000	19800	6	934	✓	✓	✓	✓	✓	✓
1.5	3000	19800	6	878	✓	✓	✓	✓	✓	✓
1.8	3000	19800	6	755	✓	✓	✓	✓	✓	✓
						3 2				
0.45	3000	19800	6	3065	✓	✓	✓			
0.51	3000	19800	6	2722	✓	✓	✓			
0.6	3000	19800	6	2311	✓	✓	✓			
0.67	3000	19800	6	2078	✓	✓	✓			
0.76	3000	19800	6	1823	✓	✓	✓	✓		
0.88	3000	19800	6	1583	✓	✓	✓	✓		
1	3000	19800	6	1396	✓	✓	✓	✓	✓	
1.1	3000	19800	6	1228	✓	✓	✓	✓	✓	✓
1.3	3000	19800	7	1069	✓	✓	✓			
1.4	3000	19800	7	938	✓	✓	✓	✓		
1.6	3000	19800	6	824	✓	✓	✓	✓	✓	✓
1.8	3000	19800	6	737	✓	✓	✓	✓	✓	✓
2.2	3000	19800	7	632	✓	✓	✓	✓	✓	✓
2.5	3000	19800	6	560	✓	✓	✓	✓	✓	✓
2.8	3000	19800	6	484	✓	✓	✓	✓	✓	✓
3.2	3000	19800	7	431	✓	✓	✓	✓	✓	
3.6	3000	19800	7	379	✓	✓	✓	✓	✓	✓
4.1	3000	19800	7	336	✓	✓	✓	✓	✓	
4.7	3000	19800	7	296	✓	✓	✓	✓	✓	✓
5.6	3000	19800	7	249	✓	✓	✓	✓	✓	✓
5.9	3000	19800	7	234		✓	✓	✓	✓	✓
6.6	3000	19800	7	209		✓	✓	✓	✓	✓
						2 2				
2.2	3000	19800	6	625	✓	✓	✓			
2.5	3000	19800	6	549	✓	✓	✓	✓		
3	3000	19800	6	466	✓	✓	✓	✓	✓	
3.3	3000	19800	6	420	✓	✓	✓	✓	✓	
3.7	3000	19800	6	370	✓	✓	✓	✓	✓	✓
4	3000	19800	6	349	✓	✓	✓	✓	✓	✓
4.7	3000	19800	6	297	✓	✓	✓	✓	✓	✓
5.1	3000	19800	6	270	✓	✓	✓	✓	✓	✓
6.1	3000	19800	6	227	✓	✓	✓	✓	✓	

R107, n_e = 1400 min^{-1} — **4300 Nm**

n_a min^{-1}	M_{amax} Nm	F_{Ra} N	$\varphi_{(/R)}$	i	DRN 100L 100LM 100LS	DRN 112M	DRN 132M 132S	DRN 132L 160L 160M	DRN 180L 180M	DRN 200L 225M 225S
						3				
5.5	4300	29500	7	251.15	✓	✓				
6	4300	29500	7	229.95	✓	✓				
6.8	4300	29500	7	203.16	✓	✓	✓			
8.1	4300	29500	7	172.34	✓	✓	✓			
8.8	4300	29500	7	158.68	✓	✓	✓	✓		
9.8	4300	29500	7	141.83	✓	✓	✓	✓		
10	4300	29500	7	127.68	✓	✓	✓	✓	✓	
12	4300	29500	7	115.63	✓	✓	✓	✓	✓	
13	4300	29500	7	102.53	✓	✓	✓	✓	✓	✓
15	4300	29500	7	92.70	✓	✓	✓	✓	✓	✓
17	4300	29500	7	78.57	✓	✓	✓	✓	✓	✓
19	4300	29500	7	72.88	✓	✓	✓	✓		
21	4300	29200	7	65.60*	✓	✓	✓	✓	✓	
23	4300	28000	7	59.41	✓	✓	✓	✓	✓	
26	4300	26600	7	52.68	✓	✓	✓	✓	✓	✓
29	4300	25500	7	47.63	✓	✓	✓	✓	✓	✓
34	4300	23800	7	40.37*	✓	✓	✓	✓	✓	✓
39	4300	22400	7	35.26			✓	✓	✓	✓
47	4300	20700	7	29.49			✓	✓	✓	✓
						2				
45	4300	21100	7	30.77	✓	✓	✓	✓		
50	4300	20100	7	27.58	✓	✓	✓	✓		
56	4300	19200	7	24.90*	✓	✓	✓	✓	✓	
61	4300	18300	7	22.62	✓	✓	✓	✓	✓	
69	4300	17300	7	20.07	✓	✓	✓	✓	✓	✓
76	4300	16600	7	18.21	✓	✓	✓	✓	✓	✓
89	4300	15400	7	15.65	✓	✓	✓	✓	✓	✓
102	4300	14400	7	13.66			✓	✓	✓	✓
120	4300	13300	7	11.59			✓	✓	✓	✓
138	4300	12400	7	10.13			✓	✓	✓	✓
163	4300	11300	7	8.56				✓	✓	✓
178	2970	13800	9	7.86			✓	✓	✓	✓
210	2970	12800	9	6.66			✓	✓	✓	✓
240	2970	12100	9	5.82			✓	✓	✓	✓
284	2900	11300	9	4.92				✓	✓	✓

R107R77, n_e = 1400 min^{-1} — **4300 Nm**

n_a min^{-1}	M_{amax} Nm	F_{Ra} N	$\varphi_{(/R)}$	i	DRN 63M 63MS 71M 71MS 80MK 80MS	DRN 80M 90S	DRN 90L	DRN 100L 100LM 100LS	DRN 112M	DRN 132M 132S	DRN 132L 160L 160M
						3	3				
0.06	4300	29500	7	20018	✓						
0.08	4300	29500	7	17080	✓	✓					
0.09	4300	29500	7	14936	✓	✓	✓				
0.1	4300	29500	7	12829	✓	✓	✓				
0.12	4300	29500	7	11256	✓	✓	✓	✓			

R107R77, n_e = 1400 min^{-1} — **4300 Nm**

n_a min^{-1}	M_{amax} Nm	F_{Ra} N	$\varphi_{(/R)}$	i	DRN 63M 63MS 71M 71MS 80MK 80MS	DRN 80M 90S	DRN 90L	DRN 100L 100LM 100LS	DRN 112M	DRN 132M 132S	DRN 132L 160L 160M
0.14	4300	29500	7	9547	✓	✓	✓	✓	✓		
0.16	4300	29500	7	8618	✓	✓	✓	✓	✓		
0.18	4300	29500	7	7583	✓	✓	✓	✓	✓	✓	
0.2	4300	29500	7	6743	✓	✓	✓	✓	✓	✓	
0.23	4300	29500	7	5914	✓	✓	✓	✓	✓		
0.27	4300	29500	7	5168	✓	✓	✓	✓	✓	✓	
0.31	4300	29500	7	4435	✓	✓	✓	✓	✓	✓	
0.35	4300	29500	8	3896	✓	✓	✓	✓	✓	✓	
0.4	4300	29500	7	3432	✓	✓	✓	✓	✓	✓	✓
0.46	4300	29500	8	3039	✓	✓	✓	✓	✓		
0.52	4300	29500	7	2688	✓	✓	✓	✓	✓	✓	✓
0.59	4300	29500	7	2339		✓	✓	✓	✓	✓	✓
						2	3				
0.35	4300	29500	8	3918	✓						
0.41	4300	29500	8	3343	✓	✓					
0.46	4300	29500	8	3034	✓	✓					
0.52	4300	29500	8	2653	✓	✓	✓				
0.61	4300	29500	8	2280	✓	✓	✓				
0.67	4300	29500	8	2067	✓	✓	✓	✓	✓		
0.82	4300	29500	8	1693	✓	✓	✓	✓	✓		
0.9	4300	29500	8	1550	✓	✓	✓	✓	✓	✓	
0.99	4300	29500	8	1407	✓	✓	✓	✓	✓	✓	
1.1	4300	29500	8	1209	✓	✓	✓	✓	✓	✓	
1.3	4300	29500	8	1055	✓	✓	✓	✓	✓	✓	
1.5	4300	29500	8	919	✓	✓	✓	✓	✓	✓	
1.7	4300	29500	8	815	✓	✓	✓	✓	✓		
1.9	4300	29500	8	717	✓	✓	✓	✓	✓	✓	
2.2	4300	29500	8	626	✓	✓	✓	✓	✓	✓	
2.6	4300	29500	8	528	✓	✓	✓	✓	✓	✓	✓
						3	2				
0.7	4300	29500	7	1987	✓	✓	✓	✓	✓		
0.76	4300	29500	7	1827	✓	✓	✓	✓	✓	✓	
0.87	4300	29500	7	1599	✓	✓	✓	✓	✓	✓	
1	4300	29500	7	1400	✓	✓	✓	✓	✓	✓	
1.1	4300	29500	7	1226	✓	✓	✓	✓	✓	✓	
1.2	4300	29500	7	1104	✓	✓	✓	✓	✓	✓	✓
1.4	4300	29500	8	939	✓	✓	✓	✓	✓	✓	
1.7	4300	29500	8	822	✓	✓	✓	✓	✓	✓	
2.2	4300	29500	7	614		✓	✓	✓	✓	✓	✓
2.5	4300	29500	7	544		✓	✓	✓	✓	✓	✓
2.8	4300	29500	7	492		✓	✓	✓	✓	✓	✓
3.3	4300	29500	7	417		✓	✓	✓	✓	✓	✓
3.7	4300	29500	8	369	✓	✓	✓	✓	✓	✓	✓
4.3	4300	29500	8	323	✓	✓	✓	✓	✓	✓	✓
4.9	4300	29500	8	285		✓	✓	✓	✓	✓	✓
5.5	4300	29500	8	253		✓	✓	✓	✓	✓	✓
6.5	4300	29500	8	214		✓	✓	✓	✓	✓	✓
7.4	4300	29500	8	187		✓	✓	✓	✓	✓	✓
						2	2				

R107R77, n_e = 1400 min^{-1} — **4300 Nm**

n_a min^{-1}	M_{amax} Nm	F_{Ra} N	$\varphi_{(/R)}$	i	DRN 63M 63MS 71M 71MS 80MK 80MS	DRN 80M 90S	DRN 90L	DRN 100L 100LM 100LS	DRN 112M	DRN 132M 132S	DRN 132L 160L 160M
2.9	4300	29500	8	469	✓	✓	✓	✓	✓		
3.2	4300	29500	8	426	✓	✓	✓	✓	✓		
3.7	4300	29500	8	377	✓	✓	✓	✓	✓	✓	
4.3	4300	29500	8	325	✓	✓	✓	✓	✓	✓	
4.9	4300	29500	8	284	✓	✓	✓	✓	✓	✓	
5.4	4300	29500	8	256	✓	✓	✓	✓	✓	✓	✓
6.3	4300	29500	8	220	✓	✓	✓	✓	✓	✓	✓
7.2	4300	29500	8	193		✓	✓	✓	✓	✓	✓
8.1	4300	29500	8	172	✓	✓	✓	✓	✓	✓	

R127, n_e = 1400 min^{-1} — **6000 Nm**

n_a min^{-1}	M_{amax} Nm	F_{Ra} N	$\varphi_{(/R)}$	i	DRN 100L 100LM 100LS	DRN 112M	DRN 132M 132S	DRN 132L 160L 160M	DRN 180L 180M	DRN 200L 225M 225S	DRN 250M
					 3						
5.3	6000	43000	6	262.65	✓	✓					
5.8	6000	43000	6	240.48	✓	✓					
6.5	6000	43000	6	212.46	✓	✓	✓				
7.7	6000	43000	6	180.23	✓	✓	✓				
8.4	6000	43000	6	165.95	✓	✓	✓	✓			
9.4	6000	43000	6	148.33	✓	✓	✓	✓			
10	6000	43000	6	133.53	✓	✓	✓	✓	✓		
11	6000	43000	6	120.92	✓	✓	✓	✓	✓		
13	6000	43000	6	107.23	✓	✓	✓	✓	✓	✓	
14	6000	43000	6	96.95	✓	✓	✓	✓	✓	✓	
16	6000	43000	7	85.26	✓	✓	✓	✓			
17	6000	43000	6	82.17	✓	✓	✓	✓	✓	✓	
18	6000	43000	7	76.21	✓	✓	✓	✓			
20	6000	43000	7	68.61*	✓	✓	✓	✓	✓		
22	6000	43000	7	62.13	✓	✓	✓	✓	✓		
25	6000	43000	7	55.09	✓	✓	✓	✓	✓	✓	
28	6000	43000	7	49.81	✓	✓	✓	✓	✓	✓	
33	6000	43000	7	42.22*	✓	✓	✓	✓	✓	✓	✓
37	5730	43000	7	36.88			✓	✓	✓	✓	✓
45	5380	43000	7	30.84			✓	✓	✓	✓	✓
					 2						
43	6000	43000	6	32.18	✓	✓	✓	✓			
48	6000	43000	6	28.84	✓	✓	✓	✓			
53	6000	43000	6	26.04*	✓	✓	✓	✓	✓		
59	6000	43000	6	23.65	✓	✓	✓	✓	✓		
66	6000	43000	6	20.98	✓	✓	✓	✓	✓	✓	
73	6000	43000	6	19.04	✓	✓	✓	✓	✓	✓	
85	6000	43000	6	16.37*	✓	✓	✓	✓	✓	✓	✓
97	6000	43000	6	14.29			✓	✓	✓	✓	✓
115	5940	43000	6	12.12			✓	✓	✓	✓	✓
132	5700	43000	6	10.59			✓	✓	✓	✓	✓
156	5420	41400	7	8.96				✓	✓	✓	✓
158	3930	43000	8	8.85			✓	✓	✓	✓	✓

R127, n_e = 1400 min^{-1} — **6000 Nm**

n_a min^{-1}	M_{amax} Nm	F_{Ra} N	$\varphi_{(/R)}$	i	DRN 100L 100LM 100LS	DRN 112M	DRN 132M 132S	DRN 132L 160L 160M	DRN 180L 180M	DRN 200L 225M 225S	DRN 250M
186	3930	42400	8	7.51			✓	✓	✓	✓	✓
213	3930	40200	8	6.56			✓	✓	✓	✓	✓
252	3930	37600	8	5.55				✓	✓	✓	✓

R127R77, n_e = 1400 min^{-1} — **6000 Nm**

n_a min^{-1}	M_{amax} Nm	F_{Ra} N	$\varphi_{(/R)}$	i	DRN 63M 63MS 71M 71MS 80MK 80MS	DRN 80M 90S	DRN 90L	DRN 100L 100LM 100LS	DRN 112M	DRN 132M 132S	DRN 132L 160L 160M
						3	3				
0.06	6000	43000	6	20936	✓						
0.07	6000	43000	6	17863	✓	✓					
0.08	6000	43000	6	15620	✓	✓	✓				
0.09	6000	43000	6	14123	✓	✓	✓				
0.1	6000	43000	6	13417	✓	✓	✓				
0.11	6000	43000	6	11772	✓	✓	✓	✓			
0.14	6000	43000	6	9985	✓	✓	✓	✓	✓		
0.15	6000	43000	6	9013	✓	✓	✓	✓	✓		
0.15	6000	43000	6	8771	✓	✓	✓	✓	✓	✓	
0.16	6000	43000	6	8282	✓	✓	✓	✓	✓	✓	
0.18	6000	43000	6	7639	✓	✓	✓	✓	✓		
0.19	6000	43000	6	7053	✓	✓	✓	✓	✓	✓	
0.2	6000	43000	6	6722	✓	✓	✓	✓	✓	✓	
0.22	6000	43000	6	6347	✓	✓	✓	✓	✓	✓	
0.22	6000	43000	6	6185	✓	✓	✓	✓	✓		
0.25	6000	43000	6	5592	✓	✓	✓	✓	✓		
0.29	6000	43000	6	4740	✓	✓	✓	✓	✓		
0.31	6000	43000	6	4441	✓	✓	✓	✓	✓	✓	
0.35	6000	43000	6	3949	✓	✓	✓	✓	✓	✓	
0.37	6000	43000	6	3764	✓	✓	✓	✓	✓	✓	
0.39	6000	43000	6	3571	✓	✓	✓	✓	✓	✓	
0.45	6000	43000	6	3110	✓	✓	✓	✓	✓	✓	✓
0.49	6000	43000	6	2812	✓	✓	✓	✓	✓	✓	✓
0.58	6000	43000	6	2383	✓	✓	✓	✓	✓	✓	✓
0.72	6000	43000	7	1934	✓	✓	✓	✓	✓	✓	
0.76	6000	43000	7	1835	✓	✓	✓	✓	✓	✓	
0.9	6000	43000	7	1555	✓	✓	✓	✓	✓	✓	
0.96	6000	43000	7	1444	✓	✓	✓	✓	✓	✓	✓
1.1	6000	43000	7	1224	✓	✓	✓	✓	✓	✓	✓
						2	3				
0.4	6000	43000	7	3495	✓	✓					
0.45	6000	43000	7	3056	✓	✓	✓				
0.48	6000	43000	7	2903	✓	✓	✓				
0.54	6000	43000	7	2547	✓	✓	✓	✓			
0.64	6000	43000	7	2161	✓	✓	✓	✓	✓		
0.71	6000	43000	7	1951	✓	✓	✓	✓	✓		
0.81	6000	43000	7	1716	✓	✓	✓	✓	✓	✓	
0.86	6000	43000	7	1620	✓	✓	✓	✓	✓	✓	
1	6000	43000	7	1380	✓	✓	✓	✓	✓	✓	

R127R77, n_e = 1400 min^{-1}											6000 Nm
n_a min^{-1}	M_{amax} Nm	F_{Ra} N	$\varphi_{(/R)}$	i	DRN 63M 63MS 71M 71MS 80MK 80MS	DRN 80M 90S	DRN 90L	DRN 100L 100LM 100LS	DRN 112M	DRN 132M 132S	DRN 132L 160L 160M
1.1	6000	43000	7	1210	✓	✓	✓	✓	✓		
1.4	6000	43000	7	961	✓	✓	✓	✓	✓	✓	
1.8	6000	43000	7	773	✓	✓	✓	✓	✓	✓	
2.3	6000	43000	7	608	✓	✓	✓	✓	✓	✓	✓
						3 2					
0.55	6000	43000	6	2506	✓	✓	✓	✓	✓		
0.61	6000	43000	6	2266	✓	✓	✓	✓	✓		
0.69	6000	43000	6	2016	✓	✓	✓	✓	✓	✓	
0.72	6000	43000	6	1920	✓	✓	✓	✓	✓		
0.76	6000	43000	6	1823	✓	✓	✓	✓	✓	✓	
0.83	6000	43000	6	1673	✓	✓	✓	✓	✓	✓	
0.9	6000	43000	6	1545	✓	✓	✓	✓	✓	✓	
0.92	6000	43000	6	1512	✓	✓	✓	✓	✓	✓	
1	6000	43000	6	1322	✓	✓	✓	✓	✓	✓	✓
1	6000	43000	6	1282	✓	✓	✓	✓	✓	✓	
1.1	6000	43000	6	1195	✓	✓	✓	✓	✓	✓	✓
1.2	6000	43000	7	1164	✓	✓	✓	✓	✓		
1.3	6000	43000	6	1034		✓	✓	✓	✓	✓	✓
1.3	6000	43000	6	1013	✓	✓	✓	✓	✓	✓	✓
1.4	6000	43000	7	987	✓	✓	✓	✓	✓		
1.4	6000	43000	7	936	✓	✓	✓	✓	✓	✓	
1.4	6000	43000	6	935		✓	✓	✓	✓	✓	✓
1.6	6000	43000	6	830	✓	✓	✓	✓	✓	✓	✓
1.7	6000	43000	7	794	✓	✓	✓	✓	✓	✓	
1.7	6000	43000	6	792		✓	✓	✓	✓	✓	✓
1.8	6000	43000	7	777	✓	✓	✓	✓	✓	✓	
1.8	6000	43000	6	750	✓	✓	✓	✓	✓	✓	✓
2.1	6000	43000	7	659	✓	✓	✓	✓	✓	✓	
2.1	6000	43000	6	642		✓	✓	✓	✓	✓	✓
2.2	6000	43000	6	636	✓	✓	✓	✓	✓	✓	✓
2.2	6000	43000	7	614	✓	✓	✓	✓	✓	✓	✓
2.4	6000	43000	6	581		✓	✓	✓	✓	✓	✓
2.6	6000	43000	7	521	✓	✓	✓	✓	✓	✓	✓
2.8	6000	43000	6	492		✓	✓	✓	✓	✓	✓
2.9	6000	43000	7	480		✓	✓	✓	✓	✓	✓
3.4	6000	43000	7	407		✓	✓	✓	✓	✓	✓
3.6	6000	43000	7	386	✓	✓	✓	✓	✓	✓	✓
4.6	6000	43000	7	298		✓	✓	✓	✓	✓	✓
5.5	6000	43000	7	253		✓	✓	✓	✓	✓	✓
						2 2					
2.8	6000	43000	7	490	✓	✓	✓	✓	✓		
3.5	6000	43000	7	394	✓	✓	✓	✓	✓	✓	
4.2	6000	43000	7	327	✓	✓	✓	✓	✓	✓	
5.4	6000	43000	7	259	✓	✓	✓	✓	✓	✓	✓
6.9	6000	43000	7	202		✓	✓	✓	✓	✓	✓
8.6	6000	43000	7	162	✓	✓	✓	✓	✓	✓	✓
11	6000	43000	7	126		✓	✓	✓	✓	✓	✓

R137, n_e = 1400 min^{-1} — **8000 Nm**

n_a min^{-1}	M_{amax} Nm	F_{Ra} N	$\varphi_{(/R)}$	i	DRN 132M 132S	DRN 132L 160L 160M	DRN 180L 180M	DRN 200L 225M 225S	DRN 250M 280M 280S
						3			
6.2	8000	53400	6	222.60*	✓				
7.4	8000	53400	6	188.45	✓				
8	8000	53400	6	174.40*	✓	✓			
8.9	8000	53400	6	156.31	✓	✓			
9.9	8000	53400	6	141.12*	✓	✓	✓		
10	8000	53400	6	128.18	✓	✓	✓		
12	8000	53400	6	113.72	✓	✓	✓	✓	
13	8000	53400	6	103.20*	✓	✓	✓	✓	
15	8000	53400	6	88.70*	✓	✓	✓	✓	✓
17	8000	53400	6	80.91*	✓	✓	✓		
19	8000	53400	6	73.49	✓	✓	✓		
21	8000	53400	6	65.20	✓	✓	✓	✓	
23	8000	53400	6	59.17*	✓	✓	✓	✓	
27	8000	53400	6	50.86*	✓	✓	✓	✓	✓
31	8000	53400	6	44.39	✓	✓	✓	✓	✓
37	8000	53400	6	37.65	✓	✓	✓	✓	✓
42	8000	53400	6	32.91	✓	✓	✓	✓	✓
50	7680	54100	7	27.83		✓	✓	✓	✓
						2			
47	7780	53900	6	29.57*	✓	✓	✓		
58	8000	49400	6	24.12	✓	✓	✓	✓	
63	8000	47100	6	22.00*	✓	✓	✓	✓	
73	8000	43500	6	19.04*	✓	✓	✓	✓	✓
83	8000	40600	6	16.80*	✓	✓	✓	✓	✓
96	8000	37300	6	14.51	✓	✓	✓	✓	✓
109	8000	34700	6	12.83	✓	✓	✓	✓	✓
129	8000	31100	6	10.79		✓	✓	✓	✓
160	7840	27600	6	8.71			✓	✓	✓
184	5110	39000	8	7.59	✓	✓	✓	✓	✓
219	5110	35900	8	6.38		✓	✓	✓	✓
271	4600	34500	8	5.15			✓	✓	✓

R137R77, n_e = 1400 min^{-1} — **8000 Nm**

n_a min^{-1}	M_{amax} Nm	F_{Ra} N	$\varphi_{(/R)}$	i	DRN 63M 63MS 71M 71MS 80MK 80MS	DRN 80M 90S	DRN 90L	DRN 100L 100LM 100LS	DRN 112M	DRN 132M 132S	DRN 132L 160L 160M
						3	3				
0.06	8000	53400	6	22203	✓						
0.07	8000	53400	6	18945	✓	✓					
0.08	8000	53400	6	16566	✓	✓	✓				
0.09	8000	53400	6	14777	✓	✓					
0.1	8000	53400	6	12921	✓	✓	✓				
0.11	8000	53400	6	11712	✓	✓	✓	✓	✓		
0.13	8000	53400	6	10573	✓	✓	✓	✓	✓		
0.15	8000	53400	6	8784	✓	✓	✓	✓	✓	✓	
0.18	8000	53400	6	7479	✓	✓	✓	✓	✓	✓	

R137R77, n_e = 1400 min^{-1} — **8000 Nm**

n_a min^{-1}	M_{amax} Nm	F_{Ra} N	$\varphi_{(/R)}$	i	DRN 63M 63MS 71M 71MS 80MK 80MS	DRN 80M 90S	DRN 90L	DRN 100L 100LM 100LS	DRN 112M	DRN 132M 132S	DRN 132L 160L 160M
0.21	8000	53400	6	6559	✓	✓	✓	✓	✓		
0.23	8000	53400	6	5834	✓	✓	✓	✓	✓	✓	
0.27	8000	53400	6	5116	✓	✓	✓	✓	✓		
0.31	8000	53400	6	4464	✓	✓	✓	✓	✓	✓	
0.35	8000	53400	7	3928	✓	✓	✓	✓	✓	✓	
0.4	8000	53400	6	3454	✓	✓	✓	✓	✓	✓	✓
0.46	8000	53400	6	2993	✓	✓	✓	✓	✓	✓	✓
						2 3					
0.29	8000	53400	6	4709	✓						
0.34	8000	53400	6	4018	✓	✓					
0.39	8000	53400	6	3514	✓	✓	✓				
0.41	8000	53400	6	3338	✓	✓	✓				
0.47	8000	53400	6	2929	✓	✓	✓	✓			
0.56	8000	53400	6	2484	✓	✓	✓	✓	✓		
0.62	8000	53400	6	2242	✓	✓	✓	✓	✓		
0.75	8000	53400	6	1863	✓	✓	✓	✓	✓	✓	
0.88	8000	53400	6	1586	✓	✓	✓	✓	✓	✓	
1	8000	53400	6	1391	✓	✓	✓	✓	✓		
1.1	8000	53400	6	1256	✓	✓	✓	✓	✓		
1.2	8000	53400	6	1105	✓	✓	✓	✓	✓	✓	
1.3	8000	53400	6	1043	✓	✓	✓	✓	✓	✓	
1.5	8000	53400	6	888	✓	✓	✓	✓	✓	✓	
2	8000	53400	6	699	✓	✓	✓	✓	✓	✓	✓
2.2	8000	53400	6	609		✓	✓	✓	✓	✓	✓
						3 2					
0.52	8000	53400	6	2658	✓	✓	✓	✓	✓		
0.58	8000	53400	6	2412	✓	✓	✓	✓	✓		
0.67	8000	53400	6	2073	✓	✓	✓	✓	✓		
0.76	8000	53400	6	1839	✓	✓	✓	✓	✓	✓	
0.87	8000	53400	6	1598	✓	✓	✓	✓	✓	✓	✓
1	8000	53400	7	1397	✓	✓	✓	✓	✓		
1.1	8000	53400	7	1226	✓	✓	✓	✓	✓	✓	
1.2	8000	53400	7	1090	✓	✓	✓	✓	✓		
1.4	8000	53400	7	951	✓	✓	✓	✓	✓		
1.6	8000	53400	7	831	✓	✓	✓	✓	✓	✓	✓
1.9	8000	53400	7	730	✓	✓	✓	✓	✓	✓	✓
2.2	8000	53400	7	629		✓	✓	✓	✓	✓	✓
2.5	8000	53400	7	560	✓	✓	✓	✓	✓	✓	
2.8	8000	53400	7	490		✓	✓	✓	✓	✓	✓
3.2	8000	53400	7	428		✓	✓	✓	✓	✓	✓
3.6	8000	53400	7	381	✓	✓	✓	✓	✓	✓	
4.3	8000	53400	7	323	✓	✓	✓	✓	✓	✓	
4.8	8000	53400	7	291	✓	✓	✓	✓	✓	✓	✓
5.4	8000	53400	7	255	✓	✓	✓	✓	✓	✓	✓
6.2	8000	53400	7	223	✓	✓	✓	✓	✓	✓	✓
7.1	8000	53400	7	197		✓	✓	✓	✓	✓	✓
8	8000	53400	7	175		✓	✓	✓	✓	✓	✓
						2 2					
2.4	8000	53400	6	564	✓	✓	✓	✓	✓		

R137R77, n_e = 1400 min^{-1} — **8000 Nm**

n_a min^{-1}	M_{amax} Nm	F_{Ra} N	$\varphi_{(/R)}$	i	DRN 63M 63MS 71M 71MS 80MK 80MS	DRN 80M 90S	DRN 90L	DRN 100L 100LM 100LS	DRN 112M	DRN 132M 132S	DRN 132L 160L 160M
2.7	8000	53400	6	517	✓	✓	✓	✓	✓		
3	8000	53400	6	453	✓	✓	✓	✓	✓	✓	
3.7	8000	53400	6	376	✓	✓	✓	✓	✓	✓	
4.1	8000	53400	6	339	✓	✓	✓	✓	✓	✓	✓
4.7	8000	53400	6	297	✓	✓	✓	✓	✓	✓	✓

R147, n_e = 1400 min^{-1} — **13000 Nm**

n_a min^{-1}	M_{amax} Nm	F_{Ra} N	$\varphi_{(/R)}$	i	DRN 132L 160L 160M	DRN 180L 180M	DRN 200L 225M 225S	DRN 250M 280M 280S
					 3			
8.5	13000	62700	5	163.31	✓			
9.5	13000	62700	5	146.91	✓	✓		
11	13000	62700	5	119.86	✓	✓	✓	
12	13000	62700	5	109.31	✓	✓	✓	
14	13000	62700	6	94.60*	✓	✓	✓	✓
16	13000	62700	6	83.47	✓	✓	✓	✓
19	13000	62700	6	72.09	✓	✓	✓	✓
20	13000	62700	6	66.99	✓	✓	✓	
22	13000	62700	6	61.09	✓	✓	✓	
26	13000	62700	6	52.87	✓	✓	✓	✓
30	13000	62700	6	46.65	✓	✓	✓	✓
34	13000	62700	6	40.29	✓	✓	✓	✓
39	13000	62700	6	35.64	✓	✓	✓	✓
46	13000	62700	6	29.95	✓	✓	✓	✓
57	11900	64700	6	24.19		✓	✓	✓
					 2			
68	12000	64600	5	20.44	✓	✓	✓	✓
77	10500	67000	5	18.04	✓	✓	✓	✓
89	13000	62700	5	15.64	✓	✓	✓	✓
100	12600	63400	5	13.91	✓	✓	✓	✓
116	13000	60400	5	11.99	✓	✓	✓	✓
143	13000	54400	6	9.74		✓	✓	✓
169	13000	49900	6	8.26			✓	✓
193	8670	58400	8	7.25	✓	✓	✓	✓
237	8670	53200	8	5.89		✓	✓	✓
280	8670	49300	8	5.00			✓	✓

R147R77, n_e = 1400 min^{-1} — **13000 Nm**

n_a min^{-1}	M_{amax} Nm	F_{Ra} N	$\varphi_{(/R)}$	i	DRN 63M 63MS 71M 71MS 80MK 80MS	DRN 80M 90S	DRN 90L	DRN 100L 100LM 100LS	DRN 112M	DRN 132M 132S	DRN 132L 160L 160M
					3	3					
0.05	13000	62700	6	23401	✓						
0.06	13000	62700	6	21342	✓						
0.07	13000	62700	6	18210	✓	✓					
0.08	13000	62700	6	15923	✓	✓	✓				
0.09	13000	62700	6	14075	✓						
0.11	13000	62700	6	12344	✓	✓	✓	✓	✓		
0.12	13000	62700	6	11143	✓	✓	✓	✓	✓		
0.14	13000	62700	6	9743	✓	✓	✓	✓	✓		
0.16	13000	62700	6	8443	✓	✓	✓	✓	✓	✓	
0.19	13000	62700	6	7307	✓	✓	✓	✓	✓	✓	
0.21	13000	62700	6	6447	✓	✓	✓	✓	✓	✓	
0.25	13000	62700	6	5568	✓	✓	✓	✓	✓	✓	
0.28	13000	62700	6	4926	✓	✓	✓	✓	✓		
0.32	13000	62700	6	4325	✓	✓	✓	✓	✓	✓	
0.37	13000	62700	6	3754	✓	✓	✓	✓	✓		
0.42	13000	62700	6	3302	✓	✓	✓	✓	✓	✓	
0.48	13000	62700	6	2898	✓	✓	✓	✓	✓	✓	
					3	2					
0.54	13000	62700	6	2555	✓	✓	✓	✓	✓		
0.63	13000	62700	6	2211	✓	✓	✓	✓	✓		
0.71	13000	62700	6	1951	✓	✓	✓	✓	✓		
0.82	13000	62700	6	1705	✓	✓	✓	✓	✓	✓	
0.91	13000	62700	6	1536	✓	✓	✓	✓	✓	✓	✓
1	13000	62700	6	1329	✓	✓	✓	✓	✓	✓	✓
1.2	13000	62700	6	1166	✓	✓	✓	✓	✓	✓	✓
1.3	13000	62700	6	1029		✓	✓	✓	✓	✓	✓
1.5	13000	62700	6	889	✓	✓	✓	✓	✓	✓	✓
1.7	13000	62700	6	784		✓	✓	✓	✓	✓	✓
2	13000	62700	6	695		✓	✓	✓	✓	✓	✓
2.2	13000	62700	6	619	✓	✓	✓	✓	✓	✓	
2.5	13000	62700	6	558	✓	✓	✓	✓	✓	✓	✓
2.8	13000	62700	6	489	✓	✓	✓	✓	✓	✓	✓
3.3	13000	62700	6	415	✓	✓	✓	✓	✓	✓	✓

R147R87, n_e = 1400 min^{-1} — **13000 Nm**

n_a min^{-1}	M_{amax} Nm	F_{Ra} N	$\varphi_{(/R)}$	i	DRN 80M 90S	DRN 90L	DRN 100L 100LM 100LS	DRN 112M	DRN 132M 132S	DRN 132L 160L 160M	DRN 180L 180M	DRN 200L
					3		2					
2.6	13000	62700	6	533			✓	✓	✓	✓	✓	✓
3	13000	62700	6	462			✓	✓	✓	✓	✓	✓
3.2	13000	62700	6	426	✓	✓	✓	✓	✓	✓	✓	
3.8	13000	62700	6	368	✓	✓	✓	✓	✓	✓	✓	
4.2	13000	62700	6	326	✓	✓	✓	✓	✓	✓	✓	
5	13000	62700	6	280			✓	✓	✓	✓	✓	✓
5.6	13000	62700	6	247			✓	✓	✓	✓	✓	✓
6.5	13000	62700	6	214			✓	✓	✓	✓	✓	✓

R147R87, n_e = 1400 min^{-1} — **13000 Nm**

n_a min^{-1}	M_{amax} Nm	F_{Ra} N	$\varphi_{(/R)}$	i	DRN 80M 90S	DRN 90L	DRN 100L 100LM 100LS	DRN 112M	DRN 132M 132S	DRN 132L 160L 160M	DRN 180L 180M	DRN 200L
7.4	13000	62700	6	189			✓	✓	✓	✓	✓	✓
8.8	13000	62700	6	159			✓	✓	✓	✓	✓	✓

R167, n_e = 1400 min^{-1} — **20000 Nm**

n_a min^{-1}	M_{amax} Nm	F_{Ra} N	$\varphi_{(/R)}$	i	DRN 132L 160L 160M	DRN 180L 180M	DRN 200L 225M 225S	DRN 250M 280M 280S	DRN 315M 315S	DRN 315H 315L
						3				
6	20000	120000	5	229.71	✓					
7.4	20000	120000	5	186.93*	✓	✓				
9.1	20000	120000	5	153.07	✓	✓	✓			
10	20000	120000	5	139.98	✓	✓	✓			
11	20000	120000	5	121.81*	✓	✓	✓	✓		
13	20000	120000	5	107.49	✓	✓	✓	✓		
15	20000	120000	5	93.19	✓	✓	✓	✓	✓	
16	20000	120000	5	82.91*	✓	✓	✓	✓	✓	
18	20000	120000	6	73.70*	✓	✓	✓			
20	20000	120000	6	67.40	✓	✓	✓			
23	20000	120000	6	58.65	✓	✓	✓	✓		
27	20000	120000	6	51.76	✓	✓	✓	✓		
31	20000	120000	6	44.87	✓	✓	✓	✓	✓	
35	20000	120000	6	39.92	✓	✓	✓	✓	✓	
40	20000	120000	6	34.41	✓	✓	✓	✓	✓	✓
50	20000	119500	6	27.96		✓	✓	✓	✓	✓
59	18800	114400	6	23.71			✓	✓	✓	✓
						2				
30	9460	120000	5	46.00	✓					
37	10200	120000	5	37.74	✓	✓				
45	11700	120000	5	30.71	✓	✓	✓			
56	16400	120000	5	24.57	✓	✓	✓	✓		
64	20000	107100	5	21.85	✓	✓	✓	✓		
73	20000	100600	5	19.03	✓	✓	✓	✓	✓	
82	20000	95400	5	16.98	✓	✓	✓	✓	✓	
96	19700	89300	5	14.48	✓	✓	✓	✓	✓	✓
116	19000	83300	5	11.99		✓	✓	✓	✓	✓
136	18500	77500	5	10.24			✓	✓	✓	✓

R167R97, n_e = 1400 min^{-1} — **20000 Nm**

n_a min^{-1}	M_{amax} Nm	F_{Ra} N	$\varphi_{(/R)}$	i	DRN 71M 71MS 80MK 80MS	DRN 80M 90S	DRN 90L	DRN 100L 100LM 100LS	DRN 112M	DRN 132M 132S	DRN 132L 160L 160M	DRN 180L 180M	DRN 200L 225S
							3 3						
0.05	20000	120000	5	27001	✓	✓							
0.06	20000	120000	5	22482	✓	✓	✓						
0.06	20000	120000	5	20002	✓	✓	✓						
0.08	20000	120000	5	17361	✓	✓	✓	✓	✓				
0.09	20000	120000	5	15446	✓	✓	✓	✓	✓				

R167R97, n_e = 1400 min^{-1} — **20000 Nm**

n_a min^{-1}	M_{amax} Nm	F_{Ra} N	$\varphi_{(/R)}$	i	DRN 71M 71MS 80MK 80MS	DRN 80M 90S	DRN 90L	DRN 100L 100LM 100LS	DRN 112M	DRN 132M 132S	DRN 132L 160L 160M	DRN 180L 180M	DRN 200L 225S
0.09	20000	120000	5	14051	✓	✓	✓	✓	✓	✓			
0.11	20000	120000	5	11812	✓	✓	✓	✓	✓	✓			
0.13	20000	120000	5	10509	✓	✓	✓	✓	✓	✓			
0.14	20000	120000	6	9631	✓	✓	✓						
0.18	20000	120000	5	7749		✓	✓	✓	✓	✓	✓	✓	
0.2	20000	120000	5	6894		✓	✓	✓	✓	✓	✓	✓	
0.23	20000	120000	5	6077	✓	✓	✓	✓	✓	✓			
0.25	20000	120000	5	5407	✓	✓	✓	✓	✓	✓			
0.3	20000	120000	6	4650	✓	✓	✓	✓	✓	✓	✓		
0.33	20000	120000	6	4129	✓	✓	✓	✓	✓	✓	✓		
0.37	20000	120000	6	3692		✓	✓	✓	✓	✓	✓	✓	
0.45	20000	120000	5	3099				✓	✓	✓	✓	✓	✓
						3		2					
0.52	20000	120000	5	2657	✓	✓	✓	✓	✓	✓			
0.6	20000	120000	5	2333	✓	✓	✓	✓	✓	✓	✓		
0.67	20000	120000	5	2085	✓	✓	✓	✓	✓	✓	✓		
0.74	20000	120000	5	1877		✓	✓	✓	✓	✓	✓	✓	
0.83	20000	120000	5	1670		✓	✓	✓	✓	✓	✓	✓	
0.97	20000	120000	6	1438	✓	✓	✓	✓	✓	✓			
1	20000	120000	6	1279	✓	✓	✓	✓	✓	✓			
1.2	20000	120000	6	1123	✓	✓	✓	✓	✓	✓	✓		
1.4	20000	120000	6	999	✓	✓	✓	✓	✓	✓	✓		
1.6	20000	120000	6	861	✓	✓	✓	✓	✓	✓	✓		
1.8	20000	120000	6	760	✓	✓	✓	✓	✓	✓			
2.1	20000	120000	6	656				✓	✓	✓	✓	✓	✓
2.4	20000	120000	5	579						✓	✓	✓	✓
2.7	20000	120000	6	503				✓	✓	✓	✓	✓	✓
3.2	20000	120000	6	432						✓	✓	✓	✓
3.7	20000	120000	6	376				✓	✓	✓	✓	✓	✓
4.1	20000	120000	6	335				✓	✓	✓	✓	✓	✓
4.6	20000	120000	6	303						✓	✓	✓	✓
5	20000	120000	6	279						✓	✓	✓	✓

R167R107, n_e = 1400 min^{-1} — **20000 Nm**

n_a min^{-1}	M_{amax} Nm	F_{Ra} N	$\varphi_{(/R)}$	i	DRN 100L 100LM 100LS	DRN 112M	DRN 132M 132S	DRN 132L 160L 160M	DRN 180L 180M	DRN 200L 225M 225S
					2	3				
0.38	20000	120000	6	3637	✓	✓				
0.42	20000	120000	6	3330	✓	✓				
0.5	20000	120000	6	2757	✓	✓				
0.57	20000	120000	6	2436	✓	✓	✓			
0.6	20000	120000	6	2298	✓	✓	✓	✓		
0.67	20000	120000	6	2066	✓	✓	✓			
0.75	20000	120000	6	1849	✓	✓	✓	✓	✓	
0.83	20000	120000	6	1674	✓	✓	✓	✓	✓	
0.94	20000	120000	6	1485	✓	✓	✓	✓	✓	✓
1	20000	120000	6	1342	✓	✓	✓	✓	✓	✓
1.1	20000	120000	6	1229	✓	✓	✓	✓	✓	✓

R167R107, n_e = 1400 min^{-1}										20000 Nm
n_a min^{-1}	M_{amax} Nm	F_{Ra} N	$\varphi_{(/R)}$	i	DRN 100L 100LM 100LS	DRN 112M	DRN 132M 132S	DRN 132L 160L 160M	DRN 180L 180M	DRN 200L 225M 225S
1.2	20000	120000	6	1111	✓	✓	✓	✓	✓	✓
1.4	20000	120000	6	950	✓	✓	✓	✓	✓	
1.6	20000	120000	6	860	✓	✓	✓	✓	✓	
1.8	20000	120000	6	763	✓	✓	✓	✓	✓	✓
2	20000	120000	6	690	✓	✓	✓	✓	✓	✓
2.3	20000	120000	6	585	✓	✓	✓	✓	✓	✓
2.7	20000	120000	6	511			✓	✓	✓	✓
						 3 2				
4	20000	120000	6	349			✓	✓	✓	✓
4.7	20000	120000	6	295				✓	✓	✓
5.1	20000	120000	6	270			✓	✓	✓	✓
6.1	20000	120000	6	229			✓	✓	✓	✓
7	20000	120000	6	200			✓	✓	✓	✓
8.2	20000	120000	6	169				✓	✓	✓
						 2 2				
3.1	20000	120000	6	446	✓	✓	✓	✓		
3.5	20000	120000	6	399	✓	✓	✓	✓		
3.8	20000	120000	6	361	✓	✓	✓	✓	✓	
4.2	20000	120000	6	328	✓	✓	✓	✓	✓	
4.8	20000	120000	6	291	✓	✓	✓	✓	✓	✓
5.3	20000	120000	6	264	✓	✓	✓	✓	✓	✓
6.1	20000	120000	6	227	✓	✓	✓	✓	✓	✓
7	20000	120000	6	198			✓	✓	✓	✓
8.3	20000	120000	6	168			✓	✓	✓	✓

4.2.2 Selection tables R..DRN.. in kW

P_N = 0.12 kW

n_a min^{-1}	M_a Nm	i	F_{Ra} N	SEW f_B	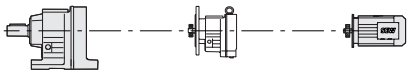			m kg
0.06	13300	21342	62000	1.00				
0.08	11400	18210	65700	1.15				
0.09	9930	15923	67900	1.30				
0.10	8780	14075	69400	1.50				
0.11	7650	12344	70700	1.70	**R147**			420
0.12	6740	11143	71600	1.95	**RF147**	**R77**	**DRN63MS4**	430
0.14	6040	9743	72200	2.2	**RM147**			600
0.16	4830	8443	73000	2.7				
0.19	4180	7307	73400	3.1				
0.21	3690	6447	73700	3.5				
0.25	3190	5568	73900	4.1				
0.11	8060	12921	53300	1.00				
0.12	7260	11712	54900	1.10				
0.13	6390	10573	56400	1.25	**R137**			290
0.16	5030	8784	58400	1.60	**RF137**	**R77**	**DRN63MS4**	310
0.18	4090	7479	59400	1.95	**RM137**			425
0.21	4060	6559	59400	1.95				
0.24	3190	5834	60200	2.5				
0.27	3170	5116	60200	2.5				
0.12	7340	11772	43000	0.80				
0.14	6190	9985	43000	0.95				
0.15	5450	9013	43000	1.10				
0.16	5110	8771	43000	1.20				
0.17	4740	8282	43000	1.25				
0.18	4620	7639	43000	1.30				
0.20	3860	7053	43000	1.55				
0.21	3910	6722	43000	1.55	**R127**			260
0.22	3630	6347	43000	1.65	**RF127**	**R77**	**DRN63MS4**	270
0.22	3830	6185	43000	1.55	**RM127**			365
0.25	3460	5592	43000	1.75				
0.29	2940	4740	43000	2.0				
0.31	2590	4441	43000	2.3				
0.35	2160	3949	43000	2.8				
0.37	2190	3764	43000	2.7				
0.39	1950	3571	43000	3.1				
0.44	1560	3110	43000	3.9				
0.39	2210	3495	43000	2.7				
0.45	1930	3056	43000	3.1	**R127**			245
0.48	1830	2903	43000	3.3	**RF127**	**R77**	**DRN63MS4**	265
0.54	1610	2547	43000	3.7	**RM127**			360
0.55	1570	2506	43000	3.8	**R127** **RF127** **RM127**	**R77**	**DRN63MS4**	260 270 365
0.18	4410	7583	28800	0.95				
0.20	3690	6743	32400	1.15				
0.23	3660	5914	32500	1.15	**R107**			200
0.27	2830	5168	35500	1.50	**RF107**	**R77**	**DRN63MS4**	210
0.31	2540	4435	36100	1.70	**RM107**			295
0.35	2270	3896	36500	1.90				
0.45	1880	3039	36900	2.3				

P_N = 0.12 kW

n_a min^{-1}	M_a Nm	i	F_{Ra} N	SEW f_B	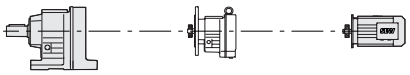			m kg
0.35	2470	3918	36200	1.75				
0.41	2110	3343	36700	2.0				
0.45	1910	3034	36900	2.3	**R107**			195
0.52	1670	2653	37100	2.6	**RF107**	**R77**	**DRN63MS4**	200
0.61	1440	2280	37300	3.0	**RM107**			290
0.67	1300	2067	37400	3.3				
0.30	3050	4559	17700	1.00	**R97**			130
0.34	2570	4004	18200	1.15	**RF97**	**R57**	**DRN63MS4**	145
0.40	2270	3481	21700	1.30	**RM97**			195
0.29	3240	4678	4840	0.95				
0.32	2980	4309	20400	1.00				
0.37	2560	3702	23700	1.15	**R97**			125
0.46	2080	3019	26100	1.45	**RF97**	**R57**	**DRN63MS4**	145
0.52	1810	2668	27100	1.65	**RM97**			195
0.61	1480	2245	27700	2.0				
0.68	1310	2016	27900	2.3				
0.80	1200	1733	28000	2.5				
0.45	2120	3065	23400	1.40				
0.51	1880	2722	26200	1.60				
0.60	1590	2311	27500	1.90				
0.66	1430	2078	27700	2.1	**R97**			130
0.76	1240	1823	28000	2.4	**RF97**	**R57**	**DRN63MS4**	145
0.87	1070	1583	28200	2.8	**RM97**			195
0.99	910	1396	28300	3.3				
1.1	775	1228	28400	3.9				
0.48	1770	2873	9380	0.90	**R87**			86
0.70	1300	1961	18500	1.20	**RF87**	**R57**	**DRN63MS4**	93
					RM87			125
0.53	1790	2595	15000	0.85				
0.65	1430	2129	17700	1.10	**R87**			85
0.72	1270	1930	18600	1.20	**RF87**	**R57**	**DRN63MS4**	92
0.80	1120	1733	19300	1.40	**RM87**			120
0.79	1150	1737	18400	1.35				
0.91	1010	1524	19800	1.55				
1.1	810	1303	20000	1.90	**R87**			85
1.2	710	1143	20000	2.2	**RF87**	**R57**	**DRN63MS4**	92
1.6	585	885	20000	2.7	**RM87**			120
1.8	515	776	20000	3.0				
2.0	450	685	20000	3.4				
2.3	360	599	20000	4.3				
1.1	940	1303	8660	0.85	**R77**			45
1.2	800	1124	10100	1.05	**RF77**	**R37**	**DRN63MS4**	51
1.3	740	1047	10600	1.10	**RM77**			76
1.5	640	915	11300	1.30				
1.1	820	1218	9910	1.00				
1.3	740	1084	10600	1.10	**R77**			46
1.5	665	940	11200	1.25	**RF77**	**R37**	**DRN63MS4**	52
1.7	525	821	12000	1.55	**RM77**			77
1.9	480	731	12200	1.70				
2.1	460	646	12300	1.80				
2.7	380	520	12600	2.2	**R77**			45
3.1	325	451	12700	2.5	**RF77**	**R37**	**DRN63MS4**	51
3.3	300	422	12800	2.7	**RM77**			76
3.8	255	365	12900	3.2				

P_N = 0.12 kW

n_a min^{-1}	M_a Nm	i	F_{Ra} N	SEW f_B	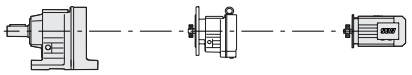			m kg
1.6	630	891	7190	0.95				
1.9	505	730	8530	1.20	**R67**			40
2.1	440	644	9060	1.35	**RF67**	**R37**	**DRN63MS4**	43
2.4	385	571	9430	1.55	**RM67**			59
2.8	320	486	9790	1.85				
1.7	590	836	7670	1.00				
1.8	495	750	8630	1.20				
2.1	440	646	9050	1.35	**R67**			41
2.4	400	574	9330	1.50	**RF67**	**R37**	**DRN63MS4**	44
2.8	345	495	9660	1.75	**RM67**			60
3.2	285	438	9940	2.1				
1.8	550	782	4650	0.80				
2.0	455	678	6980	1.00				
2.3	415	604	7260	1.10	**R57**			34
2.6	375	537	7400	1.20	**RF57**	**R37**	**DRN63MS4**	38
2.9	330	471	7550	1.35	**RM57**			50
3.9	245	357	7770	1.85				
4.3	215	319	7820	2.1				
3.8	260	359	7730	1.75				
4.3	235	324	7790	1.95				
4.8	205	290	7840	2.2	**R57**			33
5.3	185	262	7880	2.4	**RF57**	**R37**	**DRN63MS4**	37
5.6	171	246	7900	2.6	**RM57**			49
6.3	150	220	7930	3.0				
2.7	345	510	3910	0.85				
3.2	285	436	5300	1.05	**R47**			29
3.4	265	408	5590	1.10	**RF47**	**R37**	**DRN63MS4**	29
4.0	220	344	5790	1.35				
2.8	365	502	3020	0.80				
3.2	315	429	4680	0.95				
3.7	270	372	5580	1.10				
4.0	250	348	5670	1.20	**R47**			28
4.6	210	301	5810	1.40	**RF47**	**R37**	**DRN63MS4**	29
5.4	177	255	5930	1.70				
6.1	156	228	5980	1.95				
7.1	130	195	6040	2.3				
4.1	225	338	3490	0.90				
4.7	210	296	3900	0.95				
5.3	184	259	4690	1.10	**R37**			18
6.1	163	228	5300	1.25	**RF37**	**R17**	**DRN63MS4**	19
6.9	140	199	5550	1.40				
8.0	123	172	5680	1.65				
4.2	240	328	3160	0.85				
4.8	205	289	4100	1.00				
5.2	192	265	4450	1.05	**R37**			17
6.1	156	226	5410	1.30	**RF37**	**R17**	**DRN63MS4**	19
6.8	144	202	5520	1.40				
7.7	125	179	5660	1.60				
6.0	158	229	2790	0.80				
6.9	138	200	3320	0.95	**R27**			12
7.8	121	177	3770	1.05	**RF27**	**R17**	**DRN63MS4**	12
8.3	116	166	3900	1.10				
6.1	157	227	2830	0.85				
6.8	144	203	3170	0.90	**R27**			11
7.7	125	179	3660	1.05	**RF27**	**R17**	**DRN63MS4**	11
8.8	106	156	4020	1.25				

P_N = 0.12 kW

n_a min^{-1}	M_a Nm	i	F_{Ra} N	SEW f_B	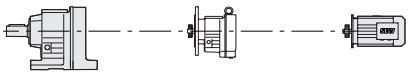			m kg
4.5	255	195.24*	12900	3.2	**R77**			38
5.2	220	166.59	13000	3.7	**RF77**	-	**DRN63M6**	44
6.0	192	145.67	13000	4.3	**RM77**			69
4.4	265	199.81	10000	2.3				
4.7	240	184.07	10100	2.5				31
5.5	210	158.14	10200	2.9	**R67**			
6.3	181	137.67	10300	3.3	**RF67**	-	**DRN63M6**	34
6.8	170	128.97	10300	3.5	**RM67**			50
7.6	150	113.94	10400	4.0				
6.9	166	199.81	10300	3.6	**R67**			30
7.5	153	184.07	10400	3.9	**RF67**	-	**DRN63MS4**	33
					RM67			49
4.7	245	186.89	7760	1.85				
5.1	225	172.17	7800	2.0				
5.9	195	147.92	7860	2.3	**R57**			24
6.8	170	128.77	7900	2.7	**RF57**	-	**DRN63M6**	27
7.2	159	120.63	7920	2.8	**RM57**			39
8.2	140	106.58	7940	3.2				
8.8	130	98.99	7950	3.5				
7.4	155	186.89	7920	2.9	**R57**			23
8.0	143	172.17	7940	3.2	**RF57**	-	**DRN63MS4**	27
9.3	123	147.92	7960	3.7	**RM57**			39
11	107	128.77	7980	4.2				
4.9	235	176.88	5730	1.30				
5.3	215	162.94	5800	1.40	**R47**	-	**DRN63M6**	19
6.2	184	139.99	5900	1.65	**RF47**			19
7.1	161	121.87	5970	1.85				
7.8	147	176.88	6000	2.0				
8.5	135	162.94	6030	2.2				
9.9	116	139.99	6070	2.6	**R47**			18
11	101	121.87	6100	3.0	**RF47**	-	**DRN63MS4**	18
12	95	114.17	6110	3.2				
14	84	100.86	6120	3.6				
15	78	93.68	6130	3.9				
6.5	178	134.82	4870	1.15				
7.0	163	123.66	5290	1.25				
8.3	139	105.28	5560	1.45	**R37**	-	**DRN63M6**	15
9.6	120	90.77	5700	1.65	**RF37**			17
10	111	84.61	5750	1.80				
12	97	73.96	5830	2.1				
10	112	134.82	5750	1.80				
11	103	123.66	5800	1.95				
13	87	105.28	5880	2.3	**R37**	-	**DRN63MS4**	14
15	75	90.77	5930	2.7	**RF37**			16
16	70	84.61	5950	2.9				
19	61	73.96	5980	3.3				
7.0	163	123.91	2660	0.80				
8.3	139	105.49	3300	0.95				
9.6	120	90.96	3800	1.10	**R27**	-	**DRN63M6**	9.3
10	112	84.78	3990	1.15	**RF27**			9.2
12	98	74.11	4060	1.35				

P_N = 0.12 kW

n_a min^{-1}	M_a Nm	i	F_{Ra} N	SEW f_B	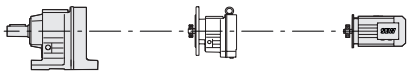			m kg
10	112	135.09	3990	1.15				
11	103	123.91	4040	1.25				
13	88	105.49	4110	1.50				
15	76	90.96	4170	1.70				
16	70	84.78	4200	1.85				
19	62	74.11	4240	2.1	**R27** **RF27**	-	**DRN63MS4**	8.5 8.4
20	58	69.47	4260	2.3				
23	51	61.30	4290	2.6				
25	46	55.87	4280	2.8				
29	40	48.17	4090	3.3				
31	37	44.90	4000	3.5				
12	93	70.39	1250	0.90				
13	86	65.61	1680	1.00				
15	76	57.35	2310	1.15	**R17** **RF17**	-	**DRN63M6**	8.9 8.8
16	71	53.76	2400	1.20				
18	62	47.44	2460	1.35				
17	68	81.64	2420	1.25				
20	58	70.39	2490	1.45				
21	54	65.61	2500	1.55				
24	48	57.35	2500	1.80				
26	45	53.76	2500	1.90				
29	39	47.44	2500	2.2	**R17**	-	**DRN63MS4**	8.1
31	37	44.18	2500	2.3	**RF17**			8.0
36	32	38.61	2430	2.7				
38	30	36.20	2390	2.8				
43	27	31.94	2310	3.2				
49	24	28.32	2230	3.6				
57	20	24.07	2130	4.3				
23	50	60.32	1250	1.00				
27	43	51.52	1300	1.15				
29	40	47.78	1330	1.25				
31	37	44.16	1350	1.35				
33	34	41.31	1370	1.45				
34	34	40.34	1370	1.50	**R07**	-	**DRN63MS4**	6.9
36	32	38.51	1380	1.55	**RF07**			6.9
41	28	34.05	1410	1.75				
47	24	29.08	1390	2.1				
51	22	26.97	1370	2.2				
59	19	23.32	1320	2.6				
63	18	21.73	1290	2.8				
75	15	18.31	1230	3.3				
83	14	16.73	1200	3.6				
98	12	14.12	1150	4.3				
114	10	12.06	1100	5.0				
123	9.3	11.18	1070	5.4				
143	8	9.67	1030	6.2				
153	7.5	9.01	1010	6.7				
176	6.5	7.85	970	7.5	**R07**	-	**DRN63MS4**	6.8
185	6.2	7.48	950	6.9	**RF07**			6.8
202	5.7	6.83	930	7.6				
239	4.8	5.76	880	8.4				
280	4.1	4.92	840	9.1				
302	3.8	4.57	820	9.5				
350	3.3	3.95	785	10				
375	3.1	3.68	765	10				
430	2.7	3.21	735	11				

P_N = 0.12 kW

n_a min^{-1}	M_a Nm	i	F_{Ra} N	SEW f_B	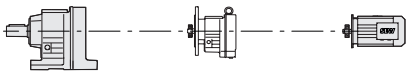			m kg
227	5	6.07	4270	8.5				
267	4.3	5.18	4050	17	**RX67**	-	**DRN63MS4**	16
305	3.8	4.53	3870	21	**RXF67**			20
321	3.6	4.30*	3810	22				
251	4.6	5.50*	3360	8.5				
272	4.2	5.07	3270	8.6				
317	3.6	4.35	3120	18				
364	3.2	3.79	2980	21				
389	3	3.55*	2910	23				
440	2.6	3.14	2800	24	**RX57**	-	**DRN63MS4**	14
474	2.4	2.91	2730	27	**RXF57**			16
523	2.2	2.64*	2640	31				
582	2	2.37	2550	35				
676	1.7	2.04	2430	40				
719	1.6	1.92*	2380	43				
835	1.4	1.65	2260	50				

P_N = 0.18 kW

n_a min^{-1}	M_a Nm	i	F_{Ra} N	SEW f_B	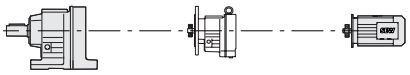			m kg
0.10	14300	14075	59000	0.90				
0.11	12500	12344	63700	1.05				
0.12	11100	11143	66100	1.15				
0.14	9840	9743	68000	1.30				
0.16	8130	8443	70200	1.60				
0.19	7040	7307	71300	1.85	**R147**			420
0.21	6210	6447	72000	2.1	**RF147**	**R77**	**DRN63M4**	430
0.25	5360	5568	72700	2.4	**RM147**			600
0.28	4900	4926	73000	2.7				
0.32	4210	4325	73400	3.1				
0.37	3740	3754	73700	3.5				
0.42	3210	3302	73900	4.1				
0.16	8460	8784	52000	0.95				
0.18	7020	7479	55300	1.15				
0.21	6630	6559	56000	1.20	**R137**			290
0.24	5470	5834	57800	1.45	**RF137**	**R77**	**DRN63M4**	315
0.27	5170	5116	58200	1.55	**RM137**			425
0.31	4300	4464	59200	1.85				
0.35	3780	3928	59700	2.1				
0.29	4830	4709	58600	1.65				
0.34	4120	4018	59400	1.95	**R137**			280
0.39	3610	3514	59900	2.2	**RF137**	**R77**	**DRN63M4**	305
0.41	3430	3338	60000	2.3	**RM137**			415
0.47	3010	2929	60300	2.7				

P_N = 0.18 kW

n_a min^{-1}	M_a Nm	i	F_{Ra} N	SEW f_B	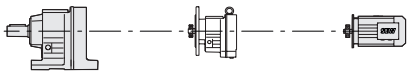			m kg
0.19	6610	7053	43000	0.90				
0.20	6540	6722	43000	0.90				
0.22	6110	6347	43000	1.00				
0.22	6250	6185	43000	0.95				
0.25	5650	5592	43000	1.05				
0.29	4790	4740	43000	1.25				
0.31	4320	4441	43000	1.40				
0.35	3700	3949	43000	1.60	**R127**			260
0.37	3660	3764	43000	1.65	**RF127**	**R77**	**DRN63M4**	270
0.39	3350	3571	43000	1.80	**RM127**			365
0.44	2770	3110	43000	2.2				
0.49	2510	2812	43000	2.4				
0.58	2130	2383	43000	2.8				
0.71	1880	1934	43000	3.2				
0.75	1720	1835	43000	3.5				
0.88	1460	1555	43000	4.1				
0.39	3590	3495	43000	1.65				
0.45	3140	3056	43000	1.90				
0.47	2980	2903	43000	2.0	**R127**			245
0.54	2610	2547	43000	2.3	**RF127**	**R77**	**DRN63M4**	265
0.64	2210	2161	43000	2.7	**RM127**			360
0.70	1970	1951	43000	3.1				
0.80	1690	1716	43000	3.6				
0.85	1580	1620	43000	3.8				
0.55	2560	2506	43000	2.3				
0.61	2320	2266	43000	2.6				
0.68	1990	2016	43000	3.0				
0.72	1960	1920	43000	3.1	**R127**			260
0.75	1790	1823	43000	3.3	**RF127**	**R77**	**DRN63M4**	270
0.82	1590	1673	43000	3.8	**RM127**			365
0.89	1520	1545	43000	3.9				
0.91	1440	1512	43000	4.2				
0.31	4270	4435	29600	1.00	**R107**			205
0.35	3790	3896	32000	1.15	**RF107**	**R77**	**DRN63M4**	210
0.45	3070	3039	34700	1.40	**RM107**			295
0.35	4020	3918	30900	1.05				
0.41	3430	3343	33400	1.25				
0.45	3110	3034	34600	1.40	**R107**			195
0.52	2720	2653	35800	1.60	**RF107**	**R77**	**DRN63M4**	205
0.60	2340	2280	36400	1.85	**RM107**			290
0.67	2110	2067	36600	2.0				
0.69	2000	1987	36800	2.2				
0.75	1780	1827	37000	2.4	**R107**			200
0.86	1520	1599	37200	2.8	**RF107**	**R77**	**DRN63M4**	210
0.98	1360	1400	37300	3.2	**RM107**			295
1.1	1160	1226	37500	3.7				

P_N = 0.18 kW

n_a min^{-1}	M_a Nm	i	F_{Ra} N	SEW f_B	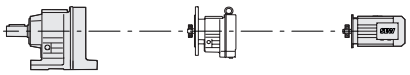			m kg
0.52	2860	2668	21900	1.05				
0.61	2370	2245	24700	1.25				
0.68	2100	2016	26000	1.45				
0.79	1880	1733	26800	1.60				
0.85	1760	1623	27200	1.70	**R97**			125
0.96	1540	1434	27600	1.95	**RF97**	**R57**	**DRN63M4**	145
1.1	1270	1207	27900	2.4	**RM97**			195
1.3	1130	1084	28100	2.7				
1.5	960	934	28300	3.1				
1.6	890	878	28300	3.4				
1.8	755	755	28400	4.0				
0.51	2960	2722	13500	1.00	**R97**			130
0.59	2510	2311	18900	1.20	**RF97**	**R57**	**DRN63M4**	145
0.66	2250	2078	21900	1.35	**RM97**			195
0.92	1620	1489	16400	0.95				
0.99	1510	1395	17200	1.05				
1.1	1320	1232	18300	1.15	**R87**			86
1.2	1220	1145	18900	1.25	**RF87**	**R57**	**DRN63M4**	93
1.3	1090	1037	19400	1.40	**RM87**			120
1.5	970	931	19900	1.60				
1.7	820	802	20000	1.90				
0.90	1610	1524	11700	0.95				
1.1	1330	1303	15800	1.15	**R87**			86
1.2	1160	1143	18100	1.35	**RF87**	**R57**	**DRN63M4**	93
1.6	930	885	20000	1.65	**RM87**			125
1.8	820	776	20000	1.90				
1.6	930	858	8720	0.90				
1.8	820	757	9950	1.00	**R77**			46
2.1	720	671	10800	1.15	**RF77**	**R37**	**DRN63M4**	52
2.4	600	571	11500	1.35	**RM77**			77
1.7	850	821	9650	0.95				
1.9	765	731	10400	1.05				
2.1	715	646	10800	1.15				
2.5	620	560	11400	1.30	**R77**			47
2.8	525	488	12000	1.55	**RF77**	**R37**	**DRN63M4**	53
3.2	465	436	12200	1.75	**RM77**			78
3.7	400	373	12500	2.0				
4.2	355	327	12600	2.3				
4.8	315	289	12800	2.6				
2.4	610	571	7430	1.00	**R67**			41
2.8	510	486	8470	1.15	**RF67**	**R37**	**DRN63M4**	44
					RM67			60
2.4	625	574	7220	0.95				
2.8	540	495	8210	1.10				
3.1	460	438	8920	1.30	**R67**			42
3.5	405	388	9290	1.45	**RF67**	**R37**	**DRN63M4**	45
4.0	375	344	9490	1.60	**RM67**			61
4.7	305	294	9870	2.0				
5.3	280	261	9980	2.2				
3.0	480	454	6560	0.95	**R57**			34
3.4	430	410	7180	1.05	**RF57**	**R37**	**DRN63M4**	38
					RM57			50

P_N = 0.18 kW

n_a min^{-1}	M_a Nm	i	F_{Ra} N	SEW f_B	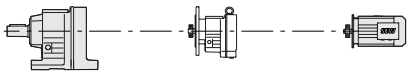			m kg
2.9	515	471	5880	0.85				
3.9	385	357	7360	1.15				
4.3	340	319	7510	1.30	**R57 RF57 RM57**	**R37**	**DRN63M4**	35
5.0	285	273	7660	1.55				39
5.7	250	241	7760	1.80				51
6.4	220	215	7810	2.0				
3.8	400	359	7300	1.10				
4.2	365	324	7440	1.25				
4.7	320	290	7570	1.40				
5.3	290	262	7660	1.55	**R57 RF57 RM57**	**R37**	**DRN63M4**	34
5.6	270	246	7710	1.65				38
6.3	240	220	7780	1.90				50
7.3	200	188	7850	2.2				
8.7	169	159	7900	2.7				
4.6	330	301	4200	0.90				
5.4	280	255	5510	1.10	**R47 RF47**	**R37**	**DRN63M4**	29
6.0	245	228	5680	1.20				29
7.1	210	195	5830	1.45				
6.9	220	199	3700	0.90				
8.0	190	172	4510	1.05	**R37 RF37**	**R17**	**DRN63M4**	18
9.2	165	150	5220	1.20				20
6.8	225	202	3550	0.90				
7.7	197	179	4340	1.00	**R37 RF37**	**R17**	**DRN63M4**	18
8.8	168	156	5150	1.20				20
9.8	150	141	3000	0.85				
11	133	124	3470	1.00	**R27 RF27**	**R17**	**DRN63M4**	13
12	119	110	3830	1.10				12
15	100	94	4050	1.30				
10	145	135	3130	0.90				
12	133	118	3460	1.00	**R27 RF27**	**R17**	**DRN63M4**	12
13	116	104	3920	1.10				12
15	100	90	4050	1.30				
4.7	365	195.24*	12600	2.2				
5.5	315	166.59	12800	2.6	**R77**			38
6.3	275	145.67	12900	3.0	**RF77**	**-**	**DRN71MS6**	44
6.6	260	138.39	12900	3.2	**RM77**			69
7.5	230	121.42	13000	3.6				
7.0	245	195.24*	12900	3.4				
8.3	210	166.59	13000	3.9	**R77**			38
9.4	182	145.67	13000	4.5	**RF77**	**-**	**DRN63M4**	44
9.9	173	138.39	13000	4.7	**RM77**			69
4.6	375	199.81	9490	1.60				
5.0	345	184.07	9660	1.75				
5.8	295	158.14	9900	2.0				
6.7	260	137.67	10100	2.3				
7.1	240	128.97	10100	2.5	**R67**			31
8.0	215	113.94	10200	2.8	**RF67**	**-**	**DRN71MS6**	34
8.7	199	105.83	10300	3.0	**RM67**			50
9.5	180	95.91	10300	3.3				
11	162	86.11	10400	3.7				
12	139	74.17	10400	4.3				
13	131	69.75	10400	4.6				

P_N = 0.18 kW

n_a min^{-1}	M_a Nm	i	F_{Ra} N	SEW f_B	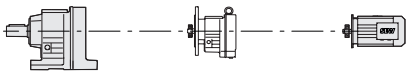			m kg
6.9	250	199.81	10100	2.4				
7.5	230	184.07	10200	2.6				
8.7	198	158.14	10300	3.0	**R67**			31
10	172	137.67	10300	3.5	**RF67**	-	**DRN63M4**	34
11	161	128.97	10400	3.7	**RM67**			50
12	142	113.94	10400	4.2				
13	132	105.83	10400	4.5				
4.9	350	186.89	7480	1.30				
5.3	325	172.17	7560	1.40	**R57**			25
6.2	280	147.92	7690	1.60	**RF57**	-	**DRN71MS6**	28
7.1	240	128.77	7770	1.85	**RM57**			40
7.6	225	120.63	7800	2.0				
7.4	235	186.89	7790	1.95				
8.0	215	172.17	7820	2.1				
9.3	185	147.92	7880	2.4	**R57**			24
11	151	120.63	7930	3.0	**RF57**	-	**DRN63M4**	27
11	161	128.77	7910	2.8	**RM57**			39
13	133	106.58	7950	3.4				
14	124	98.99	7960	3.6				
15	112	89.71	7970	4.0				
7.8	220	176.88	5780	1.35				
8.4	205	162.94	5840	1.45				
9.8	175	139.99	5930	1.70				
11	152	121.87	5990	1.95	**R47**			19
12	143	114.17	6010	2.1	**RF47**	-	**DRN63M4**	19
14	126	100.86	6050	2.4				
15	117	93.68	6070	2.6				
16	106	84.90	6090	2.8				
18	95	76.23	6100	3.2				
7.4	230	123.66	3330	0.85				
8.7	198	105.28	4300	1.00	**R37**			16
10	171	90.77	5070	1.15	**RF37**	-	**DRN71MS6**	17
11	159	84.61	5390	1.25				
10	169	134.82	5130	1.20				
11	155	123.66	5430	1.30				
13	132	105.28	5620	1.50				
15	113	90.77	5740	1.75				
16	106	84.61	5790	1.90	**R37**			15
19	92	73.96	5860	2.2	**RF37**	-	**DRN63M4**	17
20	87	69.33	5880	2.3				
22	76	61.18	5930	2.6				
25	70	55.76	5950	2.9				
29	60	48.08	5890	3.3				

P_N = 0.18 kW

n_a min^{-1}	M_a Nm	i	F_{Ra} N	SEW f_B	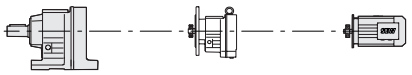			m kg
11	155	123.91	2880	0.85				
13	132	105.49	3490	1.00				
15	114	90.96	3970	1.15				
16	106	84.78	4020	1.25				
19	93	74.11	4090	1.40				
20	87	69.47	4110	1.50				
22	77	61.30	4170	1.70				
25	70	55.87	4170	1.85	**R27 RF27**	-	**DRN63M4**	9.3 9.2
29	60	48.17	4000	2.2				
31	56	44.90	3920	2.3				
35	49	39.25	3770	2.7				
37	46	36.79	3700	2.8				
42	41	32.47	3560	3.2				
48	36	28.78	3440	3.6				
56	31	24.47	3270	4.3				
48	35	28.37	3420	3.7				
53	33	26.09	3340	4.0				
62	28	22.32	3180	4.7				
71	24	19.35	3050	5.4	**R27 RF27**	-	**DRN63M4**	9.0 8.9
76	23	18.08	2990	5.8				
88	20	15.63	2850	6.7				
104	17	13.28*	2710	7.8				
17	102	81.64	485	0.85				
20	88	70.39	1580	0.95				
21	82	65.61	1950	1.05				
24	72	57.35	2390	1.20				
26	67	53.76	2430	1.25				
29	59	47.44	2430	1.45				
31	55	44.18	2390	1.55	**R17 RF17**	-	**DRN63M4**	8.9 8.8
36	48	38.61	2320	1.75				
38	45	36.20	2280	1.90				
43	40	31.94	2210	2.1				
49	35	28.32	2150	2.4				
57	30	24.07	2060	2.8				
54	32	25.23	2080	2.7				
59	29	23.15	2040	2.9	**R17 RF17**	-	**DRN63M4**	8.6 8.5
70	25	19.71	1950	3.5				
81	21	16.99	1870	4.0				
29	60	47.78	1180	0.85				
31	55	44.16	1210	0.90				
33	52	41.31	1240	0.95				
34	50	40.34	1250	1.00				
36	48	38.51	1260	1.05	**R07 RF07**	-	**DRN63M4**	7.8 7.8
40	43	34.05	1310	1.15				
47	36	29.08	1300	1.40				
51	34	26.97	1280	1.50				
59	29	23.32	1240	1.70				
63	27	21.73	1220	1.85				

P_N = 0.18 kW

n_a min^{-1}	M_a Nm	i	F_{Ra} N	SEW f_B	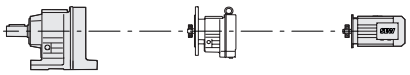			m kg
75	23	18.31	1180	2.2				
82	21	16.73	1150	2.4				
97	18	14.12	1110	2.8				
114	15	12.06	1060	3.3				
123	14	11.18	1040	3.6				
142	12	9.67	1000	4.1				
153	11	9.01	980	4.4				
175	9.8	7.85	940	5.0	**R07**	-	**DRN63M4**	7.6
184	9.4	7.48	930	4.6	**RF07**			7.6
201	8.5	6.83	910	5.0				
239	7.2	5.76	870	5.6				
279	6.2	4.92	830	6.0				
301	5.7	4.57	810	6.3				
348	4.9	3.95	775	6.9				
374	4.6	3.68	755	7.2				
429	4	3.21	725	7.7				
244	7.1	11.18	860	7.1				
282	6.1	9.67	820	8.2				
302	5.7	9.01	810	8.8				
347	5	7.85	775	9.9				
364	4.7	7.48	765	9.1				
399	4.3	6.83	740	10	**R07**	-	**DRN63MS2**	6.8
473	3.6	5.76	705	11	**RF07**			6.8
553	3.1	4.92	670	11				
597	2.9	4.57	655	12				
690	2.5	3.95	625	13				
741	2.3	3.68	610	14				
850	2	3.21	585	15				

P_N = 0.18 kW

n_a min^{-1}	M_a Nm	i	F_{Ra} N	SEW f_B	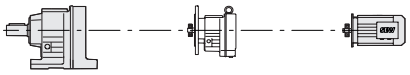			m kg
151	11	6.07	4860	3.8				
177	9.7	5.18	4610	7.7	**RX67**	-	**DRN71MS6**	18
202	8.5	4.53	4410	9.6	**RXF67**			22
213	8.1	4.30*	4340	9.9				
227	7.6	6.07	4250	5.7				
266	6.5	5.18	4040	11				
304	5.7	4.53	3870	14				
320	5.4	4.30*	3800	14				
364	4.7	3.77	3640	18	**RX67**	-	**DRN63M4**	17
430	4	3.20*	3450	25	**RXF67**			21
476	3.6	2.89	3340	29				
541	3.2	2.54	3200	37				
573	3	2.40*	3140	41				
673	2.6	2.04	2980	52				
166	10	5.50*	3820	3.8				
181	9.5	5.07	3720	3.8	**RX57**	-	**DRN71MS6**	15
210	8.2	4.35	3540	8.3	**RXF57**			17
241	7.1	3.79	3390	9.7				

P_N = 0.18 kW

n_a min^{-1}	M_a Nm	i	F_{Ra} N	SEW f_B	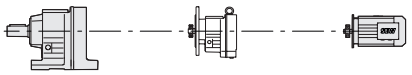			m kg
250	6.9	5.50*	3350	5.7				
271	6.3	5.07	3260	5.7				
316	5.4	4.35	3110	12				
363	4.7	3.79	2970	14				
387	4.4	3.55*	2910	15				
438	3.9	3.14	2790	16	**RX57**	-	**DRN63M4**	15
472	3.6	2.91	2720	18	**RXF57**			16
521	3.3	2.64*	2640	20				
580	3	2.37	2550	23				
673	2.6	2.04	2420	27				
716	2.4	1.92*	2380	28				
832	2.1	1.65	2260	33				

P_N = 0.25 kW

n_a min^{-1}	M_a Nm	i	F_{Ra} N	SEW f_B	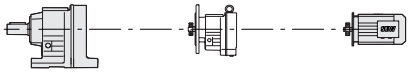			m kg
0.07	25100	20002	120000	0.80	**R167**			750
0.08	21800	17361	120000	0.90	**RF167**	**R97**	**DRN71MS4**	760
					RM167			950
0.14	13900	9743	60700	0.95				
0.17	11700	8443	65200	1.10				
0.19	10100	7307	67700	1.30				
0.22	8900	6447	69200	1.45				
0.25	7680	5568	70600	1.70	**R147**			420
0.29	6960	4926	71400	1.85	**RF147**	**R77**	**DRN71MS4**	430
0.32	6010	4325	72200	2.2	**RM147**			600
0.37	5300	3754	72700	2.5				
0.43	4590	3302	73200	2.8				
0.48	4000	2898	73500	3.3				
0.24	7900	5834	53600	1.00				
0.27	7300	5116	54800	1.10	**R137**			290
0.31	6160	4464	56800	1.30	**RF137**	**R77**	**DRN71MS4**	315
0.36	5420	3928	57900	1.50	**RM137**			425
0.30	6820	4709	55700	1.15				
0.35	5820	4018	57300	1.35	**R137**			280
0.40	5090	3514	58300	1.55	**RF137**	**R77**	**DRN71MS4**	305
0.42	4840	3338	58600	1.65	**RM137**			415
0.48	4240	2929	59300	1.90				
0.53	3840	2658	59700	2.1				
0.58	3480	2412	60000	2.3				
0.68	2990	2073	60300	2.7	**R137**			290
0.76	2570	1839	60600	3.1	**RF137**	**R77**	**DRN71MS4**	310
1.0	2000	1397	60900	4.0	**RM137**			425
1.2	1720	1226	61100	4.6				

P_N = 0.25 kW

n_a min^{-1}	M_a Nm	i	F_{Ra} N	SEW f_B	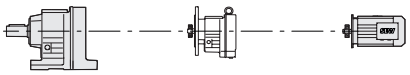			m kg
0.30	6760	4740	43000	0.90				
0.32	6170	4441	43000	0.95				
0.36	5350	3949	43000	1.10				
0.37	5230	3764	43000	1.15				
0.39	4840	3571	43000	1.25				
0.45	4070	3110	43000	1.45	**R127**			260
0.50	3680	2812	43000	1.65	**RF127**	**R77**	**DRN71MS4**	270
0.59	3120	2383	43000	1.90	**RM127**			365
0.73	2690	1934	43000	2.2				
0.77	2490	1835	43000	2.4				
0.90	2110	1555	43000	2.9				
0.97	1890	1444	43000	3.2				
1.2	1600	1224	43000	3.7				
0.40	5070	3495	43000	1.20				
0.46	4430	3056	43000	1.35				
0.48	4210	2903	43000	1.45				
0.55	3690	2547	43000	1.65				
0.65	3120	2161	43000	1.90	**R127**			245
0.72	2790	1951	43000	2.2	**RF127**	**R77**	**DRN71MS4**	265
0.82	2410	1716	43000	2.5	**RM127**			360
0.87	2260	1620	43000	2.7				
1.0	1890	1380	43000	3.2				
1.2	1750	1210	43000	3.4				
0.56	3620	2506	43000	1.65				
0.62	3270	2266	43000	1.85				
0.70	2840	2016	43000	2.1				
0.73	2770	1920	43000	2.2				
0.77	2560	1823	43000	2.3				
0.84	2290	1673	43000	2.6	**R127**			260
0.91	2170	1545	43000	2.8	**RF127**	**R77**	**DRN71MS4**	270
0.93	2070	1512	43000	2.9	**RM127**			365
1.1	1750	1322	43000	3.4				
1.1	1760	1282	43000	3.4				
1.2	1580	1195	43000	3.8				
1.2	1680	1164	43000	3.6				
1.4	1430	987	43000	4.2				
0.46	4340	3039	29300	1.00	**R107** **RF107** **RM107**	**R77**	**DRN71MS4**	205 210 300
0.46	4400	3034	28900	1.00	**R107** **RF107** **RM107**	**R77**	**DRN71MS4**	195 205 290
0.71	2840	1987	35400	1.50				
0.77	2550	1827	36100	1.70				
0.88	2190	1599	36600	1.95	**R107**			200
1.0	1960	1400	36800	2.2	**RF107**	**R77**	**DRN71MS4**	210
1.2	1680	1226	37100	2.6	**RM107**			295
1.5	1310	939	37400	3.3				
1.7	1130	822	37500	3.8				
0.81	2620	1733	23400	1.15	**R97**			125
0.87	2450	1623	24400	1.25	**RF97** **RM97**	**R57**	**DRN71MS4**	145 195

P_N = 0.25 kW

n_a min^{-1}	M_a Nm	i	F_{Ra} N	SEW f_B	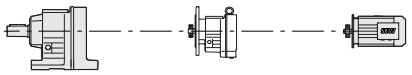			m kg
0.77	2730	1823	16300	1.10				
0.89	2370	1583	20500	1.25				
1.0	2050	1396	24300	1.45				
1.1	1780	1228	27200	1.70	**R97**			130
1.3	1610	1069	27500	1.85	**RF97**	**R57**	**DRN71MS4**	145
1.5	1400	938	27800	2.1	**RM97**			195
1.7	1190	824	28000	2.5				
1.9	1070	737	28200	2.8				
2.2	920	632	28300	3.3				
1.2	1700	1145	15800	0.90				
1.4	1530	1037	17000	1.00	**R87**			86
1.5	1370	931	18100	1.15	**RF87**	**R57**	**DRN71MS4**	93
1.8	1160	802	19100	1.35	**RM87**			125
1.2	1650	1143	11200	0.95				
1.6	1310	885	18400	1.20				
1.8	1150	776	19200	1.35				
2.1	1010	685	19800	1.55	**R87**			87
2.4	850	599	20000	1.80	**RF87**	**R57**	**DRN71MS4**	94
2.7	745	525	20000	2.1	**RM87**			125
3.1	655	456	20000	2.4				
5.3	380	268	20000	4.1				
					R77			47
2.5	840	571	9700	0.95	**RF77**	**R37**	**DRN71MS4**	53
					RM77			78
2.5	860	560	9580	0.95				
2.9	735	488	10700	1.10				
3.2	650	436	11200	1.25				
3.8	560	373	11800	1.45	**R77**			48
4.3	490	327	12100	1.65	**RF77**	**R37**	**DRN71MS4**	53
4.9	435	289	12300	1.90	**RM77**			78
5.4	390	260	12500	2.1				
6.3	325	224	12700	2.5				
3.6	570	388	7890	1.05				
4.1	520	344	8390	1.15				
4.8	425	294	9150	1.40				
5.4	390	261	9410	1.55	**R67**			42
6.0	350	234	9640	1.70	**RF67**	**R37**	**DRN71MS4**	45
7.0	295	200	9900	2.0	**RM67**			61
8.0	255	176	10100	2.4				
8.9	230	158	10200	2.6				
3.7	595	384	7630	1.00				
3.9	555	359	8070	1.10				
4.5	475	310	8790	1.25	**R67**			41
5.3	400	264	9330	1.50	**RF67**	**R37**	**DRN71MS4**	45
6.0	355	235	9600	1.70	**RM67**			60
7.0	300	201	9880	2.0				
7.7	270	181	10000	2.2				
4.4	475	319	6620	0.95				
5.2	405	273	7300	1.10				
5.8	350	241	7480	1.30	**R57**			36
6.5	315	215	7590	1.45	**RF57**	**R37**	**DRN71MS4**	39
7.5	275	187	7690	1.65	**RM57**			51
8.6	240	164	7780	1.90				
9.9	210	142	7840	2.2				

P_N = 0.25 kW

n_a min^{-1}	M_a Nm	i	F_{Ra} N	SEW f_B	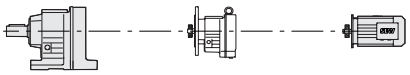			m kg
4.3	500	324	6130	0.90				
4.8	445	290	7130	1.00	**R57**			35
5.4	400	262	7300	1.10	**RF57**	**R37**	**DRN71MS4**	38
5.7	375	246	7400	1.20	**RM57**			50
6.4	330	220	7540	1.35				
6.2	345	228	3910	0.85				
7.2	290	195	5210	1.05	**R47**	**R37**	**DRN71MS4**	30
7.7	270	182	5560	1.10	**RF47**			30
9.1	225	154	5760	1.35				
9.4	230	150	3430	0.85				
11	185	124	4670	1.10	**R37**			19
11	194	130	4400	1.05	**RF37**	**R17**	**DRN71MS4**	20
13	164	110	5260	1.20				
15	139	94	5560	1.45				
10	205	135	4160	1.00				
11	197	127	4330	1.00	**R37**	**R17**	**DRN71MS4**	19
14	160	104	5370	1.25	**RF37**			20
16	138	90	5570	1.45				
4.7	510	195.24*	12000	1.60	**R77**			40
5.5	435	166.59	12400	1.90	**RF77**	**-**	**DRN71M6**	45
6.3	380	145.67	12600	2.2	**RM77**			70
7.2	330	195.24*	12700	2.5				
8.4	285	166.59	12800	2.9	**R77**			38
9.7	250	145.67	12900	3.3	**RF77**	**-**	**DRN71MS4**	44
10	235	138.39	13000	3.5	**RM77**			69
12	205	121.42	13000	4.0				
4.6	520	199.81	8390	1.15				
5.0	480	184.07	8750	1.25				
5.8	415	158.14	9250	1.45	**R67**			32
6.7	360	137.67	9580	1.65	**RF67**	**-**	**DRN71M6**	36
7.1	335	128.97	9710	1.80	**RM67**			51
8.0	295	113.94	9900	2.0				
8.7	275	105.83	9990	2.2				
7.0	340	199.81	9690	1.75				
7.6	315	184.07	9820	1.90				
8.9	270	158.14	10000	2.2				
10	235	137.67	10100	2.6	**R67**			31
11	220	128.97	10200	2.7	**RF67**	**-**	**DRN71MS4**	34
12	194	113.94	10300	3.1	**RM67**			50
13	180	105.83	10300	3.3				
15	163	95.91	10400	3.7				
16	146	86.11	10400	4.1				
4.9	490	186.89	6390	0.90				
5.3	450	172.17	7110	1.00				
6.2	385	147.92	7360	1.15	**R57**			26
7.1	335	128.77	7530	1.35	**RF57**	**-**	**DRN71M6**	29
7.6	315	120.63	7590	1.45	**RM57**			41
8.6	280	106.58	7690	1.60				
9.2	260	98.99	7730	1.75				

P_N = 0.25 kW

n_a min^{-1}	M_a Nm	i	F_{Ra} N	SEW f_B	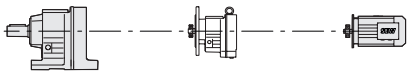			m kg
7.5	320	186.89	7580	1.40				
8.2	295	172.17	7650	1.55				
9.5	250	147.92	7750	1.80				
11	220	128.77	7820	2.1				
12	205	120.63	7840	2.2	**R57**			25
13	181	106.58	7880	2.5	**RF57**	-	**DRN71MS4**	28
14	168	98.99	7900	2.7	**RM57**			40
16	152	89.71	7920	3.0				
17	137	80.55	7940	3.3				
20	118	69.23	7970	3.8				
7.9	300	176.88	4980	1.00				
8.6	275	162.94	5540	1.10				
10	240	139.99	5710	1.25				
12	194	114.17	5870	1.55				
12	205	121.87	5830	1.45				
14	171	100.86	5940	1.75				
15	159	93.68	5970	1.90	**R47**			19
17	144	84.90	6010	2.1	**RF47**	-	**DRN71MS4**	20
18	130	76.23	6040	2.3				
21	116	68.54	6070	2.6				
22	109	64.21	6080	2.8				
25	96	56.73	6100	3.1				
27	90	52.69	6110	3.4				
29	81	47.75	5940	3.7				
10	230	134.82	3420	0.85				
11	210	123.66	3950	0.95				
13	179	105.28	4840	1.10				
15	154	90.77	5430	1.30				
17	144	84.61	5520	1.40				
19	126	73.96	5660	1.60				
20	118	69.33	5710	1.70	**R37**			16
23	104	61.18	5800	1.90	**RF37**	-	**DRN71MS4**	17
25	95	55.76	5840	2.1				
29	82	48.08	5740	2.5				
31	76	44.81	5630	2.6				
36	67	39.17	5410	3.0				
38	62	36.72	5310	3.2				
43	55	32.40	5110	3.6				
17	144	84.78	3160	0.90				
19	126	74.11	3640	1.05				
20	118	69.47	3850	1.10				
23	104	61.30	4030	1.25				
25	95	55.87	4010	1.35				
29	82	48.17	3860	1.60	**R27**			9.8
31	76	44.90	3790	1.70	**RF27**	-	**DRN71MS4**	9.8
36	67	39.25	3650	1.95				
38	63	36.79	3590	2.1				
43	55	32.47	3470	2.4				
49	49	28.78	3350	2.7				
57	42	24.47	3200	3.1				

P_N = 0.25 kW

n_a min^{-1}	M_a Nm	i	F_{Ra} N	SEW f_B	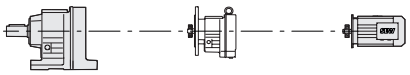			m kg
50	48	28.37	3340	2.7				
54	44	26.09	3260	2.9				
63	38	22.32	3110	3.4				
73	33	19.35	2980	4.0				
78	31	18.08	2920	4.2				
90	27	15.63	2800	4.9				
106	23	13.28*	2660	5.8				
118	20	11.86	2570	6.4				
139	17	10.13	2450	7.1	**R27**	-	**DRN71MS4**	9.6
149	16	9.41	2380	7.6	**RF27**			9.5
172	14	8.16	2280	8.4				
184	13	7.63*	2230	8.6				
213	11	6.59	2130	9.5				
251	9.5	5.60*	2030	10				
281	8.5	5.00*	1950	11				
329	7.3	4.27	1860	11				
351	6.8	4.00*	1820	12				
417	5.7	3.37	1720	13				
25	97	57.35	890	0.85				
26	91	53.76	1350	0.95				
30	81	47.44	2030	1.05				
32	75	44.18	2230	1.15				
36	66	38.61	2170	1.30	**R17**	-	**DRN71MS4**	9.4
39	62	36.20	2150	1.40	**RF17**			9.4
44	54	31.94	2090	1.55				
50	48	28.32	2040	1.75				
58	41	24.07	1960	2.1				
56	43	25.23	1990	2.0				
61	39	23.15	1950	2.2				
71	33	19.71	1870	2.5				
83	29	16.99	1800	2.9	**R17**	-	**DRN71MS4**	9.2
89	27	15.84	1770	3.2	**RF17**			9.1
102	24	13.84	1710	3.6				
108	22	12.98	1680	3.9				
123	19	11.45	1620	4.2				
41	58	34.05	1190	0.85				
48	49	29.08	1190	1.00	**R07**	-	**DRN71MS4**	8.3
52	46	26.97	1180	1.10	**RF07**			8.3
60	40	23.32	1150	1.25				
65	37	21.73	1140	1.35				
77	31	18.31	1110	1.60				
84	28	16.73	1090	1.75				
100	24	14.12	1050	2.1				
117	20	12.06	1010	2.4				
126	19	11.18	990	2.6				
145	16	9.67	960	3.0				
156	15	9.01	940	3.3				
179	13	7.85	910	3.7	**R07**	-	**DRN71MS4**	8.2
188	13	7.48	900	3.4	**RF07**			8.2
206	12	6.83	880	3.7				
244	9.8	5.76	840	4.1				
285	8.4	4.92	800	4.4				
308	7.8	4.57	785	4.6				
356	6.7	3.95	755	5.1				
382	6.3	3.68	740	5.3				
438	5.5	3.21	710	5.7				

P_N = 0.25 kW

n_a min^{-1}	M_a Nm	i	F_{Ra} N	SEW f_B	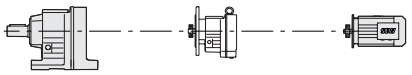			m kg
246	9.7	11.18	840	5.2				
285	8.4	9.67	800	6.0				
306	7.8	9.01	785	6.4				
351	6.8	7.85	755	7.2				
368	6.5	7.48	745	6.6				
403	5.9	6.83	725	7.3	**R07**	-	**DRN63M2**	7.6
478	5	5.76	690	8.0	**RF07**			7.6
560	4.3	4.92	660	8.7				
603	4	4.57	645	9.1				
698	3.4	3.95	615	9.9				
749	3.2	3.68	605	10				
859	2.8	3.21	580	11				

P_N = 0.25 kW

n_a min^{-1}	M_a Nm	i	F_{Ra} N	SEW f_B	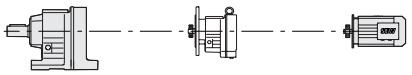			m kg
151	16	6.07	4830	2.7				
177	14	5.18	4590	5.6	**RX67**	-	**DRN71M6**	19
202	12	4.53	4390	6.9	**RXF67**			23
213	11	4.30*	4320	7.1				
232	10	6.07	4210	4.2				
271	8.8	5.18	4000	8.5				
310	7.7	4.53	3820	10				
327	7.3	4.30*	3760	10				
372	6.4	3.77	3600	13	**RX67**	-	**DRN71MS4**	18
439	5.4	3.20*	3420	18	**RXF67**			22
486	4.9	2.89	3300	21				
553	4.3	2.54	3170	27				
585	4.1	2.40*	3110	30				
688	3.5	2.04	2950	38				
166	14	5.50*	3790	2.7				
181	13	5.07	3700	2.7	**RX57**	-	**DRN71M6**	16
210	11	4.35	3520	6.0	**RXF57**			18
241	9.9	3.79	3370	7.0				
255	9.4	5.50*	3310	4.2				
277	8.6	5.07	3220	4.2				
323	7.4	4.35	3070	9.2				
371	6.4	3.79	2930	10				
396	6	3.55*	2870	11				
448	5.3	3.14	2760	12	**RX57**	-	**DRN71MS4**	15
482	5	2.91	2690	13	**RXF57**			17
532	4.5	2.64*	2610	15				
593	4	2.37	2520	17				
688	3.5	2.04	2400	19				
732	3.3	1.92*	2350	21				
850	2.8	1.65	2240	24				

P_N = 0.37 kW

n_a min^{-1}	M_a Nm	i	F_{Ra} N	SEW f_B	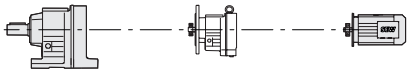			m kg
0.12	23500	11812	120000	0.85	**R167**			750
0.13	20900	10509	120000	0.95	**RF167**	**R97**	**DRN71M4**	760
0.15	19200	9631	120000	1.05	**RM167**			960

P_N = 0.37 kW

n_a min^{-1}	M_a Nm	i	F_{Ra} N	SEW f_B	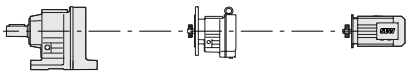			m kg
0.19	15500	7307	43700	0.85	**R147** **RF147** **RM147**	**R77**	**DRN71M4**	425
0.22	13700	6447	61200	0.95				430
0.25	11800	5568	64900	1.10				600
0.29	10600	4926	66900	1.25				
0.33	9220	4325	68800	1.40				
0.38	8090	3754	70200	1.60				
0.43	7040	3302	71300	1.85				
0.49	6150	2898	72100	2.1				
0.32	9470	4464	41400	0.85	**R137** **RF137** **RM137**	**R77**	**DRN71M4**	290
0.36	8330	3928	52500	0.95				315
								425
0.35	8840	4018	50300	0.90	**R137** **RF137** **RM137**	**R77**	**DRN71M4**	280
0.40	7730	3514	53900	1.05				305
0.42	7340	3338	54700	1.10				415
0.48	6440	2929	56300	1.25				
0.57	5450	2484	57800	1.45				
0.63	4890	2242	58500	1.65				
0.53	5840	2658	57300	1.35	**R137** **RF137** **RM137**	**R77**	**DRN71M4**	290
0.59	5300	2412	58000	1.50				315
0.68	4550	2073	58900	1.75				425
0.77	3950	1839	59500	2.0				
1.0	3050	1397	60300	2.6				
1.2	2640	1226	60600	3.0				
1.3	2380	1090	60700	3.4				
1.5	2070	951	60900	3.9				
0.46	6380	3110	43000	0.95	**R127** **RF127** **RM127**	**R77**	**DRN71M4**	260
0.50	5760	2812	43000	1.05				275
0.59	4890	2383	43000	1.25				370
0.73	4120	1934	43000	1.45				
0.77	3850	1835	43000	1.55				
0.91	3260	1555	43000	1.85				
0.98	2960	1444	43000	2.0				
1.2	2510	1224	43000	2.4				
0.46	6730	3056	43000	0.90	**R127** **RF127** **RM127**	**R77**	**DRN71M4**	245
0.49	6390	2903	43000	0.95				265
0.56	5610	2547	43000	1.05				360
0.65	4740	2161	43000	1.25				
0.73	4250	1951	43000	1.40				
0.82	3700	1716	43000	1.60				
0.87	3480	1620	43000	1.70				
1.0	2930	1380	43000	2.1				
1.2	2660	1210	43000	2.3				
1.5	2070	961	43000	2.9				
1.8	1640	773	43000	3.7				

P_N = 0.37 kW

n_a min^{-1}	M_a Nm	i	F_{Ra} N	SEW f_B	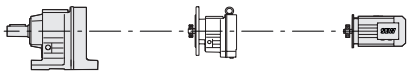			m kg
0.56	5500	2506	43000	1.10				
0.62	4970	2266	43000	1.20				
0.70	4350	2016	43000	1.40				
0.74	4220	1920	43000	1.40				
0.78	3930	1823	43000	1.55				
0.85	3550	1673	43000	1.70				
0.92	3330	1545	43000	1.80				
0.94	3210	1512	43000	1.85				
1.1	2720	1282	43000	2.2	**R127**			260
1.1	2740	1322	43000	2.2	**RF127**	**R77**	**DRN71M4**	270
1.2	2480	1195	43000	2.4	**RM127**			365
1.2	2560	1164	43000	2.4				
1.4	2100	1013	43000	2.9				
1.4	2170	987	43000	2.8				
1.5	2020	936	43000	3.0				
1.7	1750	830	43000	3.4				
1.8	1650	777	43000	3.6				
1.8	1710	794	43000	3.5				
1.9	1580	750	43000	3.8				
0.68	4540	2067	28100	0.95				
0.84	3690	1693	32400	1.15	**R107**			200
0.91	3330	1550	33800	1.30	**RF107**	**R77**	**DRN71M4**	205
1.0	3020	1407	34900	1.40	**RM107**			290
1.2	2600	1209	36000	1.65				
1.3	2270	1055	36500	1.90				
0.71	4330	1987	29300	1.00				
0.77	3920	1827	31400	1.10				
0.88	3390	1599	33600	1.25	**R107**			205
1.0	3010	1400	34900	1.45	**RF107**	**R77**	**DRN71M4**	210
1.2	2600	1226	36000	1.65	**RM107**			300
1.5	2020	939	36800	2.1				
1.7	1740	822	37000	2.5				
1.2	2690	1207	23000	1.10	**R97**			130
1.3	2400	1084	24600	1.25	**RF97**	**R57**	**DRN71M4**	145
					RM97			195
1.0	3100	1396	11900	0.95				
1.2	2700	1228	16600	1.10				
1.3	2410	1069	24500	1.25				
1.5	2110	938	26000	1.40				
1.7	1810	824	27100	1.65	**R97**			130
1.9	1620	737	27500	1.85	**RF97**	**R57**	**DRN71M4**	145
2.2	1390	632	27800	2.2	**RM97**			200
3.3	960	431	28300	3.1				
3.7	830	379	28400	3.6				
4.2	745	336	28400	4.0				
1.8	1760	802	15300	0.90	**R87**			87
1.9	1650	754	16200	0.95	**RF87**	**R57**	**DRN71M4**	95
2.2	1410	649	17800	1.10	**RM87**			125
1.8	1730	776	15500	0.90				
2.1	1530	685	17100	1.00				
2.4	1300	599	16200	1.20	**R87**			88
2.7	1140	525	18500	1.35	**RF87**	**R57**	**DRN71M4**	95
3.1	1000	456	19800	1.55	**RM87**			125
5.3	580	268	20000	2.7				
6.0	515	236	20000	3.0				

P_N = 0.37 kW

n_a min^{-1}	M_a Nm	i	F_{Ra} N	SEW f_B	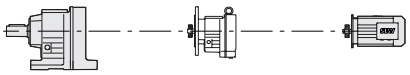			m kg
2.6	1230	538	18800	1.25	**R87**			87
3.0	1070	472	19500	1.45	**RF87**	**R57**	**DRN71M4**	94
3.5	900	400	20000	1.70	**RM87**			125
3.9	810	361	20000	1.90				
3.8	840	373	9740	1.00				
4.3	735	327	10600	1.10				
4.9	655	289	11200	1.25	**R77**			49
5.5	585	260	11600	1.40	**RF77**	**R37**	**DRN71M4**	55
6.3	495	224	12100	1.65	**RM77**			80
7.2	435	197	12400	1.90				
8.4	380	169	12600	2.2				
9.5	330	149	12700	2.5				
4.8	645	294	6700	0.95	**R67**			44
5.4	585	261	7730	1.05	**RF67**	**R37**	**DRN71M4**	47
6.0	525	234	8350	1.15	**RM67**			63
7.1	445	200	9020	1.35				
3.2	1090	289.74	28100	2.7	**R97**			110
3.7	970	255.71	28300	3.1	**RF97**	**-**	**DRN80MK6**	125
3.9	910	241.25	28300	3.3	**RM97**			180
4.3	820	216.28	28400	3.7				
3.8	930	246.54	20000	1.65				
4.3	820	216.54	20000	1.90	**R87**			68
4.6	775	205.71	20000	2.0	**RF87**	**-**	**DRN80MK6**	75
5.1	685	181.77	20000	2.3	**RM87**			105
6.0	585	155.34	20000	2.6				
6.6	540	142.41	20000	2.9				
5.6	630	166.59	11400	1.30	**R77**			42
6.4	550	145.67	11800	1.50	**RF77**	**-**	**DRN80MK6**	48
6.8	525	138.39	12000	1.55	**RM77**			73
7.3	490	195.24*	12100	1.70				
8.5	415	166.59	12400	1.95				
9.7	365	145.67	12600	2.3	**R77**			40
10	345	138.39	12700	2.4	**RF77**	**-**	**DRN71M4**	45
12	305	121.42	12800	2.7	**RM77**			70
14	255	102.99	12900	3.2				
15	230	92.97	13000	3.5				
5.9	600	158.14	7590	1.00				
6.8	520	137.67	8400	1.15	**R67**			35
7.3	485	128.97	8690	1.25	**RF67**	**-**	**DRN80MK6**	38
8.2	430	113.94	9130	1.40	**RM67**			54
7.1	500	199.81	8590	1.20				
7.7	460	184.07	8910	1.30				
9.0	395	158.14	9370	1.50				
10	345	137.67	9670	1.75				
11	320	128.97	9780	1.85				
12	285	113.94	9950	2.1	**R67**			32
13	265	105.83	10000	2.3	**RF67**	**-**	**DRN71M4**	36
15	240	95.91	10100	2.5	**RM67**			51
16	215	86.11	10200	2.8				
19	185	74.17	10300	3.2				
20	174	69.75	10300	3.4				
23	153	61.26	10400	3.9				
25	142	56.89	10400	4.2				

P_N = 0.37 kW

n_a min^{-1}	M_a Nm	i	F_{Ra} N	SEW f_B	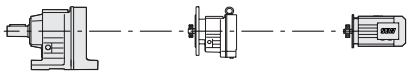			m kg
7.3	485	128.77	6410	0.90	**R57**	-	**DRN80MK6**	28
7.8	455	120.63	7000	1.00	**RF57**	-	**DRN80MK6**	32
8.8	405	106.58	7300	1.10	**RM57**	-	**DRN80MK6**	44
9.5	375	98.99	7400	1.20	**RM57**	-	**DRN80MK6**	44
7.6	465	186.89	6790	0.95	**R57**	-	**DRN71M4**	26
8.2	430	172.17	7190	1.05	**R57**	-	**DRN71M4**	26
9.6	370	147.92	7420	1.20	**R57**	-	**DRN71M4**	26
11	320	128.77	7570	1.40	**R57**	-	**DRN71M4**	26
12	300	120.63	7630	1.50	**R57**	-	**DRN71M4**	26
13	265	106.58	7720	1.70	**R57**	-	**DRN71M4**	26
14	245	98.99	7760	1.80	**R57**	-	**DRN71M4**	29
16	225	89.71	7810	2.0	**R57**	-	**DRN71M4**	29
18	200	80.55	7850	2.2	**R57**	-	**DRN71M4**	29
20	173	69.23	7900	2.6	**R57**	-	**DRN71M4**	29
22	162	64.85	7910	2.8	**R57**	-	**DRN71M4**	29
25	143	57.29	7700	3.2	**R57**	-	**DRN71M4**	29
27	133	53.22	7540	3.4	**R57**	-	**DRN71M4**	29
29	120	48.23	7330	3.7	**R57**	-	**DRN71M4**	29
10	350	139.99	3770	0.85	**R47**	-	**DRN71M4**	21
12	285	114.17	5360	1.05	**R47**	-	**DRN71M4**	21
12	305	121.87	4890	1.00	**R47**	-	**DRN71M4**	21
14	250	100.86	5650	1.20	**R47**	-	**DRN71M4**	21
15	235	93.68	5730	1.30	**R47**	-	**DRN71M4**	21
17	210	84.90	5810	1.40	**R47**	-	**DRN71M4**	21
19	190	76.23	5880	1.60	**R47**	-	**DRN71M4**	21
21	171	68.54	5940	1.75	**R47**	-	**DRN71M4**	21
22	160	64.21	5970	1.85	**R47**	-	**DRN71M4**	21
25	142	56.73	6020	2.1	**R47**	-	**DRN71M4**	21
27	132	52.69	5950	2.3	**R47**	-	**DRN71M4**	21
30	119	47.75	5780	2.5	**R47**	-	**DRN71M4**	21
33	107	42.87	5610	2.8	**R47**	-	**DRN71M4**	21
38	92	36.93	5370	3.3	**R47**	-	**DRN71M4**	21
41	87	34.73	5280	3.5	**R47**	-	**DRN71M4**	21
42	84	33.79	5230	2.8	**R47**	-	**DRN71M4**	20
45	78	31.12	5110	2.8	**R47**	-	**DRN71M4**	20
53	67	26.74	4880	4.5	**R47**	-	**DRN71M4**	20
61	58	23.28	4680	5.2	**R47**	-	**DRN71M4**	20
65	54	21.81	4590	5.5	**R47**	-	**DRN71M4**	20
16	225	90.77	3490	0.90	**R37**	-	**DRN71M4**	17
17	210	84.61	3920	0.95	**R37**	-	**DRN71M4**	17
19	185	73.96	4670	1.10	**R37**	-	**DRN71M4**	17
20	173	69.33	5000	1.15	**R37**	-	**DRN71M4**	17
23	153	61.18	5450	1.30	**R37**	-	**DRN71M4**	17
25	139	55.76	5560	1.45	**R37**	-	**DRN71M4**	17
29	120	48.08	5550	1.65	**R37**	-	**DRN71M4**	17
32	112	44.81	5440	1.80	**R37**	-	**DRN71M4**	18
36	98	39.17	5250	2.0	**R37**	-	**DRN71M4**	18
39	92	36.72	5160	2.2	**R37**	-	**DRN71M4**	18
44	81	32.40	4980	2.5	**R37**	-	**DRN71M4**	18
49	72	28.73	4810	2.8	**R37**	-	**DRN71M4**	18
58	61	24.42	4590	3.3	**R37**	-	**DRN71M4**	18

P_N = 0.37 kW

n_a min^{-1}	M_a Nm	i	F_{Ra} N	SEW f_B	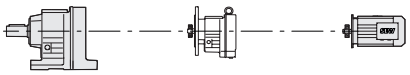			m kg
50	71	28.32	4790	2.8				
54	65	26.03	4680	2.9				
64	56	22.27	4470	3.6				
73	48	19.31	4280	4.2	**R37**	-	**DRN71M4**	17
78	45	18.05	4200	4.4	**RF37**			18
91	39	15.60	4020	5.1				
107	33	13.25	3820	5.7				
120	30	11.83	3690	6.2				
23	153	61.30	2930	0.85				
25	140	55.87	3280	0.95				
29	120	48.17	3660	1.10				
32	112	44.90	3600	1.15	**R27**			11
36	98	39.25	3490	1.35	**RF27**	-	**DRN71M4**	11
38	92	36.79	3430	1.40				
44	81	32.47	3330	1.60				
49	72	28.78	3230	1.80				
58	61	24.47	3090	2.1				
50	71	28.37	3220	1.85				
54	65	26.09	3150	2.0				
63	56	22.32	3020	2.3	**R27**			11
73	48	19.35	2900	2.7	**RF27**	-	**DRN71M4**	11
78	45	18.08	2840	2.9				
91	39	15.63	2730	3.3				
107	33	13.28*	2600	3.9				
37	96	38.61	970	0.90				
39	90	36.20	1420	0.95	**R17**			11
44	80	31.94	1900	1.05	**RF17**	-	**DRN71M4**	11
50	71	28.32	1870	1.20				
59	60	24.07	1820	1.40				
56	63	25.23	1840	1.35				
61	58	23.15	1810	1.45				
72	49	19.71	1750	1.75				
83	42	16.99	1700	2.0				
89	40	15.84	1680	2.2				
102	35	13.84	1630	2.5				
109	32	12.98	1600	2.6				
124	29	11.45	1550	2.8	**R17**			10
139	25	10.15	1510	3.0	**RF17**	-	**DRN71M4**	10
164	22	8.63	1450	3.3				
187	19	7.55	1360	3.0				
201	18	7.04	1340	3.1				
230	15	6.15	1290	3.5				
245	14	5.76	1270	3.7				
278	13	5.09	1230	4.0				
314	11	4.51	1190	4.3				
369	9.6	3.83	1140	4.7				

P_N = 0.37 kW

n_a min^{-1}	M_a Nm	i	F_{Ra} N	SEW f_B	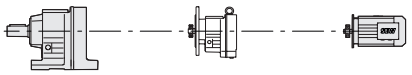			m kg
77	46	18.31	990	1.10				
85	42	16.73	980	1.20				
100	35	14.12	960	1.40				
117	30	12.06	940	1.65				
127	28	11.18	920	1.80				
146	24	9.67	900	2.1				
157	23	9.01	890	2.2				
180	20	7.85	860	2.5	**R07**	-	**DRN71M4**	9.4
189	19	7.48	860	2.3	**RF07**			9.4
207	17	6.83	840	2.5				
245	14	5.76	800	2.8				
287	12	4.92	775	3.0				
310	11	4.57	760	3.2				
358	9.9	3.95	730	3.5				
385	9.2	3.68	715	3.6				
441	8	3.21	690	3.9				
291	12	9.67	770	4.1				
312	11	9.01	755	4.4				
358	9.9	7.85	730	5.0				
376	9.4	7.48	720	4.6				
411	8.6	6.83	705	5.0				
487	7.3	5.76	670	5.5	**R07**	-	**DRN71MS2**	8.2
571	6.2	4.92	640	6.0	**RF07**			8.2
615	5.7	4.57	625	6.3				
712	5	3.95	600	6.9				
764	4.6	3.68	590	7.1				
876	4	3.21	565	7.7				

P_N = 0.37 kW

n_a min^{-1}	M_a Nm	i	F_{Ra} N	SEW f_B	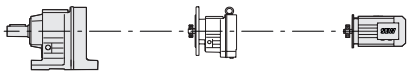			m kg
181	20	5.18	4520	3.8				
207	17	4.53	4330	4.8	**RX67**	-	**DRN80MK6**	21
217	16	4.30*	4260	4.9	**RXF67**			25
248	14	3.77	4080	6.1				
233	15	6.07	4170	2.8				
273	13	5.18	3960	5.8				
313	11	4.53	3790	7.3				
329	11	4.30*	3730	7.5				
375	9.4	3.77	3580	9.2	**RX67**	-	**DRN71M4**	19
442	8	3.20*	3390	12	**RXF67**			23
490	7.2	2.89	3280	14				
557	6.4	2.54	3150	18				
590	6	2.40*	3090	20				
692	5.1	2.04	2930	26				
215	16	4.35	3460	4.1				
247	14	3.79	3310	4.8	**RX57**	-	**DRN80MK6**	19
263	13	3.55*	3240	5.1	**RXF57**			21

P_N = 0.37 kW

n_a min^{-1}	M_a Nm	i	F_{Ra} N	SEW f_B	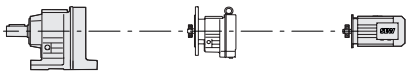			m kg
257	14	5.50*	3270	2.8				
279	13	5.07	3190	2.9				
325	11	4.35	3040	6.3				
373	9.5	3.79	2910	7.3				
399	8.9	3.55*	2850	7.8				
451	7.8	3.14	2740	8.3	**RX57**	-	**DRN71M4**	16
486	7.3	2.91	2670	9.2	**RXF57**			18
536	6.6	2.64*	2590	10				
597	5.9	2.37	2500	11				
693	5.1	2.04	2380	13				
737	4.8	1.92*	2330	14				
856	4.1	1.65	2220	16				

P_N = 0.55 kW

n_a min^{-1}	M_a Nm	i	F_{Ra} N	SEW f_B	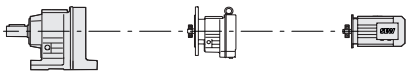			m kg
0.24	18600	6077	120000	1.05				
0.27	16600	5407	120000	1.20	**R167**			760
0.31	14100	4650	120000	1.40	**RF167**	**R97**	**DRN80MK4**	760
0.35	12300	4129	120000	1.65	**RM167**			960
0.54	8280	2657	120000	2.4				
0.62	7160	2333	120000	2.8				
0.69	6280	2085	120000	3.2				
1.0	4480	1438	120000	4.5	**R167**			750
1.1	3990	1279	120000	5.0	**RF167**	**R97**	**DRN80MK4**	760
1.3	3450	1123	120000	5.8	**RM167**			950
1.4	3070	999	120000	6.5				
1.7	2640	861	120000	7.6				
1.9	2360	760	120000	8.5				
0.29	15900	4926	37500	0.80				
0.33	13900	4325	60800	0.95	**R147**			425
0.38	12100	3754	64300	1.05	**RF147**	**R77**	**DRN80MK4**	435
0.43	10600	3302	66900	1.25	**RM147**			600
0.50	9280	2898	68800	1.40				
0.56	8410	2555	69800	1.55				
0.65	7270	2211	71100	1.80				
0.74	6420	1951	71900	2.0	**R147**			425
0.84	5480	1705	72600	2.4	**RF147**	**R77**	**DRN80MK4**	435
0.93	4910	1536	73000	2.7	**RM147**			600
1.1	4250	1329	73400	3.1				
1.2	3700	1166	73700	3.5				
0.58	8170	2484	53000	1.00	**R137** **RF137** **RM137**	**R77**	**DRN80MK4**	285 305 420
0.54	8740	2658	50800	0.90				
0.59	7940	2412	53500	1.00				
0.69	6820	2073	55700	1.15				
0.78	5960	1839	57100	1.35				
0.90	5110	1598	58300	1.55	**R137**			295
1.0	4580	1397	58900	1.75	**RF137**	**R77**	**DRN80MK4**	315
1.2	3990	1226	59500	2.0	**RM137**			425
1.3	3570	1090	59900	2.2				
1.5	3110	951	60300	2.6				
1.7	2660	831	60600	3.0				

P_N = 0.55 kW

n_a min^{-1}	M_a Nm	i	F_{Ra} N	SEW f_B	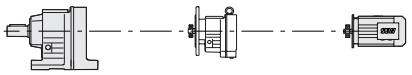			m kg
0.74	6210	1934	43000	0.95				
0.78	5830	1835	43000	1.05	**R127**			265
0.92	4940	1555	43000	1.20	**RF127**	**R77**	**DRN80MK4**	275
0.99	4520	1444	43000	1.35	**RM127**			370
1.2	3830	1224	43000	1.55				
0.66	7110	2161	43000	0.85				
0.74	6390	1951	43000	0.95				
0.84	5580	1716	43000	1.05				
0.89	5250	1620	43000	1.15	**R127**			250
1.0	4440	1380	43000	1.35	**RF127**	**R77**	**DRN80MK4**	270
1.2	3980	1210	43000	1.50	**RM127**			365
1.5	3130	961	43000	1.90				
1.9	2490	773	43000	2.4				
2.4	1930	608	43000	3.1				
0.71	6560	2016	43000	0.90				
0.75	6320	1920	43000	0.95				
0.79	5930	1823	43000	1.00				
0.86	5380	1673	43000	1.10				
0.93	5020	1545	43000	1.20				
0.95	4860	1512	43000	1.25				
1.1	4120	1282	43000	1.45				
1.1	4190	1322	43000	1.45				
1.2	3790	1195	43000	1.60				
1.2	3830	1164	43000	1.55	**R127**			265
1.4	3210	1013	43000	1.85	**RF127**	**R77**	**DRN80MK4**	275
1.5	3050	936	43000	1.95	**RM127**			370
1.5	3250	987	43000	1.85				
1.7	2650	830	43000	2.3				
1.8	2580	794	43000	2.3				
1.9	2400	750	43000	2.5				
1.9	2500	777	43000	2.4				
2.2	2120	659	43000	2.8				
2.3	1950	614	43000	3.1				
2.3	2030	636	43000	3.0				
2.8	1650	521	43000	3.6				
2.9	1630	490	43000	3.7	**R127** **RF127** **RM127**	**R77**	**DRN80MK4**	245 265 365
1.0	4560	1407	28000	0.95				
1.2	3920	1209	31400	1.10				
1.4	3420	1055	33500	1.25	**R107**			200
1.6	2990	919	35000	1.45	**RF107**	**R77**	**DRN80MK4**	205
1.8	2670	815	35900	1.60	**RM107**			295
2.0	2330	717	36400	1.85				
2.3	2040	626	36700	2.1				
1.0	4540	1400	28100	0.95				
1.2	3940	1226	31300	1.10	**R107**			205
1.3	3530	1104	33000	1.20	**RF107**	**R77**	**DRN80MK4**	210
1.5	3040	939	34800	1.40	**RM107**			300
1.8	2640	822	36000	1.65				

P_N = 0.55 kW

n_a min^{-1}	M_a Nm	i	F_{Ra} N	SEW f_B	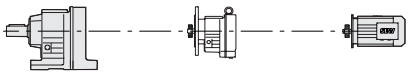			m kg
1.7	2720	824	16400	1.10				
2.0	2430	737	19800	1.25				
2.3	2080	632	26100	1.45				
2.6	1810	560	27100	1.65				
3.0	1570	484	27500	1.90	**R97**			135
3.3	1430	431	27700	2.1	**RF97**	**R57**	**DRN80MK4**	150
3.8	1250	379	28000	2.4	**RM97**			200
4.3	1110	336	28100	2.7				
4.9	970	296	28200	3.1				
5.8	810	249	28400	3.7				
2.7	1710	525	10200	0.90				
3.2	1500	456	17300	1.05	**R87**			90
3.6	1290	398	18500	1.20	**RF87**	**R57**	**DRN80MK4**	98
4.1	1150	352	19200	1.35	**RM87**			125
4.7	990	305	19900	1.55				
3.0	1590	472	16600	0.95	**R87**			89
3.6	1350	400	18200	1.15	**RF87**	**R57**	**DRN80MK4**	96
4.0	1210	361	18900	1.30	**RM87**			125
5.2	930	276	8710	0.90				
6.1	795	236	10200	1.05	**R77**			50
6.5	745	221	10600	1.10	**RF77**	**R37**	**DRN80MK4**	56
7.7	625	186	11400	1.30	**RM77**			81
3.3	1580	289.74	27500	1.90				
3.8	1390	255.71	27800	2.2	**R97**			120
4.0	1310	241.25	27900	2.3	**RF97**	**-**	**DRN90SR6**	135
4.5	1180	216.28	28000	2.6	**RM97**			185
5.0	1060	289.74	28200	2.8				
5.6	940	255.71	28300	3.2	**R97**			110
6.0	880	241.25	28300	3.4	**RF97**	**-**	**DRN80MK4**	125
6.6	790	216.28	28400	3.8	**RM97**			180
3.9	1340	246.54	15600	1.15				
4.5	1180	216.54	17900	1.30	**R87**			77
4.7	1120	205.71	18800	1.40	**RF87**	**-**	**DRN90SR6**	84
5.3	990	181.77	19900	1.55	**RM87**			115
6.2	840	155.34	20000	1.85				
5.8	900	246.54	20000	1.70				
6.6	795	216.54	20000	1.95				
7.0	755	205.71	20000	2.1				
7.9	665	181.77	20000	2.3	**R87**			68
9.2	570	155.34	20000	2.7	**RF87**	**-**	**DRN80MK4**	75
10	520	142.41	20000	3.0	**RM87**			105
11	455	124.97	20000	3.4				
12	435	118.43*	20000	3.6				
14	380	103.65	20000	4.1				
8.6	610	166.59	11500	1.35				
9.9	535	145.67	11900	1.55				
10	505	138.39	12000	1.60				
12	445	121.42	12300	1.85	**R77**			42
14	375	102.99	12600	2.2	**RF77**	**-**	**DRN80MK4**	48
15	340	92.97	12700	2.4	**RM77**			73
18	300	81.80	12800	2.7				
19	285	77.24	12800	2.9				
22	240	65.77	12900	3.4				

P_N = 0.55 kW

n_a min^{-1}	M_a Nm	i	F_{Ra} N	SEW f_B	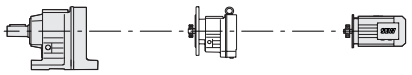			m kg
9.1	580	158.14	7800	1.05				
10	505	137.67	8550	1.20				
11	470	128.97	8820	1.25				
13	415	113.94	9220	1.45				
14	385	105.83	9420	1.55	**R67**			35
15	350	95.91	9630	1.70	**RF67**	-	**DRN80MK4**	38
17	315	86.11	9810	1.90	**RM67**			54
19	270	74.17	10000	2.2				
21	255	69.75	10100	2.4				
23	225	61.26	10200	2.7				
25	210	56.89	10200	2.9				
12	440	120.63	7140	1.00				
13	390	106.58	7340	1.15				
15	360	98.99	7440	1.25				
16	330	89.71	7550	1.35				
18	295	80.55	7640	1.55				
21	255	69.23	7750	1.80	**R57**			28
22	235	64.85	7670	1.90	**RF57**	-	**DRN80MK4**	32
25	210	57.29	7430	2.2	**RM57**			44
27	195	53.22	7280	2.3				
30	177	48.23	7090	2.6				
33	158	43.30	6880	2.8				
38	137	37.30*	6600	3.3				
41	128	35.07	6480	3.5				
55	96	26.31	5960	4.7				
57	91	24.99*	5870	4.9	**R57**			27
65	80	21.93	5650	5.6	**RF57**	-	**DRN80MK4**	31
77	68	18.60*	5380	6.6	**RM57**			43
15	345	93.68	3940	0.85				
17	310	84.90	4730	0.95				
19	280	76.23	5510	1.10				
21	250	68.54	5660	1.20				
22	235	64.21	5720	1.30				
25	210	56.73	5800	1.45	**R47**			23
27	193	52.69	5690	1.55	**RF47**	-	**DRN80MK4**	23
30	175	47.75	5550	1.70				
33	157	42.87	5400	1.90				
39	135	36.93	5190	2.2				
41	127	34.73	5100	2.4				
48	109	29.88	4890	2.7				
54	98	26.74	4740	3.1				
62	85	23.28	4560	3.5	**R47**	-	**DRN80MK4**	22
66	80	21.81	4470	3.8	**RF47**			23
23	225	61.18	3560	0.90				
26	205	55.76	4120	1.00				
30	176	48.08	4920	1.15				
32	164	44.81	5170	1.20				
37	143	39.17	5010	1.40	**R37**	-	**DRN80MK4**	19
39	134	36.72	4930	1.50	**RF37**			21
44	119	32.40	4780	1.70				
50	105	28.73	4630	1.90				
59	89	24.42	4430	2.2				

P_N = 0.55 kW

n_a min^{-1}	M_a Nm	i	F_{Ra} N	SEW f_B	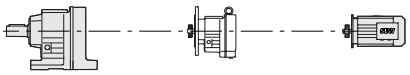			m kg
64	82	22.27	4320	2.5				
74	71	19.31	4160	2.8				
80	66	18.05	4080	3.0	**R37**	-	**DRN80MK4**	19
92	57	15.60	3910	3.5	**RF37**			20
108	49	13.25	3730	3.9				
121	43	11.83	3610	4.2				
37	144	39.25	3180	0.90				
39	135	36.79	3210	0.95	**R27**			13
44	119	32.47	3130	1.10	**RF27**	-	**DRN80MK4**	13
50	105	28.78	3050	1.25				
59	90	24.47	2940	1.45				
64	82	22.32	2870	1.60				
74	71	19.35	2770	1.85				
79	66	18.08	2730	1.95				
92	57	15.63	2630	2.3				
108	49	13.28*	2520	2.7				
121	43	11.86	2440	3.0				
142	37	10.13	2330	3.3				
152	34	9.41	2260	3.5	**R27**	-	**DRN80MK4**	13
176	30	8.16	2170	3.9	**RF27**			13
188	28	7.63*	2130	4.0				
218	24	6.59	2040	4.4				
256	21	5.60*	1950	4.8				
287	18	5.00*	1880	5.2				
336	16	4.27	1800	5.6				
359	15	4.00*	1760	5.8				
426	12	3.37	1670	6.4				
53	100	53.76	680	0.85				
60	88	47.44	1560	0.95	**R17**	-	**DRN71M2**	11
64	82	44.18	1600	1.05	**RF17**			11
73	72	38.61	1580	1.20				
73	72	19.71	1580	1.20				
84	62	16.99	1550	1.35				
91	58	15.84	1530	1.45				
104	51	13.84	1500	1.70				
111	47	12.98	1480	1.80				
125	42	11.45	1450	1.95				
141	37	10.15	1410	2.1	**R17**			13
166	32	8.63	1370	2.3	**RF17**	-	**DRN80MK4**	12
190	28	7.55	1280	2.0				
204	26	7.04	1260	2.1				
233	23	6.15	1220	2.4				
249	21	5.76	1210	2.5				
282	19	5.09	1170	2.7				
318	17	4.51	1140	2.9				
374	14	3.83	1090	3.2				
327	16	8.63	1160	4.5				
374	14	7.55	1090	4.0	**R17**	-	**DRN71M2**	10
402	13	7.04	1070	4.2	**RF17**			10
459	11	6.15	1030	4.7				

P_N = 0.55 kW

n_a min^{-1}	M_a Nm	i	F_{Ra} N	SEW f_B	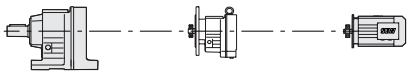			m kg
154	34	18.31	810	1.45				
169	31	16.73	795	1.60				
200	26	14.12	775	1.90				
234	22	12.06	755	2.2				
253	21	11.18	745	2.4				
292	18	9.67	725	2.8				
313	17	9.01	710	3.0				
360	15	7.85	690	3.4	**R07**	-	**DRN71M2**	9.4
378	14	7.48	685	3.1	**RF07**			9.4
414	13	6.83	670	3.4				
490	11	5.76	645	3.7				
574	9.2	4.92	620	4.0				
619	8.5	4.57	605	4.2				
715	7.3	3.95	585	4.6				
768	6.8	3.68	570	4.8				
881	6	3.21	550	5.2				

P_N = 0.55 kW

n_a min^{-1}	M_a Nm	i	F_{Ra} N	SEW f_B	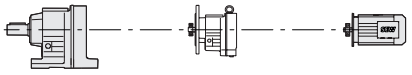			m kg
187	28	5.18	4410	2.7				
213	25	4.53	4230	3.3	**RX67**	-	**DRN90SR6**	29
225	23	4.30*	4160	3.4	**RXF67**			33
256	21	3.77	4000	4.2				
277	19	5.18	3900	4.0				
317	17	4.53	3740	5.0				
334	16	4.30*	3680	5.1				
380	14	3.77	3530	6.3				
448	12	3.20*	3350	8.5	**RX67**			21
497	11	2.89	3240	10	**RXF67**	-	**DRN80MK4**	25
565	9.3	2.54	3110	12				
598	8.8	2.40*	3050	14				
702	7.5	2.04	2900	17				
773	6.8	1.86	2810	18				
892	5.9	1.61	2680	19				
222	24	4.35	3370	2.9				
255	21	3.79	3230	3.4	**RX57**			27
272	19	3.55*	3160	3.6	**RXF57**	-	**DRN90SR6**	29
308	17	3.14	3050	3.8				
332	16	2.91	2980	4.2				
330	16	4.35	2990	4.3				
379	14	3.79	2860	5.0				
404	13	3.55*	2800	5.3				
458	11	3.14	2700	5.7				
493	11	2.91	2630	6.3				
544	9.7	2.64*	2550	7.1	**RX57**			19
605	8.7	2.37	2470	8.0	**RXF57**	-	**DRN80MK4**	21
703	7.5	2.04	2350	9.2				
747	7	1.92*	2310	9.8				
869	6.1	1.65	2200	11				
972	5.4	1.48	2120	12				
1100	4.8	1.30	2040	13				

P_N = 0.75 kW

n_a min^{-1}	M_a Nm	i	F_{Ra} N	SEW f_B	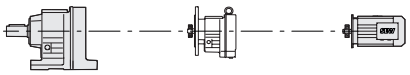			m kg
0.27	23200	5407	120000	0.85	**R167**			760
0.31	19800	4650	120000	1.00	**RF167**	**R97**	**DRN80M4**	770
0.35	17300	4129	120000	1.15	**RM167**			960
0.39	15300	3692	120000	1.30				
0.54	11600	2657	120000	1.75				
0.62	10000	2333	120000	2.0				
0.69	8850	2085	120000	2.3				
0.77	7850	1877	120000	2.6				
0.86	6990	1670	120000	2.9	**R167**			760
1.0	6260	1438	120000	3.2	**RF167**	**R97**	**DRN80M4**	760
1.1	5570	1279	120000	3.6	**RM167**			960
1.3	4830	1123	120000	4.1				
1.4	4300	999	120000	4.7				
1.7	3710	861	120000	5.4				
1.9	3300	760	120000	6.1				
0.44	14600	3302	54700	0.90	**R147**			430
0.50	12800	2898	63000	1.00	**RF147**	**R77**	**DRN80M4**	435
					RM147			600
0.56	11600	2555	65300	1.10				
0.65	10000	2211	67800	1.30				
0.74	8830	1951	69300	1.45	**R147**			430
0.84	7590	1705	70700	1.70	**RF147**	**R77**	**DRN80M4**	435
0.94	6810	1536	71500	1.90	**RM147**			600
1.1	5890	1329	72300	2.2				
1.2	5140	1166	72900	2.5				
0.77	8340	1863	52500	0.95	**R137**			285
0.91	7060	1586	55300	1.15	**RF137**	**R77**	**DRN80M4**	310
1.0	6300	1391	56600	1.25	**RM137**			420
1.2	5670	1256	57500	1.40				
0.69	9380	2073	43000	0.85				
0.78	8240	1839	52900	0.95				
0.90	7090	1598	55200	1.15				
1.0	6300	1397	56600	1.25	**R137**			295
1.2	5500	1226	57800	1.45	**RF137**	**R77**	**DRN80M4**	320
1.3	4920	1090	58500	1.65	**RM137**			430
1.5	4290	951	59200	1.85				
1.7	3690	831	59800	2.2				
2.0	3210	730	60200	2.5				
0.93	6840	1555	43000	0.90	**R127**			265
1.0	6290	1444	43000	0.95	**RF127**	**R77**	**DRN80M4**	280
1.2	5330	1224	43000	1.15	**RM127**			375
0.89	7260	1620	43000	0.85				
1.0	6140	1380	43000	1.00	**R127**			250
1.2	5480	1210	43000	1.10	**RF127**	**R77**	**DRN80M4**	270
1.5	4310	961	43000	1.40	**RM127**			370
1.9	3440	773	43000	1.75				
2.4	2680	608	43000	2.2				

P_N = 0.75 kW

n_a min^{-1}	M_a Nm	i	F_{Ra} N	SEW f_B	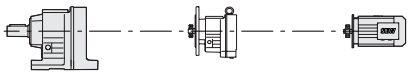			m kg
0.86	7450	1673	43000	0.80				
0.93	6930	1545	43000	0.85				
0.95	6730	1512	43000	0.90				
1.1	5710	1282	43000	1.05				
1.1	5820	1322	43000	1.05				
1.2	5270	1164	43000	1.15				
1.2	5270	1195	43000	1.15				
1.4	4460	1013	43000	1.35				
1.4	4500	1034	43000	1.35				
1.5	4060	935	43000	1.50				
1.5	4200	936	43000	1.45				
1.5	4470	987	43000	1.35				
1.7	3680	830	43000	1.65	**R127**			265
1.8	3440	792	43000	1.75	**RF127**	**R77**	**DRN80M4**	275
1.8	3560	794	43000	1.70	**RM127**			375
1.9	3330	750	43000	1.80				
1.9	3460	777	43000	1.75				
2.2	2810	642	43000	2.1				
2.2	2930	659	43000	2.1				
2.3	2820	636	43000	2.1				
2.4	2710	614	43000	2.2				
2.5	2540	581	43000	2.4				
2.8	2290	521	43000	2.6				
2.9	2160	492	43000	2.8				
3.0	2090	480	43000	2.9				
3.5	1770	407	43000	3.4				
3.7	1710	386	43000	3.5				
2.9	2250	490	43000	2.7	**R127**			250
3.7	1790	394	43000	3.4	**RF127**	**R77**	**DRN80M4**	270
					RM127			365
1.4	4730	1055	25800	0.90	**R107**			205
1.6	4130	919	30400	1.05	**RF107**	**R77**	**DRN80M4**	210
1.8	3680	815	32500	1.15	**RM107**			300
1.5	4200	939	30000	1.00				
1.8	3660	822	32500	1.20	**R107**			210
3.9	1640	369	37100	2.6	**RF107**	**R77**	**DRN80M4**	215
4.5	1430	323	37300	3.0	**RM107**			305
2.3	2860	632	21900	1.05				
2.6	2500	560	24100	1.20				
3.0	2170	484	25700	1.40				
3.3	1960	431	26500	1.55	**R97**			135
3.8	1720	379	27300	1.75	**RF97**	**R57**	**DRN80M4**	155
4.3	1530	336	27600	1.95	**RM97**			205
4.9	1340	296	27900	2.2				
5.8	1120	249	28100	2.7				
3.6	1780	398	15100	0.85				
4.1	1580	352	16700	1.00	**R87**			94
4.7	1360	305	18100	1.15	**RF87**	**R57**	**DRN80M4**	100
5.4	1200	268	18900	1.30	**RM87**			130
6.1	1060	236	19600	1.45				
4.0	1660	361	16100	0.95	**R87**			92
4.8	1370	300	18100	1.15	**RF87**	**R57**	**DRN80M4**	100
5.6	1160	256	19100	1.35	**RM87**			130
3.7	1910	255.71	25900	1.55	**R97**			120
4.0	1810	241.25	27100	1.65	**RF97**	**-**	**DRN90S6**	135
4.4	1620	216.28	27500	1.85	**RM97**			185

P_N = 0.75 kW

n_a min^{-1}	M_a Nm	i	F_{Ra} N	SEW f_B	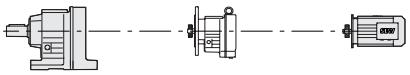			m kg
5.0	1440	289.74	27700	2.1				
5.6	1270	255.71	27900	2.4				
6.0	1200	241.25	28000	2.5	**R97**			115
6.7	1080	216.28	28200	2.8	**RF97**	-	**DRN80M4**	130
7.7	930	186.30	28300	3.2	**RM97**			180
8.5	850	170.02	28400	3.6				
4.4	1620	216.54	11500	0.95				
4.7	1540	205.71	12700	1.00	**R87**			77
5.3	1360	181.77	15300	1.15	**RF87**	-	**DRN90S6**	84
6.2	1160	155.34	18100	1.35	**RM87**			115
6.7	1070	142.41	19500	1.45				
5.8	1230	246.54	18800	1.25				
6.7	1080	216.54	19500	1.45				
7.0	1020	205.71	19700	1.50				
7.9	900	181.77	20000	1.70				
9.3	775	155.34	20000	2.0	**R87**			72
10	710	142.41	20000	2.2	**RF87**	-	**DRN80M4**	79
12	590	118.43*	20000	2.6	**RM87**			110
12	620	124.97	20000	2.5				
14	515	103.65	20000	3.0				
15	465	93.38	20000	3.3				
8.6	830	166.59	9840	1.00				
9.9	725	145.67	10700	1.15				
10	690	138.39	11000	1.20				
12	605	121.42	11500	1.35				
14	510	102.99	12000	1.60				
15	460	92.97	12200	1.75	**R77**			46
18	405	81.80	12500	2.0	**RF77**	-	**DRN80M4**	51
19	385	77.24	12500	2.1	**RM77**			76
22	325	65.77	12700	2.5				
25	285	57.68	12800	2.9				
28	260	52.07	12900	3.2				
31	230	45.81	13000	3.6				
33	215	43.26	13000	3.8				
11	640	128.97	7030	0.95				
13	565	113.94	7940	1.05				
14	525	105.83	8340	1.15				
15	475	95.91	8780	1.25				
17	430	86.11	9150	1.40	**R67**			38
19	370	74.17	9530	1.65	**RF67**	-	**DRN80M4**	41
21	345	69.75	9650	1.75	**RM67**			57
24	305	61.26	9860	1.95				
25	285	56.89	9960	2.1				
28	255	51.56	10100	2.3				
31	230	46.29	10200	2.6				

P_N = 0.75 kW

n_a min^{-1}	M_a Nm	i	F_{Ra} N	SEW f_B	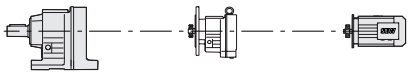			m kg
14	530	106.58	5570	0.85	**R57** **RF57** **RM57**	-	**DRN80M4**	32 35 47
15	490	98.99	6910	0.90				
16	445	89.71	7120	1.00				
18	400	80.55	7310	1.10				
21	345	69.23	7470	1.30				
22	325	64.85	7360	1.40				
25	285	57.29	7150	1.60				
27	265	53.22	7020	1.70				
30	240	48.23	6850	1.90				
33	215	43.30	6670	2.1				
39	186	37.30*	6410	2.4				
41	174	35.07	6310	2.6				
48	150	30.18	6060	3.0				
53	134	26.97	5870	3.4				
55	131	26.31	5830	3.4	**R57** **RF57** **RM57**	-	**DRN80M4**	31 34 46
58	124	24.99*	5750	3.6				
66	109	21.93	5540	4.1				
77	93	18.60*	5280	4.9				
21	340	68.54	4530	0.90	**R47** **RF47**	-	**DRN80M4**	26 27
22	320	64.21	5310	0.95				
25	280	56.73	5510	1.05				
27	260	52.69	5430	1.15				
30	235	47.75	5320	1.25				
34	215	42.87	5190	1.40				
39	184	36.93	5000	1.65				
41	173	34.73	4930	1.75				
48	149	29.88	4750	2.0				
54	133	26.70	4610	2.3				
61	117	23.59	4460	2.6				
54	133	26.74	4610	2.3	**R47** **RF47**	-	**DRN80M4**	26 26
62	116	23.28	4440	2.6				
66	108	21.81	4370	2.8				
75	96	19.27	4220	3.1				
80	89	17.89	4130	3.3				
89	81	16.22	4020	3.4				
30	240	48.08	3630	0.85	**R37** **RF37**	-	**DRN80M4**	23 24
32	225	44.81	4490	0.90				
37	195	39.17	4760	1.05				
39	183	36.72	4690	1.10				
44	161	32.40	4570	1.25				
50	143	28.73	4450	1.40				
59	121	24.42	4280	1.65				
65	111	22.27	4180	1.80	**R37** **RF37**	-	**DRN80M4**	22 24
75	96	19.31	4030	2.1				
80	90	18.05	3960	2.2				
92	78	15.60	3810	2.6				
109	66	13.25	3650	2.9				
122	59	11.83	3530	3.1				
142	50	10.11	3380	3.4				
152	47	9.47	3310	3.6				
50	143	28.78	2860	0.90	**R27** **RF27**	-	**DRN80M4**	17 17
59	122	24.47	2770	1.05				

P_N = 0.75 kW

n_a min^{-1}	M_a Nm	i	F_{Ra} N	SEW f_B	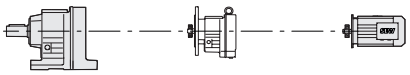			m kg
65	111	22.32	2730	1.15	**R27** **RF27**	-	**DRN80M4**	16 16
74	96	19.35	2650	1.35				
80	90	18.08	2610	1.45				
92	78	15.63	2520	1.65				
108	66	13.28*	2430	1.95				
121	59	11.86	2360	2.2				
142	50	10.13	2270	2.4				
153	47	9.41	2190	2.6				
177	41	8.16	2110	2.9				
189	38	7.63*	2070	3.0				
218	33	6.59	1990	3.2				
257	28	5.60*	1900	3.6				
288	25	5.00*	1840	3.8				
73	98	19.71	840	0.85	**R17** **RF17**	-	**DRN80M4**	16 15
85	85	16.99	1390	1.00				
91	79	15.84	1380	1.10				
104	69	13.84	1370	1.25				
111	65	12.98	1360	1.30				
126	57	11.45	1340	1.40				
142	50	10.15	1320	1.55				
167	43	8.63	1280	1.70				
191	38	7.55	1190	1.50				
205	35	7.04	1180	1.55				
234	31	6.15	1150	1.75				
250	29	5.76	1140	1.85				
283	25	5.09	1110	2.0				
319	22	4.51	1080	2.1				
376	19	3.83	1050	2.4				
249	29	11.45	1190	2.8	**R17** **RF17**	-	**DRN80MS2**	16 15
281	25	10.15	1150	3.0				
331	22	8.63	1110	3.3				
378	19	7.55	1040	3.0				
406	18	7.04	1030	3.1				
464	15	6.15	990	3.5				
495	14	5.76	980	3.7				
561	13	5.09	950	4.0				
633	11	4.51	920	4.2				
745	9.6	3.83	880	4.7				

P_N = 0.75 kW

n_a min^{-1}	M_a Nm	i	F_{Ra} N	SEW f_B	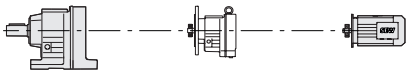			m kg
211	34	4.53	4180	2.4	**RX67** **RXF67**	-	**DRN90S6**	29 33
223	32	4.30*	4120	2.5				
254	28	3.77	3960	3.1				
299	24	3.20*	3770	4.2				

P_N = 0.75 kW

n_a min^{-1}	M_a Nm	i	F_{Ra} N	SEW f_B	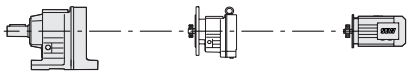			m kg
278	26	5.18	3850	2.9				
318	23	4.53	3700	3.6				
335	21	4.30*	3640	3.7				
382	19	3.77	3490	4.6				
450	16	3.20*	3320	6.3				
498	14	2.89	3210	7.4	**RX67 RXF67**	-	**DRN80M4**	25 29
567	13	2.54	3090	9.3				
600	12	2.40*	3030	10				
705	10	2.04	2880	13				
775	9.2	1.86	2790	13				
895	8	1.61	2660	14				
253	28	3.79	3180	2.4				
270	27	3.55*	3120	2.6				
305	23	3.14	3010	2.8	**RX57 RXF57**	-	**DRN90S6**	27 29
329	22	2.91	2940	3.1				
363	20	2.64*	2860	3.5				
331	22	4.35	2940	3.1				
380	19	3.79	2820	3.7				
406	18	3.55*	2760	3.9				
459	16	3.14	2660	4.2				
494	14	2.91	2600	4.6				
545	13	2.64*	2520	5.3	**RX57**	-	**DRN80M4**	22
608	12	2.37	2440	5.9	**RXF57**			24
705	10	2.04	2330	6.8				
750	9.6	1.92*	2280	7.2				
872	8.2	1.65	2180	8.4				
975	7.3	1.48	2100	9.3				
1105	6.5	1.30	2020	9.7				

P_N = 1.1 kW

n_a min^{-1}	M_a Nm	i	F_{Ra} N	SEW f_B	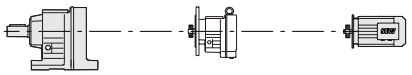			m kg
0.39	23000	3692	120000	0.85	**R167 RF167 RM167**	**R97**	**DRN90S4**	760 770 970
0.55	17200	2657	120000	1.15				
0.62	15000	2333	120000	1.35				
0.70	13300	2085	120000	1.50				
0.78	11800	1877	120000	1.70				
0.87	10500	1670	120000	1.90	**R167**			760
1.0	9300	1438	120000	2.2	**RF167**	**R97**	**DRN90S4**	770
1.1	8270	1279	120000	2.4	**RM167**			960
1.3	7210	1123	120000	2.8				
1.5	6410	999	120000	3.1				
1.7	5530	861	120000	3.6				
1.9	4900	760	120000	4.1				

P_N = 1.1 kW

n_a min^{-1}	M_a Nm	i	F_{Ra} N	SEW f_B	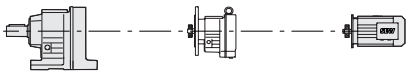			m kg
0.66	14700	2211	54200	0.90				
0.75	13000	1951	62700	1.00				
0.85	11200	1705	65900	1.15				
0.95	10100	1536	67700	1.30				
1.1	8700	1329	69500	1.50	**R147**			435
1.3	7600	1166	70700	1.70	**RF147**	**R77**	**DRN90S4**	440
1.4	6680	1029	71600	1.95	**RM147**			610
1.6	5790	889	72400	2.2				
1.9	5090	784	72900	2.6				
2.1	4490	695	73300	2.9				
1.1	9240	1391	45500	0.85				
1.2	8320	1256	52600	0.95	**R137**			290
1.3	7300	1105	54800	1.10	**RF137**	**R77**	**DRN90S4**	315
1.4	6880	1043	55600	1.15	**RM137**			425
1.6	5830	888	57300	1.35				
1.0	9260	1397	45200	0.85				
1.2	8090	1226	53200	1.00				
1.3	7220	1090	55000	1.10				
1.5	6300	951	56600	1.25	**R137**			300
1.8	5440	831	57800	1.45	**RF137**	**R77**	**DRN90S4**	325
2.0	4750	730	58700	1.70	**RM137**			435
2.3	4060	629	59400	1.95				
2.6	3680	560	59800	2.2				
3.0	3170	490	60200	2.5				
1.5	6350	961	43000	0.95	**R127**			255
1.9	5080	773	43000	1.20	**RF127**	**R77**	**DRN90S4**	275
2.4	3970	608	43000	1.50	**RM127**			375
1.4	6600	1013	43000	0.90				
1.4	6680	1034	43000	0.90				
1.5	6550	987	43000	0.90				
1.6	6040	935	43000	1.00				
1.6	6180	936	43000	0.95				
1.8	5120	792	43000	1.15				
1.8	5240	794	43000	1.15				
1.8	5440	830	43000	1.10				
1.9	4910	750	43000	1.20				
1.9	5100	777	43000	1.20				
2.2	4320	659	43000	1.40	**R127**			270
2.3	4170	636	43000	1.45	**RF127**	**R77**	**DRN90S4**	280
2.3	4170	642	43000	1.45	**RM127**			380
2.4	4000	614	43000	1.50				
2.5	3770	581	43000	1.60				
2.8	3390	521	43000	1.75				
3.0	3100	480	43000	1.95				
3.0	3200	492	43000	1.90				
3.6	2630	407	43000	2.3				
3.8	2530	386	43000	2.4				
4.9	1940	298	43000	3.1				
5.8	1640	253	43000	3.7				
3.0	3300	490	43000	1.80				
3.7	2640	394	43000	2.3	**R127**			255
4.5	2180	327	43000	2.8	**RF127**	**R77**	**DRN90S4**	275
5.6	1710	259	43000	3.5	**RM127**			370
2.0	4730	717	25600	0.90	**R107**			210
					RF107	**R77**	**DRN90S4**	215
					RM107			305

P_N = 1.1 kW

n_a min^{-1}	M_a Nm	i	F_{Ra} N	SEW f_B	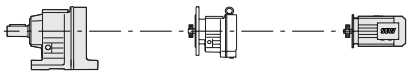			m kg
2.4	3990	614	31100	1.10				
2.7	3520	544	33100	1.20				
3.0	3180	492	34300	1.35				
3.5	2700	417	35900	1.60	**R107**			215
4.0	2410	369	36300	1.80	**RF107**	**R77**	**DRN90S4**	220
4.5	2110	323	36700	2.0	**RM107**			310
5.1	1850	285	36900	2.3				
5.8	1630	253	37100	2.6				
3.4	2870	431	21800	1.05				
3.8	2520	379	24000	1.20				
4.3	2240	336	25400	1.35	**R97**			140
4.9	1970	296	26500	1.55	**RF97**	**R57**	**DRN90S4**	160
5.8	1640	249	27400	1.80	**RM97**			210
6.2	1530	234	27600	1.95				
7.0	1370	209	27800	2.2				
5.4	1770	268	15200	0.90	**R87**			100
6.2	1560	236	16800	1.00	**RF87**	**R57**	**DRN90S4**	105
7.0	1370	209	18100	1.15	**RM87**			135
5.7	1710	256	15700	0.90	**R87**			99
6.3	1550	232	16900	1.00	**RF87**	**R57**	**DRN90S4**	105
7.5	1310	195	18400	1.20	**RM87**			135
					R97			120
4.4	2370	216.28	20500	1.25	**RF97**	-	**DRN90L6**	140
5.1	2040	186.30	24300	1.45	**RM97**			190
5.7	1850	255.71	27000	1.65				
6.0	1740	241.25	27300	1.70				
6.7	1560	216.28	27600	1.90				
7.8	1340	186.30	27900	2.2	**R97**			120
8.6	1230	170.02	28000	2.4	**RF97**	-	**DRN90S4**	135
9.7	1090	150.78	28100	2.8	**RM97**			185
11	920	126.75	28300	3.3				
12	840	116.48	28400	3.6				
6.7	1560	216.54	16800	1.00				
7.1	1490	205.71	17400	1.05				
8.0	1310	181.77	18400	1.20				
9.4	1120	155.34	19300	1.40				
10	1030	142.41	19700	1.50				
12	850	118.43*	20000	1.80				
12	900	124.97	20000	1.70	**R87**			77
14	750	103.65	20000	2.1	**RF87**	-	**DRN90S4**	84
16	675	93.38	20000	2.3	**RM87**			115
18	590	81.92	20000	2.6				
20	525	72.57	20000	3.0				
23	460	63.68*	20000	3.4				
24	435	60.35*	20000	3.6				
28	380	52.82	20000	4.1				

P_N = 1.1 kW

n_a min^{-1}	M_a Nm	i	F_{Ra} N	SEW f_B	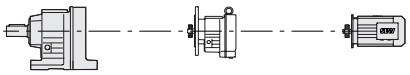			m kg
12	880	121.42	9360	0.95	**R77** **RF77** **RM77**	-	**DRN90S4**	50 56 81
14	745	102.99	10600	1.10				
16	670	92.97	11100	1.20				
18	590	81.80	11600	1.40				
19	560	77.24	11800	1.45				
22	475	65.77	12200	1.75				
25	415	57.68	12400	1.95				
28	375	52.07	12600	2.2				
32	330	45.81	12700	2.5				
34	310	43.26	12800	2.6				
40	265	36.83	12900	3.1				
43	240	33.47	12900	3.4				
17	620	86.11	7290	0.95	**R67** **RF67** **RM67**	-	**DRN90S4**	45 48 64
20	535	74.17	8260	1.10				
21	505	69.75	8550	1.20				
24	440	61.26	9050	1.35				
26	410	56.89	9270	1.45				
28	370	51.56	9510	1.60				
31	335	46.29	9720	1.80				
36	290	39.88*	9940	2.0				
39	270	37.50	10000	2.1				
45	235	32.27	10200	2.3				
50	210	28.83	10200	2.5				
52	205	28.13	10100	2.7	**R67** **RF67** **RM67**	-	**DRN90S4**	44 47 63
54	193	26.72	10000	2.8				
62	169	23.44	9620	3.3				
73	144	19.89	9160	4.2				
21	500	69.23	6720	0.90	**R57** **RF57** **RM57**	-	**DRN90S4**	38 41 53
22	470	64.85	6800	0.95				
25	415	57.29	6660	1.10				
27	385	53.22	6560	1.15				
30	350	48.23	6440	1.30				
34	315	43.30	6290	1.45				
39	270	37.30*	6090	1.65				
41	255	35.07	6000	1.80				
48	220	30.18	5790	2.1				
54	195	26.97	5630	2.3				
55	190	26.31	5600	2.4	**R57** **RF57** **RM57**	-	**DRN90S4**	37 40 52
58	180	24.99*	5530	2.5				
66	158	21.93	5340	2.8				
78	134	18.60*	5110	3.4				
87	121	16.79	4970	3.7				
30	345	47.75	4310	0.85	**R47** **RF47**	-	**DRN90S4**	33 33
34	310	42.87	4810	0.95				
39	265	36.93	4680	1.15				
42	250	34.73	4630	1.20				
49	215	29.88	4480	1.40				
54	193	26.70	4370	1.55				
62	170	23.59	4250	1.75				

P_N = 1.1 kW

n_a min^{-1}	M_a Nm	i	F_{Ra} N	SEW f_B	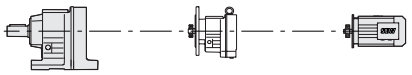			m kg
63	168	23.28	4240	1.80				
67	157	21.81	4170	1.90				
76	139	19.27	4050	2.1				
81	129	17.89	3970	2.2				
90	117	16.22	3870	2.4	**R47**	-	**DRN90S4**	32
100	105	14.56	3760	2.5	**RF47**			32
116	91	12.54	3620	2.8				
123	85	11.79	3550	2.9				
143	73	10.15	3410	3.1				
160	65	9.07	3300	3.4				
45	235	32.40	3040	0.85				
51	205	28.73	3410	0.95	**R37**	-	**DRN90S4**	28
60	176	24.42	3800	1.15	**RF37**			30
75	139	19.31	3810	1.45				
81	130	18.05	3750	1.55				
93	113	15.60	3630	1.80				
110	96	13.25	3490	2.0				
123	85	11.83	3390	2.1				
144	73	10.11	3260	2.3	**R37**	-	**DRN90S4**	28
154	68	9.47	3200	2.4	**RF37**			30
182	58	7.97	3060	2.7				
218	48	6.67	2890	3.0				
257	41	5.67	2760	3.5				
288	37	5.06	2670	3.7				
75	140	19.35	2420	0.95				
80	131	18.08	2400	1.00				
93	113	15.63	2340	1.15				
110	96	13.28*	2270	1.35				
123	86	11.86	2220	1.50				
144	73	10.13	2150	1.65				
155	68	9.41	2060	1.80				
178	59	8.16	1990	1.95	**R27**	-	**DRN90S4**	22
191	55	7.63*	1960	2.0	**RF27**			22
221	48	6.59	1900	2.2				
260	40	5.60*	1830	2.5				
291	36	5.00*	1770	2.6				
341	31	4.27	1700	2.8				
364	29	4.00*	1670	2.9				
432	24	3.37	1600	3.3				
215	49	13.28*	1950	2.7				
241	44	11.86	1890	3.0				
282	37	10.13	1820	3.3				
304	35	9.41	1750	3.5				
351	30	8.16	1690	3.9				
375	28	7.63*	1660	4.0	**R27**	-	**DRN80M2**	16
434	24	6.59	1590	4.4	**RF27**			16
511	21	5.60*	1520	4.8				
572	18	5.00*	1480	5.2				
670	16	4.27	1410	5.6				
715	15	4.00*	1380	5.8				
849	12	3.37	1320	6.4				

P_N = 1.1 kW

n_a min^{-1}	M_a Nm	i	F_{Ra} N	SEW f_B	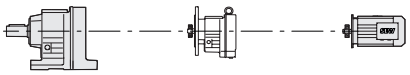			m kg
145	72	19.71	1150	1.15				
168	62	16.99	1140	1.35				
181	58	15.84	1130	1.45				
207	51	13.84	1120	1.65				
220	48	12.98	1110	1.80				
250	42	11.45	1090	1.95				
282	37	10.15	1070	2.1				
331	32	8.63	1040	2.3	**R17 RF17**	-	**DRN80M2**	16 15
379	28	7.55	960	2.0				
407	26	7.04	950	2.1				
465	23	6.15	930	2.4				
496	21	5.76	920	2.5				
562	19	5.09	900	2.7				
634	17	4.51	870	2.9				
746	14	3.83	840	3.2				

P_N = 1.1 kW

n_a min^{-1}	M_a Nm	i	F_{Ra} N	SEW f_B	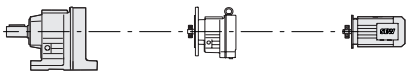			m kg
258	41	5.63	5610	2.7				
272	39	5.35*	5520	2.7	**RX77 RXF77**	-	**DRN90S4**	41 43
308	34	4.73	5320	3.6				
254	41	3.77	3880	2.1	**RX67 RXF67**	-	**DRN90L6**	34 38
321	33	4.53	3620	2.5				
338	31	4.30*	3560	2.6				
386	27	3.77	3430	3.2				
455	23	3.20*	3260	4.3				
504	21	2.89	3160	5.1				
572	18	2.54	3040	6.4	**RX67 RXF67**	-	**DRN90S4**	31 35
606	17	2.40*	2980	7.1				
712	15	2.04	2840	9.1				
783	13	1.86	2750	9.4				
904	12	1.61	2630	9.8				
1040	10	1.40*	2510	10				
305	34	3.14	2930	1.90	**RX57 RXF57**	-	**DRN90L6**	32 34
363	29	2.64*	2790	2.4				
384	27	3.79	2750	2.5				
410	26	3.55*	2700	2.7				
464	23	3.14	2600	2.9				
499	21	2.91	2540	3.2				
551	19	2.64*	2470	3.6				
614	17	2.37	2390	4.0	**RX57 RXF57**	-	**DRN90S4**	29 30
713	15	2.04	2280	4.7				
758	14	1.92*	2240	5.0				
881	12	1.65	2140	5.8				
986	11	1.48	2070	6.4				
1115	9.4	1.30	1990	6.7				

P_N = 1.5 kW

n_a min^{-1}	M_a Nm	i	F_{Ra} N	SEW f_B	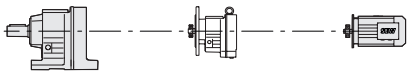			m kg
0.55	23600	2657	120000	0.85				
0.63	20600	2333	120000	0.95				
0.70	18300	2085	120000	1.10				
0.78	16400	1877	120000	1.20				
0.87	14600	1670	120000	1.35	**R167**			760
1.0	12800	1438	120000	1.55	**RF167**	**R97**	**DRN90L4**	770
1.1	11400	1279	120000	1.75	**RM167**			970
1.3	9940	1123	120000	2.0				
1.5	8840	999	120000	2.3				
1.7	7620	861	120000	2.6				
1.9	6750	760	120000	3.0				
3.4	3770	426	73700	3.5	**R147**			455
4.0	3260	368	73900	4.0	**RF147**	**R87**	**DRN90L4**	465
					RM147			630
0.86	15300	1705	45900	0.85				
0.95	13800	1536	61000	0.95				
1.1	11900	1329	64700	1.10				
1.3	10400	1166	67100	1.25	**R147**			435
1.4	9180	1029	68900	1.40	**RF147**	**R77**	**DRN90L4**	445
1.6	7960	889	70400	1.65	**RM147**			610
1.9	7000	784	71300	1.85				
2.1	6180	695	72100	2.1				
2.4	5570	619	72500	2.3				
2.6	5010	558	72900	2.6				
1.4	9420	1043	42400	0.85	**R137**			295
1.6	8000	888	53400	1.00	**RF137**	**R77**	**DRN90L4**	320
2.1	6260	699	56600	1.30	**RM137**			430
2.4	5430	609	57800	1.45				
1.3	9870	1090	32900	0.80				
1.5	8620	951	51300	0.95				
1.8	7470	831	54500	1.05				
2.0	6530	730	56200	1.25	**R137**			305
2.3	5590	629	57600	1.45	**RF137**	**R77**	**DRN90L4**	325
2.6	5040	560	58400	1.60	**RM137**			440
3.0	4360	490	59100	1.85				
3.4	3810	428	59700	2.1				
3.8	3430	381	60000	2.3				
4.5	2910	323	60400	2.8				
1.9	6960	773	43000	0.85	**R127**			260
2.4	5450	608	43000	1.10	**RF127**	**R77**	**DRN90L4**	280
					RM127			375

P_N = 1.5 kW

n_a min^{-1}	M_a Nm	i	F_{Ra} N	SEW f_B	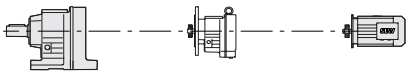			m kg
1.8	7050	792	43000	0.85				
1.8	7170	794	43000	0.85				
1.8	7460	830	43000	0.80				
1.9	6990	777	43000	0.85				
2.0	6740	750	43000	0.90				
2.2	5930	659	43000	1.00				
2.3	5710	636	43000	1.05				
2.3	5730	642	43000	1.05	**R127**			275
2.4	5500	614	43000	1.10	**RF127**	**R77**	**DRN90L4**	285
2.5	5180	581	43000	1.15	**RM127**			380
2.8	4660	521	43000	1.30				
3.0	4270	480	43000	1.40				
3.0	4390	492	43000	1.35				
3.6	3620	407	43000	1.65				
3.8	3460	386	43000	1.75				
4.9	2660	298	43000	2.3				
5.8	2260	253	43000	2.7				
3.0	4500	490	43000	1.35				
3.7	3610	394	43000	1.65	**R127**			260
4.5	2980	327	43000	2.0	**RF127**	**R77**	**DRN90L4**	280
5.7	2340	259	43000	2.6	**RM127**			375
7.2	1820	202	43000	3.3				
2.8	4730	528	25800	0.90	**R107** **RF107** **RM107**	**R77**	**DRN90L4**	210 220 305
2.7	4840	544	21300	0.90				
3.0	4380	492	29000	1.00	**R107**			220
3.5	3710	417	32300	1.15	**RF107**	**R77**	**DRN90L4**	225
4.0	3310	369	33900	1.30	**RM107**			310
4.5	2900	323	35300	1.50				
3.1	4310	469	29400	1.00	**R107** **RF107** **RM107**	**R77**	**DRN90L4**	210 215 305
4.3	3060	336	17400	1.00				
4.9	2690	296	23000	1.10	**R97**			145
5.9	2250	249	25300	1.35	**RF97**	**R57**	**DRN90L4**	165
6.3	2100	234	26000	1.45	**RM97**			215
7.0	1880	209	26800	1.60				
3.8	3740	251.15	32200	1.15				
4.2	3430	229.95	33400	1.25	**R107**			190
4.7	3030	203.16	34900	1.40	**RF107**	**-**	**DRN100L6**	195
5.6	2570	172.34	36100	1.65	**RM107**			285
6.1	2370	158.68	36300	1.80				
6.8	2110	141.83	36600	2.0				
5.7	2510	255.71	24000	1.20				
6.1	2370	241.25	24800	1.25				
6.8	2120	216.28	25900	1.40				
7.8	1830	186.30	27000	1.65	**R97**			120
8.6	1670	170.02	27400	1.80	**RF97**	**-**	**DRN90L4**	140
9.7	1480	150.78	27700	2.0	**RM97**			190
12	1240	126.75	28000	2.4				
13	1140	116.48	28100	2.6				
14	1010	103.44	28200	3.0				
16	910	92.48	28300	3.3				

P_N = 1.5 kW

n_a min^{-1}	M_a Nm	i	F_{Ra} N	SEW f_B	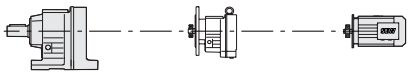			m kg
8.0	1780	181.77	15100	0.85				
9.4	1520	155.34	17100	1.00				
10	1400	142.41	17900	1.10				
12	1160	118.43*	19200	1.35				
12	1230	124.97	18800	1.25				
14	1020	103.65	19800	1.55				
16	920	93.38	20000	1.70	**R87**			80
18	800	81.92	20000	1.95	**RF87**	-	**DRN90L4**	87
20	710	72.57	20000	2.2	**RM87**			115
23	625	63.68*	20000	2.5				
24	590	60.35*	20000	2.6				
28	520	52.82	20000	3.0				
31	465	47.58	20000	3.3				
35	410	41.74	20000	3.8				
40	360	36.84*	19400	4.3				
16	910	92.97	8980	0.90				
18	800	81.80	10100	1.00				
19	755	77.24	10500	1.10				
22	645	65.77	11300	1.25				
25	565	57.68	11700	1.45				
28	510	52.07	12000	1.60	**R77**			54
32	450	45.81	12300	1.85	**RF77**	-	**DRN90L4**	59
34	425	43.26	12400	1.95	**RM77**			84
40	360	36.83	12600	2.3				
44	330	33.47	12700	2.5				
50	285	29.00	12400	2.9				
58	245	25.23	11900	3.2				
63	230	23.37	11600	3.6	**R77**			52
68	210	21.43	11400	3.9	**RF77**	-	**DRN90L4**	58
78	184	18.80	10900	4.2	**RM77**			83
24	600	61.26	7550	1.00				
26	560	56.89	8030	1.10				
28	505	51.56	8530	1.20				
32	455	46.29	8960	1.30	**R67**			48
37	390	39.88*	9390	1.50	**RF67**	-	**DRN90L4**	51
39	370	37.50	9530	1.55	**RM67**			67
45	315	32.27	9810	1.70				
51	285	28.83	9960	1.85				
52	275	28.13	9890	1.95				
55	260	26.72	9760	2.1	**R67**			47
62	230	23.44	9410	2.4	**RF67**	-	**DRN90L4**	50
73	195	19.89	8980	3.1	**RM67**			66
81	176	17.95	8720	3.4				
27	520	53.22	5900	0.85				
30	475	48.23	5980	0.95				
34	425	43.30	5880	1.05	**R57**			41
39	365	37.30*	5730	1.25	**RF57**	-	**DRN90L4**	45
42	345	35.07	5670	1.30	**RM57**			57
48	295	30.18	5500	1.50				
54	265	26.97	5380	1.70				

P_N = 1.5 kW

n_a min^{-1}	M_a Nm	i	F_{Ra} N	SEW f_B	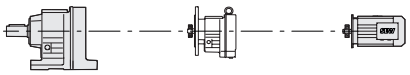			m kg
56	260	26.31	5350	1.75	**R57 RF57 RM57**	-	**DRN90L4**	40
58	245	24.99*	5290	1.85				
67	215	21.93	5130	2.1				
79	182	18.60*	4930	2.5				44
87	165	16.79	4810	2.7				
99	145	14.77*	4650	3.0				56
105	137	13.95*	4590	3.1				
123	116	11.88	4390	3.5				
40	360	36.93	3260	0.85	**R47 RF47**	-	**DRN90L4**	36
42	340	34.73	4290	0.90				
49	295	29.88	4190	1.00				
55	260	26.70	4110	1.15				36
62	230	23.59	4020	1.30				
63	230	23.28	4010	1.30	**R47 RF47**	-	**DRN90L4**	35
67	215	21.81	3960	1.40				
76	189	19.27	3860	1.55				
82	175	17.89	3800	1.65				
90	159	16.22	3710	1.75				
100	143	14.56	3620	1.85				
116	123	12.54	3490	2.0				
124	116	11.79	3440	2.1				
144	100	10.15	3310	2.3				
161	89	9.07	3210	2.5				35
182	79	8.01	3110	2.6				
188	76	7.76*	3040	2.1				
210	68	6.96	2950	2.3				
244	59	6.00	2830	2.7				
259	55	5.64*	2790	2.8				
301	48	4.85	2670	3.2				
337	43	4.34	2590	3.4				
381	38	3.83	2500	3.8				
76	189	19.31	2760	1.05	**R37 RF37**	-	**DRN90L4**	31
81	177	18.05	2930	1.15				
94	153	15.60	3230	1.30				
110	130	13.25	3320	1.45				
123	116	11.83	3240	1.60				
145	99	10.11	3130	1.70				
154	93	9.47	3080	1.80				
183	78	7.97	2950	2.0				33
219	65	6.67	2800	2.2				
258	56	5.67	2680	2.6				
289	50	5.06	2600	2.7				
338	42	4.32	2490	3.0				
361	40	4.05	2450	3.1				
429	33	3.41	2330	3.4				
219	65	13.25	2820	2.9	**R37 RF37**	-	**DRN90S2**	28
246	58	11.83	2740	3.1				
288	50	10.11	2630	3.4				
307	47	9.47	2580	3.6				30
365	39	7.97	2460	4.0				

P_N = 1.5 kW

n_a min^{-1}	M_a Nm	i	F_{Ra} N	SEW f_B	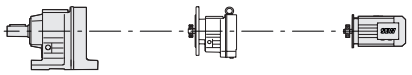			m kg
93	153	15.63	1780	0.85				
110	130	13.28*	2080	1.00				
123	116	11.86	2070	1.10				
144	99	10.13	2010	1.25				
179	80	8.16	1870	1.45				
192	75	7.63*	1850	1.50	**R27**	-	**DRN90L4**	25
222	65	6.59	1800	1.65	**RF27**			25
261	55	5.60*	1740	1.80				
292	49	5.00*	1700	1.95				
342	42	4.27	1640	2.1				
365	39	4.00*	1610	2.2				
434	33	3.37	1540	2.4				
245	58	11.86	1810	2.2				
287	50	10.13	1740	2.5				
356	40	8.16	1620	2.9				
381	38	7.63*	1590	3.0				
441	32	6.59	1540	3.3	**R27**	-	**DRN90S2**	22
519	28	5.60*	1470	3.6	**RF27**			22
582	25	5.00*	1430	3.9				
681	21	4.27	1370	4.1				
727	20	4.00*	1350	4.3				
863	17	3.37	1280	4.8				

P_N = 1.5 kW

n_a min^{-1}	M_a Nm	i	F_{Ra} N	SEW f_B	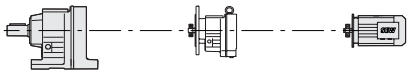			m kg
259	55	5.63	5520	2.0				
273	52	5.35*	5440	1.95				
309	46	4.73	5240	2.7				
362	40	4.04*	4990	3.6				
394	36	3.70	4860	4.2	**RX77**	-	**DRN90L4**	44
450	32	3.25*	4670	5.7	**RXF77**			46
474	30	3.08*	4590	6.4				
542	26	2.70	4410	8.1				
602	24	2.43	4260	9.0				
323	44	4.53	3540	1.85				
340	42	4.30*	3490	1.90				
387	37	3.77	3360	2.4				
457	31	3.20*	3200	3.2				
506	28	2.89	3100	3.7				
575	25	2.54	2990	4.7	**RX67**	-	**DRN90L4**	34
609	24	2.40*	2940	5.2	**RXF67**			38
715	20	2.04	2790	6.7				
787	18	1.86	2710	6.9				
908	16	1.61	2590	7.2				
1045	14	1.40*	2480	7.6				

P_N = 1.5 kW

n_a min^{-1}	M_a Nm	i	F_{Ra} N	SEW f_B	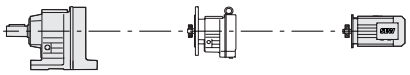			m kg
386	37	3.79	2670	1.85				
412	35	3.55*	2630	2.0				
466	31	3.14	2540	2.1				
502	29	2.91	2480	2.4				
553	26	2.64*	2410	2.7	**RX57**			32
616	23	2.37	2340	3.0	**RXF57**	**-**	**DRN90L4**	34
716	20	2.04	2240	3.5				
761	19	1.92*	2200	3.7				
884	16	1.65	2100	4.3				
990	14	1.48	2030	4.7				
1120	13	1.30	1960	4.9				

P_N = 2.2 kW

n_a min^{-1}	M_a Nm	i	F_{Ra} N	SEW f_B	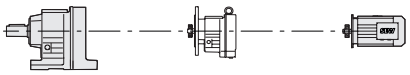			m kg
0.78	24100	1849	120000	0.85	**R167**			820
0.87	21700	1674	120000	0.90	**RF167**	**R107**	**DRN100LS4**	820
					RM167			1020
0.77	24700	1877	120000	0.80				
0.87	21900	1670	120000	0.90				
1.0	19100	1438	120000	1.05				
1.1	17000	1279	120000	1.15	**R167**			770
1.3	14900	1123	120000	1.35	**RF167**	**R97**	**DRN100LS4**	780
1.5	13300	999	120000	1.50	**RM167**			970
1.7	11400	861	120000	1.75				
1.9	10100	760	120000	2.0				
2.2	8470	656	120000	2.4				
2.7	6990	533	71300	1.85				
3.1	6010	462	72200	2.2	**R147**			460
3.4	5650	426	72500	2.3	**RF147**	**R87**	**DRN100LS4**	470
3.9	4880	368	73000	2.7	**RM147**			640
4.5	4320	326	73400	3.0				
1.2	15600	1166	42600	0.85				
1.4	13700	1029	61200	0.95				
1.6	11900	889	64800	1.10	**R147**			440
1.9	10500	784	67100	1.25	**RF147**	**R77**	**DRN100LS4**	450
2.1	9250	695	68800	1.40	**RM147**			620
2.3	8310	619	70000	1.55				
2.6	7470	558	70900	1.75				
3.0	6540	489	71800	2.0				
2.1	9350	699	43700	0.85	**R137**			300
2.4	8120	609	53100	1.00	**RF137**	**R77**	**DRN100LS4**	325
					RM137			435
2.0	9750	730	35900	0.80				
2.3	8360	629	52400	0.95				
2.6	7510	560	54400	1.05				
3.0	6520	490	56200	1.25	**R137**			310
3.4	5700	428	57500	1.40	**RF137**	**R77**	**DRN100LS4**	330
3.8	5110	381	58300	1.55	**RM137**			445
4.5	4340	323	59200	1.85				
5.0	3900	291	59600	2.1				
5.7	3410	255	60000	2.3				
6.5	2990	223	60400	2.7				

P_N = 2.2 kW

n_a min^{-1}	M_a Nm	i	F_{Ra} N	SEW f_B	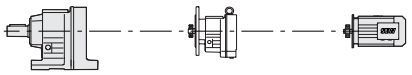			m kg
2.8	6950	521	43000	0.85				
2.9	6570	492	43000	0.90				
3.0	6390	480	43000	0.95	**R127**			280
3.6	5420	407	43000	1.10	**RF127**	**R77**	**DRN100LS4**	290
3.8	5160	386	43000	1.15	**RM127**			385
4.9	3980	298	43000	1.50				
5.7	3370	253	43000	1.80				
3.0	6690	490	43000	0.90				
3.7	5370	394	43000	1.10				
4.4	4440	327	43000	1.35	**R127**			260
5.6	3500	259	43000	1.70	**RF127**	**R77**	**DRN100LS4**	285
7.2	2720	202	43000	2.2	**RM127**			380
8.9	2200	162	43000	2.7				
12	1700	126	43000	3.5				
4.5	4320	323	29300	1.00	**R107**			220
5.1	3810	285	31900	1.15	**RF107**	**R77**	**DRN100LS4**	230
5.7	3370	253	33700	1.30	**RM107**			315
6.8	2850	214	35400	1.50				
4.5	4410	325	28800	0.95	**R107** **RF107** **RM107**	**R77**	**DRN100LS4**	215 220 310
6.9	2800	209	22300	1.05	**R97** **RF97** **RM97**	**R57**	**DRN100LS4**	150 165 220
5.5	3810	262.65	43000	1.60				
6.0	3480	240.48	43000	1.70				
6.8	3080	212.46	43000	1.95				
8.1	2610	180.23	43000	2.3	**R127**			240
8.7	2400	165.95	43000	2.5	**RF127**	**-**	**DRN100LS4**	250
9.8	2150	148.33	43000	2.8	**RM127**			345
11	1930	133.53	43000	3.1				
12	1750	120.92	43000	3.4				
14	1550	107.23	43000	3.9				
4.8	4390	203.16	29000	1.00	**R107**			200
5.7	3720	172.34	32300	1.15	**RF107**	**-**	**DRN112M6**	205
6.1	3430	158.68	33500	1.25	**RM107**			295
6.9	3060	141.83	34700	1.40				
5.8	3640	251.15	32600	1.20				
6.3	3330	229.95	33800	1.30				
7.1	2940	203.16	35100	1.45				
8.4	2500	172.34	36200	1.70				
9.1	2300	158.68	36400	1.85	**R107**			185
10	2050	141.83	36700	2.1	**RF107**	**-**	**DRN100LS4**	190
11	1850	127.68	36900	2.3	**RM107**			275
13	1680	115.63	37100	2.6				
14	1490	102.53	37200	2.9				
16	1340	92.70	37400	3.2				

P_N = 2.2 kW

n_a min^{-1}	M_a Nm	i	F_{Ra} N	SEW f_B	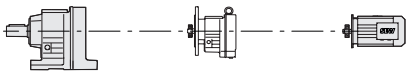			m kg
6.7	3130	216.28	13800	0.95				
7.8	2700	186.30	22900	1.10				
8.5	2460	170.02	24300	1.20				
9.6	2180	150.78	25600	1.35				
11	1840	126.75	27000	1.65				
12	1690	116.48	27400	1.80				
14	1500	103.44	27700	2.0	**R97**			125
16	1340	92.48	27900	2.2	**RF97**	-	**DRN100LS4**	145
17	1200	83.15	28000	2.5	**RM97**			195
20	1050	72.17	28200	2.9				
22	940	65.21	27500	3.2				
24	870	59.92	26800	3.5				
27	770	53.21	25900	3.9				
30	690	47.58	25000	4.4				
12	1720	118.43*	15700	0.90				
12	1810	124.97	13900	0.85				
14	1500	103.65	17300	1.05				
16	1350	93.38	18200	1.15				
18	1190	81.92	19000	1.30				
20	1050	72.57	19600	1.45	**R87**			85
23	920	63.68*	20000	1.70	**RF87**	-	**DRN100LS4**	92
24	870	60.35*	20000	1.75	**RM87**			120
27	765	52.82	20000	2.0				
30	690	47.58	20000	2.3				
35	605	41.74	19700	2.6				
39	535	36.84*	19000	2.9				
44	475	32.66*	18400	3.3				
42	500	34.40*	18700	3.0				
46	455	31.40	18200	3.4	**R87**			83
52	405	27.84*	17500	3.8	**RF87**	-	**DRN100LS4**	90
62	340	23.40	16700	4.6	**RM87**			120
67	310	21.51	16200	4.8				
22	950	65.77	7910	0.85				
25	840	57.68	9770	1.00				
28	755	52.07	10500	1.10				
32	665	45.81	11200	1.25	**R77**			58
34	625	43.26	11400	1.30	**RF77**	-	**DRN100LS4**	64
39	535	36.83	11900	1.55	**RM77**			89
43	485	33.47	12100	1.70				
50	420	29.00	12000	1.95				
57	365	25.23	11600	2.1				
62	340	23.37	11400	2.4				
68	310	21.43	11100	2.6	**R77**			57
77	270	18.80	10700	2.9	**RF77**	-	**DRN100LS4**	62
81	260	17.82*	10500	3.0	**RM77**			87
93	225	15.60	10100	3.3				
103	205	14.05	9830	3.5				
36	580	39.88*	7820	1.00	**R67**			52
39	545	37.50	8180	1.05	**RF67**	-	**DRN100LS4**	55
45	470	32.27	8850	1.15	**RM67**			71
50	420	28.83	9220	1.25				

P_N = 2.2 kW

n_a min^{-1}	M_a Nm	i	F_{Ra} N	SEW f_B	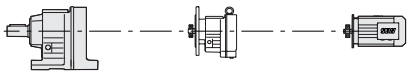			m kg
62	340	23.44	9070	1.65	**R67**	-	**DRN100LS4**	51
73	290	19.89	8700	2.1	**RF67**	-	**DRN100LS4**	54
81	260	17.95	8470	2.3	**RM67**	-	**DRN100LS4**	70
92	230	15.79	8180	2.5				
97	215	14.91	8050	2.6				
114	184	12.70	7700	2.8				
126	167	11.54	7500	3.0				
145	145	10.00	7190	3.2				
167	126	8.70*	6910	3.5				
186	113	7.79	6700	3.4				
39	540	37.30*	5130	0.85	**R57**	-	**DRN100LS4**	45
41	510	35.07	5100	0.90	**RF57**	-	**DRN100LS4**	48
48	435	30.18	5010	1.05	**RM57**	-	**DRN100LS4**	60
54	390	26.97	4940	1.15				
66	320	21.93	4780	1.40	**R57**	-	**DRN100LS4**	44
78	270	18.60*	4630	1.65	**RF57**	-	**DRN100LS4**	48
86	245	16.79	4540	1.85	**RM57**	-	**DRN100LS4**	60
98	215	14.77*	4420	2.0				
104	200	13.95*	4360	2.1				
122	172	11.88	4210	2.4				
134	156	10.79	4110	2.5				
155	135	9.35	3970	2.7				
160	131	9.06	3950	2.9				
182	116	7.97	3820	3.1				
132	159	21.93	4130	2.8	**R57**	-	**DRN90L2**	40
156	135	18.60*	3960	3.4	**RF57**	-	**DRN90L2**	44
173	121	16.79	3860	3.7	**RM57**	-	**DRN90L2**	56
197	107	14.77*	3730	4.1				
208	101	13.95*	3680	4.3				
75	280	19.27	3540	1.05	**R47**	-	**DRN100LS4**	39
89	235	16.22	3450	1.15	**RF47**	-	**DRN100LS4**	39
100	210	14.56	3380	1.25				
116	182	12.54	3290	1.40				
123	171	11.79	3250	1.45				
143	147	10.15	3140	1.55				
160	131	9.07	3070	1.65				
181	116	8.01	2980	1.75				
187	112	7.76*	2890	1.45				
208	101	6.96	2820	1.60				
242	87	6.00	2720	1.80				
257	82	5.64*	2680	1.90				
299	70	4.85	2580	2.1				
334	63	4.34	2510	2.3				
378	56	3.83	2430	2.6				
151	139	19.27	3110	2.1	**R47**	-	**DRN90L2**	35
179	117	16.22	2990	2.3	**RF47**	-	**DRN90L2**	35
200	105	14.56	2910	2.5				
232	91	12.54	2800	2.8				
246	85	11.79	2760	2.9				
286	73	10.15	2650	3.1				
320	66	9.07	2570	3.4				
363	58	8.01	2490	3.5				

P_N = 2.2 kW

n_a min^{-1}	M_a Nm	i	F_{Ra} N	SEW f_B	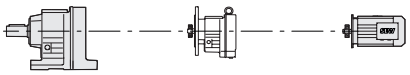			m kg
93	225	15.60	1180	0.90				
109	192	13.25	1740	1.00				
123	171	11.83	2060	1.05				
143	146	10.11	2410	1.15				
153	137	9.47	2530	1.20				
182	116	7.97	2790	1.35	**R37**	-	**DRN100LS4**	35
217	97	6.67	2500	1.50	**RF37**			37
256	82	5.67	2550	1.75				
287	73	5.06	2490	1.85				
336	63	4.32	2400	2.0				
358	59	4.05	2360	2.1				
425	49	3.41	2260	2.3				
186	113	15.60	2770	1.75				
219	96	13.25	2680	2.0				
245	86	11.83	2610	2.1				
287	73	10.11	2520	2.3				
307	68	9.47	2480	2.4				
364	58	7.97	2370	2.7	**R37**	-	**DRN90L2**	31
436	48	6.67	2240	3.0	**RF37**			33
513	41	5.67	2150	3.5				
574	37	5.06	2080	3.7				
672	31	4.32	1990	4.0				
718	29	4.05	1960	4.2				
852	25	3.41	1870	4.5				
143	147	10.13	1180	0.85				
220	95	6.59	1180	1.10				
259	81	5.60*	1430	1.20	**R27**	-	**DRN100LS4**	29
290	72	5.00*	1570	1.30	**RF27**			29
340	62	4.27	1530	1.40				
363	58	4.00*	1510	1.45				
430	49	3.37	1460	1.60				
219	96	13.28*	1710	1.35				
245	86	11.86	1680	1.50				
287	73	10.13	1630	1.65				
441	48	6.59	1450	2.2	**R27**	-	**DRN90L2**	25
519	41	5.60*	1400	2.4	**RF27**			25
581	36	5.00*	1370	2.6				
680	31	4.27	1320	2.8				
726	29	4.00*	1290	2.9				
862	24	3.37	1240	3.2				

P_N = 2.2 kW

n_a min^{-1}	M_a Nm	i	F_{Ra} N	SEW f_B	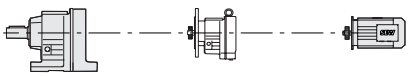			m kg
307	68	4.73	5140	1.80				
359	59	4.04*	4910	2.4				
392	54	3.70	4780	2.9				
446	47	3.25*	4600	3.9				
471	45	3.08*	4530	4.3				
538	39	2.70	4350	5.5	**RX77**	-	**DRN100LS4**	48
597	35	2.43	4210	6.1	**RXF77**			50
681	31	2.13	4040	6.5				
771	27	1.88*	3890	6.9				
870	24	1.67	3750	7.2				
1020	21	1.42	3560	7.5				

P_N = 2.2 kW

n_a min^{-1}	M_a Nm	i	F_{Ra} N	SEW f_B	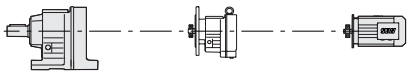			m kg
384	55	3.77	3250	1.60				
453	46	3.20*	3110	2.2				
502	42	2.89	3020	2.5				
570	37	2.54	2920	3.2				
604	35	2.40*	2870	3.5	**RX67**	-	**DRN100LS4**	38
710	30	2.04	2740	4.5	**RXF67**			42
781	27	1.86	2660	4.7				
901	23	1.61	2550	4.9				
1035	20	1.40*	2440	5.1				
462	45	3.14	2430	1.45				
549	38	2.64*	2330	1.80				
612	34	2.37	2260	2.0				
710	30	2.04	2170	2.3	**RX57**	-	**DRN100LS4**	36
755	28	1.92*	2130	2.5	**RXF57**			37
878	24	1.65	2050	2.9				
982	21	1.48	1980	3.2				
1110	19	1.30	1910	3.3				

P_N = 3.0 kW

n_a min^{-1}	M_a Nm	i	F_{Ra} N	SEW f_B	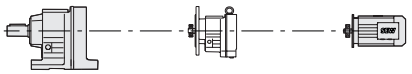			m kg
1.1	23700	1342	120000	0.85	**R167**			820
1.2	21800	1229	120000	0.90	**RF167**	**R107**	**DRN100L4**	830
1.3	19600	1111	120000	1.00	**RM167**			1030
1.1	23300	1279	120000	0.85				
1.3	20400	1123	120000	1.00				
1.5	18100	999	120000	1.10	**R167**			780
1.7	15600	861	120000	1.30	**RF167**	**R97**	**DRN100L4**	780
1.9	13800	760	120000	1.45	**RM167**			980
2.2	11700	656	120000	1.70				
2.9	8950	503	120000	2.2				
2.7	9590	533	68400	1.35				
3.2	8270	462	70000	1.55	**R147**			470
3.4	7740	426	70600	1.70	**RF147**	**R87**	**DRN100L4**	475
4.0	6680	368	71600	1.95	**RM147**			640
4.5	5910	326	72300	2.2				
5.2	5020	280	72900	2.6				
1.6	16200	889	33300	0.80				
1.9	14300	784	58900	0.90	**R147**			445
2.1	12600	695	63400	1.05	**RF147**	**R77**	**DRN100L4**	455
2.4	11300	619	65700	1.15	**RM147**			620
2.6	10200	558	67500	1.25				
3.0	8920	490	50000	0.90				
3.4	7790	428	53800	1.05				
3.8	6980	381	55400	1.15	**R137**			315
4.5	5920	323	57200	1.35	**RF137**	**R77**	**DRN100L4**	340
5.0	5330	291	58000	1.50	**RM137**			450
5.7	4660	255	58800	1.70				
6.5	4080	223	59400	1.95				
2.8	9600	517	38900	0.85	**R137**			305
3.2	8410	453	52200	0.95	**RF137**	**R77**	**DRN100L4**	330
					RM137			440

P_N = 3.0 kW

n_a min^{-1}	M_a Nm	i	F_{Ra} N	SEW f_B	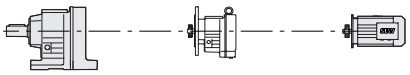			m kg
3.6	7400	407	43000	0.80	**R127**			285
3.8	7050	386	43000	0.85	**RF127**	**R77**	**DRN100L4**	295
4.9	5440	298	43000	1.10	**RM127**			395
5.8	4610	253	43000	1.30				
3.7	7320	394	43000	0.80				
4.5	6060	327	43000	1.00				
5.6	4780	259	43000	1.25	**R127**			270
7.2	3730	202	43000	1.60	**RF127**	**R77**	**DRN100L4**	290
9.0	3000	162	43000	2.0	**RM127**			385
12	2320	126	43000	2.6				
5.8	4600	253	27700	0.95	**R107**			230
6.8	3900	214	31500	1.10	**RF107**	**R77**	**DRN100L4**	235
7.8	3410	187	33500	1.25	**RM107**			325
					R107			225
5.7	4730	256	25600	0.90	**RF107**	**R77**	**DRN100L4**	230
					RM107			315
5.5	5170	262.65	43000	1.15				
6.1	4730	240.48	43000	1.25				
6.9	4180	212.46	43000	1.45				
8.1	3550	180.23	43000	1.70				
8.8	3270	165.95	43000	1.85				
9.8	2920	148.33	43000	2.1	**R127**			245
11	2630	133.53	43000	2.3	**RF127**	**-**	**DRN100L4**	260
12	2380	120.92	43000	2.5	**RM127**			355
14	2110	107.23	43000	2.8				
15	1910	96.95	43000	3.2				
17	1680	85.26	43000	3.6				
18	1620	82.17	43000	3.7				
6.1	4670	158.68	27300	0.90	**R107**			210
6.9	4170	141.83	30100	1.05	**RF107**	**-**	**DRN132S6**	215
7.6	3760	127.68	32100	1.15	**RM107**			305
6.3	4520	229.95	28200	0.95				
7.2	4000	203.16	31000	1.10				
8.5	3390	172.34	33600	1.25				
9.2	3120	158.68	34500	1.40				
10	2790	141.83	35600	1.55	**R107**			190
11	2510	127.68	36200	1.70	**RF107**	**-**	**DRN100L4**	195
13	2280	115.63	36500	1.90	**RM107**			285
14	2020	102.53	36800	2.1				
16	1820	92.70	37000	2.4				
19	1550	78.57	35500	2.8				
20	1430	72.88	34800	3.0				
9.7	2970	150.78	21000	1.00				
11	2490	126.75	24100	1.20				
13	2290	116.48	25100	1.30				
14	2040	103.44	26200	1.45				
16	1820	92.48	27100	1.65				
18	1640	83.15	27400	1.85				
20	1420	72.17	27500	2.1	**R97**			135
22	1280	65.21	26700	2.3	**RF97**	**-**	**DRN100L4**	150
24	1180	59.92	26100	2.5	**RM97**			200
27	1050	53.21	25300	2.9				
31	940	47.58	24500	3.2				
34	840	42.78	23800	3.6				
39	730	37.13	22800	4.1				
44	655	33.25	22100	4.4				

P_N = 3.0 kW

n_a min^{-1}	M_a Nm	i	F_{Ra} N	SEW f_B	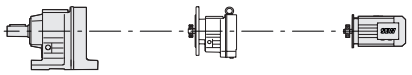			m kg
16	1840	93.38	12100	0.85				
18	1610	81.92	16500	0.95				
20	1430	72.57	17700	1.10				
23	1250	63.68*	18700	1.25				
24	1190	60.35*	19000	1.30	**R87**			92
28	1040	52.82	19700	1.50	**RF87**	-	**DRN100L4**	99
31	940	47.58	19800	1.65	**RM87**			130
35	820	41.74	19200	1.90				
40	725	36.84*	18500	2.1				
45	645	32.66*	17900	2.4				
52	550	27.88	17200	2.7				
42	675	34.40*	18200	2.2				
46	620	31.40	17700	2.5				
52	550	27.84*	17200	2.8				
62	460	23.40	16300	3.4	**R87**			90
68	425	21.51	15900	3.5	**RF87**	-	**DRN100L4**	97
76	375	19.10	15400	3.8	**RM87**			125
85	335	17.08*	14900	4.1				
95	300	15.35	14400	4.4				
32	900	45.81	9090	0.90				
34	850	43.26	9620	0.95				
40	725	36.83	10700	1.15	**R77**			65
44	660	33.47	11200	1.25	**RF77**	-	**DRN100L4**	71
50	570	29.00	11600	1.45	**RM77**			96
58	495	25.23	11200	1.55				
62	460	23.37	11000	1.80				
68	420	21.43	10700	1.95				
77	370	18.80	10400	2.1				
82	350	17.82*	10200	2.2				
93	305	15.60	9870	2.4				
104	275	14.05	9600	2.6	**R77**			64
118	245	12.33	9250	2.9	**RF77**	-	**DRN100L4**	70
134	215	10.88	8930	3.1	**RM77**			95
151	190	9.64	8630	3.3				
169	169	8.59	8400	3.7				
188	152	7.74	8140	4.0				
214	134	6.79	7830	4.3				
62	460	23.44	8660	1.20				
73	390	19.89	8350	1.55				
81	355	17.95	8150	1.65				
92	310	15.79	7900	1.80	**R67**			58
98	295	14.91	7790	1.85	**RF67**	-	**DRN100L4**	61
115	250	12.70	7470	2.1	**RM67**			77
126	225	11.54	7290	2.2				
146	197	10.00	7010	2.4				
					R57			52
54	530	26.97	4430	0.85	**RF57**	-	**DRN100L4**	56
					RM57			68

P_N = 3.0 kW

n_a min^{-1}	M_a Nm	i	F_{Ra} N	SEW f_B	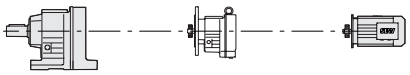			m kg
66	430	21.93	4360	1.05				
78	365	18.60*	4280	1.25				
87	330	16.79	4220	1.35				
99	290	14.77*	4140	1.50				
104	275	13.95*	4100	1.55				
123	235	11.88	3980	1.75				
135	210	10.79	3900	1.85	**R57**			51
156	184	9.35	3790	2.0	**RF57**	-	**DRN100L4**	55
161	178	9.06	3780	2.1	**RM57**			67
183	157	7.97	3670	2.3				
193	148	7.53	3620	2.4				
227	126	6.41	3480	2.7				
250	115	5.82	3400	2.8				
289	99	5.05	3270	3.1				
332	86	4.39	3160	3.2				
132	215	21.93	3920	2.1				
156	184	18.60*	3790	2.4				
172	166	16.79	3700	2.7	**R57**			51
196	146	14.77*	3600	3.0	**RF57**	-	**DRN100LM2**	55
207	138	13.95*	3550	3.1	**RM57**			67
244	118	11.88	3410	3.4				
268	107	10.79	3330	3.7				
90	320	16.22	2210	0.85				
100	285	14.56	2650	0.90				
116	245	12.54	3040	1.00				
123	230	11.79	3020	1.05				
143	200	10.15	2950	1.15				
161	178	9.07	2890	1.25				
182	158	8.01	2820	1.30	**R47**	-	**DRN100L4**	46
188	153	7.76*	2720	1.05	**RF47**			46
209	137	6.96	2670	1.15				
243	118	6.00	2590	1.30				
258	111	5.64*	2550	1.40				
300	95	4.85	2470	1.55				
336	85	4.34	2410	1.70				
380	75	3.83	2340	1.90				
245	117	11.79	2650	2.1				
285	100	10.15	2560	2.3				
319	90	9.07	2490	2.5				
361	79	8.01	2410	2.6				
373	77	7.76*	2350	2.1				
416	69	6.96	2290	2.3	**R47**	-	**DRN100LM2**	46
483	59	6.00	2200	2.6	**RF47**			46
513	56	5.64*	2170	2.8				
596	48	4.85	2080	3.1				
667	43	4.34	2020	3.4				
755	38	3.83	1950	3.8				
144	199	10.11	920	0.85				
154	186	9.47	1140	0.90				
183	157	7.97	1610	1.00				
218	131	6.67	1350	1.10				
257	111	5.67	1700	1.25	**R37**	-	**DRN100L4**	42
288	100	5.06	1900	1.35	**RF37**			44
337	85	4.32	2110	1.50				
360	80	4.05	2190	1.55				
427	67	3.41	2160	1.65				

P_N = 3.0 kW

n_a min^{-1}	M_a Nm	i	F_{Ra} N	SEW f_B	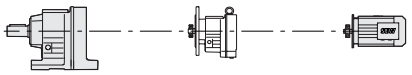			m kg
286	100	10.11	2380	1.70	**R37 RF37**	-	**DRN100LM2**	42 44
306	94	9.47	2360	1.80				
363	79	7.97	2270	2.0				
434	66	6.67	2150	2.2				
511	56	5.67	2070	2.5				
572	50	5.06	2020	2.7				
670	43	4.32	1940	3.0				
715	40	4.05	1910	3.1				
849	34	3.41	1820	3.3				
260	110	5.60*	455	0.90	**R27 RF27**	-	**DRN100L4**	37 37
291	98	5.00*	695	0.95				
341	84	4.27	970	1.05				
364	79	4.00*	1070	1.10				
432	66	3.37	1280	1.20				
439	65	6.59	1290	1.60	**R27 RF27**	-	**DRN100LM2**	37 37
517	55	5.60*	1320	1.80				
579	50	5.00*	1290	1.90				
678	42	4.27	1250	2.1				
724	40	4.00*	1240	2.2				
859	33	3.37	1190	2.4				

P_N = 3.0 kW

n_a min^{-1}	M_a Nm	i	F_{Ra} N	SEW f_B	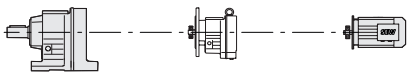			m kg
226	127	6.45	7050	1.50	**RX87 RXF87**	-	**DRN100L4**	72 77
262	109	5.56*	6760	2.1				
287	100	5.07	6580	2.5				
324	89	4.50*	6350	3.3				
385	74	3.78	6030	4.1				
308	93	4.73	5000	1.30	**RX77 RXF77**	-	**DRN100L4**	55 57
360	79	4.04*	4780	1.80				
393	73	3.70	4670	2.1				
448	64	3.25*	4500	2.9				
473	61	3.08*	4430	3.2				
386	74	3.77	3120	1.15	**RX67 RXF67**	-	**DRN100L4**	45 49
455	63	3.20*	3000	1.60				
504	57	2.89	2920	1.85				
573	50	2.54	2820	2.4				
607	47	2.40*	2780	2.6				
713	40	2.04	2660	3.3				
784	37	1.86	2590	3.5				
905	32	1.61	2480	3.6				
1040	28	1.40*	2380	3.8				
464	62	3.14	2310	1.05	**RX57 RXF57**	-	**DRN100L4**	43 45
552	52	2.64*	2220	1.35				
614	47	2.37	2160	1.50				
713	40	2.04	2090	1.70				
758	38	1.92*	2050	1.85				
881	33	1.65	1970	2.1				
986	29	1.48	1910	2.3				
1115	26	1.30	1850	2.5				

P_N = 4.0 kW

n_a min^{-1}	M_a Nm	i	F_{Ra} N	SEW f_B	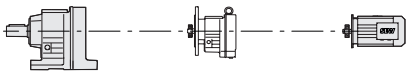			m kg
1.5	22800	950	120000	0.90	**R167**			830
1.7	20500	860	120000	0.95	**RF167**	**R107**	**DRN112M4**	840
					RM167			1030
1.5	24200	999	120000	0.85				
1.7	20800	861	120000	0.95				
1.9	18400	760	120000	1.10	**R167**			780
2.2	15600	656	120000	1.30	**RF167**	**R97**	**DRN112M4**	790
2.9	12000	503	120000	1.65	**RM167**			990
3.9	8970	376	120000	2.2				
4.4	7980	335	120000	2.5				
2.8	12800	533	63000	1.00				
3.2	11100	462	66200	1.20				
3.4	10300	426	67300	1.25				
4.0	8910	368	69200	1.45				
4.5	7880	326	70400	1.65	**R147**			475
5.2	6710	280	71600	1.95	**RF147**	**R87**	**DRN112M4**	485
5.9	5920	247	72300	2.2	**RM147**			650
6.9	5110	214	72900	2.5				
7.8	4520	189	73200	2.9				
9.2	3800	159	73600	3.4				
2.4	15100	619	49400	0.85				
2.6	13600	558	61500	0.95	**R147**			455
3.0	11900	489	64800	1.10	**RF147**	**R77**	**DRN112M4**	465
3.5	10100	415	67700	1.30	**RM147**			630
3.8	9280	381	44800	0.85				
4.5	7870	323	53700	1.00	**R137**			325
5.0	7090	291	55200	1.15	**RF137**	**R77**	**DRN112M4**	350
5.8	6190	255	56700	1.30	**RM137**			460
6.6	5430	223	57900	1.45				
3.9	9270	376	45100	0.85	**R137**			315
4.3	8340	339	52500	0.95	**RF137**	**R77**	**DRN112M4**	340
4.9	7310	297	54800	1.10	**RM137**			450
4.9	7240	298	43000	0.85	**R127**			295
5.8	6140	253	43000	1.00	**RF127**	**R77**	**DRN112M4**	305
					RM127			400
5.7	6360	259	43000	0.95				
7.2	4960	202	43000	1.20	**R127**			280
9.0	4000	162	43000	1.50	**RF127**	**R77**	**DRN112M4**	300
12	3090	126	43000	1.95	**RM127**			395
7.8	4540	187	28100	0.95	**R107**			240
					RF107	**R77**	**DRN112M4**	245
					RM107			330
7.6	4740	193	25200	0.90	**R107**			230
8.5	4250	172	29800	1.00	**RF107**	**R77**	**DRN112M4**	240
					RM107			325
4.4	8780	222.60*	50600	0.90				
5.1	7440	188.45	54500	1.10				
5.6	6880	174.40*	55600	1.15				
6.2	6170	156.31	56800	1.30	**R137**			295
6.9	5570	141.12*	57700	1.45	**RF137**	**-**	**DRN132S6**	320
7.6	5060	128.18	58300	1.60	**RM137**			430
8.5	4490	113.72	59000	1.80				
9.4	4070	103.20*	59400	1.95				
11	3500	88.70*	59900	2.3				

P_N = 4.0 kW

n_a min^{-1}	M_a Nm	i	F_{Ra} N	SEW f_B	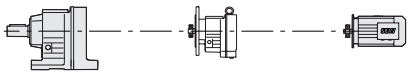			m kg
5.6	6850	262.65	43000	0.90				
6.1	6270	240.48	43000	0.95				
6.9	5540	212.46	43000	1.10				
8.1	4700	180.23	43000	1.30				
8.8	4330	165.95	43000	1.40				
9.9	3870	148.33	43000	1.55				
11	3480	133.53	43000	1.70	**R127**			255
12	3150	120.92	43000	1.90	**RF127**	-	**DRN112M4**	265
14	2800	107.23	43000	2.1	**RM127**			360
15	2530	96.95	43000	2.4				
17	2220	85.26	43000	2.7				
18	2140	82.17	43000	2.8				
19	1990	76.21	43000	3.0				
21	1790	68.61*	43000	3.4				
24	1620	62.13	43000	3.7				
8.5	4500	172.34	28400	0.95				
9.2	4140	158.68	30300	1.05				
10	3700	141.83	32400	1.15				
11	3330	127.68	33800	1.30				
13	3020	115.63	34900	1.45				
14	2680	102.53	35900	1.60	**R107**			200
16	2420	92.70	36200	1.80	**RF107**	-	**DRN112M4**	205
19	2050	78.57	34600	2.1	**RM107**			295
20	1900	72.88	33900	2.3				
22	1710	65.60*	33000	2.5				
25	1550	59.41	32100	2.8				
28	1370	52.68	31000	3.1				
13	3040	116.48	18300	1.00				
14	2700	103.44	22900	1.10				
16	2410	92.48	24500	1.25				
18	2170	83.15	25700	1.40				
20	1880	72.17	26500	1.60				
22	1700	65.21	25800	1.75	**R97**			140
24	1560	59.92	25300	1.90	**RF97**	-	**DRN112M4**	160
28	1390	53.21	24600	2.2	**RM97**			210
31	1240	47.58	23800	2.4				
34	1120	42.78	23200	2.7				
39	970	37.13	22300	3.1				
44	870	33.25	21600	3.3				
46	840	32.05	21400	3.1				
54	710	27.19	20400	3.6	**R97**			140
58	655	25.03	20000	4.3	**RF97**	-	**DRN112M4**	155
65	585	22.37	19300	4.7	**RM97**			205
73	525	20.14	18700	5.0				
23	1660	63.68*	13700	0.95				
24	1570	60.35*	14300	1.00				
28	1380	52.82	15500	1.10				
31	1240	47.58	16300	1.25	**R87**			100
35	1090	41.74	17000	1.40	**RF87**	-	**DRN112M4**	110
40	960	36.84*	17500	1.60	**RM87**			140
45	850	32.66*	17400	1.80				
53	730	27.88	16700	2.1				

P_N = 4.0 kW

n_a min^{-1}	M_a Nm	i	F_{Ra} N	SEW f_B	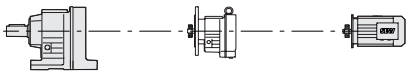			m kg
43	900	34.40*	17600	1.65	**R87** **RF87** **RM87**	-	**DRN112M4**	99 105 135
47	820	31.40	17200	1.90				
53	725	27.84*	16700	2.1				
63	610	23.40	15900	2.5				
68	560	21.51	15600	2.7				
77	500	19.10	15100	2.9				
86	445	17.08*	14600	3.1				
95	400	15.35	14200	3.3				
110	350	13.33	13600	3.7				
123	310	11.93	13200	4.0				
40	960	36.83	7260	0.85	**R77** **RF77** **RM77**	-	**DRN112M4**	74 80 105
44	870	33.47	9400	0.95				
50	755	29.00	10500	1.10				
58	660	25.23	10700	1.20				
63	610	23.37	10500	1.35	**R77** **RF77** **RM77**	-	**DRN112M4**	73 79 105
68	560	21.43	10300	1.45				
78	490	18.80	10000	1.60				
82	465	17.82*	9880	1.70				
94	405	15.60	9560	1.80				
104	365	14.05	9310	1.95				
119	320	12.33	9000	2.2				
135	285	10.88	8710	2.3				
152	250	9.64	8430	2.5				
170	225	8.59	8250	2.8				
189	200	7.74	8000	3.0				
216	177	6.79	7700	3.3				
244	156	5.99*	7420	3.5				
276	139	5.31*	7160	3.7				
74	520	19.89	7910	1.15	**R67** **RF67** **RM67**	-	**DRN112M4**	67 70 86
82	470	17.95	7750	1.25				
93	410	15.79	7550	1.35				
98	390	14.91	7460	1.40				
115	330	12.70	7190	1.55				
127	300	11.54	7030	1.65				
146	260	10.00	6790	1.80				
168	225	8.70*	6550	1.95				
188	205	7.79	6390	1.85				
199	192	7.36*	6290	1.95				
234	164	6.27	6020	2.0				
257	149	5.70	5870	2.1				
297	129	4.93	5630	2.3				
341	112	4.29	5410	2.4				
79	485	18.60*	3680	0.95	**R57** **RF57** **RM57**	-	**DRN112M4**	61 64 76
87	440	16.79	3830	1.05				
99	385	14.77*	3790	1.15				
105	365	13.95*	3770	1.20				
123	310	11.88	3700	1.30				
136	280	10.79	3650	1.40				
157	245	9.35	3560	1.50				
162	235	9.06	3570	1.60				
184	210	7.97	3480	1.70				
194	196	7.53	3450	1.80				
228	167	6.41	3330	2.0				
251	152	5.82	3260	2.1				
290	132	5.05	3160	2.3				
333	115	4.39	3050	2.4				

P_N = 4.0 kW

n_a min^{-1}	M_a Nm	i	F_{Ra} N	SEW f_B	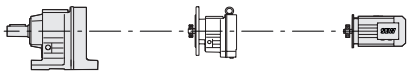			m kg
144	265	10.15	2070	0.85				
161	235	9.07	2450	0.95				
183	210	8.01	2630	1.00				
210	182	6.96	2470	0.90				
244	156	6.00	2420	1.00	**R47**	-	**DRN112M4**	56
260	147	5.64*	2400	1.05	**RF47**			56
302	127	4.85	2340	1.20				
338	113	4.34	2290	1.30				
382	100	3.83	2230	1.45				
182	210	16.22	2630	1.30				
202	189	14.56	2590	1.40				
235	163	12.54	2530	1.55				
250	153	11.79	2500	1.60				
290	132	10.15	2430	1.75				
325	117	9.07	2370	1.85				
368	104	8.01	2310	1.95	**R47**	-	**DRN112M2**	56
380	100	7.76*	2230	1.60	**RF47**			56
423	90	6.96	2180	1.75				
492	78	6.00	2110	2.0				
523	73	5.64*	2080	2.1				
607	63	4.85	2010	2.4				
680	56	4.34	1950	2.6				
769	50	3.83	1890	2.9				

P_N = 4.0 kW

n_a min^{-1}	M_a Nm	i	F_{Ra} N	SEW f_B	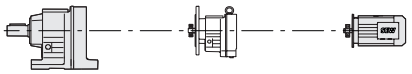			m kg
263	145	5.56*	6580	1.55				
289	132	5.07	6420	1.90	**RX87**	-	**DRN112M4**	81
325	117	4.50*	6210	2.5	**RXF87**			86
387	99	3.78	5910	3.1				
362	105	4.04*	4630	1.35				
395	97	3.70	4530	1.60				
450	85	3.25*	4370	2.2				
475	80	3.08*	4310	2.4				
543	70	2.70	4150	3.1	**RX77**	-	**DRN112M4**	64
603	63	2.43	4030	3.4	**RXF77**			67
687	56	2.13	3880	3.6				
779	49	1.88*	3750	3.8				
878	43	1.67	3620	4.0				
1030	37	1.42	3450	4.2				
458	83	3.20*	2860	1.20				
507	75	2.89	2790	1.40				
576	66	2.54	2710	1.80				
610	63	2.40*	2670	1.95	**RX67**	-	**DRN112M4**	55
716	53	2.04	2560	2.5	**RXF67**			59
788	48	1.86	2500	2.6				
910	42	1.61	2400	2.7				
1045	37	1.40*	2310	2.9				

P_N = 4.0 kW

n_a min^{-1}	M_a Nm	i	F_{Ra} N	SEW f_B	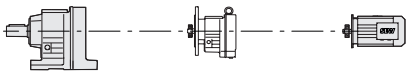			m kg
555	69	2.64*	1740	1.00				
618	62	2.37	1840	1.10				
717	53	2.04	1960	1.30				
763	50	1.92*	1950	1.40	**RX57 RXF57**	**-**	**DRN112M4**	52 54
886	43	1.65	1880	1.60				
992	39	1.48	1830	1.75				
1120	34	1.30	1780	1.85				

P_N = 5.5 kW

n_a min^{-1}	M_a Nm	i	F_{Ra} N	SEW f_B	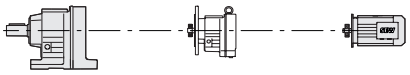			m kg
2.1	22700	690	120000	0.90	**R167 RF167 RM167**	**R107**	**DRN132S4**	840 850 1040
2.2	21700	656	120000	0.90				
2.5	19000	579	120000	1.05				
2.9	16700	503	120000	1.20				
3.4	14200	432	120000	1.40	**R167 RF167 RM167**	**R97**	**DRN132S4**	800 800 1000
3.9	12500	376	120000	1.60				
4.4	11100	335	120000	1.80				
4.8	9930	303	120000	2.0				
5.2	9150	279	120000	2.2				
3.2	15300	462	45900	0.85				
3.4	14300	426	59000	0.90				
4.0	12300	368	64000	1.05				
4.5	10900	326	66400	1.20	**R147 RF147 RM147**	**R87**	**DRN132S4**	490 495 660
5.2	9310	280	68700	1.40				
5.9	8210	247	70100	1.60				
6.8	7090	214	71200	1.85				
7.7	6270	189	72000	2.1				
7.2	6860	202	43000	0.85	**R127**			290
9.0	5520	162	43000	1.10	**RF127**	**R77**	**DRN132S4**	310
12	4270	126	43000	1.40	**RM127**			405
6.0	8800	163.31	69400	1.50				
6.6	7910	146.91	70400	1.65				
8.1	6460	119.86	71800	2.0	**R147**			450
8.9	5890	109.31	72300	2.2	**RF147**	**-**	**DRN132L6**	455
10	5100	94.60*	72900	2.6	**RM147**			620
12	4500	83.47	73300	2.9				
5.6	9390	174.40*	42800	0.85				
6.2	8420	156.31	52200	0.95				
6.9	7600	141.12*	54200	1.05	**R137**			320
7.6	6900	128.18	55500	1.15	**RF137**	**-**	**DRN132L6**	345
8.6	6130	113.72	56800	1.30	**RM137**			455
9.5	5560	103.20*	57700	1.45				

P_N = 5.5 kW

n_a min^{-1}	M_a Nm	i	F_{Ra} N	SEW f_B	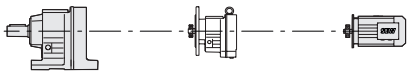			m kg
6.6	8000	222.60*	53400	1.00				
7.8	6770	188.45	55800	1.20				
8.4	6270	174.40*	56600	1.30				
9.4	5620	156.31	57600	1.40				
10	5070	141.12*	58300	1.60				
11	4610	128.18	58900	1.75				
13	4090	113.72	59400	1.95	**R137**			295
14	3710	103.20*	59800	2.2	**RF137**	-	**DRN132S4**	320
16	3190	88.70*	60200	2.5	**RM137**			430
18	2910	80.91*	60400	2.8				
20	2640	73.49	60600	3.0				
22	2340	65.20	60800	3.4				
25	2130	59.17*	60900	3.8				
29	1830	50.86*	61000	4.4				
8.1	6480	180.23	43000	0.95				
8.8	5970	165.95	43000	1.00				
9.9	5330	148.33	43000	1.15				
11	4800	133.53	43000	1.25				
12	4350	120.92	43000	1.40				
14	3850	107.23	43000	1.55				
15	3490	96.95	43000	1.70	**R127**			265
17	3070	85.26	43000	1.95	**RF127**	-	**DRN132S4**	280
18	2950	82.17	43000	2.0	**RM127**			375
19	2740	76.21	43000	2.2				
21	2470	68.61*	43000	2.4				
24	2230	62.13	43000	2.7				
27	1980	55.09	43000	3.0				
29	1790	49.81	43000	3.4				
35	1520	42.22*	43000	4.0				
11	4590	127.68	27800	0.95				
13	4160	115.63	30200	1.05				
14	3690	102.53	32400	1.15				
16	3330	92.70	33800	1.30				
19	2820	78.57	33400	1.50	**R107**			210
20	2620	72.88	32800	1.65	**RF107**	-	**DRN132S4**	215
22	2360	65.60*	31900	1.80	**RM107**			305
25	2140	59.41	31100	2.0				
28	1890	52.68	30200	2.3				
31	1710	47.63	29400	2.5				
36	1450	40.37*	28100	3.0				
18	2990	83.15	20000	1.00				
20	2590	72.17	22100	1.15				
22	2340	65.21	24600	1.30				
24	2150	59.92	24100	1.40				
27	1910	53.21	23500	1.55	**R97**			155
31	1710	47.58	22900	1.75	**RF97**	-	**DRN132S4**	170
34	1540	42.78	22400	1.95	**RM97**			220
39	1330	37.13	21600	2.3				
44	1200	33.25	21000	2.4				
53	990	27.58	20000	2.7				

P_N = 5.5 kW

n_a min^{-1}	M_a Nm	i	F_{Ra} N	SEW f_B	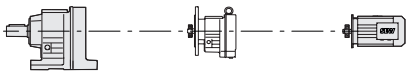			m kg
46	1150	32.05	20800	2.2				
54	980	27.19	19900	2.6				
58	900	25.03	19500	3.1	**R97**			150
65	800	22.37	18900	3.4	**RF97**	-	**DRN132S4**	165
73	725	20.14	18300	3.6	**RM97**			220
80	655	18.24	17800	3.8				
90	580	16.17	17200	4.1				
31	1710	47.58	15700	0.90				
35	1500	41.74	17300	1.05	**R87**			110
40	1320	36.84*	17100	1.15	**RF87**	-	**DRN132S4**	120
45	1170	32.66*	16600	1.30	**RM87**			150
52	1000	27.88	16100	1.50				
52	1000	27.84*	16000	1.55				
62	840	23.40	15400	1.85				
68	775	21.51	15100	1.95				
76	685	19.10	14600	2.1				
86	615	17.08*	14200	2.3				
95	550	15.35	13800	2.4	**R87**			110
110	480	13.33	13300	2.7	**RF87**	-	**DRN132S4**	120
122	430	11.93	12900	2.9	**RM87**			150
148	355	9.90*	12200	3.3				
160	330	9.14*	12100	3.7				
178	295	8.22	11700	3.9				
205	255	7.13	11200	4.2				
78	675	18.80	9320	1.15				
82	640	17.82*	9360	1.20				
94	560	15.60	9110	1.30				
104	505	14.05	8910	1.45				
119	445	12.33	8650	1.55				
134	390	10.88	8390	1.70	**R77**			84
152	345	9.64	8150	1.80	**RF77**	-	**DRN132S4**	90
170	310	8.59	8030	2.0	**RM77**			115
189	280	7.74	7810	2.2				
215	245	6.79	7530	2.4				
244	215	5.99*	7270	2.5				
275	191	5.31*	7030	2.7				
93	570	15.79	6720	1.00				
98	535	14.91	6980	1.05				
115	455	12.70	6790	1.15				
127	415	11.54	6660	1.20				
146	360	10.00	6470	1.30				
168	315	8.70*	6280	1.40	**R67**			79
187	280	7.79	6150	1.35	**RF67**	-	**DRN132S4**	82
199	265	7.36*	6070	1.40	**RM67**			98
233	225	6.27	5830	1.45				
257	205	5.70	5690	1.50				
296	177	4.93	5480	1.65				
340	154	4.29	5280	1.75				
337	156	8.70*	5280	2.8				
377	139	7.79	5140	2.7				
399	132	7.36*	5060	2.8	**R67**			79
468	112	6.27	4830	2.9	**RF67**	-	**DRN132S2**	82
515	102	5.70	4700	3.0	**RM67**			98
595	88	4.93	4510	3.3				
684	77	4.29	4330	3.5				

P_N = 5.5 kW

n_a min^{-1}	M_a Nm	i	F_{Ra} N	SEW f_B	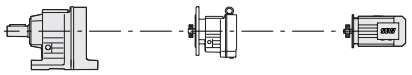			m kg
99	530	14.77*	1860	0.80				
105	500	13.95*	2200	0.85				
123	425	11.88	3000	0.95				
135	390	10.79	3270	1.00				
156	335	9.35	3240	1.10	**R57**			72
183	285	7.97	3210	1.25	**RF57**	-	**DRN132S4**	76
194	270	7.53	3190	1.30	**RM57**			88
228	230	6.41	3110	1.45				
251	210	5.82	3060	1.55				
290	181	5.05	2980	1.70				
333	158	4.39	2900	1.75				
314	167	9.35	2920	2.2				
368	143	7.97	2840	2.5				
390	135	7.53	2810	2.6	**R57**			72
458	115	6.41	2700	2.9	**RF57**	-	**DRN132S2**	76
504	104	5.82	2640	3.1	**RM57**			88
582	90	5.05	2550	3.4				
668	79	4.39	2460	3.6				
234	225	12.54	1790	1.10				
249	210	11.79	1970	1.15				
289	182	10.15	2250	1.25				
324	162	9.07	2210	1.35				
366	143	8.01	2170	1.45	**R47**	-	**DRN132S2**	67
489	107	6.00	1990	1.45	**RF47**			67
520	101	5.64*	1970	1.55				
605	87	4.85	1910	1.75				
677	78	4.34	1870	1.90				
766	69	3.83	1810	2.1				
301	174	4.85	1920	0.85	**R47**	-	**DRN132S4**	67
337	156	4.34	2110	0.95	**RF47**			67
381	138	3.83	2070	1.05				

P_N = 5.5 kW

n_a min^{-1}	M_a Nm	i	F_{Ra} N	SEW f_B	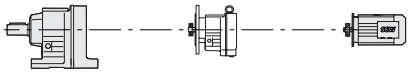			m kg
221	240	6.63*	10400	1.95				
260	200	5.61	9920	2.3	**RX107**	-	**DRN132S4**	150
281	187	5.19	9700	3.7	**RXF107**			165
314	167	4.65	9400	4.2				
252	210	5.79	8330	2.0				
297	177	4.91	7960	2.2				
323	163	4.52	7780	3.7				
361	145	4.04	7530	4.1				
401	131	3.64*	7310	4.6				
443	119	3.30	7100	5.0	**RX97**	-	**DRN132S4**	115
500	105	2.92	6850	5.7	**RXF97**			125
553	95	2.64	6650	6.3				
652	81	2.24*	6320	7.4				
747	70	1.96	6070	8.1				
893	59	1.64	5740	8.6				
1030	51	1.42	5490	8.9				

P_N = 5.5 kW

n_a min^{-1}	M_a Nm	i	F_{Ra} N	SEW f_B	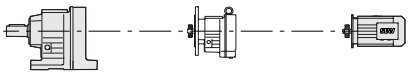			m kg
325	162	4.50*	6000	1.80	**RX87 RXF87**	-	**DRN132S4**	92 97
386	136	3.78	5740	2.2				
420	125	3.48	5610	3.2				
473	111	3.09	5430	3.7				
529	99	2.76*	5260	4.1				
589	89	2.48	5100	4.5				
678	77	2.15	4900	5.0				
450	117	3.25*	4200	1.55	**RX77 RXF77**	-	**DRN132S4**	76 78
474	111	3.08*	4140	1.75				
542	97	2.70	4010	2.2				
602	87	2.43	3900	2.5				
686	77	2.13	3760	2.6				
777	68	1.88*	3640	2.8				
877	60	1.67	3520	2.9				
1025	51	1.42	3360	3.0				
575	91	2.54	2540	1.30	**RX67 RXF67**	-	**DRN132S4**	66 70
609	86	2.40*	2510	1.45				
715	73	2.04	2420	1.80				
787	67	1.86	2370	1.90				
908	58	1.61	2290	1.95				
1045	50	1.40*	2210	2.1				
716	73	2.04	725	0.95	**RX57 RXF57**	-	**DRN132S4**	64 65
761	69	1.92*	810	1.00				
884	59	1.65	990	1.15				
990	53	1.48	1060	1.30				
1120	47	1.30	1200	1.35				

P_N = 7.5 kW

n_a min^{-1}	M_a Nm	i	F_{Ra} N	SEW f_B	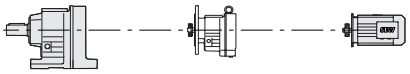			m kg
2.9	22800	511	120000	0.90	**R167 RF167 RM167**	**R107**	**DRN132M4**	860 870 1060
3.3	20500	446	120000	1.00	**R167 RF167 RM167**	**R107**	**DRN132M4**	850 860 1060
2.9	22700	503	120000	0.90	**R167 RF167 RM167**	**R97**	**DRN132M4**	810 820 1020
3.4	19400	432	120000	1.05				
3.9	17000	376	120000	1.20				
4.4	15100	335	120000	1.30				
4.9	13600	303	120000	1.45				
5.3	12500	279	120000	1.60				
4.5	14800	326	52300	0.90	**R147 RF147 RM147**	**R87**	**DRN132M4**	510 510 680
5.2	12700	280	63300	1.00				
5.9	11200	247	65900	1.15				
6.9	9670	214	68200	1.35				
7.8	8560	189	69700	1.50				
9.3	7190	159	71200	1.80				
9.0	7510	162	43000	0.80	**R127 RF127 RM127**	**R77**	**DRN132M4**	310 330 425
12	5810	126	43000	1.05				

P_N = 7.5 kW

n_a min^{-1}	M_a Nm	i	F_{Ra} N	SEW f_B	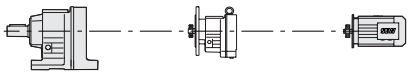			m kg
4.3	16800	229.71	120000	1.20				
5.2	13700	186.93*	120000	1.45				
6.4	11200	153.07	120000	1.80				
7.0	10200	139.98	120000	1.95				
8.0	8910	121.81*	120000	2.2	**R167**			730
9.1	7860	107.49	120000	2.5	**RF167**	-	**DRN160M6**	730
11	6820	93.19	120000	2.9	**RM167**			930
12	6070	82.91*	120000	3.3				
13	5390	73.70*	120000	3.7				
15	4930	67.40	120000	4.1				
6.0	11900	163.31	64700	1.10				
6.7	10700	146.91	66700	1.20				
8.2	8770	119.86	69400	1.50	**R147**			480
9.0	8000	109.31	70300	1.65	**RF147**	-	**DRN160M6**	490
10	6920	94.60*	71400	1.90	**RM147**			660
12	6110	83.47	72100	2.1				
7.8	9190	188.45	46300	0.85				
8.4	8510	174.40*	51800	0.95				
9.4	7630	156.31	54200	1.05				
10	6880	141.12*	55600	1.15				
11	6250	128.18	56600	1.30				
13	5550	113.72	57700	1.45	**R137**			315
14	5030	103.20*	58400	1.60	**RF137**	-	**DRN132M4**	335
17	4330	88.70*	59200	1.85	**RM137**			445
18	3950	80.91*	59600	2.0				
20	3590	73.49	59900	2.2				
23	3180	65.20	60200	2.5				
25	2890	59.17*	60400	2.8				
29	2480	50.86*	60700	3.2				
9.9	7240	148.33	43000	0.85				
11	6510	133.53	43000	0.90				
12	5900	120.92	43000	1.00				
14	5230	107.23	43000	1.15				
15	4730	96.95	43000	1.25				
17	4160	85.26	43000	1.45				
18	4010	82.17	43000	1.50	**R127**			285
19	3720	76.21	43000	1.60	**RF127**	-	**DRN132M4**	295
21	3350	68.61*	43000	1.80	**RM127**			390
24	3030	62.13	43000	2.0				
27	2690	55.09	43000	2.2				
29	2430	49.81	43000	2.5				
35	2060	42.22*	43000	2.9				
40	1800	36.88	43000	3.2				
48	1500	30.84	43000	3.6				
46	1570	32.18	43000	3.8	**R127**			270
					RF127	-	**DRN132M4**	290
					RM127			385

P_N = 7.5 kW

n_a min^{-1}	M_a Nm	i	F_{Ra} N	SEW f_B	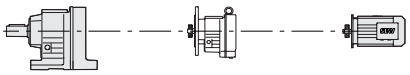			m kg
16	4520	92.70	28200	0.95				
19	3830	78.57	31600	1.10				
20	3560	72.88	31100	1.20				
22	3200	65.60*	30500	1.35				
25	2900	59.41	29800	1.50	**R107**			230
28	2570	52.68	29000	1.65	**RF107**	-	**DRN132M4**	235
31	2320	47.63	28300	1.85	**RM107**			320
36	1970	40.37*	27200	2.2				
42	1720	35.26	26200	2.5				
50	1440	29.49	25000	3.0				
48	1500	30.77	25300	2.9				
53	1350	27.58	24600	3.2	**R107**			220
59	1210	24.90*	23900	3.5	**RF107**	-	**DRN132M4**	230
65	1100	22.62	23300	3.9	**RM107**			315
25	2920	59.92	21500	1.05				
28	2600	53.21	22100	1.15				
31	2320	47.58	21700	1.30	**R97**			170
34	2090	42.78	21200	1.45	**RF97**	-	**DRN132M4**	190
40	1810	37.13	20600	1.65	**RM97**			240
44	1620	33.25	20100	1.80				
53	1350	27.58	19200	2.0				
46	1560	32.05	19900	1.65				
54	1330	27.19	19200	1.95	**R97**			170
59	1220	25.03	18800	2.3	**RF97**	-	**DRN132M4**	185
66	1090	22.37	18300	2.5	**RM97**			235
73	980	20.14	17800	2.7				
80	890	18.24	17300	2.8				
40	1800	36.84*	14700	0.85	**R87**			130
45	1590	32.66*	15600	0.95	**RF87**	-	**DRN132M4**	135
53	1360	27.88	15200	1.10	**RM87**			165
53	1360	27.84*	15200	1.15				
63	1140	23.40	14600	1.35				
68	1050	21.51	14400	1.45				
77	930	19.10	14000	1.55				
86	830	17.08*	13700	1.65				
96	750	15.35	12600	1.80				
110	650	13.33	12900	1.95	**R87**			130
123	580	11.93	12500	2.1	**RF87**	-	**DRN132M4**	135
148	485	9.90*	11900	2.4	**RM87**			165
161	445	9.14*	11800	2.7				
179	400	8.22	11500	2.9				
206	350	7.13	11000	3.1				
230	310	6.39	10700	3.3				
277	260	5.30*	10100	3.5				
78	920	18.80	5520	0.85				
82	870	17.82*	5910	0.90				
94	760	15.60	6760	0.95				
104	685	14.05	7300	1.05				
119	600	12.33	7850	1.15				
135	530	10.88	7970	1.25	**R77**			100
152	470	9.64	7770	1.35	**RF77**	-	**DRN132M4**	110
171	420	8.59	7690	1.50	**RM77**			135
190	380	7.74	7540	1.60				
216	330	6.79	7300	1.75				
245	290	5.99*	7060	1.85				
276	260	5.31*	6840	1.95				

P_N = 7.5 kW

n_a min^{-1}	M_a Nm	i	F_{Ra} N	SEW f_B	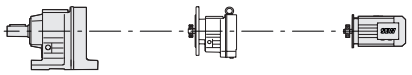			m kg
116	620	12.70	4420	0.85	**R67 RF67 RM67**	-	**DRN132M4**	97
127	565	11.54	5010	0.90				
147	490	10.00	5740	0.95				
169	425	8.70*	5900	1.05				
188	380	7.79	5600	1.00				100
199	360	7.36*	5760	1.05				
234	305	6.27	5570	1.10				115
258	280	5.70	5450	1.10				
298	240	4.93	5270	1.20				
342	210	4.29	5100	1.30				
184	390	7.97	1120	0.90	**R57 RF57 RM57**	-	**DRN132M4**	91
195	365	7.53	1410	0.95				
229	315	6.41	2120	1.05				94
252	285	5.82	2470	1.15				
291	245	5.05	2750	1.25				105
334	215	4.39	2700	1.30				
199	360	14.77*	2620	1.20	**R57 RF57 RM57**	-	**DRN132S2**	72
210	340	13.95*	2800	1.25				
247	290	11.88	2770	1.40				
272	265	10.79	2750	1.50				
314	230	9.35	2700	1.60				76
368	194	7.97	2660	1.85				
390	184	7.53	2630	1.90				88
458	156	6.41	2560	2.1				
504	142	5.82	2510	2.3				
582	123	5.05	2440	2.5				
669	107	4.39	2360	2.6				

P_N = 7.5 kW

n_a min^{-1}	M_a Nm	i	F_{Ra} N	SEW f_B	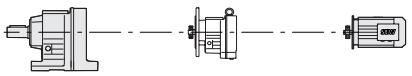			m kg
222	325	6.63*	10000	1.40	**RX107 RXF107**	-	**DRN132M4**	165
262	275	5.61	9620	1.65				
283	255	5.19	9420	2.7				185
316	225	4.65	9150	3.1				
350	205	4.20*	8890	4.1				
253	285	5.79	8030	1.50	**RX97 RXF97**	-	**DRN132M4**	135
299	240	4.91	7700	1.65				
325	220	4.52	7530	2.7				140
363	197	4.04	7310	3.0				
403	178	3.64*	7110	3.4				
445	161	3.30	6910	3.7				
502	143	2.92	6690	4.2				
326	220	4.50*	5720	1.30	**RX87 RXF87**	-	**DRN132M4**	110
388	185	3.78	5500	1.65				
422	170	3.48	5380	2.4				
476	151	3.09	5230	2.7				
532	135	2.76*	5080	3.0				115
592	121	2.48	4940	3.4				
682	105	2.15	4750	3.7				
761	94	1.93	4610	3.8				
918	78	1.60*	4370	4.0				
1055	68	1.39	4200	4.3				

P_N = 7.5 kW

n_a min^{-1}	M_a Nm	i	F_{Ra} N	SEW f_B	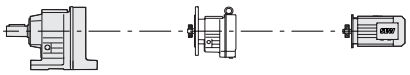			m kg
452	159	3.25*	3890	1.15				
477	150	3.08*	3910	1.30				
545	132	2.70	3800	1.65				
604	118	2.43	3710	1.80	**RX77**	-	**DRN132M4**	94
689	104	2.13	3600	1.90	**RXF77**			96
781	92	1.88*	3490	2.0				
881	81	1.67	3380	2.1				
1030	69	1.42	3240	2.2				
578	124	2.54	1590	0.95				
612	117	2.40*	1700	1.05				
718	100	2.04	1890	1.35	**RX67**	-	**DRN132M4**	85
790	91	1.86	2000	1.40	**RXF67**			89
913	78	1.61	2120	1.45				
1050	68	1.40*	2070	1.50				

P_N = 9.2 kW

n_a min^{-1}	M_a Nm	i	F_{Ra} N	SEW f_B	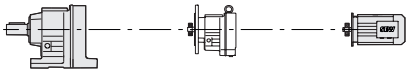			m kg
3.7	22500	399	120000	0.90	**R167**			860
4.1	20300	361	120000	1.00	**RF167**	**R107**	**DRN132L4**	870
					RM167			1070
3.4	23900	432	120000	0.85				
3.9	20900	376	120000	0.95	**R167**			820
4.4	18600	335	120000	1.05	**RF167**	**R97**	**DRN132L4**	830
4.9	16700	303	120000	1.20	**RM167**			1020
5.3	15400	279	120000	1.30				
5.3	15600	280	42500	0.85				
6.0	13800	247	61100	0.95	**R147**			510
6.9	11900	214	64800	1.10	**RF147**	**R87**	**DRN132L4**	520
7.8	10500	189	67000	1.25	**RM147**			690
9.3	8830	159	69300	1.45				
					R127			315
12	7120	126	43000	0.85	**RF127**	**R77**	**DRN132L4**	335
					RM127			435
9.0	9760	163.31	68100	1.35				
10	8780	146.91	69400	1.50				
12	7160	119.86	71200	1.80				
13	6530	109.31	71800	2.0	**R147**			450
16	5650	94.60*	72500	2.3	**RF147**	-	**DRN132L4**	455
18	4990	83.47	73000	2.6	**RM147**			620
20	4310	72.09	73400	3.0				
22	4000	66.99	73500	3.3				
9.4	9340	156.31	43800	0.85				
10	8430	141.12*	52100	0.95				
11	7660	128.18	54100	1.05				
13	6800	113.72	55700	1.20				
14	6170	103.20*	56800	1.30				
17	5300	88.70*	58000	1.50	**R137**			320
18	4840	80.91*	58600	1.65	**RF137**	-	**DRN132L4**	345
20	4390	73.49	59100	1.80	**RM137**			455
23	3900	65.20	59600	2.1				
25	3540	59.17*	59900	2.3				
29	3040	50.86*	60300	2.6				
33	2650	44.39	60600	3.0				

P_N = 9.2 kW

n_a min^{-1}	M_a Nm	i	F_{Ra} N	SEW f_B	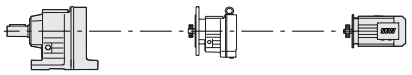			m kg
12	7230	120.92	43000	0.85				
14	6410	107.23	43000	0.95				
15	5790	96.95	43000	1.05				
17	5100	85.26	43000	1.20				
18	4910	82.17	43000	1.20				
19	4550	76.21	43000	1.30	**R127**			295
21	4100	68.61*	43000	1.45	**RF127**	-	**DRN132L4**	305
24	3710	62.13	43000	1.60	**RM127**			400
27	3290	55.09	43000	1.80				
30	2980	49.81	43000	2.0				
35	2520	42.22*	43000	2.4				
40	2200	36.88	43000	2.6				
48	1840	30.84	43000	2.9				
46	1920	32.18	43000	3.1	**R127**			275
51	1720	28.84	43000	3.5	**RF127**	-	**DRN132L4**	300
56	1560	26.04*	43000	3.9	**RM127**			395
19	4700	78.57	26900	0.90				
20	4360	72.88	29200	1.00				
22	3920	65.60*	29200	1.10				
25	3550	59.41	28700	1.20	**R107**			235
28	3150	52.68	28000	1.35	**RF107**	-	**DRN132L4**	245
31	2850	47.63	27400	1.50	**RM107**			330
36	2410	40.37*	26400	1.80				
42	2110	35.26	25600	2.0				
50	1760	29.49	24500	2.4				
48	1840	30.77	24700	2.3				
53	1650	27.58	24000	2.6	**R107**			230
59	1490	24.90*	23400	2.9	**RF107**	-	**DRN132L4**	235
65	1350	22.62	22800	3.2	**RM107**			325
73	1200	20.07	22100	3.6				
28	3180	53.21	10800	0.95				
31	2840	47.58	20600	1.05				
34	2560	42.78	20200	1.15	**R97**			180
40	2220	37.13	19800	1.35	**RF97**	-	**DRN132L4**	195
44	1990	33.25	19300	1.45	**RM97**			250
53	1650	27.58	18600	1.60				
59	1500	25.03	18200	1.90				
66	1340	22.37	17800	2.0				
73	1200	20.14	17300	2.2	**R97**			175
81	1090	18.24	16900	2.3	**RF97**	-	**DRN132L4**	195
91	970	16.17	16400	2.5	**RM97**			245
101	870	14.62	16000	2.6				
119	740	12.39	15300	3.0				
68	1290	21.51	13800	1.15				
77	1140	19.10	13500	1.25				
86	1020	17.08*	13200	1.35				
96	920	15.35	12900	1.45				
110	795	13.33	12500	1.60	**R87**			135
123	715	11.93	12200	1.70	**RF87**	-	**DRN132L4**	145
148	590	9.90*	11600	2.0	**RM87**			175
161	545	9.14*	11600	2.2				
179	490	8.22	11300	2.4				
206	425	7.13	10900	2.5				
230	380	6.39	10500	2.7				

P_N = 9.2 kW

n_a min^{-1}	M_a Nm	i	F_{Ra} N	SEW f_B	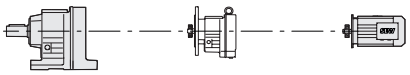			m kg
105	840	14.05	4880	0.85	**R77** **RF77** **RM77**	-	**DRN132L4**	110
119	735	12.33	5730	0.95				
135	650	10.88	6380	1.00				
152	575	9.64	6880	1.10				115
190	465	7.74	6370	1.30				140
216	405	6.79	6770	1.45				
245	360	5.99*	6890	1.50				
277	320	5.31*	6690	1.60				

P_N = 9.2 kW

n_a min^{-1}	M_a Nm	i	F_{Ra} N	SEW f_B	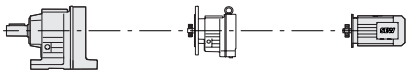			m kg
283	310	5.19	9200	2.2	**RX107** **RXF107**	-	**DRN132L4**	175
316	280	4.65	8940	2.5				
350	250	4.20*	8710	3.3				
385	230	3.81	8490	3.6				190
434	200	3.38	8220	4.1				
325	270	4.52	7330	2.2	**RX97** **RXF97**	-	**DRN132L4**	140
364	240	4.04	7130	2.5				
404	220	3.64*	6940	2.7				
446	197	3.30	6760	3.0				
503	175	2.92	6550	3.4				
556	158	2.64	6370	3.8				150
656	134	2.24*	6080	4.4				
751	117	1.96	5850	4.9				
898	98	1.64	5560	5.2				
1040	85	1.42	5320	5.4				
423	210	3.48	5200	1.95	**RX87** **RXF87**	-	**DRN132L4**	120
476	184	3.09	5060	2.2				
533	165	2.76*	4930	2.5				
592	148	2.48	4800	2.7				
683	129	2.15	4630	3.0				125
762	115	1.93	4500	3.1				
919	96	1.60*	4270	3.3				
1055	83	1.39	4110	3.5				
605	145	2.43	3070	1.50	**RX77** **RXF77**	-	**DRN132L4**	100
690	127	2.13	3210	1.55				
782	112	1.88*	3310	1.65				
882	100	1.67	3270	1.75				105
1035	85	1.42	3140	1.80				

P_N = 11.0 kW

n_a min^{-1}	M_a Nm	i	F_{Ra} N	SEW f_B	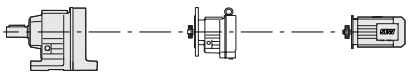			m kg
4.2	22800	349	120000	0.90	**R167** **RF167** **RM167**	**R107**	**DRN160M4**	900
5.0	19100	295	120000	1.05				
5.5	17800	270	120000	1.10				910
6.4	15000	229	120000	1.35				
7.4	13100	200	120000	1.55				1100
8.7	11000	169	120000	1.80				
4.5	22000	328	120000	0.90	**R167** **RF167** **RM167**	**R107**	**DRN160M4**	900
5.1	19500	291	120000	1.05				900
								1100

P_N = 11.0 kW

n_a min^{-1}	M_a Nm	i	F_{Ra} N	SEW f_B	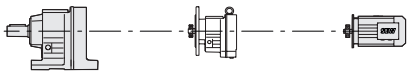			m kg
3.9	25000	376	120000	0.80	**R167**			860
4.4	22200	335	120000	0.90	**RF167**	**R97**	**DRN160M4**	860
4.9	20000	303	120000	1.00	**RM167**			1060
5.3	18400	279	120000	1.10				
6.9	14200	214	59800	0.90	**R147**			550
7.8	12600	189	63500	1.05	**RF147**	**R87**	**DRN160M4**	560
9.3	10600	159	67000	1.25	**RM147**			720
6.4	16400	229.71	120000	1.20				
7.9	13300	186.93*	120000	1.50				
9.6	10900	153.07	120000	1.85	**R167**			730
11	9980	139.98	120000	2.0	**RF167**	**-**	**DRN160M4**	730
12	8690	121.81*	120000	2.3	**RM167**			930
14	7670	107.49	120000	2.6				
16	6650	93.19	120000	3.0				
18	5910	82.91*	120000	3.4				
9.0	11600	163.31	65200	1.10				
10	10500	146.91	67100	1.25				
12	8550	119.86	69700	1.50				
13	7790	109.31	70500	1.65	**R147**			480
16	6750	94.60*	71600	1.95	**RF147**	**-**	**DRN160M4**	490
18	5950	83.47	72300	2.2	**RM147**			660
20	5140	72.09	72900	2.5				
22	4780	66.99	73100	2.7				
24	4360	61.09	73300	3.0				
28	3770	52.87	73700	3.5				
10	10100	141.12*	27800	0.80				
11	9140	128.18	47100	0.90				
13	8110	113.72	53100	1.00				
14	7360	103.20*	54700	1.10				
17	6330	88.70*	56500	1.25				
18	5770	80.91*	57400	1.40	**R137**			355
20	5240	73.49	58100	1.55	**RF137**	**-**	**DRN160M4**	375
23	4650	65.20	58800	1.70	**RM137**			485
25	4220	59.17*	59300	1.90				
29	3630	50.86*	59800	2.2				
33	3170	44.39	60200	2.5				
39	2690	37.65	60600	3.0				
45	2350	32.91	60800	3.4				
15	6910	96.95	43000	0.85				
17	6080	85.26	43000	1.00				
18	5860	82.17	43000	1.00				
19	5430	76.21	43000	1.10				
21	4890	68.61*	43000	1.25	**R127**			325
24	4430	62.13	43000	1.35	**RF127**	**-**	**DRN160M4**	335
27	3930	55.09	43000	1.55	**RM127**			435
30	3550	49.81	43000	1.70				
35	3010	42.22*	43000	2.0				
40	2630	36.88	43000	2.2				
48	2200	30.84	43000	2.5				
46	2290	32.18	43000	2.6				
51	2060	28.84	43000	2.9	**R127**			310
57	1860	26.04*	43000	3.2	**RF127**	**-**	**DRN160M4**	330
62	1690	23.65	43000	3.6	**RM127**			425

P_N = 11.0 kW

n_a min^{-1}	M_a Nm	i	F_{Ra} N	SEW f_B	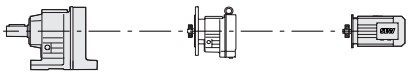			m kg
22	4680	65.60*	27200	0.90				
25	4240	59.41	27500	1.00				
28	3760	52.68	27000	1.15	**R107**			270
31	3400	47.63	26500	1.25	**RF107**	-	**DRN160M4**	275
36	2880	40.37*	25600	1.50	**RM107**			365
42	2510	35.26	24900	1.70				
50	2100	29.49	23900	2.0				
48	2190	30.77	24100	1.95				
53	1970	27.58	23500	2.2				
59	1780	24.90*	22900	2.4	**R107**			265
65	1610	22.62	22400	2.7	**RF107**	-	**DRN160M4**	270
73	1430	20.07	21700	3.0	**RM107**			355
81	1300	18.21	21200	3.3				
34	3050	42.78	17800	1.00				
40	2650	37.13	18900	1.15	**R97**			210
44	2370	33.25	18600	1.20	**RF97**	-	**DRN160M4**	230
53	1970	27.58	18000	1.35	**RM97**			280
59	1790	25.03	17600	1.60				
66	1600	22.37	17200	1.70				
73	1440	20.14	16900	1.80				
81	1300	18.24	16500	1.90				
91	1150	16.17	16000	2.1				
101	1040	14.62	15600	2.2	**R97**			210
119	880	12.39	15000	2.5	**RF97**	-	**DRN160M4**	225
136	770	10.83	14500	2.7	**RM97**			275
159	660	9.29	14200	3.1				
175	600	8.39	13800	3.4				
207	505	7.12	13100	3.9				
237	445	6.21	12600	4.3				
68	1530	21.51	13200	1.00				
77	1360	19.10	13000	1.05				
86	1220	17.08*	12700	1.15				
96	1090	15.35	12500	1.20				
111	950	13.33	12100	1.35				
123	850	11.93	11800	1.45	**R87**			170
149	705	9.90*	11300	1.65	**RF87**	-	**DRN160M4**	175
161	650	9.14*	11400	1.85	**RM87**			205
179	585	8.22	11100	2.0				
206	510	7.13	10700	2.1				
231	455	6.39	10400	2.2				
278	380	5.30*	9850	2.4				
135	775	10.88	4400	0.85				
153	690	9.64	5130	0.90				
190	550	7.74	4740	1.10	**R77**			140
217	485	6.79	5340	1.20	**RF77**	-	**DRN160M4**	150
246	425	5.99*	5800	1.25	**RM77**			175
277	380	5.31*	6140	1.35				

P_N = 11.0 kW

n_a min^{-1}	M_a Nm	i	F_{Ra} N	SEW f_B	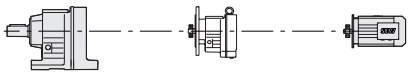			m kg
284	370	5.19	8950	1.90	**RX107 RXF107**	-	**DRN160M4**	210 225
317	330	4.65	8720	2.1				
351	300	4.20*	8510	2.8				
386	270	3.81	8300	3.1				
435	240	3.38	8050	3.4				
480	220	3.07	7840	3.8				
558	188	2.64*	7530	4.4				
326	325	4.52	7120	1.85	**RX97 RXF97**	-	**DRN160M4**	175 185
364	290	4.04	6940	2.1				
405	260	3.64*	6770	2.3				
447	235	3.30	6600	2.5				
504	210	2.92	6410	2.9				
557	188	2.64	6240	3.2				
658	160	2.24*	5970	3.7				
753	140	1.96	5750	4.1				
900	117	1.64	5470	4.3				
1040	101	1.42	5250	4.5				
424	250	3.48	5010	1.65	**RX87 RXF87**	-	**DRN160M4**	150 155
477	220	3.09	4890	1.85				
534	197	2.76*	4770	2.1				
594	177	2.48	4660	2.3				
684	154	2.15	4500	2.5				
764	138	1.93	4380	2.6				
921	114	1.60*	4170	2.8				
1060	99	1.39	4030	2.9				
607	173	2.43	1980	1.25	**RX77 RXF77**	-	**DRN160M4**	135 135
691	152	2.13	2220	1.30				
784	134	1.88*	2400	1.40				
884	119	1.67	2520	1.45				
1035	101	1.42	2630	1.55				

P_N = 15.0 kW

n_a min^{-1}	M_a Nm	i	F_{Ra} N	SEW f_B	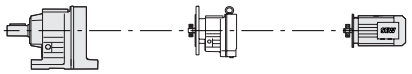			m kg
5.5	24400	270	120000	0.80	**R167 RF167 RM167**	**R107**	**DRN160L4**	920 920 1120
6.4	20600	229	120000	0.95				
7.4	18000	200	120000	1.10				
8.7	15100	169	120000	1.30				
5.6	24200	264	120000	0.85	**R167 RF167 RM167**	**R107**	**DRN160L4**	910 920 1110
6.5	20700	227	120000	0.95				
7.5	18100	198	120000	1.10				
6.4	22300	229.71	120000	0.90	**R167 RF167 RM167**	-	**DRN160L4**	740 750 940
7.9	18200	186.93*	120000	1.10				
9.6	14900	153.07	120000	1.35				
11	13600	139.98	120000	1.45				
12	11800	121.81*	120000	1.70				
14	10400	107.49	120000	1.90				
16	9060	93.19	120000	2.2				
18	8060	82.91*	120000	2.5				
20	7160	73.70*	120000	2.8				
22	6550	67.40	120000	3.1				

P_N = 15.0 kW

n_a min^{-1}	M_a Nm	i	F_{Ra} N	SEW f_B	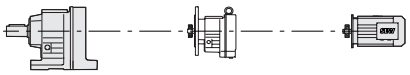			m kg
9.0	15900	163.31	38500	0.80				
10	14300	146.91	59000	0.90				
12	11600	119.86	65200	1.10				
13	10600	109.31	66900	1.20				
16	9190	94.60*	68900	1.40	**R147**			495
18	8110	83.47	70200	1.60	**RF147**	-	**DRN160L4**	500
20	7010	72.09	71300	1.85	**RM147**			670
22	6510	66.99	71800	2.0				
24	5940	61.09	72300	2.2				
28	5140	52.87	72900	2.5				
32	4530	46.65	73200	2.9				
14	10000	103.20*	28800	0.80				
17	8620	88.70*	51300	0.95				
18	7860	80.91*	53700	1.00				
20	7140	73.49	55100	1.10				
23	6340	65.20	56500	1.25	**R137**			370
25	5750	59.17*	57400	1.40	**RF137**	-	**DRN160L4**	390
29	4940	50.86*	58500	1.60	**RM137**			500
33	4310	44.39	59200	1.85				
39	3660	37.65	59800	2.2				
45	3200	32.91	60200	2.5				
53	2700	27.83	60500	2.8				
19	7410	76.21	43000	0.80				
21	6670	68.61*	43000	0.90				
24	6040	62.13	43000	1.00				
27	5350	55.09	43000	1.10	**R127**			340
30	4840	49.81	43000	1.25	**RF127**	-	**DRN160L4**	355
35	4100	42.22*	43000	1.45	**RM127**			450
40	3580	36.88	43000	1.60				
48	3000	30.84	43000	1.80				
46	3130	32.18	43000	1.90				
51	2800	28.84	43000	2.1				
57	2530	26.04*	43000	2.4	**R127**			325
62	2300	23.65	43000	2.6	**RF127**	-	**DRN160L4**	345
70	2040	20.98	43000	2.9	**RM127**			440
77	1850	19.04	43000	3.2				
90	1590	16.37*	43000	3.8				
31	4630	47.63	24400	0.95				
37	3920	40.37*	23900	1.10	**R107**			285
42	3430	35.26	23400	1.25	**RF107**	-	**DRN160L4**	290
50	2870	29.49	22600	1.50	**RM107**			380
48	2990	30.77	22800	1.45				
53	2680	27.58	22300	1.60				
59	2420	24.90*	21800	1.80				
65	2200	22.62	21400	1.95	**R107**			280
73	1950	20.07	20800	2.2	**RF107**	-	**DRN160L4**	285
81	1770	18.21	20400	2.4	**RM107**			375
94	1520	15.65	19600	2.8				
108	1330	13.66	19000	3.2				
					R97			230
53	2680	27.58	16500	1.00	**RF97**	-	**DRN160L4**	245
					RM97			295

P_N = 15.0 kW

n_a min^{-1}	M_a Nm	i	F_{Ra} N	SEW f_B	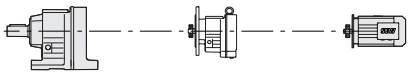			m kg
59	2430	25.03	16300	1.15	**R97** **RF97** **RM97**	-	**DRN160L4**	225 240 295
66	2170	22.37	16100	1.25				
73	1960	20.14	15800	1.35				
81	1770	18.24	15500	1.40				
91	1570	16.17	15200	1.55				
101	1420	14.62	14900	1.60				
119	1200	12.39	14400	1.80				
136	1050	10.83	13900	2.0				
159	900	9.29	13800	2.3				
176	820	8.39	13400	2.5				
207	690	7.12	12800	2.9				
237	605	6.21	12300	3.1				
86	1660	17.08*	11600	0.85	**R87** **RF87** **RM87**	-	**DRN160L4**	185 190 220
96	1490	15.35	11500	0.90				
111	1300	13.33	11300	1.00				
124	1160	11.93	11100	1.05				
149	960	9.90*	10700	1.25				
161	890	9.14*	10900	1.35				
179	800	8.22	10700	1.45				
207	695	7.13	10300	1.55				
231	620	6.39	10000	1.65				
278	515	5.30*	9570	1.75				

P_N = 15.0 kW

n_a min^{-1}	M_a Nm	i	F_{Ra} N	SEW f_B	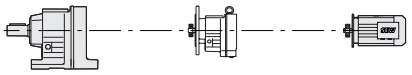			m kg
284	505	5.19	8420	1.40	**RX107** **RXF107**	-	**DRN160L4**	225 240
317	450	4.65	8240	1.55				
351	410	4.20*	8080	2.0				
386	370	3.81	7910	2.2				
436	330	3.38	7690	2.5				
480	300	3.07	7520	2.8				
558	255	2.64*	7240	3.2				
640	225	2.30	6990	3.7				
754	190	1.95	6690	4.0				
863	166	1.71	6450	4.3				
1020	140	1.44	6150	4.6				
326	440	4.52	6650	1.35	**RX97** **RXF97**	-	**DRN160L4**	190 200
365	395	4.04	6520	1.50				
405	355	3.64*	6380	1.70				
447	320	3.30	6250	1.85				
504	285	2.92	6100	2.1				
558	255	2.64	5960	2.3				
658	220	2.24*	5720	2.7				
753	190	1.96	5530	3.0				
901	159	1.64	5280	3.2				
1040	138	1.42	5080	3.3				
424	340	3.48	4310	1.20	**RX87** **RXF87**	-	**DRN160L4**	165 170
477	300	3.09	4500	1.35				
534	270	2.76*	4420	1.50				
594	240	2.48	4340	1.70				
684	210	2.15	4220	1.85				
764	187	1.93	4130	1.90				
921	155	1.60*	3960	2.0				
1060	135	1.39	3830	2.1				

P_N = 18.5 kW

n_a min^{-1}	M_a Nm	i	F_{Ra} N	SEW f_B	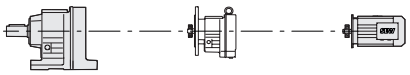			m kg
7.4	22200	200	120000	0.90	**R167** **RF167** **RM167**	**R107**	**DRN180M4**	940 950 1140
7.5	22300	198	120000	0.90	**R167** **RF167** **RM167**	**R107**	**DRN180M4**	930 940 1130
7.9	22300	186.93*	120000	0.90				
9.7	18300	153.07	120000	1.10				
11	16700	139.98	120000	1.20				
12	14600	121.81*	120000	1.35				
14	12800	107.49	120000	1.55	**R167**			770
16	11100	93.19	120000	1.80	**RF167**	**-**	**DRN180M4**	770
18	9910	82.91*	120000	2.0	**RM167**			970
20	8810	73.70*	120000	2.3				
22	8060	67.40	120000	2.5				
25	7010	58.65	120000	2.9				
12	14300	119.86	58400	0.90				
14	13100	109.31	62500	1.00				
16	11300	94.60*	65800	1.15				
18	9980	83.47	67800	1.30				
21	8620	72.09	69600	1.50	**R147**			520
22	8010	66.99	70300	1.60	**RF147**	**-**	**DRN180M4**	530
24	7300	61.09	71000	1.80	**RM147**			690
28	6320	52.87	71900	2.1				
32	5580	46.65	72500	2.3				
37	4820	40.29	73100	2.7				
18	9670	80.91*	37500	0.85				
20	8780	73.49	50600	0.90				
23	7790	65.20	53800	1.05				
25	7070	59.17*	55200	1.15	**R137**			390
29	6080	50.86*	56900	1.30	**RF137**	**-**	**DRN180M4**	415
33	5310	44.39	58000	1.50	**RM137**			530
39	4500	37.65	59000	1.80				
45	3930	32.91	59600	2.0				
53	3330	27.83	60100	2.3				
50	3530	29.57*	59900	2.2				
61	2880	24.12	60400	2.8	**R137**			380
67	2630	22.00*	60600	3.0	**RF137**	**-**	**DRN180M4**	405
78	2280	19.04*	60800	3.5	**RM137**			520
88	2010	16.80*	60900	4.0				
24	7430	62.13	43000	0.80				
27	6590	55.09	43000	0.90				
30	5950	49.81	43000	1.00	**R127**			365
35	5050	42.22*	43000	1.20	**RF127**	**-**	**DRN180M4**	375
40	4410	36.88	43000	1.30	**RM127**			470
48	3690	30.84	43000	1.45				
57	3110	26.04*	43000	1.95				
62	2830	23.65	43000	2.1				
70	2510	20.98	43000	2.4	**R127**			345
78	2280	19.04	43000	2.6	**RF127**	**-**	**DRN180M4**	370
90	1960	16.37*	43000	3.1	**RM127**			465
103	1710	14.29	43000	3.5				
167	1060	8.85	43000	3.7				
37	4830	40.37*	22100	0.90	**R107**			305
42	4210	35.26	22000	1.00	**RF107**	**-**	**DRN180M4**	310
50	3530	29.49	21500	1.20	**RM107**			400

P_N = 18.5 kW

n_a min^{-1}	M_a Nm	i	F_{Ra} N	SEW f_B	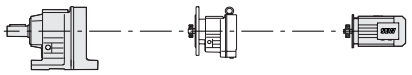			m kg
59	2980	24.90*	20900	1.45	**R107** **RF107** **RM107**	-	**DRN180M4**	300 305 395
65	2700	22.62	20500	1.60				
74	2400	20.07	20100	1.80				
81	2180	18.21	19700	2.0				
94	1870	15.65	19000	2.3				
108	1630	13.66	18400	2.6				
128	1390	11.59	17700	3.1				
146	1210	10.13	17100	3.6				
188	940	7.86	16300	3.2				
222	795	6.66	15500	3.7				
73	2410	20.14	14900	1.10	**R97** **RF97** **RM97**	-	**DRN180M4**	245 265 315
81	2180	18.24	14700	1.15				
91	1930	16.17	14400	1.25				
101	1750	14.62	14200	1.30				
119	1480	12.39	13800	1.50				
137	1290	10.83	13400	1.60				
159	1110	9.29	13400	1.85				
176	1000	8.39	13100	2.0				
208	850	7.12	12500	2.4				
238	745	6.21	12100	2.5				
284	620	5.20	11500	2.9				
328	540	4.50*	11100	3.0				
111	1590	13.33	10500	0.80	**R87** **RF87** **RM87**	-	**DRN180M4**	205 215 245
124	1430	11.93	10400	0.85				
149	1180	9.90*	10200	1.00				
162	1090	9.14*	10500	1.10				
180	980	8.22	10300	1.20				
207	850	7.13	10000	1.25				
231	765	6.39	9750	1.35				
279	635	5.30*	9330	1.45				

P_N = 18.5 kW

n_a min^{-1}	M_a Nm	i	F_{Ra} N	SEW f_B	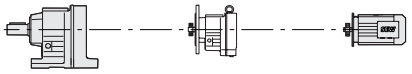			m kg
352	500	4.20*	7700	1.65	**RX107** **RXF107**	-	**DRN180M4**	245 260
387	455	3.81	7560	1.80				
437	405	3.38	7390	2.1				
481	365	3.07	7240	2.3				
560	315	2.64*	6990	2.6				
641	275	2.30	6770	3.0				
756	235	1.95	6500	3.3				
865	205	1.71	6280	3.5				
1025	173	1.44	6010	3.7				
406	435	3.64*	6050	1.35	**RX97** **RXF97**	-	**DRN180M4**	215 220
448	395	3.30	5950	1.50				
506	350	2.92	5820	1.70				
559	315	2.64	5710	1.90				
660	270	2.24*	5500	2.2				
755	235	1.96	5340	2.4				
903	196	1.64	5110	2.6				
1045	169	1.42	4930	2.7				

P_N = 18.5 kW

n_a min^{-1}	M_a Nm	i	F_{Ra} N	SEW f_B	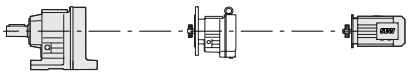			m kg
536	330	2.76*	3090	1.25				
596	295	2.48	3390	1.35				
686	255	2.15	3670	1.50	**RX87**	-	**DRN180M4**	190
766	230	1.93	3850	1.55	**RXF87**			195
924	191	1.60*	3760	1.65				
1060	166	1.39	3660	1.75				

P_N = 22 kW

n_a min^{-1}	M_a Nm	i	F_{Ra} N	SEW f_B	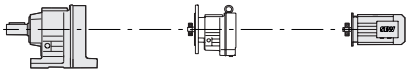			m kg
8.7	22300	169	120000	0.90	**R167** **RF167** **RM167**	**R107**	**DRN180L4**	950 960 1160
8.8	22500	168	120000	0.90	**R167** **RF167** **RM167**	**R107**	**DRN180L4**	950 960 1150
9.7	21800	153.07	120000	0.90				
11	19900	139.98	120000	1.00				
12	17300	121.81*	120000	1.15				
14	15300	107.49	120000	1.30				
16	13300	93.19	120000	1.50	**R167**			780
18	11800	82.91*	120000	1.70	**RF167**	-	**DRN180L4**	790
20	10500	73.70*	120000	1.90	**RM167**			980
22	9590	67.40	120000	2.1				
25	8340	58.65	120000	2.4				
29	7360	51.76	120000	2.7				
33	6380	44.87	120000	3.1				
14	15500	109.31	43100	0.85				
16	13500	94.60*	61700	0.95				
18	11900	83.47	64800	1.10				
20	10300	72.09	67400	1.25				
22	9530	66.99	68400	1.35	**R147**			530
24	8690	61.09	69500	1.50	**RF147**	-	**DRN180L4**	540
28	7520	52.87	70800	1.75	**RM147**			710
32	6640	46.65	71700	1.95				
37	5730	40.29	72400	2.3				
41	5070	35.64	72900	2.6				
49	4260	29.95	73400	3.1				
23	9270	65.20	44900	0.85				
25	8420	59.17*	52200	0.95				
29	7230	50.86*	54900	1.10	**R137**			410
33	6310	44.39	56500	1.25	**RF137**	-	**DRN180L4**	430
39	5360	37.65	58000	1.50	**RM137**			540
45	4680	32.91	58800	1.70				
53	3960	27.83	59500	1.95				
50	4210	29.57*	59300	1.85				
61	3430	24.12	60000	2.3				
67	3130	22.00*	60300	2.6	**R137**			400
78	2710	19.04*	60500	3.0	**RF137**	-	**DRN180L4**	420
88	2390	16.80*	60700	3.4	**RM137**			530
102	2060	14.51	60900	3.9				
115	1830	12.83	61000	4.4				

P_N = 22 kW

n_a min^{-1}	M_a Nm	i	F_{Ra} N	SEW f_B	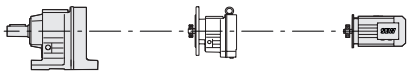			m kg
30	7090	49.81	43000	0.85	**R127**			380
35	6010	42.22*	43000	1.00	**RF127**	-	**DRN180L4**	390
40	5250	36.88	43000	1.10	**RM127**			485
48	4390	30.84	43000	1.25				
57	3700	26.04*	43000	1.60				
62	3360	23.65	43000	1.80				
70	2980	20.98	43000	2.0				
78	2710	19.04	43000	2.2	**R127**			365
90	2330	16.37*	43000	2.6	**RF127**	-	**DRN180L4**	385
103	2030	14.29	43000	3.0	**RM127**			480
122	1720	12.12	43000	3.5				
139	1510	10.59	43000	3.8				
167	1260	8.85	43000	3.1				
197	1070	7.51	43000	3.7				
42	5020	35.26	11500	0.85	**R107**			320
50	4190	29.49	20400	1.05	**RF107**	-	**DRN180L4**	330
					RM107			415
59	3540	24.90*	20000	1.20				
65	3220	22.62	19700	1.35				
74	2850	20.07	19300	1.50				
81	2590	18.21	19000	1.65				
94	2230	15.65	18400	1.95				
108	1940	13.66	17900	2.2	**R107**			315
127	1650	11.59	17300	2.6	**RF107**	-	**DRN180L4**	320
146	1440	10.13	16800	3.0	**RM107**			410
172	1220	8.56	16100	3.5				
188	1120	7.86	16000	2.7				
222	950	6.66	15300	3.1				
254	830	5.82	14800	3.6				
73	2860	20.14	14000	0.90				
81	2590	18.24	13900	0.95				
91	2300	16.17	13700	1.05				
101	2080	14.62	13500	1.10				
119	1760	12.39	13200	1.25				
136	1540	10.83	12900	1.35	**R97**			260
159	1320	9.29	13100	1.55	**RF97**	-	**DRN180L4**	280
176	1190	8.39	12800	1.70	**RM97**			330
208	1010	7.12	12300	2.0				
238	880	6.21	11900	2.1				
284	740	5.20	11300	2.4				
328	640	4.50*	10900	2.6				
149	1410	9.90*	9630	0.85				
162	1300	9.14*	10100	0.95				
180	1170	8.22	9940	1.00	**R87**			220
207	1010	7.13	9680	1.05	**RF87**	-	**DRN180L4**	230
231	910	6.39	9470	1.10	**RM87**			260
279	755	5.30*	9100	1.20				

P_N = 22 kW

n_a min^{-1}	M_a Nm	i	F_{Ra} N	SEW f_B	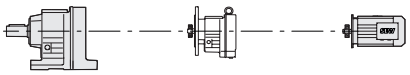			m kg
352	595	4.20*	7330	1.40				
387	545	3.81	7220	1.55				
436	480	3.38	7080	1.70				
481	435	3.07	6950	1.90				
559	375	2.64*	6750	2.2	**RX107**	-	**DRN180L4**	260
641	330	2.30	6550	2.5	**RXF107**			280
756	280	1.95	6310	2.8				
865	245	1.71	6100	2.9				
1025	205	1.44	5860	3.1				
406	520	3.64*	5720	1.15				
448	470	3.30	5650	1.25				
505	415	2.92	5550	1.45				
559	375	2.64	5460	1.60	**RX97**	-	**DRN180L4**	230
659	320	2.24*	5290	1.85	**RXF97**			235
755	280	1.96	5150	2.1				
903	235	1.64	4950	2.2				
1045	200	1.42	4780	2.3				
535	395	2.76*	1320	1.05				
595	355	2.48	1760	1.15				
686	305	2.15	2200	1.25	**RX87**	-	**DRN180L4**	205
766	275	1.93	2490	1.30	**RXF87**			210
923	230	1.60*	2790	1.40				
1060	198	1.39	3060	1.45				

P_N = 30 kW

n_a min^{-1}	M_a Nm	i	F_{Ra} N	SEW f_B	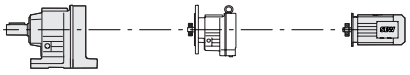			m kg
12	23600	121.81*	120000	0.85				
14	20800	107.49	120000	0.95				
16	18000	93.19	120000	1.10				
18	16000	82.91*	120000	1.25				
20	14300	73.70*	120000	1.40				
22	13000	67.40	120000	1.55	**R167**			890
25	11400	58.65	120000	1.75	**RF167**	-	**DRN200L4**	900
29	10000	51.76	120000	2.0	**RM167**			1090
33	8690	44.87	120000	2.3				
37	7730	39.92	120000	2.6				
43	6660	34.41	120000	3.0				
53	5410	27.96	120000	3.7				
62	4590	23.71	120000	4.1				
18	16200	83.47	34200	0.80				
21	14000	72.09	60600	0.95				
22	13000	66.99	62700	1.00				
24	11800	61.09	64900	1.10				
28	10200	52.87	67400	1.25	**R147**			640
32	9030	46.65	69100	1.45	**RF147**	-	**DRN200L4**	650
37	7800	40.29	70500	1.65	**RM147**			820
42	6900	35.64	71400	1.90				
49	5800	29.95	72400	2.2				
61	4680	24.19	73200	2.5				
72	3960	20.44	73600	3.0	**R147**			630
82	3490	18.04	73800	3.0	**RF147**	-	**DRN200L4**	640
95	3030	15.64	74000	4.3	**RM147**			810

P_N = 30 kW

n_a min^{-1}	M_a Nm	i	F_{Ra} N	SEW f_B	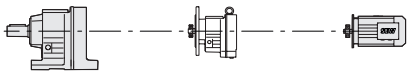			m kg
29	9840	50.86*	33600	0.80				
33	8590	44.39	51400	0.95	**R137**			510
39	7290	37.65	54800	1.10	**RF137**	-	**DRN200L4**	540
45	6370	32.91	56500	1.25	**RM137**			650
53	5390	27.83	57900	1.45				
61	4670	24.12	58800	1.70				
67	4260	22.00*	59200	1.90				
78	3690	19.04*	59800	2.2				
88	3250	16.80*	60200	2.5	**R137**			500
102	2810	14.51	59500	2.9	**RF137**	-	**DRN200L4**	530
115	2480	12.83	58300	3.2	**RM137**			640
137	2090	10.79	56600	3.8				
195	1470	7.59	53200	3.5				
232	1230	6.38	51200	4.1				
					R127			490
40	7140	36.88	43000	0.80	**RF127**	-	**DRN200L4**	500
48	5970	30.84	43000	0.90	**RM127**			600
71	4060	20.98	43000	1.50				
78	3690	19.04	43000	1.65				
90	3170	16.37*	43000	1.90				
104	2770	14.29	43000	2.2				
122	2350	12.12	43000	2.5	**R127**			470
140	2050	10.59	43000	2.8	**RF127**	-	**DRN200L4**	495
165	1730	8.96	43000	3.1	**RM127**			590
167	1710	8.85	43000	2.3				
197	1450	7.51	43000	2.7				
225	1270	6.56	43000	3.1				
267	1070	5.55	43000	3.7				
74	3880	20.07	17600	1.10				
81	3520	18.21	17400	1.20				
95	3030	15.65	17100	1.40				
108	2640	13.66	16800	1.65				
128	2240	11.59	16300	1.90	**R107**			425
146	1960	10.13	15900	2.2	**RF107**	-	**DRN200L4**	430
173	1660	8.56	15300	2.6	**RM107**			520
188	1520	7.86	15500	1.95				
222	1290	6.66	14800	2.3				
254	1130	5.82	14300	2.6				
301	950	4.92	13700	3.0				
101	2830	14.62	12000	0.80				
119	2400	12.39	11900	0.90				
137	2100	10.83	11800	1.00				
159	1800	9.29	12300	1.15	**R97**			370
176	1620	8.39	12000	1.25	**RF97**	-	**DRN200L4**	390
208	1380	7.12	11700	1.45	**RM97**			440
238	1200	6.21	11300	1.55				
285	1010	5.20	10900	1.75				
329	870	4.50*	10500	1.85				

P_N = 30 kW

n_a min^{-1}	M_a Nm	i	F_{Ra} N	SEW f_B	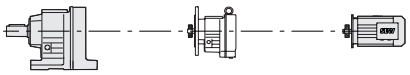			m kg
437	655	3.38	6370	1.25	**RX107 RXF107**	-	**DRN200L4**	370 385
482	595	3.07	6300	1.40				
561	510	2.64*	6180	1.60				
642	445	2.30	6050	1.85				
757	380	1.95	5870	2.0				
866	330	1.71	5710	2.1				
1025	280	1.44	5520	2.3				
506	565	2.92	3170	1.05	**RX97 RXF97**	-	**DRN200L4**	335 345
560	510	2.64	3600	1.15				
661	435	2.24*	4090	1.35				
756	380	1.96	4480	1.50				
904	315	1.64	4570	1.60				
1045	275	1.42	4450	1.65				

P_N = 37 kW

n_a min^{-1}	M_a Nm	i	F_{Ra} N	SEW f_B	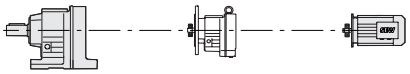			m kg
16	22200	93.19	120000	0.90	**R167 RF167 RM167**	-	**DRN225S4**	920 930 1120
18	19800	82.91*	120000	1.00				
20	17600	73.70*	120000	1.15				
22	16100	67.40	120000	1.25				
25	14000	58.65	120000	1.45				
29	12300	51.76	120000	1.60				
33	10700	44.87	120000	1.85				
37	9520	39.92	120000	2.1				
43	8200	34.41	120000	2.4				
53	6670	27.96	120000	3.0				
48	7320	30.71	120000	1.60	**R167 RF167 RM167**	-	**DRN225S4**	910 920 1120
60	5860	24.57	120000	2.8				
68	5210	21.85	120000	3.8				
78	4540	19.03	120000	4.4				
87	4050	16.98	120000	4.9				
22	16000	66.99	37000	0.80	**R147 RF147 RM147**	-	**DRN225S4**	670 680 850
24	14600	61.09	55600	0.90				
28	12600	52.87	63400	1.05				
32	11100	46.65	66100	1.15				
37	9610	40.29	68300	1.35				
42	8500	35.64	69700	1.55				
49	7140	29.95	71200	1.80				
61	5770	24.19	72400	2.1				
73	4870	20.44	73000	2.5	**R147 RF147 RM147**	-	**DRN225S4**	660 670 840
82	4300	18.04	73400	2.4				
95	3730	15.64	73700	3.5				
107	3320	13.91	73900	3.8				
39	8980	37.65	49600	0.90	**R137 RF137 RM137**	-	**DRN225S4**	550 570 680
45	7850	32.91	53700	1.00				
53	6630	27.83	56000	1.15				

P_N = 37 kW

n_a min^{-1}	M_a Nm	i	F_{Ra} N	SEW f_B	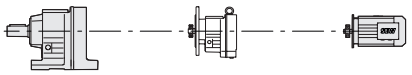			m kg
61	5750	24.12	57400	1.40				
67	5250	22.00*	58100	1.55				
78	4540	19.04*	57800	1.75				
88	4010	16.80*	57300	2.0				
102	3460	14.51	56500	2.3	**R137**			540
115	3060	12.83	55700	2.6	**RF137**	-	**DRN225S4**	560
137	2570	10.79	54400	3.1	**RM137**			670
170	2080	8.71	52500	3.8				
195	1810	7.59	51800	2.8				
232	1520	6.38	50000	3.4				
288	1230	5.15	47700	3.7				
71	5000	20.98	43000	1.20				
78	4540	19.04	43000	1.30				
91	3900	16.37*	43000	1.55				
104	3410	14.29	43000	1.75				
122	2890	12.12	43000	2.1	**R127**			500
140	2530	10.59	43000	2.3	**RF127**	-	**DRN225S4**	520
165	2140	8.96	43000	2.5	**RM127**			620
167	2110	8.85	43000	1.85				
197	1790	7.51	43000	2.2				
226	1560	6.56	43000	2.5				
267	1320	5.55	43000	3.0				
74	4780	20.07	16100	0.90				
81	4340	18.21	16100	1.00				
95	3730	15.65	15900	1.15				
108	3260	13.66	15700	1.30				
128	2760	11.59	15400	1.55	**R107**			455
146	2410	10.13	15100	1.80	**RF107**	-	**DRN225S4**	460
173	2040	8.56	14700	2.1	**RM107**			550
189	1870	7.86	15000	1.60				
222	1590	6.66	14400	1.85				
254	1390	5.82	14000	2.1				
301	1170	4.92	13400	2.5				

P_N = 37 kW

n_a min^{-1}	M_a Nm	i	F_{Ra} N	SEW f_B	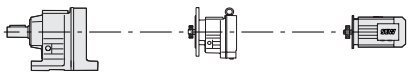			m kg
438	810	3.38	4530	1.05				
483	730	3.07	5010	1.15				
561	630	2.64*	5580	1.30	**RX107**			400
643	550	2.30	5610	1.50	**RXF107**	-	**DRN225S4**	420
758	465	1.95	5480	1.65				
868	405	1.71	5370	1.75				
1025	345	1.44	5220	1.85				

P_N = 45 kW

n_a min^{-1}	M_a Nm	i	F_{Ra} N	SEW f_B	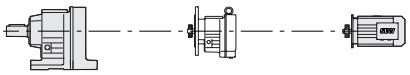			m kg
18	24000	82.91*	120000	0.85				
20	21400	73.70*	120000	0.95				
22	19500	67.40	120000	1.00				
25	17000	58.65	120000	1.20				
29	15000	51.76	120000	1.35	**R167**			920
33	13000	44.87	120000	1.55	**RF167**	-	**DRN225M4**	930
37	11600	39.92	120000	1.75	**RM167**			1120
43	9980	34.41	120000	2.0				
53	8110	27.96	120000	2.5				
63	6880	23.71	120000	2.7				
48	8900	30.71	120000	1.30				
60	7120	24.57	120000	2.3	**R167**			910
68	6330	21.85	120000	3.2	**RF167**	-	**DRN225M4**	920
78	5520	19.03	120000	3.6	**RM167**			1120
87	4920	16.98	120000	4.1				
28	15300	52.87	46000	0.85				
32	13500	46.65	61600	0.95				
37	11700	40.29	65100	1.10	**R147**			670
42	10300	35.64	67300	1.25	**RF147**	-	**DRN225M4**	680
49	8680	29.95	69500	1.50	**RM147**			850
61	7010	24.19	71300	1.70				
73	5930	20.44	72300	2.0				
82	5230	18.04	72800	2.0				
95	4530	15.64	73200	2.9	**R147**			660
107	4030	13.91	73500	3.1	**RF147**	-	**DRN225M4**	670
124	3480	11.99	73800	3.7	**RM147**			840
204	2100	7.25	74300	4.1				
45	9540	32.91	40100	0.85	**R137**			550
53	8070	27.83	51300	0.95	**RF137**	-	**DRN225M4**	570
					RM137			680
61	6990	24.12	52500	1.15				
67	6380	22.00*	53000	1.25				
78	5520	19.04*	53400	1.45				
88	4870	16.80*	53400	1.65				
102	4210	14.51	53100	1.90	**R137**			540
115	3720	12.83	52700	2.2	**RF137**	-	**DRN225M4**	560
137	3130	10.79	51900	2.6	**RM137**			670
170	2530	8.71	50500	3.1				
195	2200	7.59	50100	2.3				
232	1850	6.38	48600	2.8				
288	1490	5.15	46600	3.1				
71	6080	20.98	43000	1.00				
78	5520	19.04	43000	1.10				
91	4750	16.37*	43000	1.25				
104	4140	14.29	43000	1.45				
122	3510	12.12	43000	1.70	**R127**			500
140	3070	10.59	43000	1.85	**RF127**	-	**DRN225M4**	520
165	2600	8.96	43000	2.1	**RM127**			620
167	2570	8.85	43000	1.55				
197	2180	7.51	43000	1.80				
226	1900	6.56	43000	2.1				
267	1610	5.55	43000	2.4				

P_N = 45 kW

n_a min^{-1}	M_a Nm	i	F_{Ra} N	SEW f_B	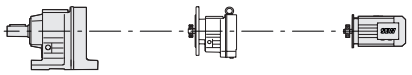			m kg
95	4540	15.65	14600	0.95				
108	3960	13.66	14600	1.10				
128	3360	11.59	14400	1.30				
146	2940	10.13	14300	1.45	**R107**			455
173	2480	8.56	14000	1.75	**RF107**	-	**DRN225M4**	460
189	2280	7.86	14400	1.30	**RM107**			550
222	1930	6.66	13900	1.55				
254	1690	5.82	13500	1.75				
301	1430	4.92	13000	2.0				

P_N = 45 kW

n_a min^{-1}	M_a Nm	i	F_{Ra} N	SEW f_B	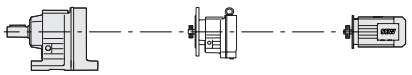			m kg
438	980	3.38	1450	0.85				
483	890	3.07	2160	0.95				
561	765	2.64*	3040	1.10	**RX107**			400
643	670	2.30	3700	1.25	**RXF107**	-	**DRN225M4**	420
758	565	1.95	4250	1.35				
868	495	1.71	4590	1.40				
1025	420	1.44	4880	1.55				

P_N = 55 kW

n_a min^{-1}	M_a Nm	i	F_{Ra} N	SEW f_B	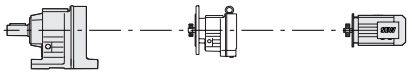			m kg
25	20800	58.65	120000	0.95				
29	18300	51.76	120000	1.10				
33	15900	44.87	120000	1.25	**R167**			1070
37	14100	39.92	120000	1.40	**RF167**	-	**DRN250M4**	1080
43	12200	34.41	120000	1.65	**RM167**			1270
53	9910	27.96	120000	2.0				
63	8400	23.71	120000	2.2				
60	8710	24.57	120000	1.90				
68	7740	21.85	120000	2.6	**R167**			1070
78	6750	19.03	120000	3.0	**RF167**	-	**DRN250M4**	1070
87	6020	16.98	120000	3.3	**RM167**			1270
102	5130	14.48	120000	3.8				
124	4250	11.99	120000	4.5				
32	16500	46.65	28000	0.80				
37	14300	40.29	58900	0.90	**R147**			820
42	12600	35.64	63400	1.05	**RF147**	-	**DRN250M4**	830
49	10600	29.95	66900	1.20	**RM147**			1000
61	8570	24.19	69700	1.40				
73	7240	20.44	71100	1.65				
82	6390	18.04	71900	1.65				
95	5540	15.64	72600	2.4	**R147**			810
107	4930	13.91	73000	2.6	**RF147**	-	**DRN250M4**	820
124	4250	11.99	73400	3.1	**RM147**			990
152	3450	9.74	73800	3.8				
204	2570	7.25	74200	3.4				
252	2090	5.89	72400	4.2				

P_N = 55 kW

n_a min^{-1}	M_a Nm	i	F_{Ra} N	SEW f_B	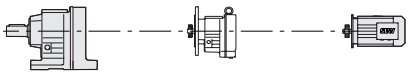			m kg
78	6750	19.04*	47800	1.20				
88	5950	16.80*	48500	1.35				
102	5140	14.51	48900	1.55				
115	4550	12.83	49000	1.75	**R137**			690
137	3820	10.79	48700	2.1	**RF137**	-	**DRN250M4**	710
170	3090	8.71	48000	2.5	**RM137**			820
195	2690	7.59	48100	1.90				
232	2260	6.38	46900	2.3				
288	1830	5.15	45200	2.5				
91	5800	16.37*	43000	1.05				
104	5060	14.29	43000	1.20				
122	4290	12.12	43000	1.40				
140	3750	10.59	43000	1.50	**R127**			650
165	3170	8.96	43000	1.70	**RF127**	-	**DRN250M4**	670
167	3140	8.85	43000	1.25	**RM127**			770
197	2660	7.51	43000	1.50				
226	2330	6.56	43000	1.70				
267	1970	5.55	43000	2.0				

P_N = 75 kW

n_a min^{-1}	M_a Nm	i	F_{Ra} N	SEW f_B	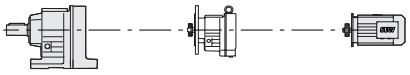			m kg
29	25000	51.76	120000	0.80				
33	21700	44.87	120000	0.90				
37	19300	39.92	120000	1.05	**R167**			1120
43	16600	34.41	120000	1.20	**RF167**	-	**DRN280S4**	1130
53	13500	27.96	120000	1.50	**RM167**			1320
63	11500	23.71	120000	1.65				
60	11900	24.57	120000	1.40				
68	10600	21.85	120000	1.90				
78	9200	19.03	120000	2.2	**R167**			1110
87	8210	16.98	120000	2.4	**RF167**	-	**DRN280S4**	1120
102	7000	14.48	120000	2.8	**RM167**			1320
124	5800	11.99	116600	3.3				
145	4950	10.24	112700	3.7				
49	14500	29.95	56700	0.90	**R147**			870
61	11700	24.19	65100	1.00	**RF147**	-	**DRN280S4**	880
					RM147			1050
73	9880	20.44	68000	1.20				
82	8720	18.04	69500	1.20				
95	7560	15.64	70800	1.70				
107	6720	13.91	71600	1.85				
124	5790	11.99	72400	2.2	**R147**			860
152	4710	9.74	73100	2.8	**RF147**	-	**DRN280S4**	870
179	3990	8.26	73500	3.3	**RM147**			1040
204	3500	7.25	73100	2.5				
252	2850	5.89	70100	3.1				
297	2410	5.00	67600	3.6				

P_N = 90 kW

n_a min^{-1}	M_a Nm	i	F_{Ra} N	SEW f_B	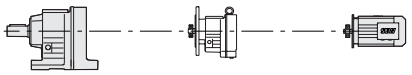			m kg
37	23200	39.92	120000	0.85	**R167**			1240
43	20000	34.41	120000	1.00	**RF167**	-	**DRN280M4**	1240
53	16200	27.96	120000	1.25	**RM167**			1440
62	13800	23.71	120000	1.35				
68	12700	21.85	120000	1.60				
78	11000	19.03	120000	1.80	**R167**			1230
87	9860	16.98	120000	2.0	**RF167**	-	**DRN280M4**	1240
102	8400	14.48	117300	2.4	**RM167**			1430
123	6960	11.99	113500	2.7				
145	5940	10.24	110100	3.1				
95	9070	15.64	69000	1.45				
106	8070	13.91	70200	1.55				
124	6960	11.99	71400	1.85	**R147**			970
152	5650	9.74	72500	2.3	**RF147**	-	**DRN280M4**	980
179	4790	8.26	73000	2.7	**RM147**			1150
204	4210	7.25	70900	2.1				
251	3420	5.89	68300	2.5				
296	2900	5.00	66100	3.0				

P_N = 110 kW

n_a min^{-1}	M_a Nm	i	F_{Ra} N	SEW f_B	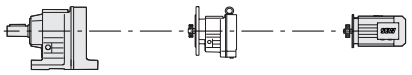			m kg
43	24300	34.41	115800	0.80	**R167**			1480
53	19700	27.96	117100	1.00	**RF167**	-	**DRN315S4**	1490
63	16700	23.71	116900	1.10	**RM167**			1680
78	13400	19.03	115500	1.50	**R167** **RF167** **RM167**	-	**DRN315S4/ ERF/NS**	1470 1480 1680
88	12000	16.98	114300	1.65				
103	10200	14.48	112200	1.95	**R167**			1470
124	8470	11.99	109200	2.2	**RF167**	-	**DRN315S4**	1480
145	7230	10.24	106400	2.6	**RM167**			1680

P_N = 132 kW

n_a min^{-1}	M_a Nm	i	F_{Ra} N	SEW f_B	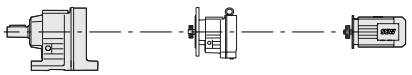			m kg
53	23700	27.96	106500	0.85	**R167**			1500
63	20100	23.71	107900	0.95	**RF167**	-	**DRN315M4**	1510
					RM167			1700
78	16100	19.03	108300	1.25	**R167**			1490
88	14400	16.98	107800	1.40	**RF167**	-	**DRN315M4/ ERF/NS**	1500
					RM167			1700
103	12300	14.48	106700	1.60	**R167**			1490
124	10200	11.99	104700	1.85	**RF167**	-	**DRN315M4**	1500
145	8670	10.24	102600	2.1	**RM167**			1700

P_N = 160 kW

n_a min^{-1}	M_a Nm	i	F_{Ra} N	SEW f_B	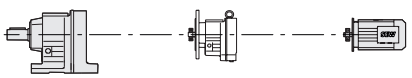			m kg
103	14900	14.48	99700	1.30	**R167**			1630
124	12300	11.99	98900	1.55	**RF167**	-	**DRN315L4**	1630
145	10500	10.24	97600	1.75	**RM167**			1830

4.2.3 Selection tables for low output speeds R..R..DRN.. in Nm

$M_{a\,max}$ = 130 Nm

n_a min^{-1}	i	F_{Ra} N	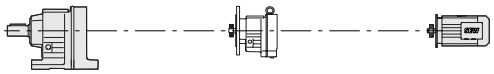			m kg
0.16	8612	3540	**R27 RF27**	**R17**	**DRN63MS4**	12 12
0.19	7425	3540				
0.2	6921	3540				
0.23	6050	3540				
0.26	5217	3540				
0.3	4661	3540				
0.34	4073	3540				
0.39	3516	3540				
0.44	3160	3540				
0.5	2763	3540				
0.57	2414	3540				
0.65	2110	3540				
0.74	1862	3540				
0.85	1625	3540				
0.96	1434	3540				
1.1	1254	3540				
0.76	1822	3540	**R27 RF27**	**R17**	**DRN63MS4**	12 12
0.87	1580	3540				
0.94	1464	3540				
1.1	1270	3540				
1.3	1100	3540				
1.4	972	3540				
1.6	840	3540				
1.9	741	3540				
2.1	654	3540				
2.4	566	3540				
2.8	499	3540				
1.3	1101	3540	**R27 RF27**	**R17**	**DRN63MS4**	12 12
1.4	962	3540				
1.6	848	3540				
1.9	743	3540				
2.1	649	3540				
2.4	567	3540				
2.7	509	3540				
3.2	432	3540				
3.6	387	3540				
4.1	339	3540				
4.7	296	3540				
5.3	259	3540				
6	229	3540				
6.9	200	3540				
3.1	440	3540	**R27 RF27**	**R17**	**DRN63MS4**	11 11
3.6	381	3540				
4.2	329	3540				
4.8	290	3540				
5.4	256	3540				
6.1	227	3540				
6.8	203	3540				
7.7	179	3540	**R27 RF27**	**R17**	**DRN63M4**	12 12
8.8	156	3540				
10	135	3540				
12	118	3540				

$M_{a\,max}$ = 130 Nm

n_a min^{-1}	i	F_{Ra} N	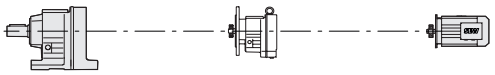			m kg
7.8	177	3540	**R27 RF27**	**R17**	**DRN63M4**	13
8.3	166	3540				
9.1	150	3540				
9.8	141	3540				12
11	124	3540				
13	104	3540	**R27 RF27**	**R17**	**DRN71MS4**	13
16	90	3540				13
13	110	3540	**R27 RF27**	**R17**	**DRN71MS4**	13
15	94	3540				13

$M_{a\,max}$ = 200 Nm

n_a min^{-1}	i	F_{Ra} N	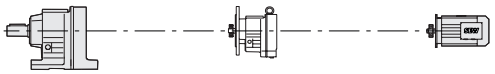			m kg
0.16	8595	4240	**R37 RF37**	**R17**	**DRN63MS4**	18
0.19	7411	4240				
0.2	6907	4240				
0.23	6038	4240				
0.27	5206	4240				
0.3	4651	4240				
0.34	4065	4240				
0.38	3658	4240				
0.44	3154	4240				19
0.5	2757	4240				
0.57	2409	4240				
0.66	2106	4240				
0.74	1856	4240				
0.85	1622	4240				
0.96	1431	4240				
1.1	1251	4240				
0.76	1818	4240	**R37 RF37**	**R17**	**DRN63MS4**	18
0.88	1576	4240				
1	1359	4240				
1.1	1267	4240				
1.3	1098	4240				
1.4	970	4240				19
1.7	839	4240				
1.9	740	4240				
2.1	653	4240				
2.4	577	4240				
2.8	498	4240				
1.3	1099	4240	**R37 RF37**	**R17**	**DRN63MS4**	18
1.4	960	4240				
1.6	847	4240				
1.9	741	4240				
2.1	647	4240				
2.4	566	4240				19
2.7	508	4240				
3.2	431	4240				
3.6	387	4240				
4.1	338	4240				
4.7	296	4240				
3.1	439	4240	**R37 RF37**	**R17**	**DRN63MS4**	17
3.7	378	4240				
4.2	328	4240				19
4.8	289	4240				

$M_{a\,max}$ = 200 Nm

n_a min^{-1}	i	F_{Ra} N	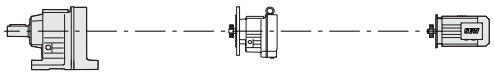			m kg
5.2	265	4240	**R37 RF37**	**R17**	**DRN63M4**	18
6.1	226	4240				20
6.8	202	4240				
5.3	259	4240	**R37 RF37**	**R17**	**DRN63M4**	18
6	228	4240				20
6.9	199	4240				
7.9	179	4240	**R37 RF37**	**R17**	**DRN71MS4**	19
9	156	4240				20
10	135	4240				
8.2	172	4240	**R37 RF37**	**R17**	**DRN71MS4**	19
9.4	150	4240				20
11	124	4240	**R37 RF37**	**R17**	**DRN71M4**	20
11	130	4240				22
13	110	4240				
15	94	4240				
11	127	4240	**R37 RF37**	**R17**	**DRN71M4**	20
14	104	4240				21
16	90	4240				

$M_{a\,max}$ = 300 Nm

n_a min^{-1}	i	F_{Ra} N	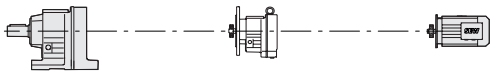			m kg
0.1	13598	4990	**R47 RF47**	**R37**	**DRN63MS4**	29
0.11	12472	4990				29
0.13	10619	4990				
0.15	9155	4990				
0.16	8534	4990				
0.18	7460	4990				
0.2	6993	4990				
0.22	6171	4990				
0.25	5624	4990				
0.28	4849	4990				
0.31	4520	4990				
0.35	3951	4990				
0.37	3704	4990				
0.42	3268	4990				
0.48	2898	4990				
0.56	2463	4990				
0.48	2856	4990	**R47 RF47**	**R37**	**DRN63MS4**	29
0.53	2625	4990				29
0.61	2246	4990				
0.71	1948	4990				
0.76	1821	4990				
0.88	1573	4990				
1.2	1193	4990				
1.4	1020	4990				
1.5	955	4990				
1.7	804	4990				
2.1	673	4990				
2.4	572	4990				
2.7	510	4990				

$M_{a\,max}$ = 300 Nm

n_a min^{-1}	i	F_{Ra} N	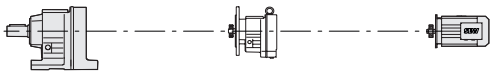			m kg
0.53	2598	4990	**R47 RF47**	**R37**	**DRN63MS4**	29
0.58	2383	4990				
0.68	2029	4990				
0.79	1749	4990				
0.85	1630	4990				
0.97	1425	4990				
1	1336	4990				
1.2	1179	4990				
1.3	1074	4990				29
1.5	927	4990				
1.6	863	4990				
1.8	755	4990				
2	708	4990				
2.2	624	4990				
2.5	554	4990				
2.9	471	4990				
2.5	546	4990	**R47 RF47**	**R37**	**DRN63MS4**	28
2.8	502	4990				
3.2	429	4990				29
3.2	436	4990	**R47 RF47**	**R37**	**DRN63M4**	29
3.4	408	4990				
4	344	4990				29
3.7	372	4990	**R47 RF47**	**R37**	**DRN63M4**	29
4	348	4990				
4.6	301	4990				29
5.5	255	4990	**R47 RF47**	**R37**	**DRN71MS4**	30
6.2	228	4990				30
7.3	195	4990	**R47 RF47**	**R37**	**DRN71M4**	31
7.8	182	4990				
9.2	154	4990				31
11	129	4990	**R47 RF47**	**R37**	**DRN80MK4**	33
13	109	4990				
15	98	4990				33

$M_{a\,max}$ = 450 Nm

n_a min^{-1}	i	F_{Ra} N	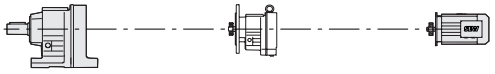			m kg
0.1	14369	7100	**R57 RF57 RM57**	**R37**	**DRN63MS4**	35
0.11	12095	7100				
0.13	10860	7100				
0.15	9445	7100				
0.16	8480	7100				
0.19	7312	7100				
0.21	6521	7100				
0.25	5585	7100				38
0.28	4928	7100				
0.32	4378	7100				
0.36	3873	7100				
0.41	3344	7100				
0.47	2907	7100				
0.54	2567	7100				50
0.61	2244	7100				
0.7	1967	7100				

$M_{a\,max}$ = 450 Nm

n_a min^{-1}	i	F_{Ra} N	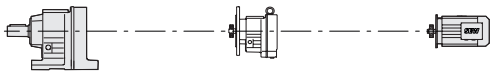			m kg
0.47	2957	7100				
0.55	2508	7100				
0.6	2309	7100				
0.69	1991	7100				
0.78	1768	7100				
0.91	1520	7100	**R57** **RF57** **RM57**	**R37**	**DRN63MS4**	34 37 49
1	1342	7100				
1.2	1164	7100				
1.3	1027	7100				
1.5	894	7100				
1.7	805	7100				
2	683	7100				
0.8	1732	7100				
0.89	1555	7100				
0.99	1399	7100	**R57**			34
1.2	1189	7100	**RF57**	**R37**	**DRN63MS4**	38
1.3	1034	7100	**RM57**			50
1.8	782	7100				
2	678	7100				
2.3	603	7100	**R57**			34
2.6	534	7100	**RF57**	**R37**	**DRN63M4**	38
3	454	7100	**RM57**			50
2.3	604	7100	**R57**			35
2.6	537	7100	**RF57**	**R37**	**DRN63M4**	39
2.9	471	7100	**RM57**			51
3.4	410	7100	**R57** **RF57** **RM57**	**R37**	**DRN71MS4**	35 38 50
3.9	357	7100	**R57**			36
4.4	319	7100	**RF57** **RM57**	**R37**	**DRN71MS4**	39 51
3.9	359	7100	**R57**			35
4.3	324	7100	**RF57** **RM57**	**R37**	**DRN71MS4**	38 50
4.9	290	7100				
5.4	262	7100	**R57**			36
5.7	246	7100	**RF57** **RM57**	**R37**	**DRN71M4**	39 51
6.4	220	7100				
5.2	273	7100	**R57**			37
5.9	241	7100	**RF57**	**R37**	**DRN71M4**	40
6.6	215	7100	**RM57**			52
7.6	188	7100	**R57**			38
9	159	7100	**RF57**	**R37**	**DRN80MK4**	42
9.8	146	7100	**RM57**			54
7.7	187	7100	**R57**			39
8.7	164	7100	**RF57**	**R37**	**DRN80MK4**	43
10	142	7100	**RM57**			55
11	134	7100	**R57** **RF57** **RM57**	**R37**	**DRN80M4**	42 45 57

$M_{a\,max}$ = 600 Nm

n_a min^{-1}	i	F_{Ra} N	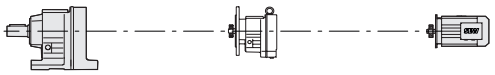			m kg
0.09	15361	7560				
0.11	12931	7560				
0.12	11996	7560				
0.14	10097	7560				
0.15	9066	7560				
0.18	7816	7560				
0.2	6732	7560	**R67**			41
0.23	5970	7560	**RF67**	**R37**	**DRN63MS4**	44
0.26	5268	7560	**RM67**			60
0.29	4680	7560				
0.33	4136	7560				
0.39	3566	7560				
0.44	3125	7560				
0.5	2745	7560				
0.57	2403	7560				
0.51	2682	7560				
0.56	2460	7560				
0.66	2094	7560				
0.76	1805	7560				
0.85	1629	7560	**R67**			40
0.94	1471	7560	**RF67**	**R37**	**DRN63MS4**	43
1	1379	7560	**RM67**			59
1.2	1109	7560				
1.4	956	7560				
1.6	891	7560				
0.65	2136	7560				
0.75	1852	7560				
0.84	1652	7560	**R67**			41
0.96	1432	7560	**RF67**	**R37**	**DRN63MS4**	44
1.1	1259	7560	**RM67**			60
1.3	1106	7560				
1.7	836	7560				
1.8	750	7560	**R67**			42
2.1	646	7560	**RF67**	**R37**	**DRN63M4**	45
2.4	574	7560	**RM67**			61
1.9	730	7560	**R67**			41
2.1	644	7560	**RF67**	**R37**	**DRN63M4**	44
2.4	571	7560	**RM67**			60
2.8	495	7560	**R67**			42
3.2	438	7560	**RF67**	**R37**	**DRN71MS4**	45
			RM67			61
2.9	486	7560	**R67**			42
			RF67	**R37**	**DRN71MS4**	45
			RM67			61
3.2	443	7560	**R67**			41
			RF67	**R37**	**DRN71MS4**	45
			RM67			60
3.7	384	7560				
3.9	359	7560	**R67**			43
4.6	310	7560	**RF67**	**R37**	**DRN71M4**	46
5.4	264	7560	**RM67**			62
3.7	388	7560	**R67**			44
4.1	344	7560	**RF67**	**R37**	**DRN71M4**	47
4.8	294	7560	**RM67**			63

$M_{a\,max}$ = 600 Nm

n_a min^{-1}	i	F_{Ra} N	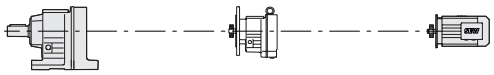			m kg
5.5	261	7560	**R67**			46
6.1	234	7560	**RF67**	**R37**	**DRN80MK4**	49
7.2	200	7560	**RM67**			65
6.1	235	7560	**R67**			45
7.1	201	7560	**RF67**	**R37**	**DRN80MK4**	48
7.9	181	7560	**RM67**			64
8.2	176	7560	**R67**			49
9.1	158	7560	**RF67**	**R37**	**DRN80M4**	52
			RM67			68
9.1	159	7560	**R67**			48
			RF67	**R37**	**DRN80M4**	51
			RM67			67

$M_{a\,max}$ = 820 Nm

n_a min^{-1}	i	F_{Ra} N	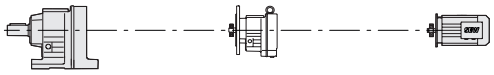			m kg
0.08	16370	9920				
0.09	15015	9920				
0.1	13885	9920				
0.11	12783	9920				
0.13	11021	9920				
0.14	9788	9920				
0.16	8714	9920				
0.18	7617	9920	**R77**			47
0.2	6770	9920	**RF77**	**R37**	**DRN63MS4**	52
0.24	5838	9920	**RM77**			77
0.27	5184	9920				
0.31	4470	9920				
0.35	3999	9920				
0.4	3488	9920				
0.45	3053	9920				
0.52	2671	9920				
0.44	3151	9920				
0.48	2890	9920				
0.56	2460	9920				
0.65	2121	9920	**R77**			45
0.7	1977	9920	**RF77**	**R37**	**DRN63MS4**	51
0.8	1728	9920	**RM77**			76
0.85	1620	9920				
0.97	1430	9920				
1.1	1303	9920				
0.59	2345	9920				
0.67	2070	9920				
0.76	1822	9920	**R77**			46
0.87	1580	9920	**RF77**	**R37**	**DRN63MS4**	52
0.99	1394	9920	**RM77**			77
1.1	1218	9920				
1.2	1124	9920				
1.3	1047	9920	**R77**			46
1.5	915	9920	**RF77**	**R37**	**DRN63M4**	52
1.6	858	9920	**RM77**			77
1.3	1084	9920	**R77**			47
1.5	940	9920	**RF77**	**R37**	**DRN63M4**	53
1.7	821	9920	**RM77**			78

$M_{a\,max}$ = 820 Nm

n_a min^{-1}	i	F_{Ra} N	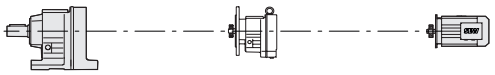			m kg
1.9	731	9920	**R77**			48
2.2	646	9920	**RF77**	**R37**	**DRN71MS4**	53
2.5	560	9920	**RM77**			78
1.9	757	9920	**R77**			47
2.1	671	9920	**RF77**	**R37**	**DRN71MS4**	53
2.5	571	9920	**RM77**			78
2.7	520	9920	**R77**			48
3.1	451	9920	**RF77**	**R37**	**DRN71M4**	54
3.4	422	9920	**RM77**			79
3.9	365	9920				
2.9	488	9920	**R77**			49
3.3	436	9920	**RF77**	**R37**	**DRN71M4**	55
3.8	373	9920	**RM77**			80
4.4	327	9920	**R77**			51
5	289	9920	**RF77**	**R37**	**DRN80MK4**	57
5.5	260	9920	**RM77**			82
4.6	310	9920	**R77**			50
5.2	276	9920	**RF77**	**R37**	**DRN80MK4**	56
			RM77			81
6.1	236	9920	**R77**			54
6.5	221	9920	**RF77**	**R37**	**DRN80M4**	59
7.7	186	9920	**RM77**			84
6.4	224	9920	**R77**			55
7.3	197	9920	**RF77**	**R37**	**DRN80M4**	60
			RM77			85
8.6	169	9920	**R77**			60
9.8	149	9920	**RF77**	**R37**	**DRN90S4**	66
			RM77			91

$M_{a\,max}$ = 1550 Nm

n_a min^{-1}	i	F_{Ra} N	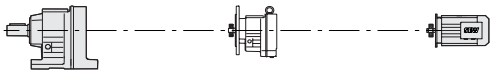			m kg
0.08	17452	12500				
0.09	15310	12500				
0.1	13813	12500				
0.11	12025	12500				
0.13	10549	12500				
0.15	9244	12500				
0.17	8109	12500	**R87**			86
0.2	7038	16900	**RF87**	**R57**	**DRN63MS4**	93
0.22	6174	16900	**RM87**			125
0.25	5449	16900				
0.29	4831	16900				
0.33	4206	16900				
0.37	3744	16900				
0.43	3233	16900				
0.48	2873	12500				
0.34	4020	16900				
0.37	3703	16900	**R87**			85
0.43	3182	16900	**RF87**	**R57**	**DRN63MS4**	92
0.5	2770	16900	**RM87**			120
0.53	2595	16900				
0.55	2518	12500	**R87**			87
0.62	2209	12500	**RF87**	**R57**	**DRN63M4**	94
0.7	1961	16900	**RM87**			125

$M_{a\,max}$ = 1550 Nm

n_a min^{-1}	i	F_{Ra} N	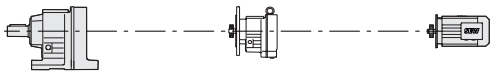			m kg
0.65	2129	16900	**R87**	**R57**	**DRN63M4**	86
0.71	1930	16900	**RF87**			93
0.79	1733	16900	**RM87**			120
0.92	1489	16900				
0.79	1737	12500	**R87**	**R57**	**DRN63M4**	86
0.9	1524	12500	**RF87**			93
			RM87			125
1	1395	16900	**R87**	**R57**	**DRN71MS4**	86
1.1	1232	16900	**RF87**			93
1.2	1145	16900	**RM87**			125
1.1	1303	12500	**R87**	**R57**	**DRN71MS4**	87
1.2	1143	12500	**RF87**			94
			RM87			125
1.4	994	16900	**R87**	**R57**	**DRN71M4**	89
1.6	881	16900	**RF87**			96
			RM87			125
1.4	1008	12500	**R87**	**R57**	**DRN71M4**	88
1.6	885	16900	**RF87**			95
1.8	776	16900	**RM87**			125
1.4	1037	16900	**R87**	**R57**	**DRN71M4**	87
1.5	931	16900	**RF87**			95
1.8	802	16900	**RM87**			125
1.9	754	16900				
2.1	685	16900	**R87**	**R57**	**DRN80MK4**	90
2.4	599	12500	**RF87**			98
2.7	525	12500	**RM87**			125
2.2	649	16900	**R87**	**R57**	**DRN80MK4**	90
2.5	580	16900	**RF87**			97
			RM87			125
2.7	538	16900	**R87**	**R57**	**DRN80MK4**	89
3	472	16900	**RF87**			96
			RM87			125
3.2	456	16900	**R87**	**R57**	**DRN80M4**	94
3.6	398	16900	**RF87**			100
4.1	352	16900	**RM87**			130
3.6	400	16900	**R87**	**R57**	**DRN80M4**	92
4	361	16900	**RF87**			100
			RM87			130
4.8	305	16900	**R87**	**R57**	**DRN90S4**	100
5.4	268	16900	**RF87**			105
6.2	236	16900	**RM87**			135
4.9	300	16900	**R87**	**R57**	**DRN90S4**	99
5.7	256	16900	**RF87**			105
6.3	232	16900	**RM87**			135
7	209	16900	**R87**	**R57**	**DRN90L4**	105
			RF87			110
			RM87			140
7.5	195	16900	**R87**	**R57**	**DRN90L4**	100
			RF87			110
			RM87			140

$M_{a\,max}$ = 3000 Nm

n_a min^{-1}	i	F_{Ra} N	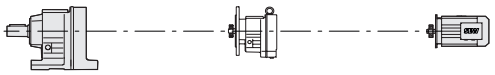			m kg
0.06	21769	13100				
0.07	19332	13100				
0.08	17230	13100				
0.09	14999	13100				
0.1	13320	13100				
0.12	11156	13100	**R97**			130
0.14	10030	13100	**RF97**	**R57**	**DRN63MS4**	145
0.16	8706	13100	**RM97**			195
0.18	7692	13100				
0.21	6708	13100				
0.23	5931	19800				
0.27	5161	19800				
0.3	4559	19800				
0.29	4678	19800	**R97** **RF97** **RM97**	**R57**	**DRN63MS4**	125 145 195
0.32	4309	19800	**R97**			125
0.37	3702	19800	**RF97**	**R57**	**DRN63M4**	145
0.46	3019	19800	**RM97**			195
0.34	4004	13100	**R97**			130
0.4	3481	13100	**RF97** **RM97**	**R57**	**DRN63M4**	145 200
0.45	3065	13100	**R97** **RF97** **RM97**	**R57**	**DRN63M4**	130 145 195
0.52	2722	13100	**R97**			130
0.61	2311	13100	**RF97**	**R57**	**DRN71MS4**	145
0.68	2078	13100	**RM97**			195
0.53	2668	19800	**R97**			125
0.63	2245	19800	**RF97** **RM97**	**R57**	**DRN71MS4**	145 195
0.7	2016	19800				
0.82	1733	19800	**R97**			130
0.87	1623	19800	**RF97**	**R57**	**DRN71M4**	145
0.99	1434	19800	**RM97**			195
0.78	1823	13100	**R97**			130
0.89	1583	13100	**RF97**	**R57**	**DRN71M4**	145
1	1396	13100	**RM97**			200
1.2	1207	19800	**R97**			130
1.3	1084	19800	**RF97**	**R57**	**DRN80MK4**	150
1.5	934	19800	**RM97**			200
1.2	1228	13100	**R97**			135
1.3	1069	19800	**RF97**	**R57**	**DRN80MK4**	150
1.5	938	19800	**RM97**			200
1.6	878	19800	**R97**			135
1.9	755	19800	**RF97** **RM97**	**R57**	**DRN80M4**	150 200
1.8	824	13100	**R97**			135
2	737	13100	**RF97** **RM97**	**R57**	**DRN80M4**	155 205
2.3	625	19800	**R97**			140
2.7	549	19800	**RF97**	**R57**	**DRN90S4**	155
3.1	466	19800	**RM97**			210

$M_{a\,max}$ = 3000 Nm

n_a min^{-1}	i	F_{Ra} N	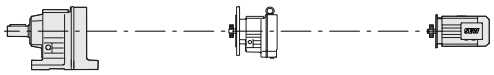			m kg
2.3	632	19800	**R97**			140
2.6	560	19800	**RF97**	**R57**	**DRN90S4**	160
3	484	13100	**RM97**			210
3.4	431	19800	**R97**			145
3.9	379	19800	**RF97**	**R57**	**DRN90L4**	165
4.3	336	19800	**RM97**			215
3.5	420	19800	**R97**			140
4	370	19800	**RF97**	**R57**	**DRN90L4**	160
4.2	349	19800	**RM97**			210
4.9	296	19800	**R97**			150
5.8	249	19800	**RF97**	**R57**	**DRN100LS4**	165
6.2	234	19800	**RM97**			220
4.9	297	19800	**R97**			145
5.4	270	19800	**RF97**	**R57**	**DRN100LS4**	165
6.4	227	19800	**RM97**			215
7	209	19800	**R97** **RF97** **RM97**	**R57**	**DRN100L4**	155 175 225

$M_{a\,max}$ = 4300 Nm

n_a min^{-1}	i	F_{Ra} N	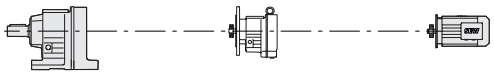			m kg
0.07	20018	29500				
0.08	17080	29500				
0.09	14936	29500				
0.11	12829	29500	**R107**			200
0.12	11256	29500	**RF107**	**R77**	**DRN63MS4**	210
0.14	9547	29500	**RM107**			295
0.16	8618	29500				
0.18	7583	29500				
0.2	6743	29500	**R107**			205
0.23	5914	29500	**RF107**	**R77**	**DRN63M4**	210
0.27	5168	29500	**RM107**			295
0.32	4435	29500				
0.36	3896	29500	**R107**			205
0.41	3432	29500	**RF107**	**R77**	**DRN71MS4**	210
0.46	3039	29500	**RM107**			300
0.36	3918	29500	**R107**			195
0.42	3343	29500	**RF107**	**R77**	**DRN71MS4**	205
0.46	3034	29500	**RM107**			290
0.53	2653	29500	**R107**			200
0.62	2280	29500	**RF107**	**R77**	**DRN71M4**	205
0.68	2067	29500	**RM107**			290
0.53	2688	29500	**R107** **RF107** **RM107**	**R77**	**DRN71M4**	205 210 300
0.71	1987	29500	**R107** **RF107** **RM107**	**R77**	**DRN71M4**	205 210 300
0.79	1827	29500	**R107**			205
0.9	1599	29500	**RF107**	**R77**	**DRN80MK4**	210
1	1400	29500	**RM107**			300
0.85	1693	29500	**R107**			200
0.93	1550	29500	**RF107**	**R77**	**DRN80MK4**	205
1	1407	29500	**RM107**			295

$M_{a\,max}$ = 4300 Nm

n_a min^{-1}	i	F_{Ra} N	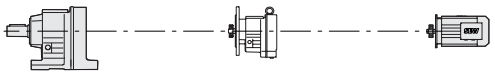			m kg
0.62	2339	29500	**R107** **RF107** **RM107**	**R77**	**DRN80M4**	210 215 305
1.2 **1.4**	1209 1055	29500 29500	**R107** **RF107** **RM107**	**R77**	**DRN80M4**	205 210 300
1.2 **1.3**	1226 1104	29500 29500	**R107** **RF107** **RM107**	**R77**	**DRN80M4**	210 215 305
1.6 **1.8** **2**	919 815 717	29500 29500 29500	**R107** **RF107** **RM107**	**R77**	**DRN90S4**	210 215 305
1.6 **1.8**	939 822	29500 29500	**R107** **RF107** **RM107**	**R77**	**DRN90S4**	215 220 310
2.3 **2.8**	626 528	29500 29500	**R107** **RF107** **RM107**	**R77**	**DRN90L4**	210 220 305
2.4 **2.7** **3**	614 544 492	29500 29500 29500	**R107** **RF107** **RM107**	**R77**	**DRN90L4**	220 225 310
3.1	469	29500	**R107** **RF107** **RM107**	**R77**	**DRN90L4**	210 215 305
3.4 **3.8** **4.5**	426 377 325	29500 29500 29500	**R107** **RF107** **RM107**	**R77**	**DRN100LS4**	215 220 310
3.5 **3.9** **4.5**	417 369 323	29500 29500 29500	**R107** **RF107** **RM107**	**R77**	**DRN100LS4**	220 230 315
5.1 **5.7**	284 256	29500 29500	**R107** **RF107** **RM107**	**R77**	**DRN100L4**	225 230 315
5.1 **5.8**	285 253	29500 29500	**R107** **RF107** **RM107**	**R77**	**DRN100L4**	230 235 325
6.7 **7.6**	220 193	29500 29500	**R107** **RF107** **RM107**	**R77**	**DRN112M4**	230 240 325
6.8 **7.8**	214 187	29500 29500	**R107** **RF107** **RM107**	**R77**	**DRN112M4**	240 245 330
8.5	172	29500	**R107** **RF107** **RM107**	**R77**	**DRN132S4**	245 250 335

$M_{a\,max}$ = 6000 Nm

n_a min^{-1}	i	F_{Ra} N	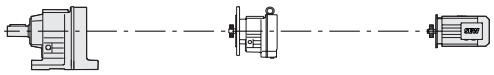			m kg
0.07	20936	43000				
0.08	17863	43000				
0.09	15620	43000	**R127**			260
0.1	13417	43000	**RF127**	**R77**	**DRN63MS4**	270
0.1	14123	43000	**RM127**			365
0.12	11772	43000				
0.14	9985	43000				
0.15	9013	43000				
0.16	8771	43000				
0.17	8282	43000				
0.18	7639	43000	**R127**			260
0.19	7053	43000	**RF127**	**R77**	**DRN63M4**	270
0.2	6722	43000	**RM127**			365
0.22	6185	43000				
0.22	6347	43000				
0.25	5592	43000	**R127**			260
0.3	4740	43000	**RF127**	**R77**	**DRN71MS4**	270
0.32	4441	43000	**RM127**			365
0.36	3949	43000				
0.38	3764	43000	**R127**			260
0.4	3571	43000	**RF127**	**R77**	**DRN71M4**	275
0.46	3110	43000	**RM127**			370
0.4	3495	43000	**R127**			245
0.46	3056	43000	**RF127**	**R77**	**DRN71M4**	265
0.49	2903	43000	**RM127**			360
0.51	2812	43000	**R127**			265
0.6	2383	43000	**RF127**	**R77**	**DRN80MK4**	275
0.74	1934	43000	**RM127**			370
0.56	2547	43000	**R127**			250
0.66	2161	43000	**RF127**	**R77**	**DRN80MK4**	270
0.74	1951	43000	**RM127**			365
0.57	2506	43000				
0.63	2266	43000	**R127**			265
0.71	2016	43000	**RF127**	**R77**	**DRN80MK4**	275
0.75	1920	43000	**RM127**			370
0.78	1835	43000	**R127**			265
0.93	1555	43000	**RF127**	**R77**	**DRN80M4**	280
1	1444	43000	**RM127**			375
0.79	1823	43000				
0.86	1673	43000	**R127**			265
0.93	1545	43000	**RF127**	**R77**	**DRN80M4**	275
0.95	1512	43000	**RM127**			375
0.84	1716	43000	**R127**			250
0.89	1620	43000	**RF127**	**R77**	**DRN80M4**	270
1	1380	43000	**RM127**			370
1.1	1282	43000				
1.1	1322	43000				
1.2	1195	43000				
1.3	1164	43000	**R127**			270
1.4	1013	43000	**RF127**	**R77**	**DRN90S4**	280
1.4	1034	43000	**RM127**			380
1.5	987	43000				
1.6	935	43000				
1.6	936	43000				

$M_{a\,max}$ = 6000 Nm

n_a min^{-1}	i	F_{Ra} N	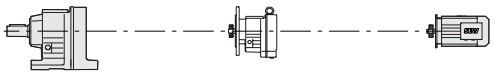			m kg
1.2	1210	43000	**R127**			255
1.5	961	43000	**RF127**	**R77**	**DRN90S4**	275
			RM127			375
			R127			270
1.2	1224	43000	**RF127**	**R77**	**DRN90S4**	285
			RM127			380
1.8	792	43000				
1.8	794	43000	**R127**			275
1.8	830	43000	**RF127**	**R77**	**DRN90L4**	285
1.9	777	43000	**RM127**			380
2	750	43000				
			R127			260
1.9	773	43000	**RF127**	**R77**	**DRN90L4**	280
			RM127			375
2.2	659	43000				
2.3	636	43000				
2.3	642	43000	**R127**			280
2.4	614	43000	**RF127**	**R77**	**DRN100LS4**	290
2.5	581	43000	**RM127**			385
2.8	521	43000				
2.9	492	43000				
3	480	43000				
			R127			265
2.4	608	43000	**RF127**	**R77**	**DRN100LS4**	285
			RM127			380
			R127			260
3	490	43000	**RF127**	**R77**	**DRN100LS4**	285
			RM127			380
			R127			285
3.6	407	43000	**RF127**	**R77**	**DRN100L4**	295
3.8	386	43000	**RM127**			395
			R127			270
3.7	394	43000	**RF127**	**R77**	**DRN100L4**	290
4.5	327	43000	**RM127**			385
			R127			295
4.9	298	43000	**RF127**	**R77**	**DRN112M4**	305
5.8	253	43000	**RM127**			400
			R127			280
5.7	259	43000	**RF127**	**R77**	**DRN112M4**	300
			RM127			395
			R127			290
7.2	202	43000	**RF127**	**R77**	**DRN132S4**	310
			RM127			405
			R127			310
9	162	43000	**RF127**	**R77**	**DRN132M4**	330
			RM127			425
			R127			315
12	126	43000	**RF127**	**R77**	**DRN132L4**	335
			RM127			435

$M_{a\,max}$ = 8000 Nm

n_a min^{-1}	i	F_{Ra} N	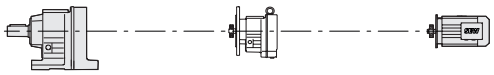			m kg
0.06	22203	53400				
0.07	18945	53400	**R137**			290
0.08	16566	53400	**RF137**	**R77**	**DRN63MS4**	310
0.09	14777	53400	**RM137**			425
0.11	12921	53400				
0.12	11712	53400	**R137**			290
0.13	10573	53400	**RF137**	**R77**	**DRN63M4**	315
0.16	8784	53400	**RM137**			425
0.19	7479	53400	**R137**			290
0.21	6559	53400	**RF137**	**R77**	**DRN71MS4**	315
			RM137			425
0.24	5834	53400				
0.28	5116	53400	**R137**			290
0.32	4464	53400	**RF137**	**R77**	**DRN71M4**	315
0.36	3928	53400	**RM137**			425
0.3	4709	53400	**R137**			280
0.35	4018	53400	**RF137**	**R77**	**DRN71M4**	305
			RM137			415
0.41	3514	53400				
0.43	3338	53400	**R137**			285
0.49	2929	53400	**RF137**	**R77**	**DRN80MK4**	305
0.58	2484	53400	**RM137**			420
0.42	3454	53400	**R137**			295
0.48	2993	53400	**RF137**	**R77**	**DRN80MK4**	315
			RM137			430
			R137			295
0.54	2658	53400	**RF137**	**R77**	**DRN80MK4**	315
			RM137			425
0.6	2412	53400	**R137**			295
0.69	2073	53400	**RF137**	**R77**	**DRN80M4**	320
0.78	1839	53400	**RM137**			430
0.64	2242	53400	**R137**			285
0.77	1863	53400	**RF137**	**R77**	**DRN80M4**	310
			RM137			420
0.91	1598	53400	**R137**			300
1	1397	53400	**RF137**	**R77**	**DRN90S4**	325
1.2	1226	53400	**RM137**			435
0.92	1586	53400	**R137**			290
1.1	1391	53400	**RF137**	**R77**	**DRN90S4**	315
1.2	1256	53400	**RM137**			425
1.3	1090	53400	**R137**			305
1.5	951	53400	**RF137**	**R77**	**DRN90L4**	325
			RM137			440
1.3	1105	53400	**R137**			295
1.4	1043	53400	**RF137**	**R77**	**DRN90L4**	320
			RM137			430
1.6	888	53400	**R137**			300
2.1	699	53400	**RF137**	**R77**	**DRN100LS4**	325
2.4	609	53400	**RM137**			435
1.7	831	53400	**R137**			310
2	730	53400	**RF137**	**R77**	**DRN100LS4**	330
2.3	629	53400	**RM137**			445
2.6	560	53400	**R137**			315
3	490	53400	**RF137**	**R77**	**DRN100L4**	340
			RM137			450

$M_{a\,max}$ = 8000 Nm

n_a min^{-1}	i	F_{Ra} N	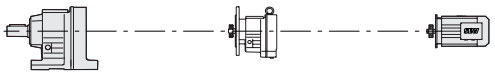			m kg
2.6	564	53400	**R137**			305
2.8	517	53400	**RF137**	**R77**	**DRN100L4**	330
3.2	453	53400	**RM137**			440
			R137			325
3.4	428	53400	**RF137**	**R77**	**DRN112M4**	350
3.8	381	53400	**RM137**			460
			R137			315
3.9	376	53400	**RF137**	**R77**	**DRN112M4**	340
4.3	339	53400	**RM137**			450
4.5	323	53400	**R137**			335
5	291	53400	**RF137**	**R77**	**DRN132S4**	360
5.7	255	53400	**RM137**			470
			R137			325
4.9	297	53400	**RF137**	**R77**	**DRN132S4**	350
			RM137			460
			R137			355
6.6	223	53400	**RF137**	**R77**	**DRN132M4**	375
7.4	197	53400	**RM137**			490
			R137			360
8.4	175	53400	**RF137**	**R77**	**DRN132L4**	385
			RM137			495

$M_{a\,max}$ = 13000 Nm

n_a min^{-1}	i	F_{Ra} N	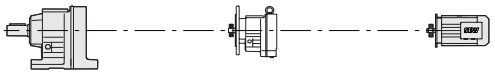			m kg
			R147			420
0.06	21342	62700	**RF147**	**R77**	**DRN63MS4**	430
0.06	23401	62700	**RM147**			600
0.08	18210	62700	**R147**			420
0.09	15923	62700	**RF147**	**R77**	**DRN63M4**	430
0.1	14075	62700	**RM147**			600
0.11	12344	62700	**R147**			420
0.13	11143	62700	**RF147**	**R77**	**DRN71MS4**	430
0.14	9743	62700	**RM147**			600
0.17	8443	62700	**R147**			425
0.19	7307	62700	**RF147**	**R77**	**DRN71M4**	430
0.22	6447	62700	**RM147**			600
0.26	5568	62700	**R147**			425
0.29	4926	62700	**RF147**	**R77**	**DRN80MK4**	435
0.33	4325	62700	**RM147**			600
			R147			430
0.38	3754	62700	**RF147**	**R77**	**DRN80M4**	435
0.44	3302	62700	**RM147**			600
			R147			435
0.5	2898	62700	**RF147**	**R77**	**DRN90S4**	440
			RM147			610
			R147			435
0.57	2555	62700	**RF147**	**R77**	**DRN90S4**	440
0.66	2211	62700	**RM147**			610
0.75	1951	62700	**R147**			435
0.86	1705	62700	**RF147**	**R77**	**DRN90L4**	445
0.95	1536	62700	**RM147**			610
1.1	1329	62700	**R147**			440
1.2	1166	62700	**RF147**	**R77**	**DRN100LS4**	450
1.4	1029	62700	**RM147**			620

$M_{a\,max}$ = 13000 Nm

n_a min^{-1}	i	F_{Ra} N	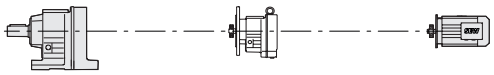			m kg
1.6	889	62700	**R147**	**R77**	**DRN100L4**	445
1.9	784	62700	**RF147**			455
			RM147			620
2.1	695	62700	**R147**	**R77**	**DRN112M4**	455
2.4	619	62700	**RF147**			465
2.6	558	62700	**RM147**			630
2.7	533	62700				
3	489	62700	**R147**			490
3.2	462	62700	**RF147**	**R87**	**DRN132S4**	495
3.4	426	62700	**RM147**			660
3.5	415	62700				
4	368	62700	**R147**	**R87**	**DRN132M4**	510
4.5	326	62700	**RF147**			510
			RM147			680
5.3	280	62700	**R147**	**R87**	**DRN132L4**	510
6	247	62700	**RF147**			520
			RM147			690
6.9	214	62700	**R147**	**R87**	**DRN160M4**	550
			RF147			560
			RM147			720
7.8	189	62700	**R147**	**R87**	**DRN160L4**	560
9.3	159	62700	**RF147**			570
			RM147			740

$M_{a\,max}$ = 20000 Nm

n_a min^{-1}	i	F_{Ra} N	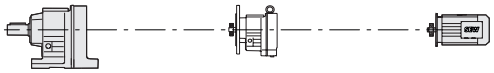			m kg
0.05	27001	120000	**R167**	**R97**	**DRN71MS4**	750
0.06	22482	120000	**RF167**			760
0.07	20002	120000	**RM167**			950
0.08	17361	120000				
0.09	15446	120000	**R167**	**R97**	**DRN71M4**	750
0.1	14051	120000	**RF167**			760
0.12	11812	120000	**RM167**			960
0.13	10509	120000				
0.15	9631	120000	**R167**	**R97**	**DRN80MK4**	760
			RF167			760
			RM167			960
0.19	7749	120000	**R167**	**R97**	**DRN80M4**	760
0.21	6894	120000	**RF167**			770
0.24	6077	120000	**RM167**			960
0.27	5407	120000				
0.31	4650	120000	**R167**	**R97**	**DRN90S4**	760
0.35	4129	120000	**RF167**			770
0.39	3692	120000	**RM167**			970
0.55	2657	120000	**R167**	**R97**	**DRN90L4**	760
0.63	2333	120000	**RF167**			770
			RM167			970

$M_{a\,max}$ = 20000 Nm

n_a min^{-1}	i	F_{Ra} N	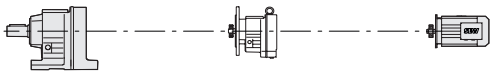			m kg
0.4	3637	120000				
0.44	3330	120000				
0.53	2757	120000	**R167**			820
0.6	2436	120000	**RF167**	**R107**	**DRN100LS4**	820
0.63	2298	120000	**RM167**			1020
0.7	2066	120000				
0.78	1849	120000				
0.87	1674	120000				
0.47	3099	120000	**R167** **RF167** **RM167**	**R97**	**DRN100LS4**	770 780 970
0.7	2085	120000	**R167**			770
0.77	1877	120000	**RF167**	**R97**	**DRN100LS4**	780
0.87	1670	120000	**RM167**			970
0.98	1485	120000	**R167**			820
1.1	1342	120000	**RF167**	**R107**	**DRN100L4**	830
1.2	1229	120000	**RM167**			1030
1	1438	120000	**R167**			780
1.1	1279	120000	**RF167**	**R97**	**DRN100L4**	780
1.3	1123	120000	**RM167**			980
1.3	1111	120000	**R167**			830
1.5	950	120000	**RF167**	**R107**	**DRN112M4**	840
1.7	860	120000	**RM167**			1030
1.5	999	120000	**R167**			780
1.7	861	120000	**RF167**	**R97**	**DRN112M4**	790
			RM167			990
1.9	760	120000	**R167**			800
2.2	656	120000	**RF167**	**R97**	**DRN132S4**	800
			RM167			1000
1.9	763	120000	**R167**			840
2.1	690	120000	**RF167**	**R107**	**DRN132S4**	850
			RM167			1040
2.5	579	120000	**R167**			810
2.9	503	120000	**RF167**	**R97**	**DRN132M4**	820
			RM167			1020
2.5	585	120000	**R167**			860
2.9	511	120000	**RF167**	**R107**	**DRN132M4**	870
			RM167			1060
3.3	446	120000	**R167** **RF167** **RM167**	**R107**	**DRN132M4**	850 860 1060
3.4	432	120000	**R167**			820
3.9	376	120000	**RF167**	**R97**	**DRN132L4**	830
			RM167			1020
3.7	399	120000	**R167**			860
4.1	361	120000	**RF167**	**R107**	**DRN132L4**	870
			RM167			1070
4.2	349	120000	**R167**			900
4.4	335	120000	**RF167**	**R107**	**DRN160M4**	910
4.9	303	120000	**RM167**			1100
4.5	328	120000	**R167** **RF167** **RM167**	**R107**	**DRN160M4**	900 900 1100

$M_{a\,max}$ = 20000 Nm

n_a min^{-1}	i	F_{Ra} N	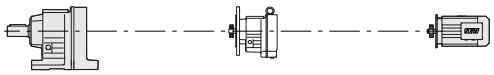			m kg
5	295	120000	**R167**	**R107**	**DRN160L4**	920
5.3	279	120000	**RF167**			920
5.5	270	120000	**RM167**			1120
6.4	229	120000				
5.1	291	120000	**R167**	**R107**	**DRN160L4**	910
5.6	264	120000	**RF167**			920
6.5	227	120000	**RM167**			1110
7.4	200	120000	**R167**	**R107**	**DRN180M4**	940
			RF167			950
			RM167			1140
7.5	198	120000	**R167**	**R107**	**DRN180M4**	930
			RF167			940
			RM167			1130
8.7	169	120000	**R167**	**R107**	**DRN180L4**	950
			RF167			960
			RM167			1160
8.8	168	120000	**R167**	**R107**	**DRN180L4**	950
			RF167			960
			RM167			1150

4.2.4 Dimension sheets R..DRN..

01 004 00 14

RX57..

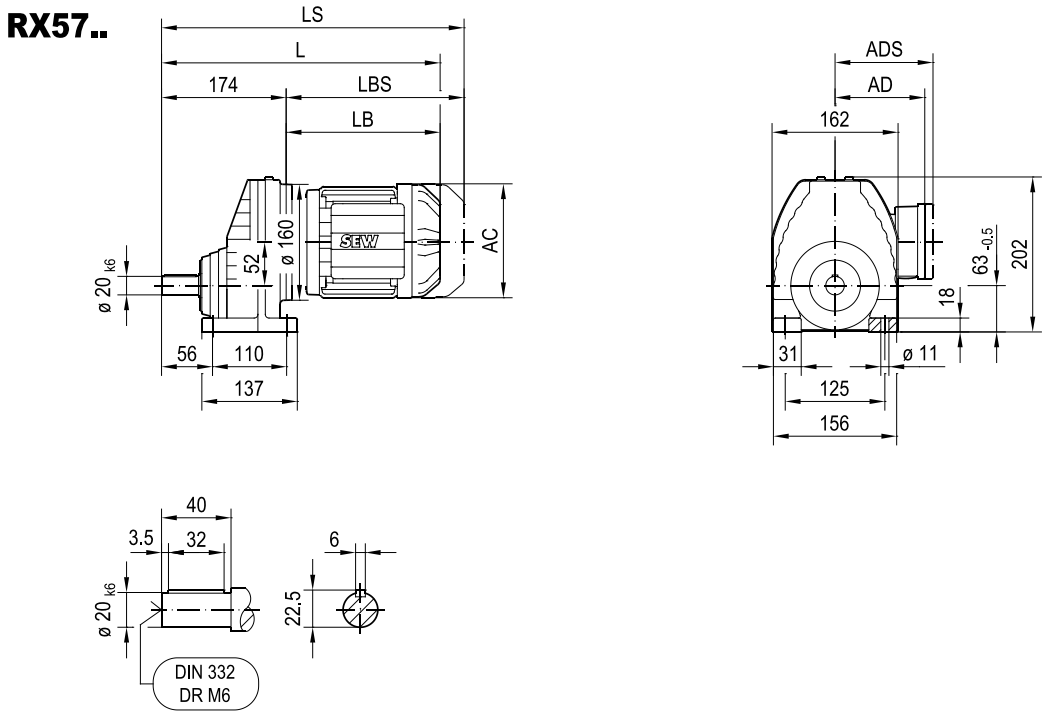

(→ 📖 4.1)	DRN													
	63MS	63M	71MS	71M	80MK	80MS	80M	90S	90L	100LS	100L/LM	112M	132S	132M
AC	115	115	139	139	156	156	156	179	179	197	197	221	221	261
AD	98	98	118	118	128	128	128	140	140	157	157	170	170	228
ADS	98	98	129	129	139	139	139	150	150	158	158	172	172	228
L	358	372	373	393	404	421	450	452	484	479	529	560	614	632
LS	414	428	441	461	485	502	531	545	577	573	623	672	726	770
LB	184	198	199	219	230	247	276	278	310	305	355	386	440	458
LBS	240	254	267	287	311	328	357	371	403	399	449	498	552	596

01 005 01 14

RXF57..

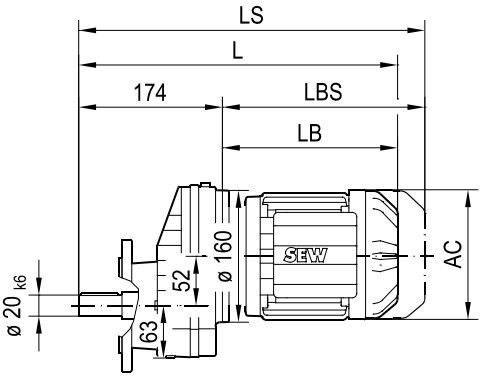

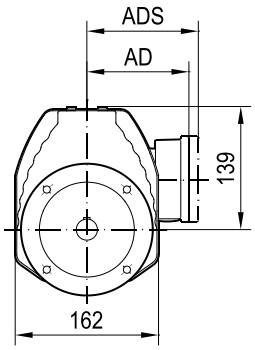

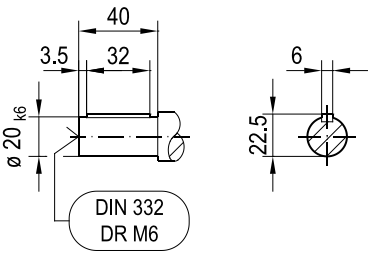

ø 140

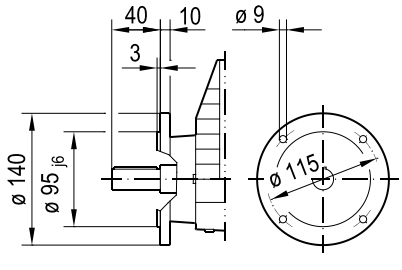

ø 160

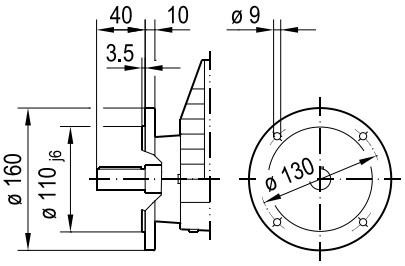

ø 200

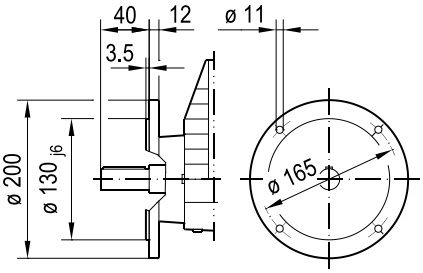

(→ 📖 4.1)	DRN													
	63MS	63M	71MS	71M	80MK	80MS	80M	90S	90L	100LS	100L/LM	112M	132S	132M
AC	115	115	139	139	156	156	156	179	179	197	197	221	221	261
AD	98	98	118	118	128	128	128	140	140	157	157	170	170	228
ADS	98	98	129	129	139	139	139	150	150	158	158	172	172	228
L	358	372	373	393	404	421	450	452	484	479	529	560	614	632
LS	414	428	441	461	485	502	531	545	577	573	623	672	726	770
LB	184	198	199	219	230	247	276	278	310	305	355	386	440	458
LBS	240	254	267	287	311	328	357	371	403	399	449	498	552	596

01 006 01 14

RX67..

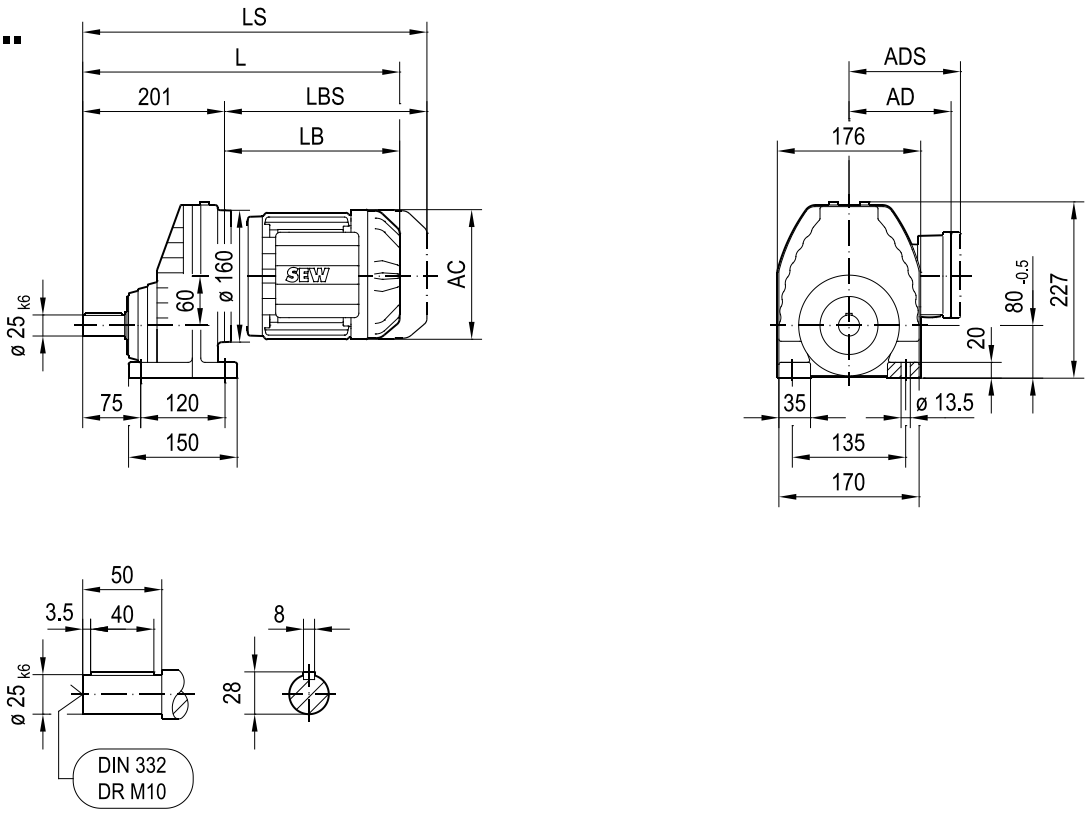

(→ 📖 4.1)	DRN													
	63MS	63M	71MS	71M	80MK	80MS	80M	90S	90L	100LS	100L/LM	112M	132S	132M
AC	115	115	139	139	156	156	156	179	179	197	197	221	221	261
AD	98	98	118	118	128	128	128	140	140	157	157	170	170	228
ADS	98	98	129	129	139	139	139	150	150	158	158	172	172	228
L	385	399	400	420	431	448	477	479	511	506	556	587	641	659
LS	441	455	468	488	512	529	558	572	604	600	650	699	753	797
LB	184	198	199	219	230	247	276	278	310	305	355	386	440	458
LBS	240	254	267	287	311	328	357	371	403	399	449	498	552	596

01 007 00 14

RXF67..

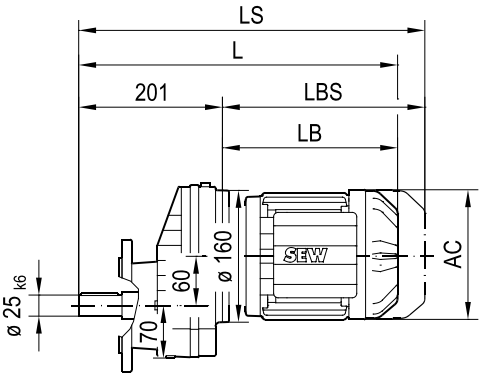

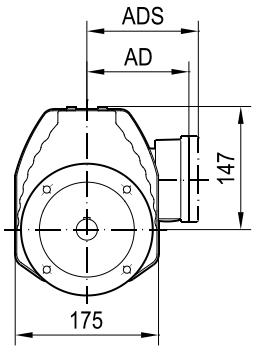

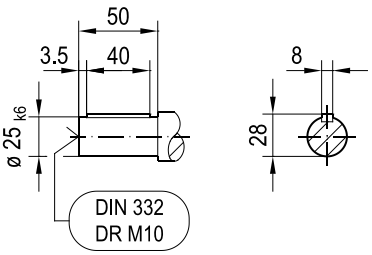

ø 160

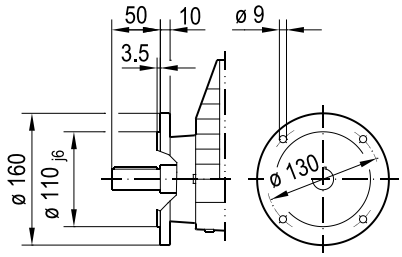

ø 200

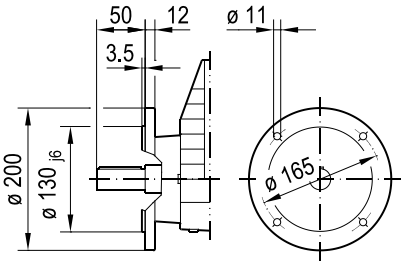

ø 250

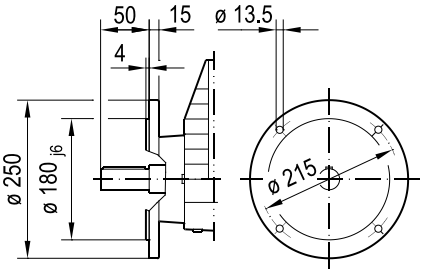

(→ 📖 4.1)	DRN													
	63MS	63M	71MS	71M	80MK	80MS	80M	90S	90L	100LS	100L/LM	112M	132S	132M
AC	115	115	139	139	156	156	156	179	179	197	197	221	221	261
AD	98	98	118	118	128	128	128	140	140	157	157	170	170	228
ADS	98	98	129	129	139	139	139	150	150	158	158	172	172	228
L	385	399	400	420	431	448	477	479	511	506	556	587	641	659
LS	441	455	468	488	512	529	558	572	604	600	650	699	753	797
LB	184	198	199	219	230	247	276	278	310	305	355	386	440	458
LBS	240	254	267	287	311	328	357	371	403	399	449	498	552	596

01 008 00 14

RX77..

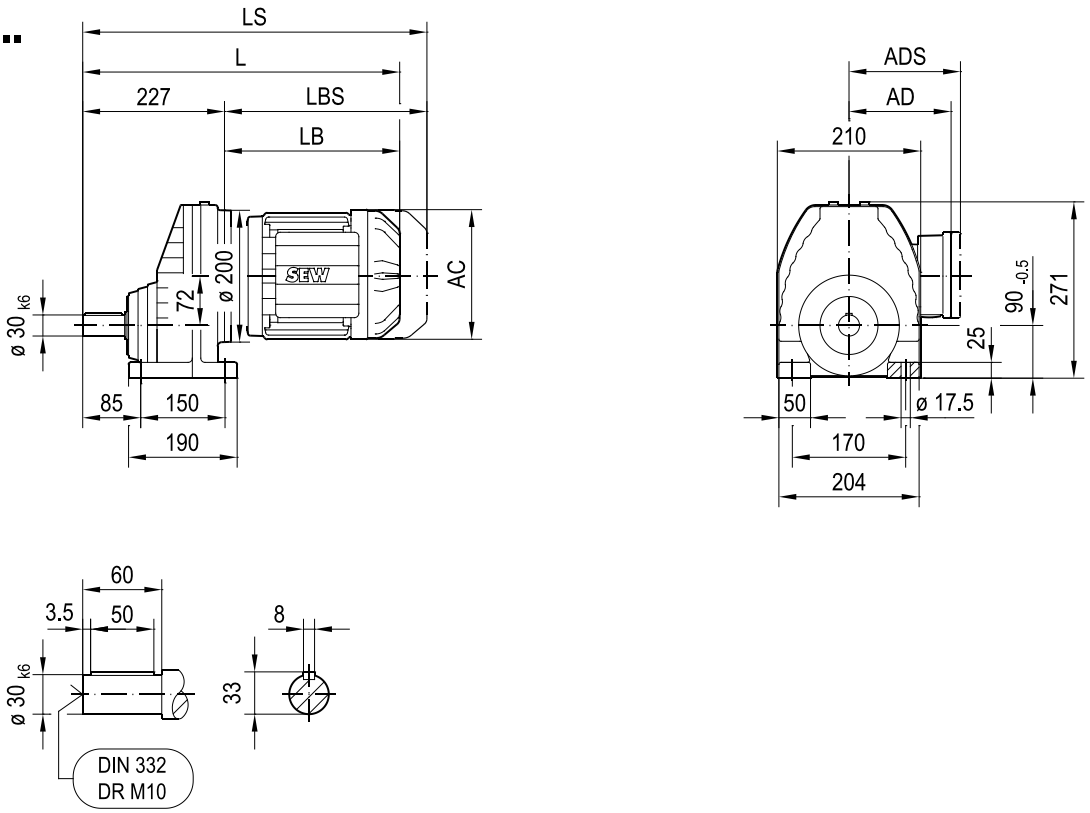

(→ 📖 4.1)	DRN													
	71MS	71M	80MK	80MS	80M	90S	90L	100LS	100L/LM	112M	132S	132M	132L	160..
AC	139	139	156	156	156	179	179	197	197	221	221	261	261	314
AD	118	118	128	128	128	140	140	157	157	170	170	228	228	253
ADS	129	129	139	139	139	150	150	158	158	172	172	228	228	253
L	419	439	450	467	496	498	530	525	575	606	656	674	700	766
LS	487	507	531	548	577	591	623	619	669	718	768	812	837	955
LB	192	212	223	240	269	271	303	298	348	379	429	447	473	539
LBS	260	280	304	321	350	364	396	392	442	491	541	585	610	728

01 009 01 14

RXF77..

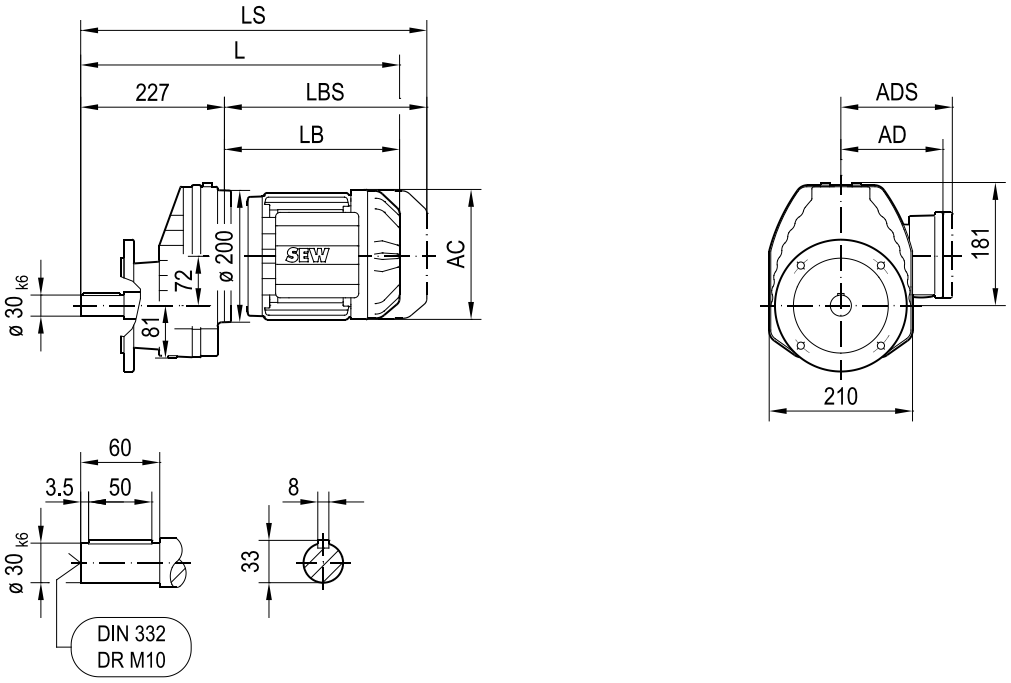

ø 200

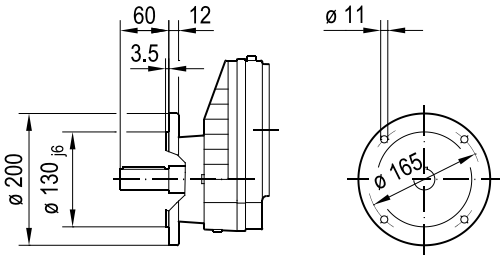

ø 250

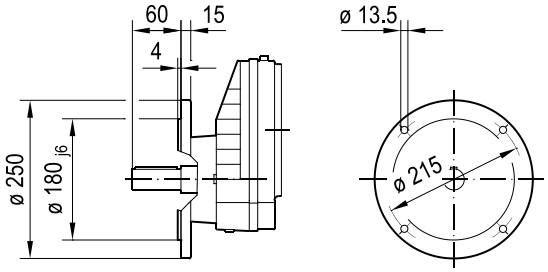

(→ 📖 4.1)	DRN													
	71MS	71M	80MK	80MS	80M	90S	90L	100LS	100L/LM	112M	132S	132M	132L	160..
AC	139	139	156	156	156	179	179	197	197	221	221	261	261	314
AD	118	118	128	128	128	140	140	157	157	170	170	228	228	253
ADS	129	129	139	139	139	150	150	158	158	172	172	228	228	253
L	419	439	450	467	496	498	530	525	575	606	656	674	700	766
LS	487	507	531	548	577	591	623	619	669	718	768	812	837	955
LB	192	212	223	240	269	271	303	298	348	379	429	447	473	539
LBS	260	280	304	321	350	364	396	392	442	491	541	585	610	728

01 010 00 14

RX87..

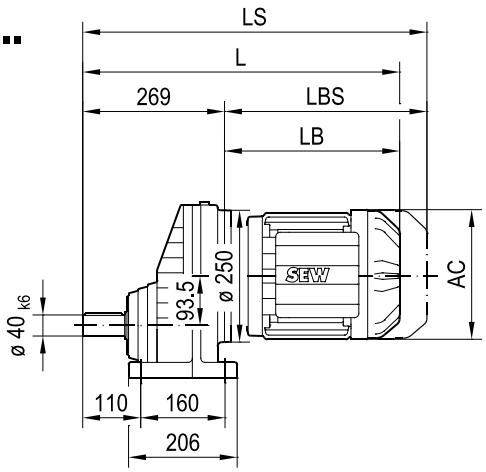

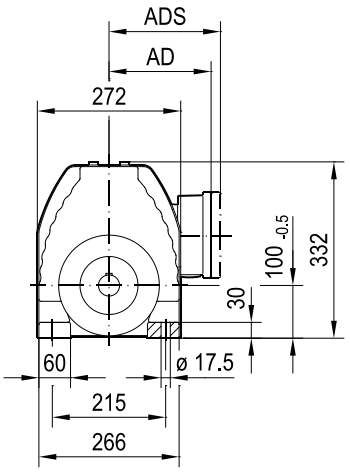

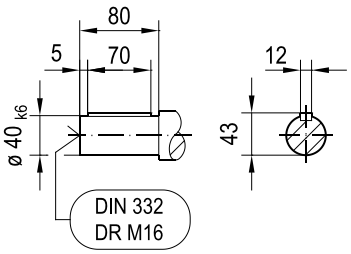

(→ 📖 4.1)	DRN											
	80M	90S	90L	100LS	100L/LM	112M	132S	132M	132L	160..	180..	200L
AC	156	179	179	197	197	221	221	261	261	314	357	394
AD	128	140	140	157	157	170	170	228	228	253	268	283
ADS	139	150	150	158	158	172	172	228	228	253	268	283
L	533	535	567	562	612	643	693	711	737	803	826	936
LS	614	628	660	656	706	755	805	849	874	992	1015	1141
LB	264	266	298	293	343	374	424	442	468	534	557	667
LBS	345	359	391	387	437	486	536	580	605	723	746	872

01 011 01 14

RXF87..

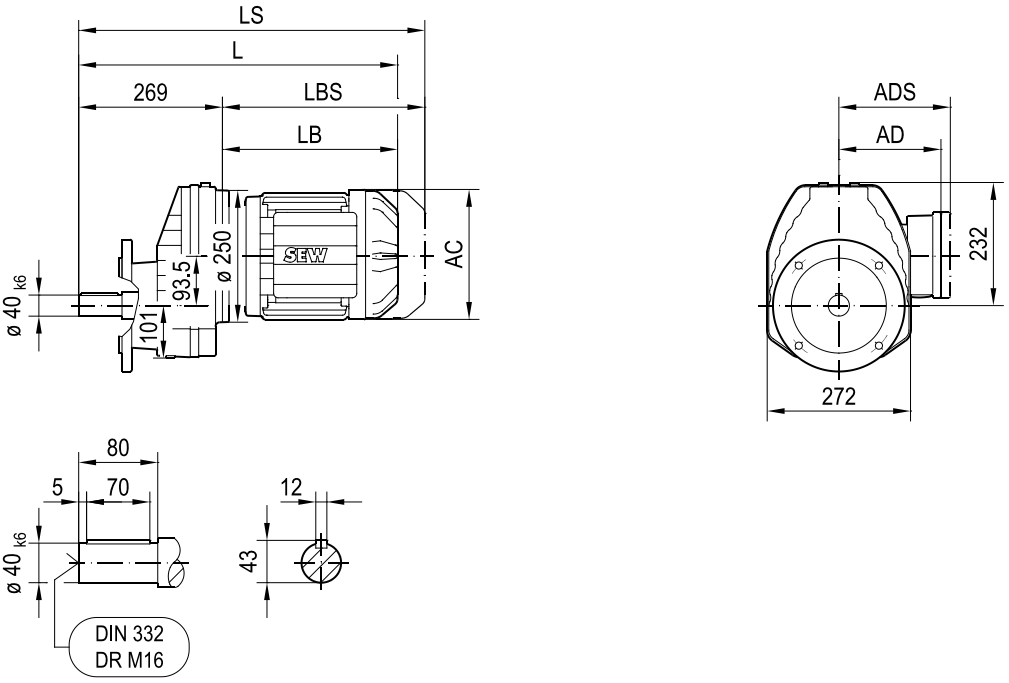

ø 250

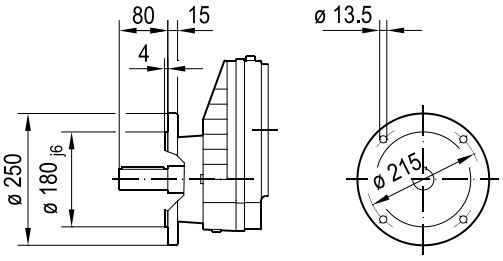

ø 300

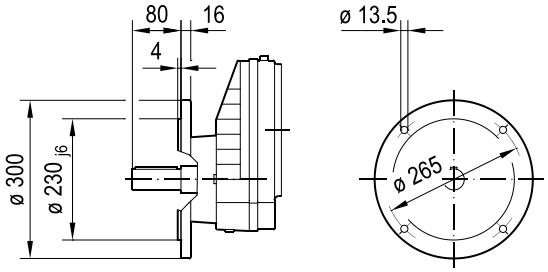

(→ 📖 4.1)	DRN											
	80M	90S	90L	100LS	100L/LM	112M	132S	132M	132L	160..	180..	200L
AC	156	179	179	197	197	221	221	261	261	314	357	394
AD	128	140	140	157	157	170	170	228	228	253	268	283
ADS	139	150	150	158	158	172	172	228	228	253	268	283
L	533	535	567	562	612	643	693	711	737	803	826	936
LS	614	628	660	656	706	755	805	849	874	992	1015	1141
LB	264	266	298	293	343	374	424	442	468	534	557	667
LBS	345	359	391	387	437	486	536	580	605	723	746	872

01 012 00 14

RX97..

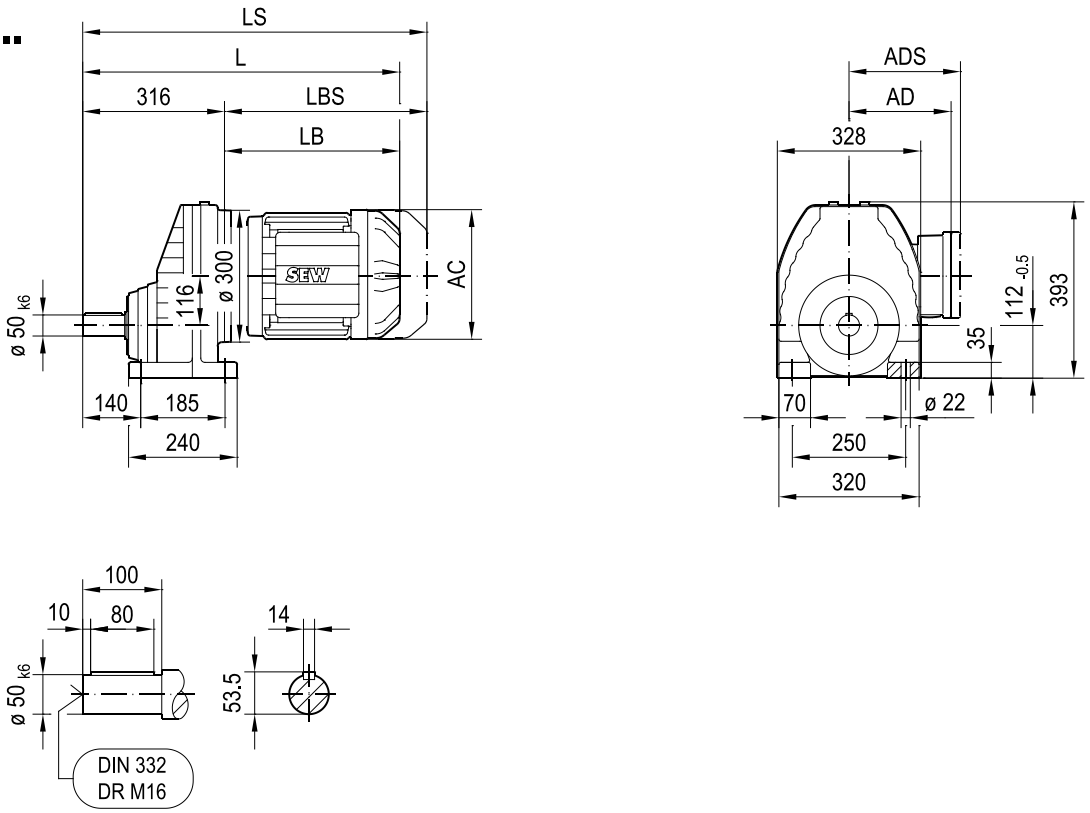

(→ 📖 4.1)	DRN											
	90S	90L	100LS	100L/LM	112M	132S	132M	132L	160..	180..	200L	225..
AC	179	179	197	197	221	221	261	261	314	357	394	434
AD	140	140	157	157	170	170	228	228	253	268	283	305
ADS	150	150	158	158	172	172	228	228	253	268	283	305
L	577	609	604	654	685	735	753	779	845	868	978	952
LS	670	702	698	748	797	847	891	916	1034	1057	1183	1157
LB	261	293	288	338	369	419	437	463	529	552	662	636
LBS	354	386	382	432	481	531	575	600	718	741	867	841

01 013 01 14

RXF97..

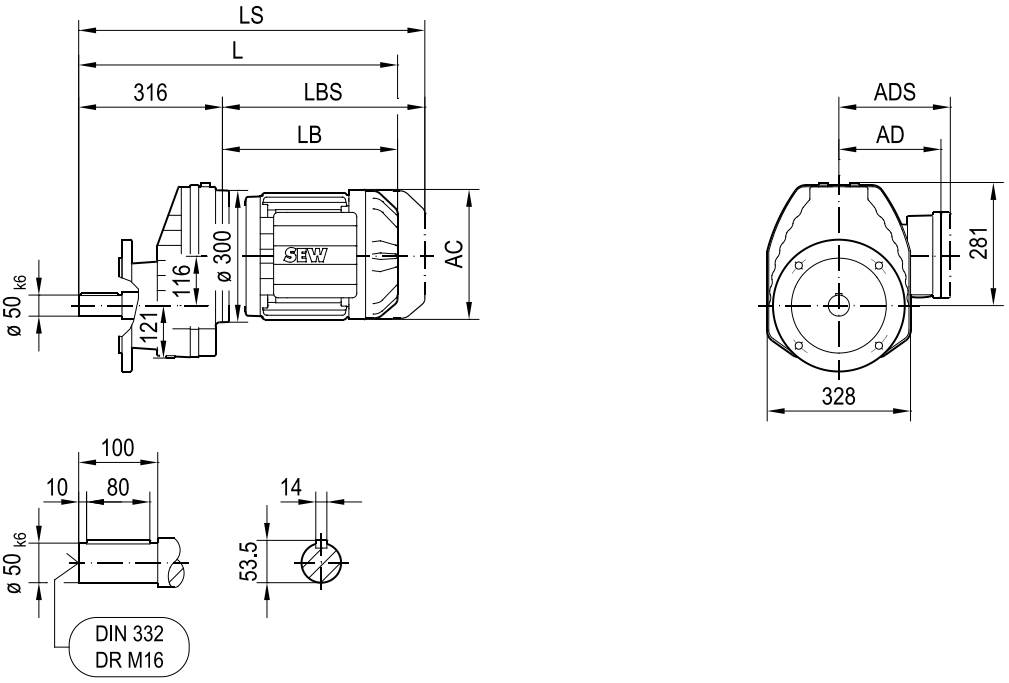

ø 300

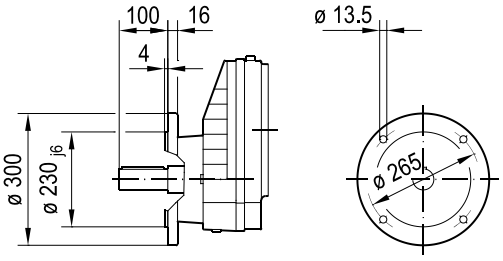

ø 350

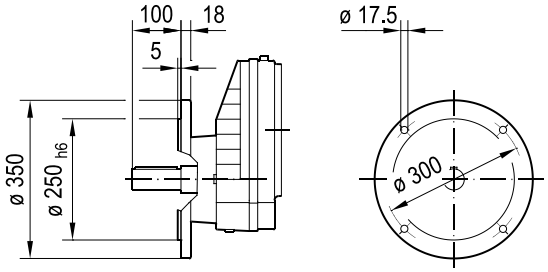

(→ 📖 4.1)	DRN											
	90S	90L	100LS	100L/LM	112M	132S	132M	132L	160..	180..	200L	225..
AC	179	179	197	197	221	221	261	261	314	357	394	434
AD	140	140	157	157	170	170	228	228	253	268	283	305
ADS	150	150	158	158	172	172	228	228	253	268	283	305
L	577	609	604	654	685	735	753	779	845	868	978	952
LS	670	702	698	748	797	847	891	916	1034	1057	1183	1157
LB	261	293	288	338	369	419	437	463	529	552	662	636
LBS	354	386	382	432	481	531	575	600	718	741	867	841

01 014 00 14

RX107..

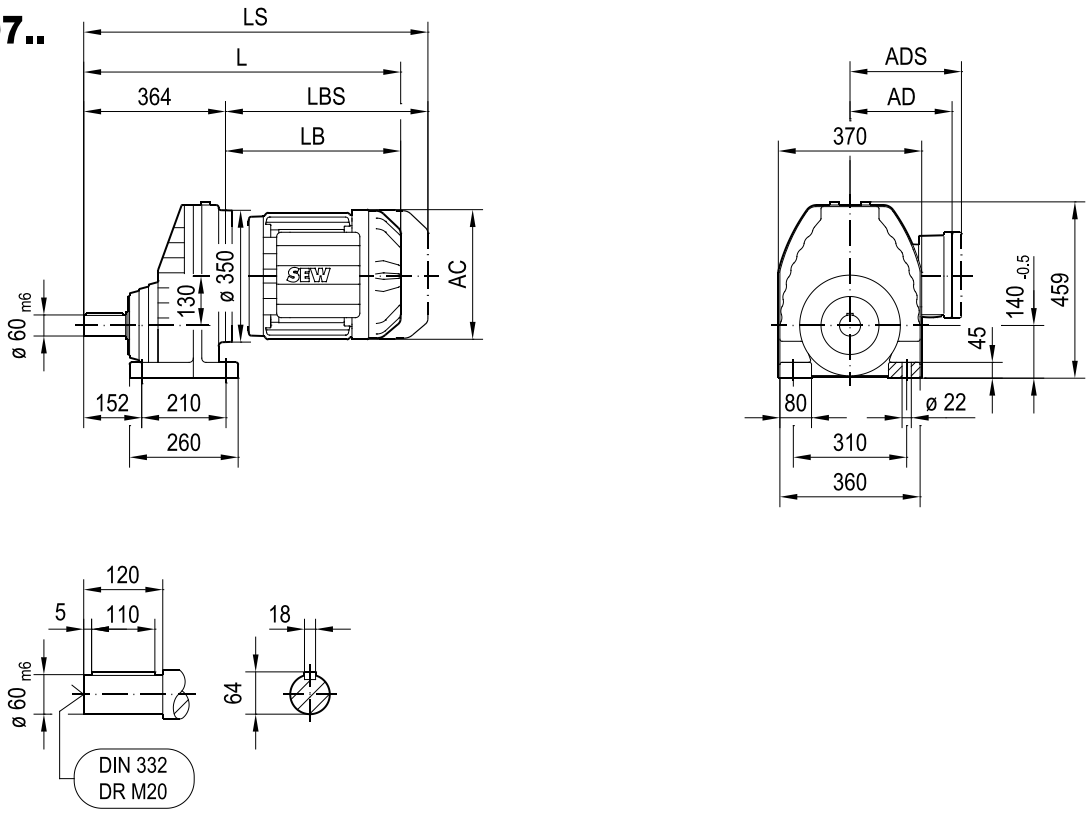

(→ 📖 4.1)	DRN									
	100L/LM	112M	132S	132M	132L	160..	180..	200L	225..	250M
AC	197	221	221	261	261	314	357	394	434	495
AD	157	170	170	228	228	253	268	283	305	394
ADS	158	172	172	228	228	253	268	283	305	394
L	696	727	777	795	821	887	910	1020	994	1131
LS	790	839	889	933	958	1076	1099	1225	1199	1371
LB	332	363	413	431	457	523	546	656	630	767
LBS	426	475	525	569	594	712	735	861	835	1007

01 015 01 14

RXF107..

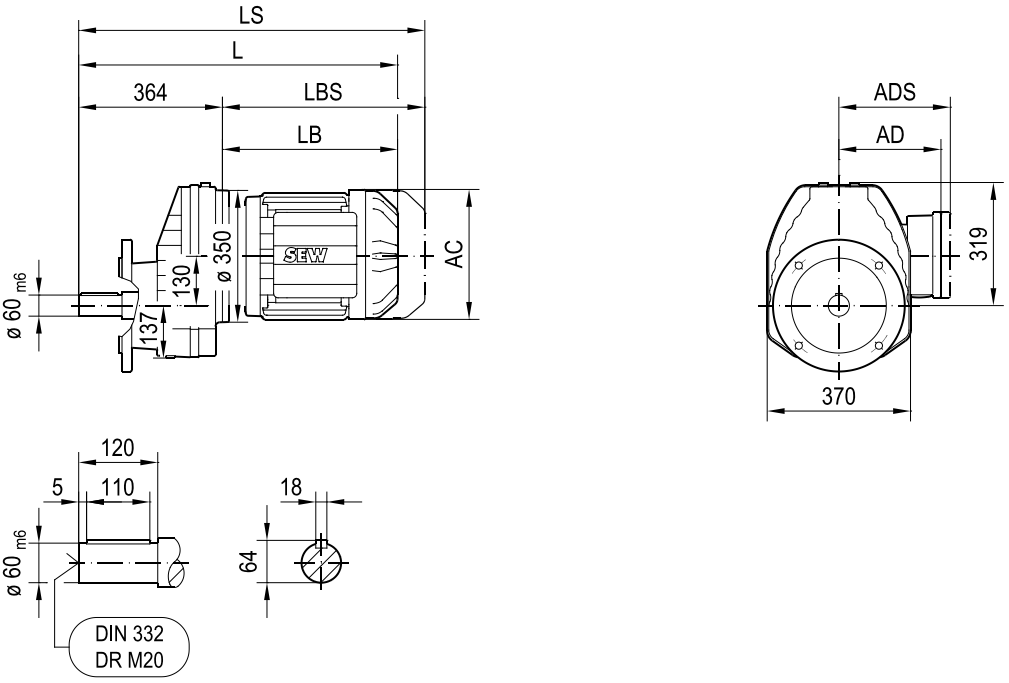

ø 350

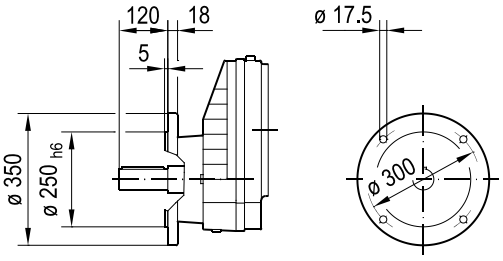

ø 450

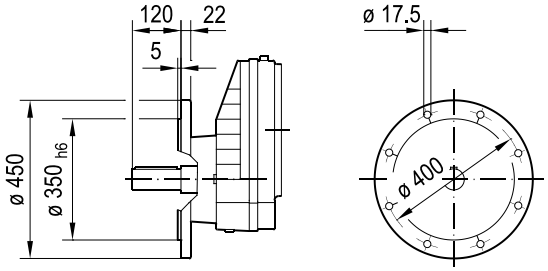

(→ 📖 4.1)	DRN									
	100L/LM	112M	132S	132M	132L	160..	180..	200L	225..	250M
AC	197	221	221	261	261	314	357	394	434	495
AD	157	170	170	228	228	253	268	283	305	394
ADS	158	172	172	228	228	253	268	283	305	394
L	696	727	777	795	821	887	910	1020	994	1131
LS	790	839	889	933	958	1076	1099	1225	1199	1371
LB	332	363	413	431	457	523	546	656	630	767
LBS	426	475	525	569	594	712	735	861	835	1007

01 561 00 17

R07..

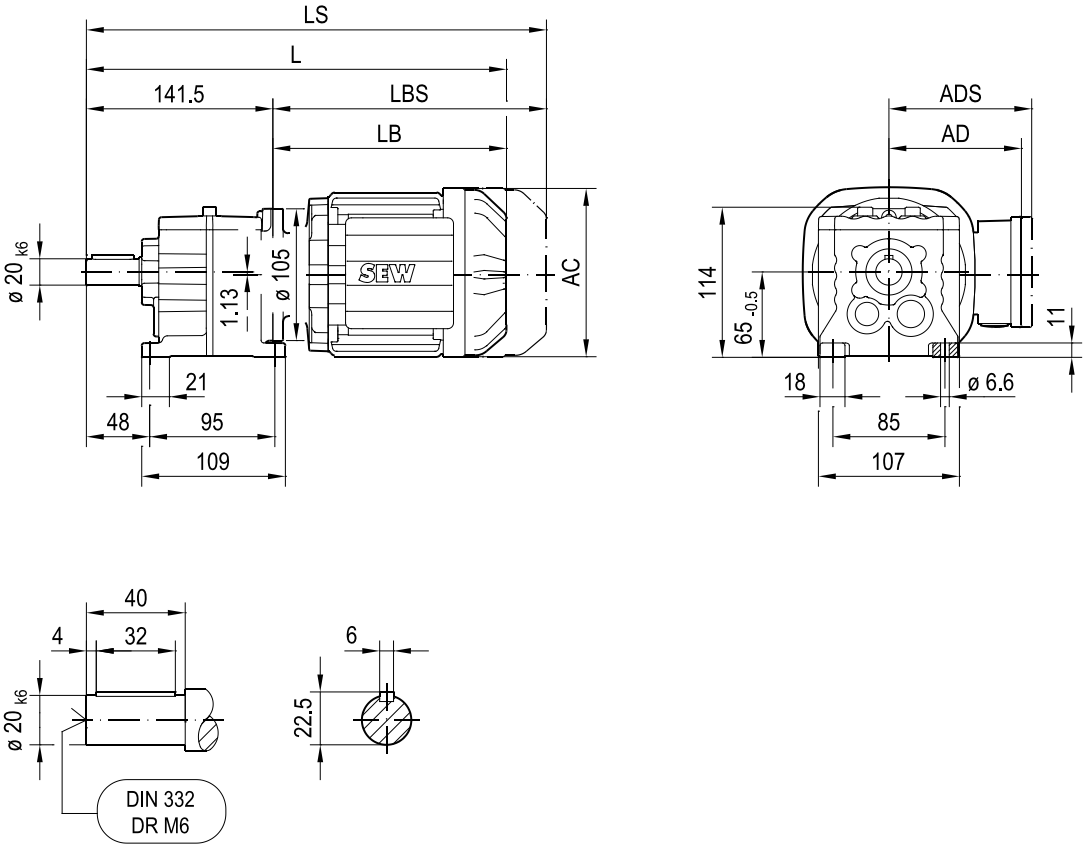

R07F..



(→ 📖 4.1)	DR2S	DRN						
	56..	63MS	63M	71MS	71M	80MK	80MS	80M
AC	109	115	115	139	139	156	156	156
AD	87	98	98	118	118	128	128	128
ADS	87	98	98	129	129	139	139	139
L	302	332	346	347	367	378	391	425
LS	338	388	402	415	435	459	472	506
LB	160	190	204	206	226	237	249	283
LBS	196	246	260	273	293	318	330	364

01 562 00 17

RF07..

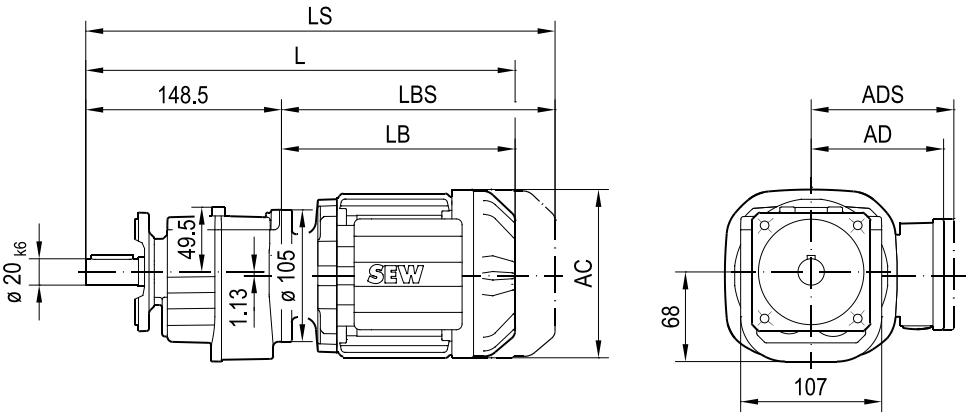

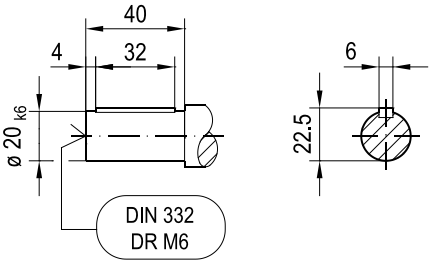

ø 120

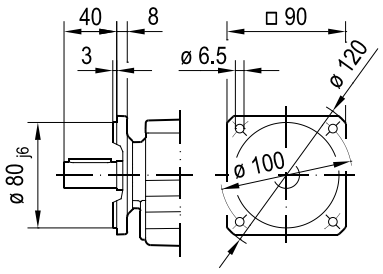

ø 140

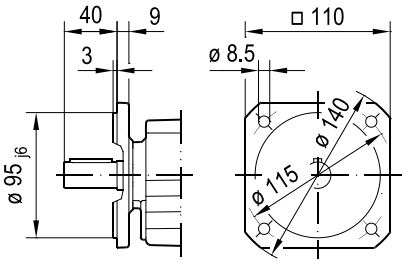

ø 160

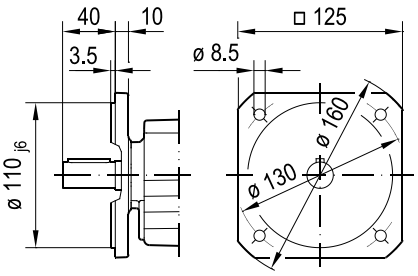

(→ 📖 4.1)	DR2S	DRN						
	56..	63MS	63M	71MS	71M	80MK	80MS	80M
AC	109	115	115	139	139	156	156	156
AD	87	98	98	118	118	128	128	128
ADS	87	98	98	129	129	139	139	139
L	309	339	353	354	374	385	398	432
LS	345	395	409	422	442	466	479	513
LB	160	190	204	206	226	237	249	283
LBS	196	246	260	273	293	318	330	364

01 563 00 17

RZ07..

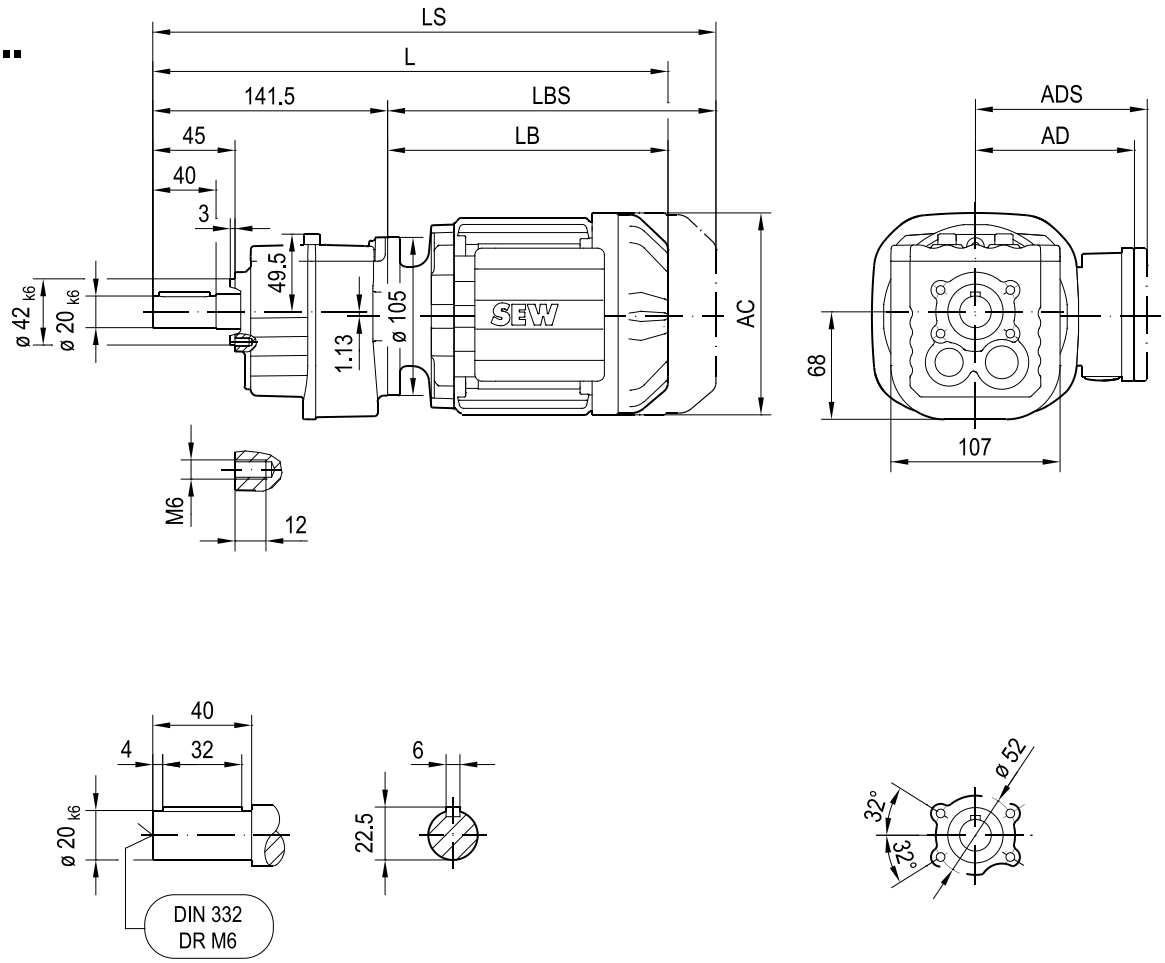

(→ 📖 4.1)	DR2S	DRN						
	56..	63MS	63M	71MS	71M	80MK	80MS	80M
AC	109	115	115	139	139	156	156	156
AD	87	98	98	118	118	128	128	128
ADS	87	98	98	129	129	139	139	139
L	302	332	346	347	367	378	391	425
LS	338	388	402	415	435	459	472	506
LB	160	190	204	206	226	237	249	283
LBS	196	246	260	273	293	318	330	364

01 564 01 17

R17..

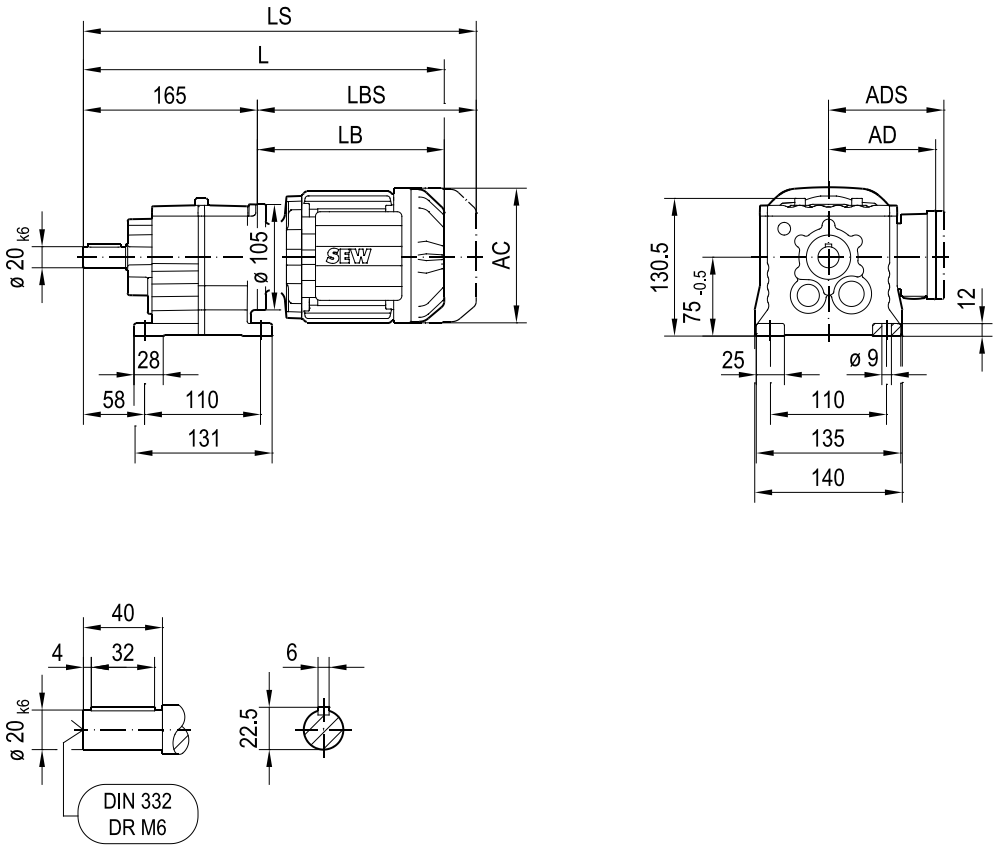

R17F..

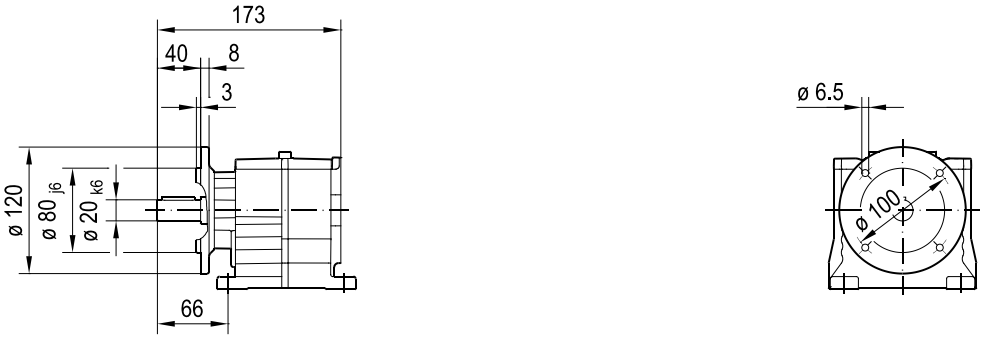

(→ 📖 4.1)	DR2S	DRN						
	56..	63MS	63M	71MS	71M	80MK	80MS	80M
AC	109	115	115	139	139	156	156	156
AD	87	98	98	118	118	128	128	128
ADS	87	98	98	129	129	139	139	139
L	325	355	369	371	391	402	414	448
LS	361	411	425	438	458	483	495	529
LB	160	190	204	206	226	237	249	283
LBS	196	246	260	273	293	318	330	364

01 565 01 17

RF17..

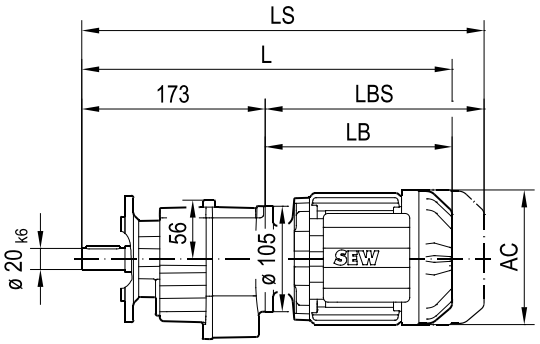

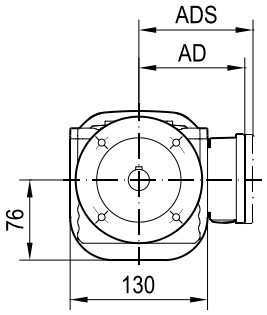

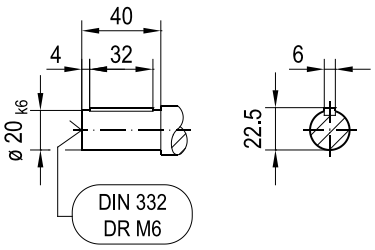

ø 120

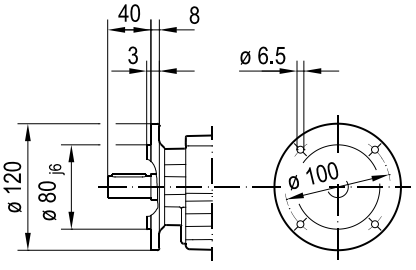

ø 140

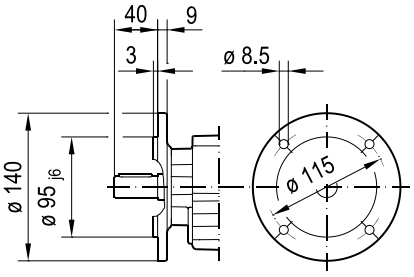

ø 160

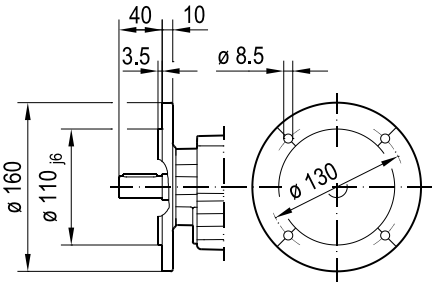

(→ 📖 4.1)	DR2S	DRN						
	56..	63MS	63M	71MS	71M	80MK	80MS	80M
AC	109	115	115	139	139	156	156	156
AD	87	98	98	118	118	128	128	128
ADS	87	98	98	129	129	139	139	139
L	333	363	377	379	399	410	422	456
LS	369	419	433	446	466	491	503	537
LB	160	190	204	206	226	237	249	283
LBS	196	246	260	273	293	318	330	364

01 566 01 17

RZ17..

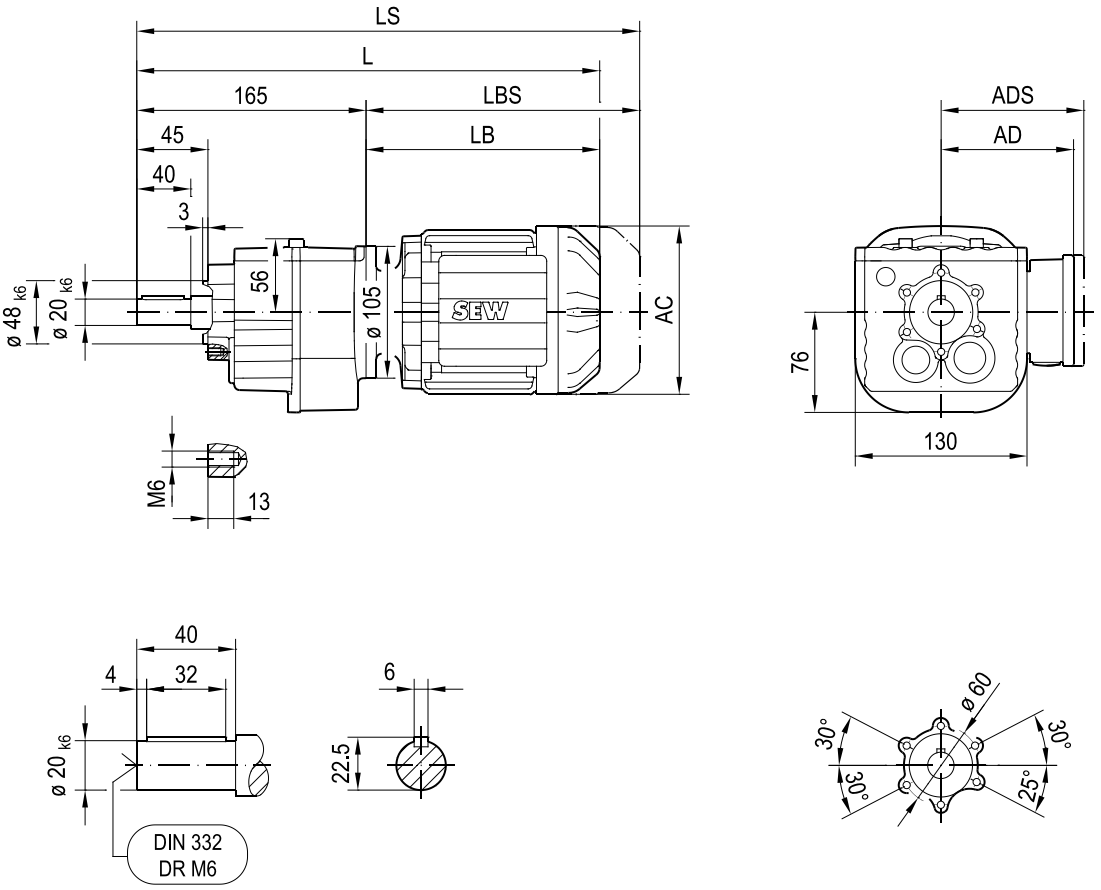

(→ 📖 4.1)	DR2S	DRN						
	56..	63MS	63M	71MS	71M	80MK	80MS	80M
AC	109	115	115	139	139	156	156	156
AD	87	98	98	118	118	128	128	128
ADS	87	98	98	129	129	139	139	139
L	325	355	369	371	391	402	414	448
LS	361	411	425	438	458	483	495	529
LB	160	190	204	206	226	237	249	283
LBS	196	246	260	273	293	318	330	364

01 022 01 14

R27..

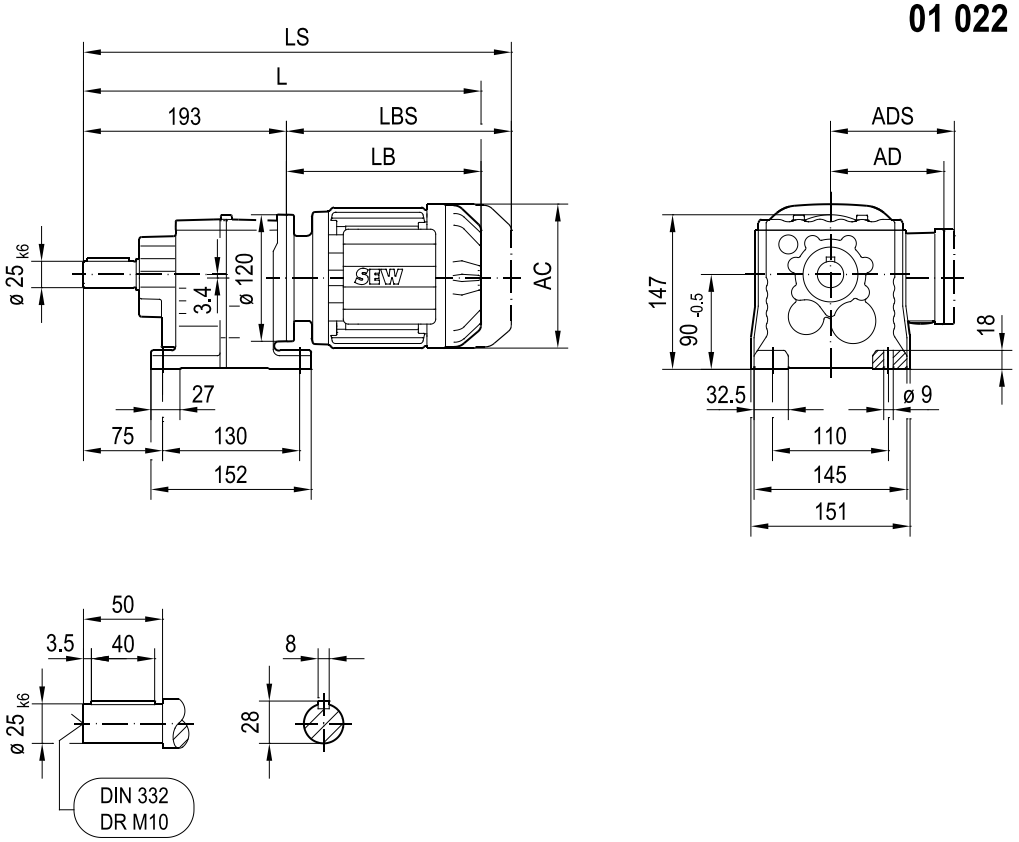

R27F..

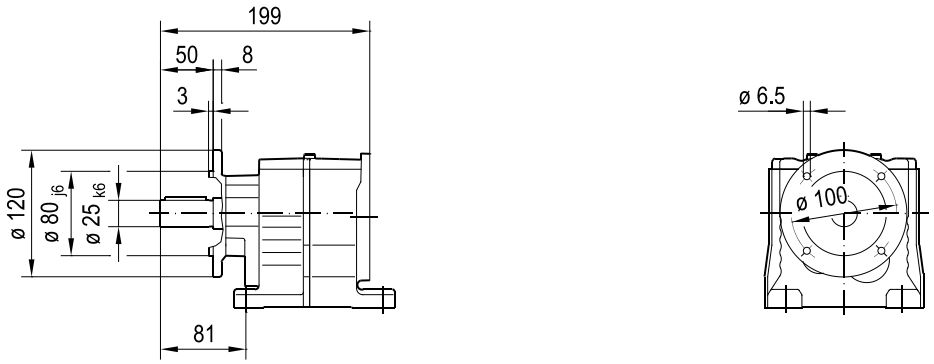

(→ 📖 4.1)	DRN										
	63MS	63M	71MS	71M	80MK	80MS	80M	90S	90L	100LS	100L/LM
AC	115	115	139	139	156	156	156	179	179	197	197
AD	98	98	118	118	128	128	128	140	140	157	157
ADS	98	98	129	129	139	139	139	150	150	158	158
L	383	397	399	419	430	447	476	477	509	507	557
LS	439	453	466	486	511	528	557	571	603	601	651
LB	190	204	206	226	237	254	283	284	316	314	364
LBS	246	260	273	293	318	335	364	378	410	408	458

01 023 01 14

RF27..

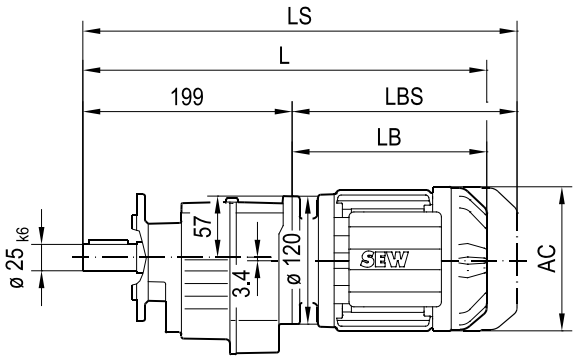

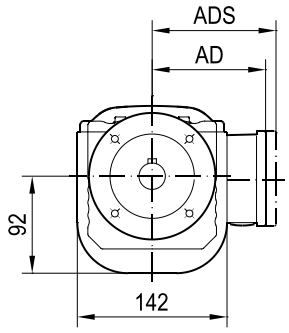

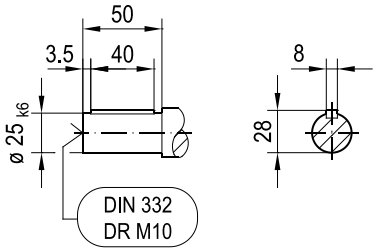

ø 120

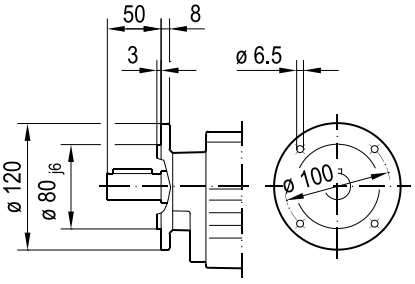

ø 140

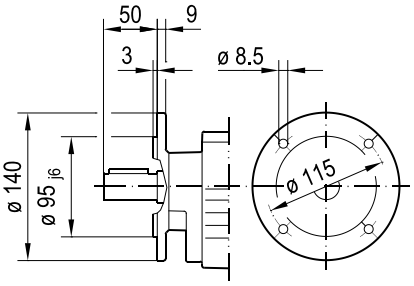

ø 160

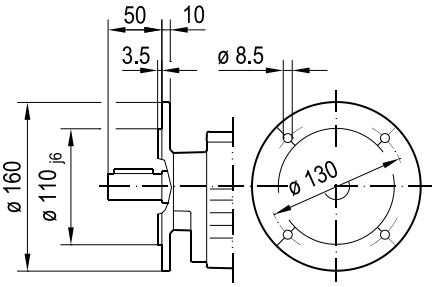

(→ 📖 4.1)	DRN										
	63MS	63M	71MS	71M	80MK	80MS	80M	90S	90L	100LS	100L/LM
AC	115	115	139	139	156	156	156	179	179	197	197
AD	98	98	118	118	128	128	128	140	140	157	157
ADS	98	98	129	129	139	139	139	150	150	158	158
L	389	403	405	425	436	453	482	483	515	513	563
LS	445	459	472	492	517	534	563	577	609	607	657
LB	190	204	206	226	237	254	283	284	316	314	364
LBS	246	260	273	293	318	335	364	378	410	408	458

01 024 02 14

RZ27..

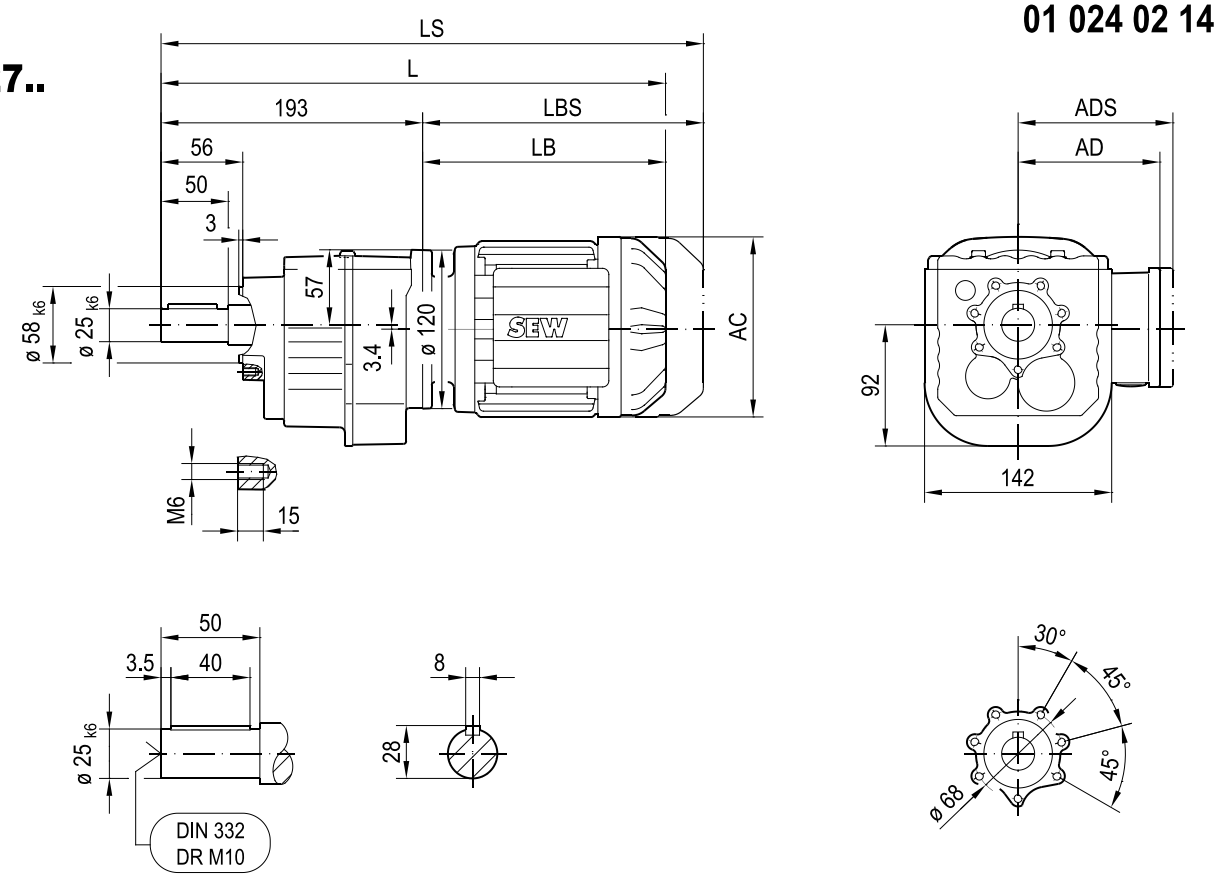

(→ 📖 4.1)	DRN										
	63MS	63M	71MS	71M	80MK	80MS	80M	90S	90L	100LS	100L/LM
AC	115	115	139	139	156	156	156	179	179	197	197
AD	98	98	118	118	128	128	128	140	140	157	157
ADS	98	98	129	129	139	139	139	150	150	158	158
L	383	397	399	419	430	447	476	477	509	507	557
LS	439	453	466	486	511	528	557	571	603	601	651
LB	190	204	206	226	237	254	283	284	316	314	364
LBS	246	260	273	293	318	335	364	378	410	408	458

01 025 01 14

R37..

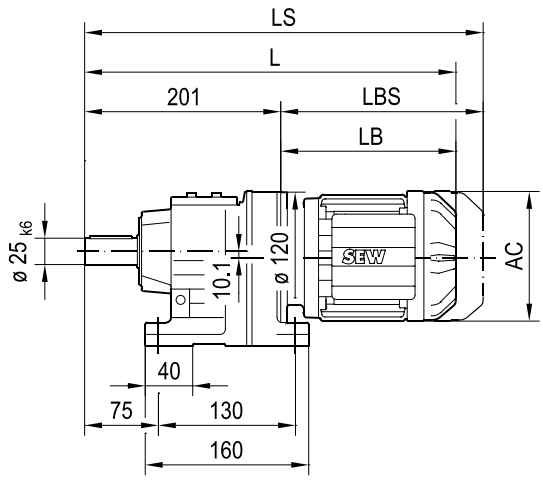

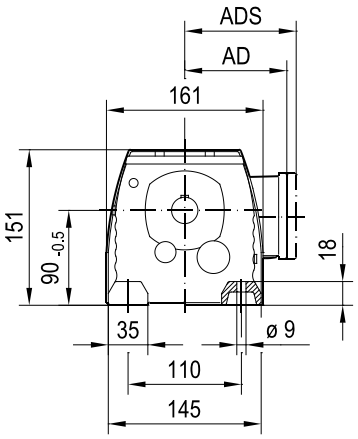

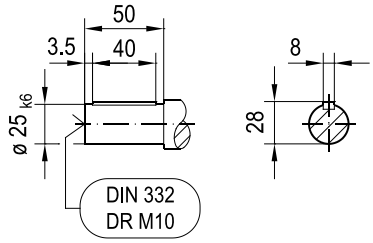

R37F..

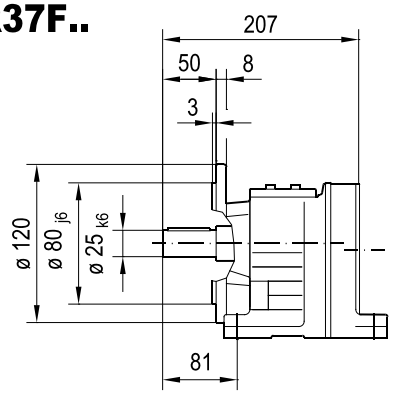

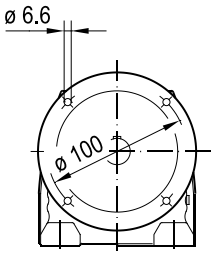

(→ 📖 4.1)	DRN										
	63MS	63M	71MS	71M	80MK	80MS	80M	90S	90L	100LS	100L/LM
AC	115	115	139	139	156	156	156	179	179	197	197
AD	98	98	118	118	128	128	128	140	140	157	157
ADS	98	98	129	129	139	139	139	150	150	158	158
L	391	405	407	427	438	455	484	485	517	515	565
LS	447	461	474	494	519	536	565	579	611	609	659
LB	190	204	206	226	237	254	283	284	316	314	364
LBS	246	260	273	293	318	335	364	378	410	408	458

01 026 01 14

RF37..

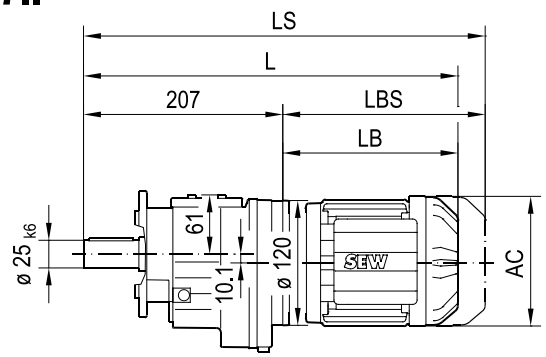

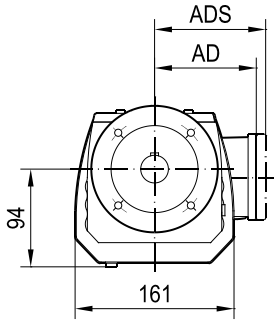

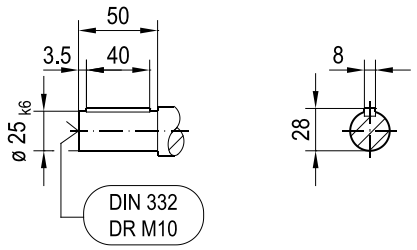

ø 120

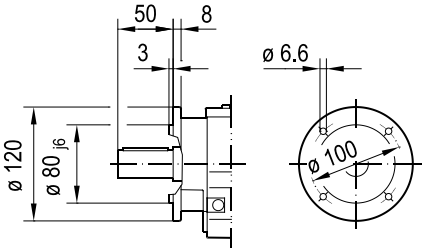

ø 140

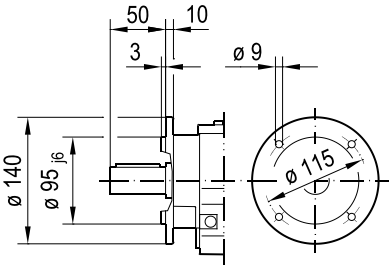

ø 160

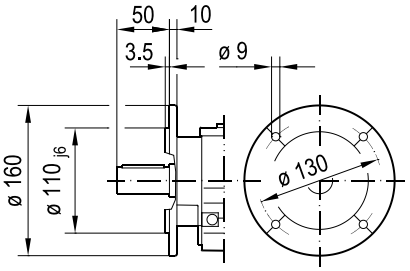

ø 200

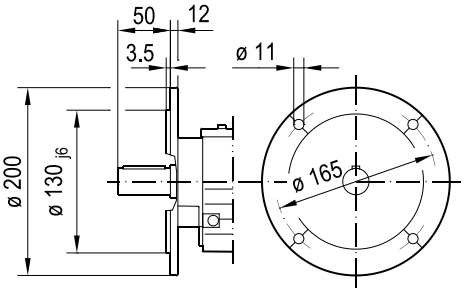

(→ 📖 4.1)	DRN										
	63MS	63M	71MS	71M	80MK	80MS	80M	90S	90L	100LS	100L/LM
AC	115	115	139	139	156	156	156	179	179	197	197
AD	98	98	118	118	128	128	128	140	140	157	157
ADS	98	98	129	129	139	139	139	150	150	158	158
L	397	411	413	433	444	461	490	491	523	521	571
LS	453	467	480	500	525	542	571	585	617	615	665
LB	190	204	206	226	237	254	283	284	316	314	364
LBS	246	260	273	293	318	335	364	378	410	408	458

RZ37..

01 027 01 14

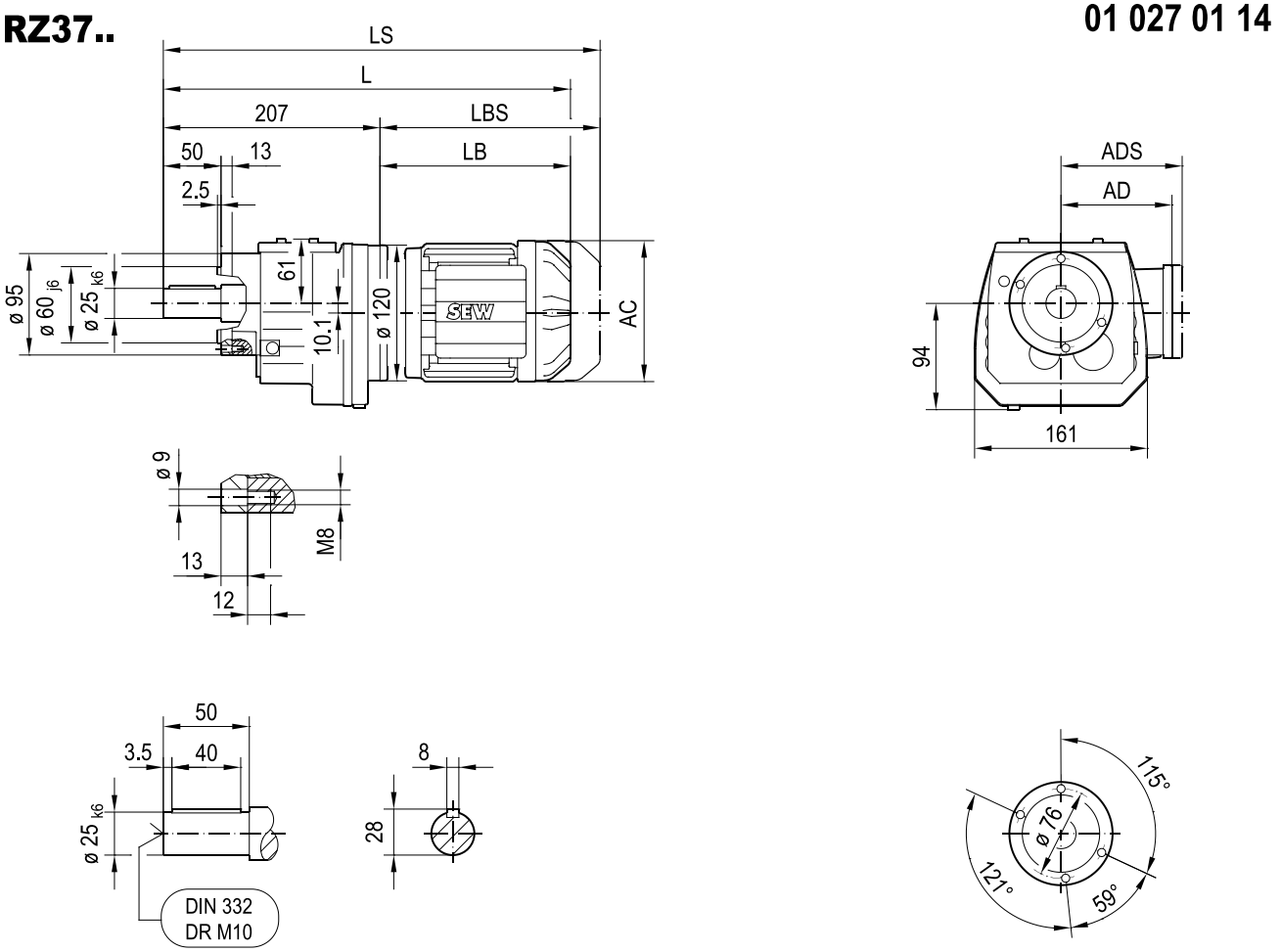

(→ 📖 4.1)	DRN										
	63MS	63M	71MS	71M	80MK	80MS	80M	90S	90L	100LS	100L/LM
AC	115	115	139	139	156	156	156	179	179	197	197
AD	98	98	118	118	128	128	128	140	140	157	157
ADS	98	98	129	129	139	139	139	150	150	158	158
L	397	411	413	433	444	461	490	491	523	521	571
LS	453	467	480	500	525	542	571	585	617	615	665
LB	190	204	206	226	237	254	283	284	316	314	364
LBS	246	260	273	293	318	335	364	378	410	408	458

01 028 01 14

R47..

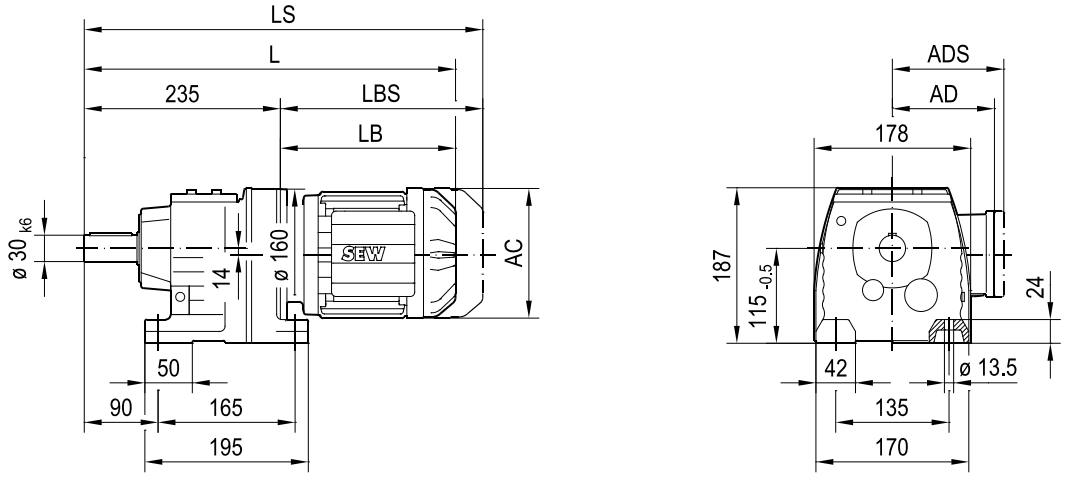

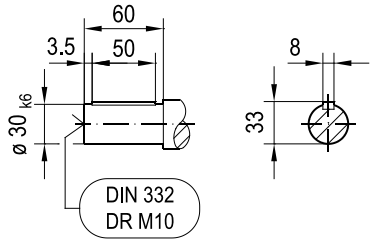

R47F..

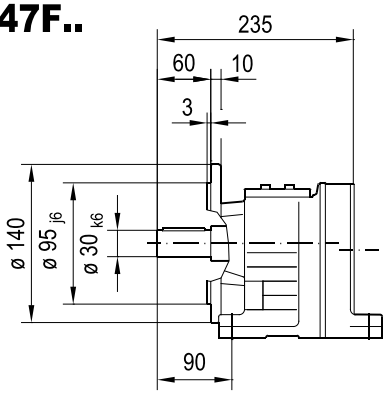

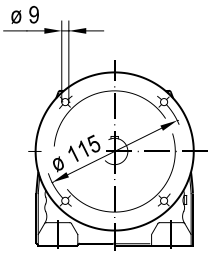

(→ 📖 4.1)	DRN												
	63MS	63M	71MS	71M	80MK	80MS	80M	90S	90L	100LS	100L/LM	112M	132S
AC	115	115	139	139	156	156	156	179	179	197	197	221	221
AD	98	98	118	118	128	128	128	140	140	157	157	170	170
ADS	98	98	129	129	139	139	139	150	150	158	158	172	172
L	419	433	434	454	465	482	511	513	545	540	590	621	675
LS	475	489	502	522	546	563	592	606	638	634	684	733	787
LB	184	198	199	219	230	247	276	278	310	305	355	386	440
LBS	240	254	267	287	311	328	357	371	403	399	449	498	552

01 029 01 14

RF47..

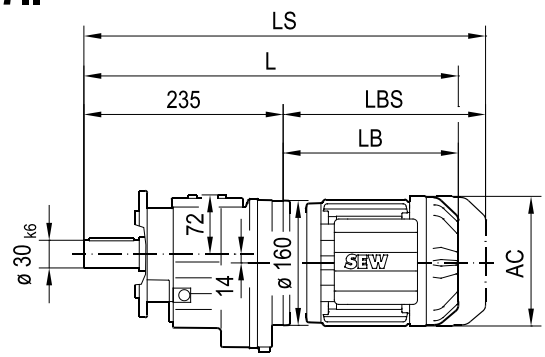

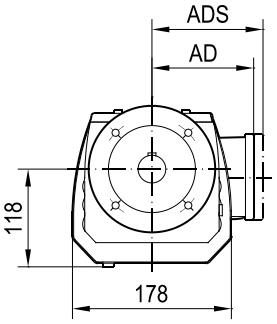

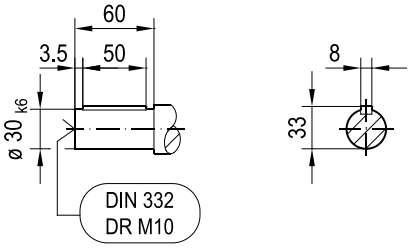

ø 140

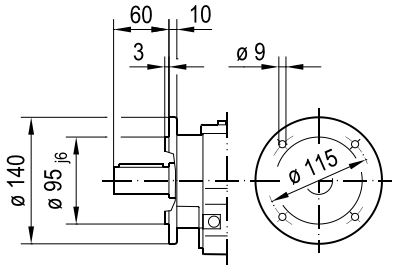

ø 160

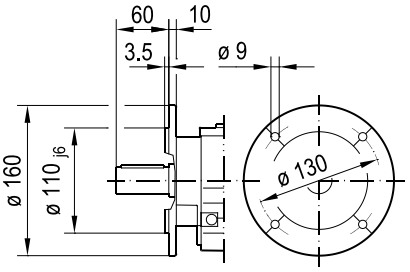

ø 200

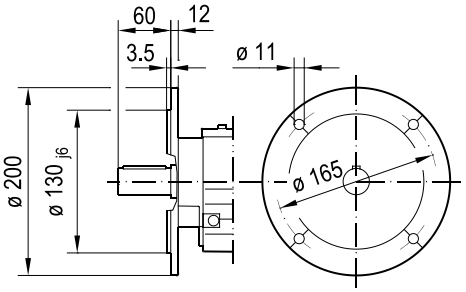

(→ 📖 4.1)	DRN												
	63MS	63M	71MS	71M	80MK	80MS	80M	90S	90L	100LS	100L/LM	112M	132S
AC	115	115	139	139	156	156	156	179	179	197	197	221	221
AD	98	98	118	118	128	128	128	140	140	157	157	170	170
ADS	98	98	129	129	139	139	139	150	150	158	158	172	172
L	419	433	434	454	465	482	511	513	545	540	590	621	675
LS	475	489	502	522	546	563	592	606	638	634	684	733	787
LB	184	198	199	219	230	247	276	278	310	305	355	386	440
LBS	240	254	267	287	311	328	357	371	403	399	449	498	552

RZ47..

01 030 01 14

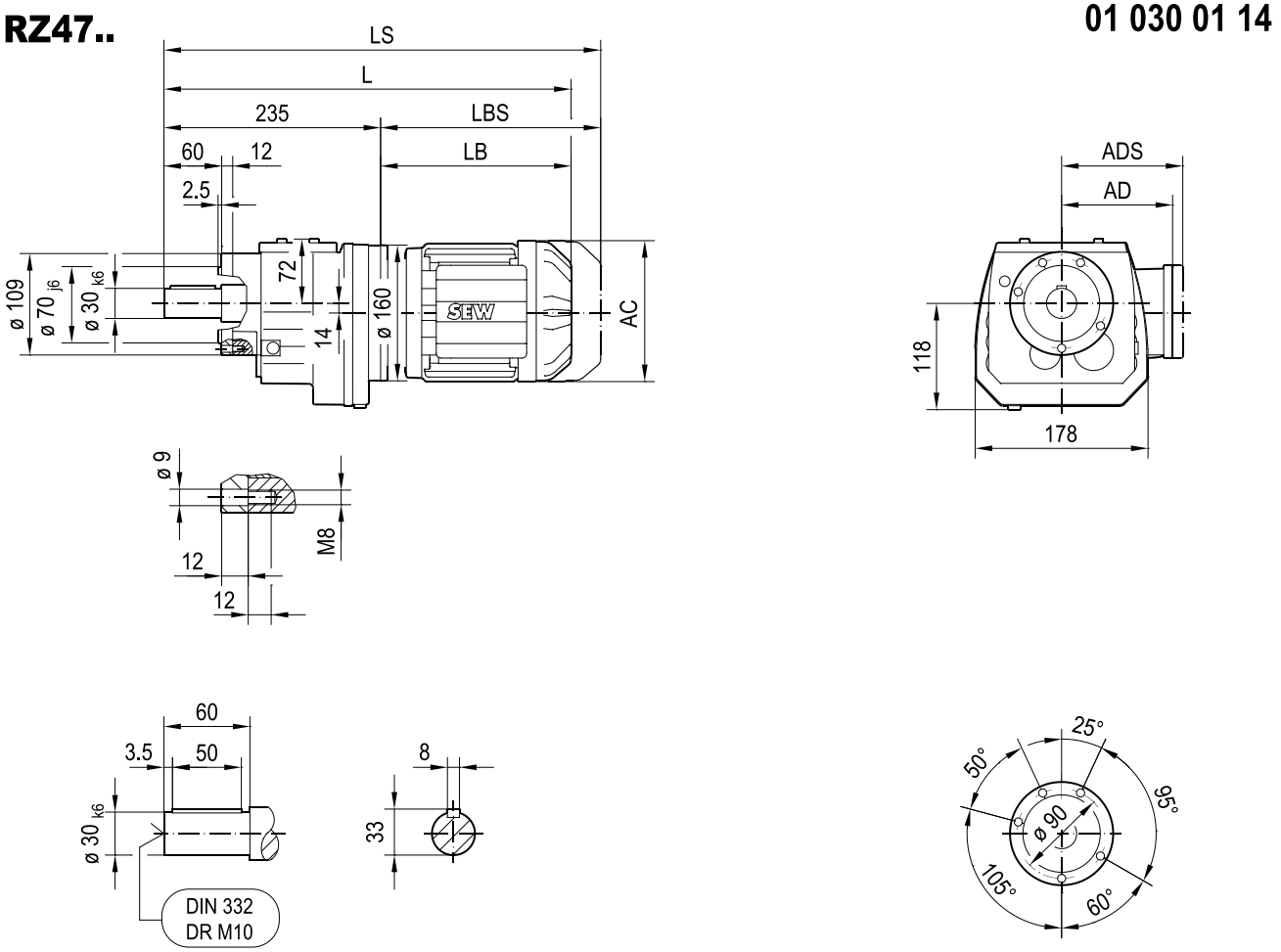

(→ 📖 4.1)	DRN												
	63MS	63M	71MS	71M	80MK	80MS	80M	90S	90L	100LS	100L/LM	112M	132S
AC	115	115	139	139	156	156	156	179	179	197	197	221	221
AD	98	98	118	118	128	128	128	140	140	157	157	170	170
ADS	98	98	129	129	139	139	139	150	150	158	158	172	172
L	419	433	434	454	465	482	511	513	545	540	590	621	675
LS	475	489	502	522	546	563	592	606	638	634	684	733	787
LB	184	198	199	219	230	247	276	278	310	305	355	386	440
LBS	240	254	267	287	311	328	357	371	403	399	449	498	552

01 031 02 14

R57..

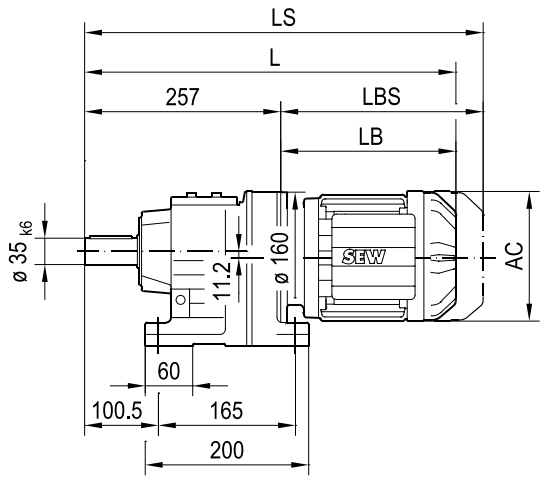

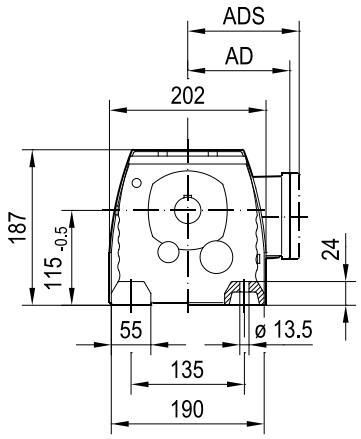

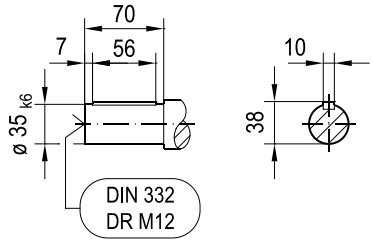

R57F..

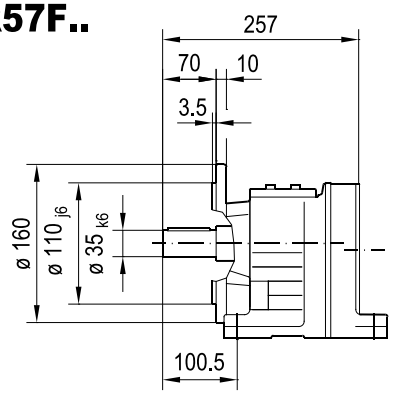

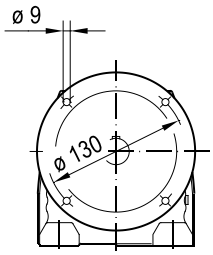

(→ 📖 4.1)	DRN													
	63MS	63M	71MS	71M	80MK	80MS	80M	90S	90L	100LS	100L/LM	112M	132S	132M
AC	115	115	139	139	156	156	156	179	179	197	197	221	221	261
AD	98	98	118	118	128	128	128	140	140	157	157	170	170	228
ADS	98	98	129	129	139	139	139	150	150	158	158	172	172	228
L	441	455	456	476	487	504	533	535	567	562	612	643	697	715
LS	497	511	524	544	568	585	614	628	660	656	706	755	809	853
LB	184	198	199	219	230	247	276	278	310	305	355	386	440	458
LBS	240	254	267	287	311	328	357	371	403	399	449	498	552	596

RF57..

01 032 01 14

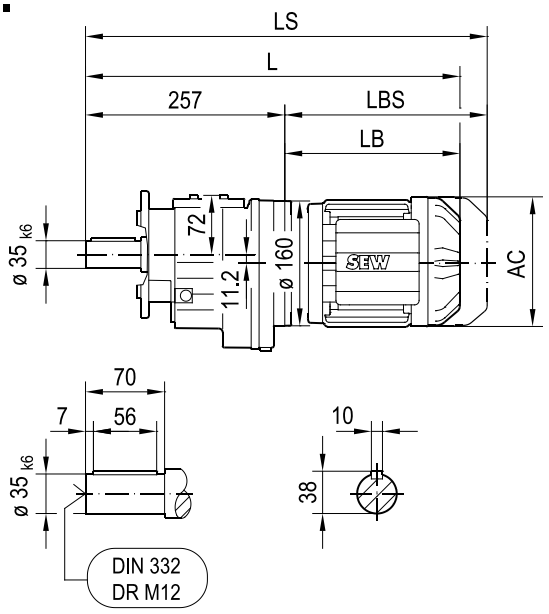

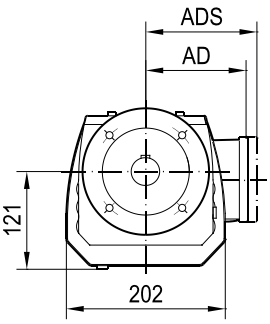

ø 160

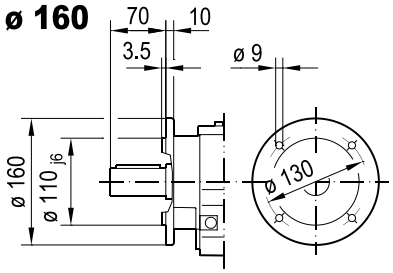

ø 200

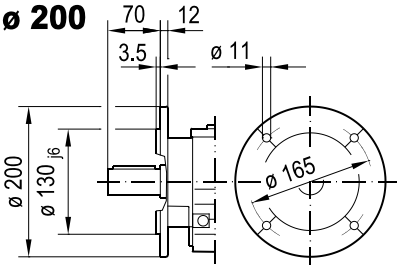

ø 250

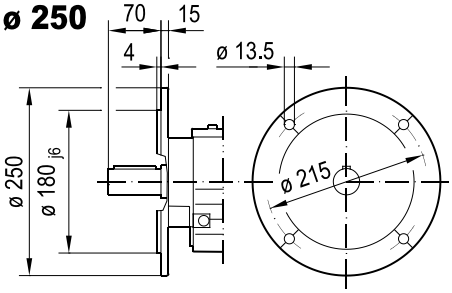

RM57..

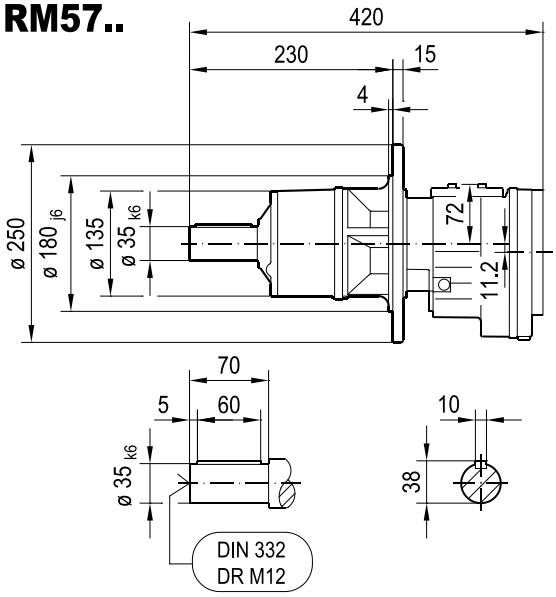

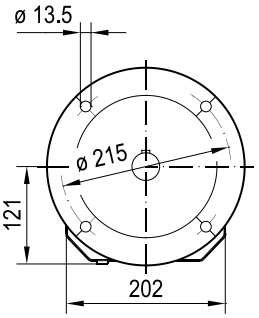

(→ 📖 4.1)	DRN													
	63MS	63M	71MS	71M	80MK	80MS	80M	90S	90L	100LS	100L/LM	112M	132S	132M
AC	115	115	139	139	156	156	156	179	179	197	197	221	221	261
AD	98	98	118	118	128	128	128	140	140	157	157	170	170	228
ADS	98	98	129	129	139	139	139	150	150	158	158	172	172	228
L	441	455	456	476	487	504	533	535	567	562	612	643	697	715
LS	497	511	524	544	568	585	614	628	660	656	706	755	809	853
LB	184	198	199	219	230	247	276	278	310	305	355	386	440	458
LBS	240	254	267	287	311	328	357	371	403	399	449	498	552	596

RZ57..

01 033 01 14

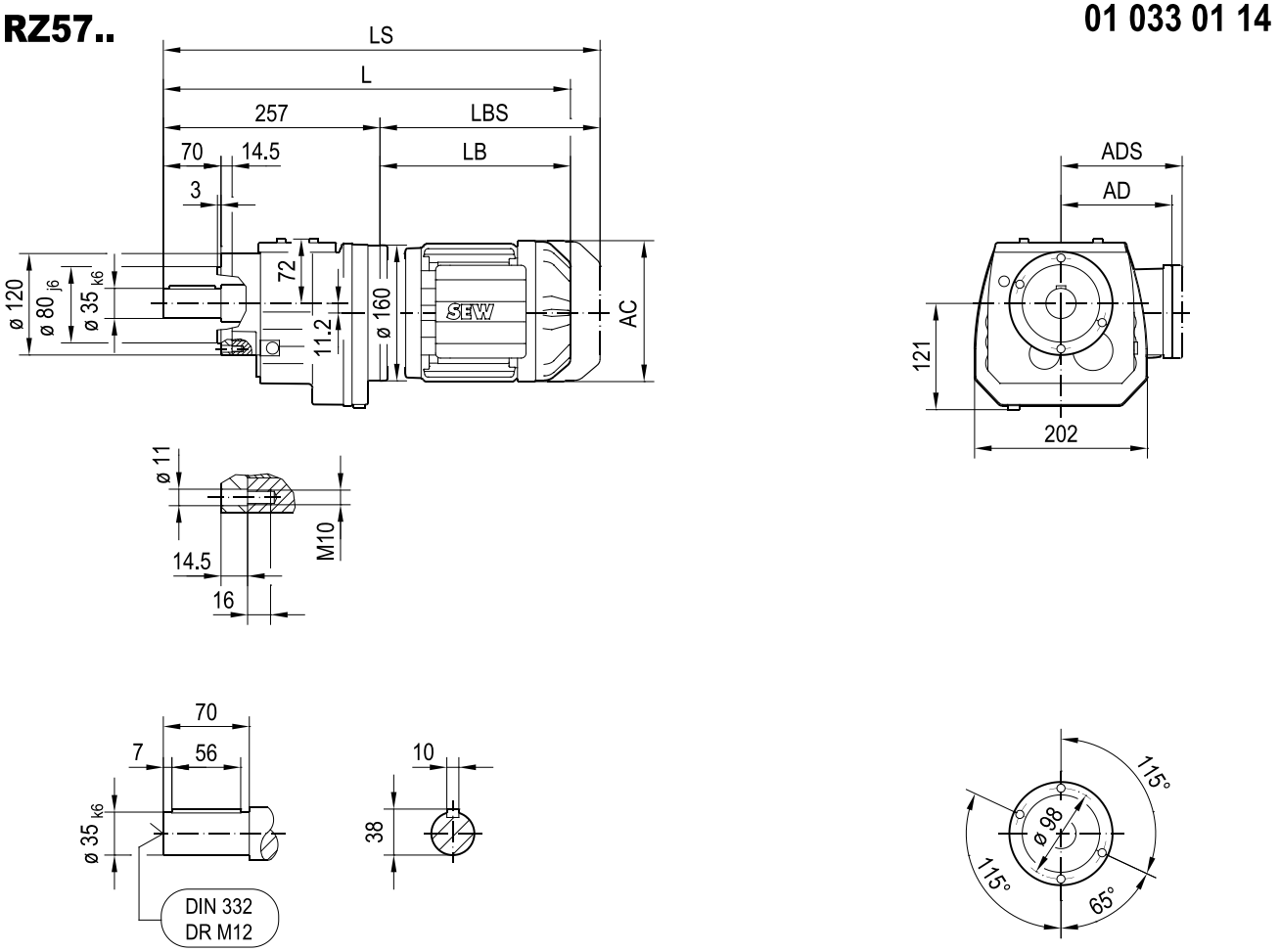

(→ 📖 4.1)	DRN													
	63MS	63M	71MS	71M	80MK	80MS	80M	90S	90L	100LS	100L/LM	112M	132S	132M
AC	115	115	139	139	156	156	156	179	179	197	197	221	221	261
AD	98	98	118	118	128	128	128	140	140	157	157	170	170	228
ADS	98	98	129	129	139	139	139	150	150	158	158	172	172	228
L	441	455	456	476	487	504	533	535	567	562	612	643	697	715
LS	497	511	524	544	568	585	614	628	660	656	706	755	809	853
LB	184	198	199	219	230	247	276	278	310	305	355	386	440	458
LBS	240	254	267	287	311	328	357	371	403	399	449	498	552	596

01 034 01 14

R67..

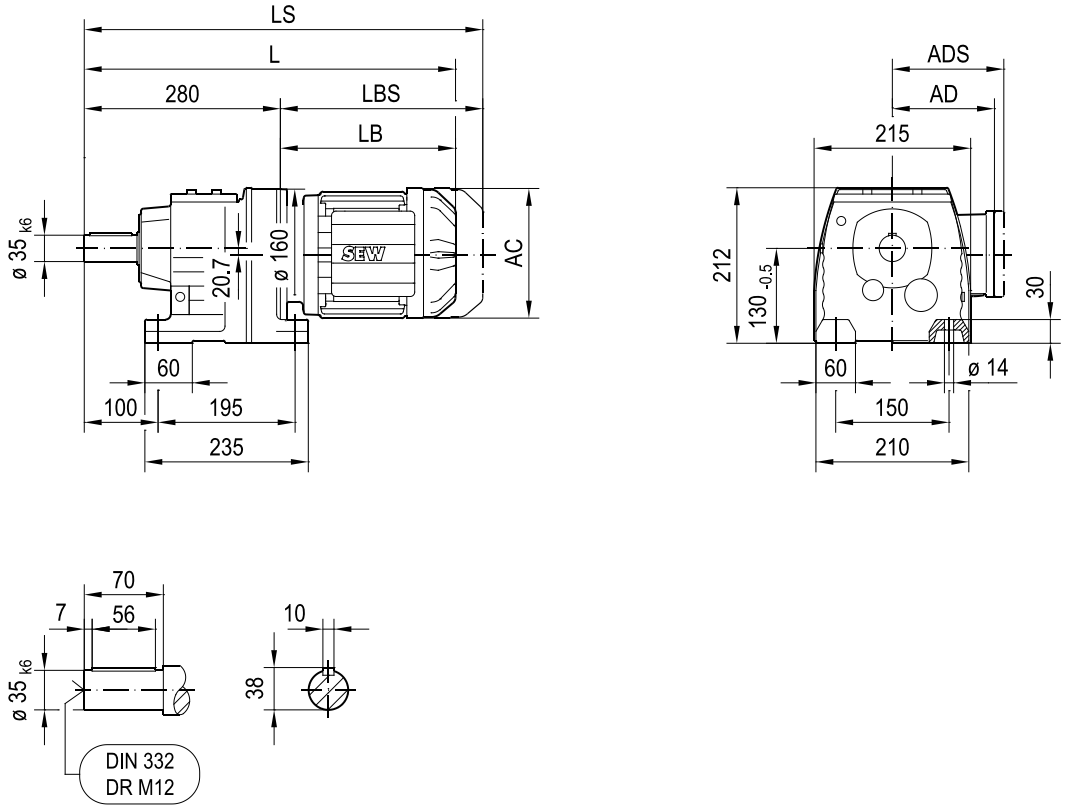

R67F..

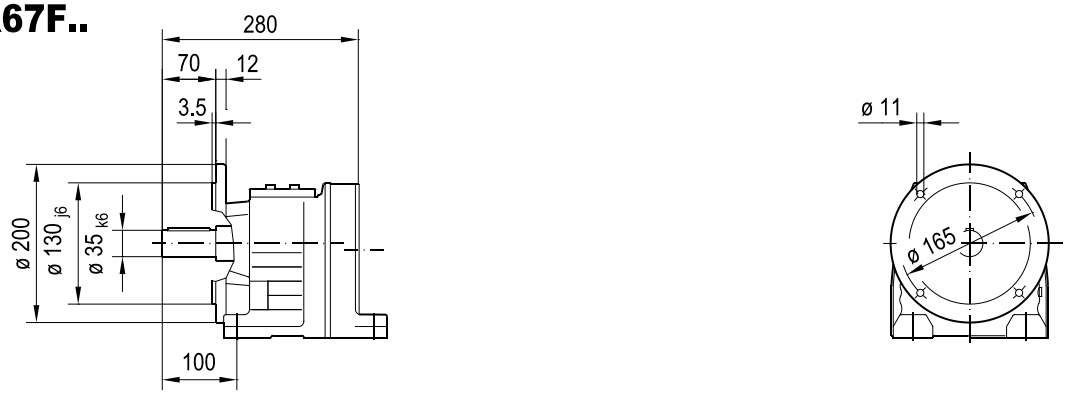

(→ 📖 4.1)	DRN													
	63MS	63M	71MS	71M	80MK	80MS	80M	90S	90L	100LS	100L/LM	112M	132S	132M
AC	115	115	139	139	156	156	156	179	179	197	197	221	221	261
AD	98	98	118	118	128	128	128	140	140	157	157	170	170	228
ADS	98	98	129	129	139	139	139	150	150	158	158	172	172	228
L	464	478	479	499	510	527	556	558	590	585	635	666	720	738
LS	520	534	547	567	591	608	637	651	683	679	729	778	832	876
LB	184	198	199	219	230	247	276	278	310	305	355	386	440	458
LBS	240	254	267	287	311	328	357	371	403	399	449	498	552	596

01 035 02 14

RF67..

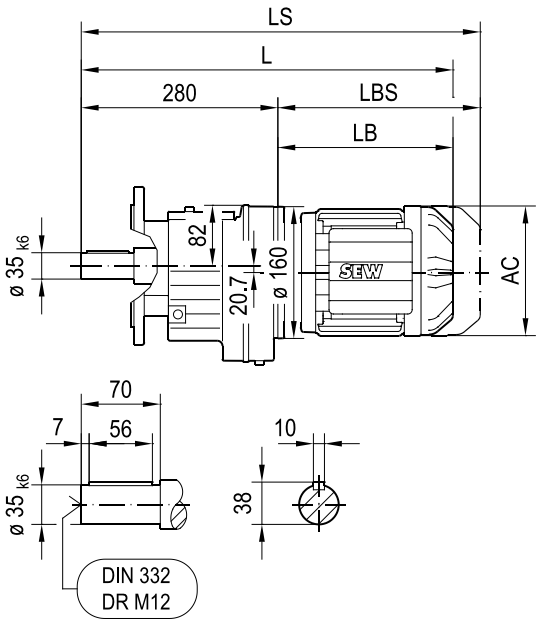

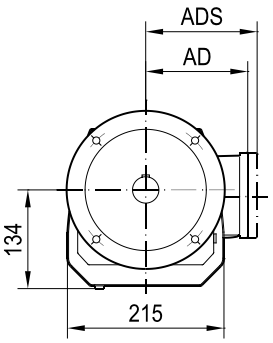

ø 200

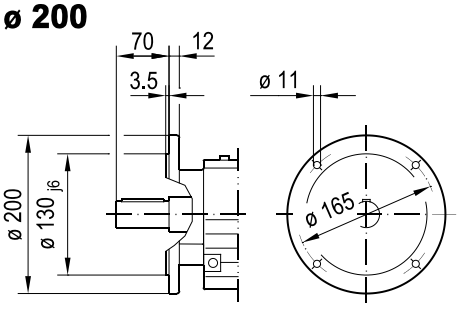

ø 250

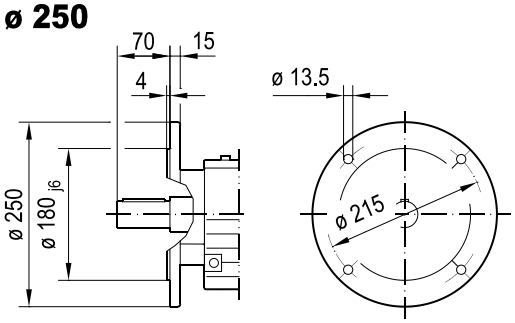

RM67..

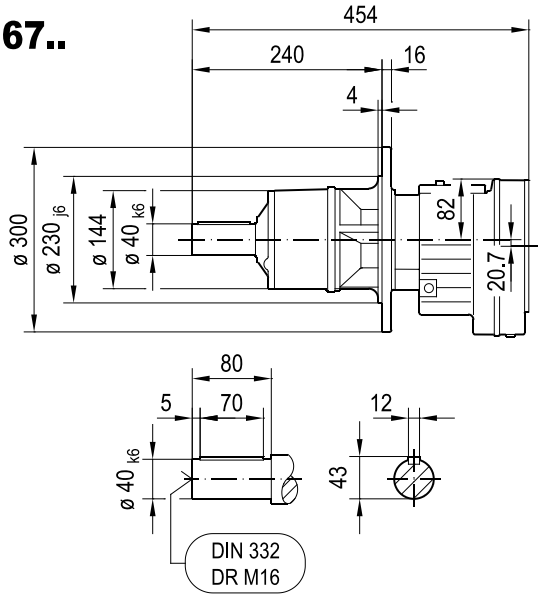

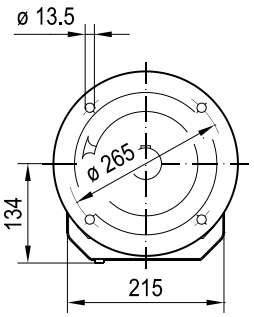

(→ 📖 4.1)	DRN													
	63MS	63M	71MS	71M	80MK	80MS	80M	90S	90L	100LS	100L/LM	112M	132S	132M
AC	115	115	139	139	156	156	156	179	179	197	197	221	221	261
AD	98	98	118	118	128	128	128	140	140	157	157	170	170	228
ADS	98	98	129	129	139	139	139	150	150	158	158	172	172	228
L	464	478	479	499	510	527	556	558	590	585	635	666	720	738
LS	520	534	547	567	591	608	637	651	683	679	729	778	832	876
LB	184	198	199	219	230	247	276	278	310	305	355	386	440	458
LBS	240	254	267	287	311	328	357	371	403	399	449	498	552	596

01 036 01 14

RZ67..

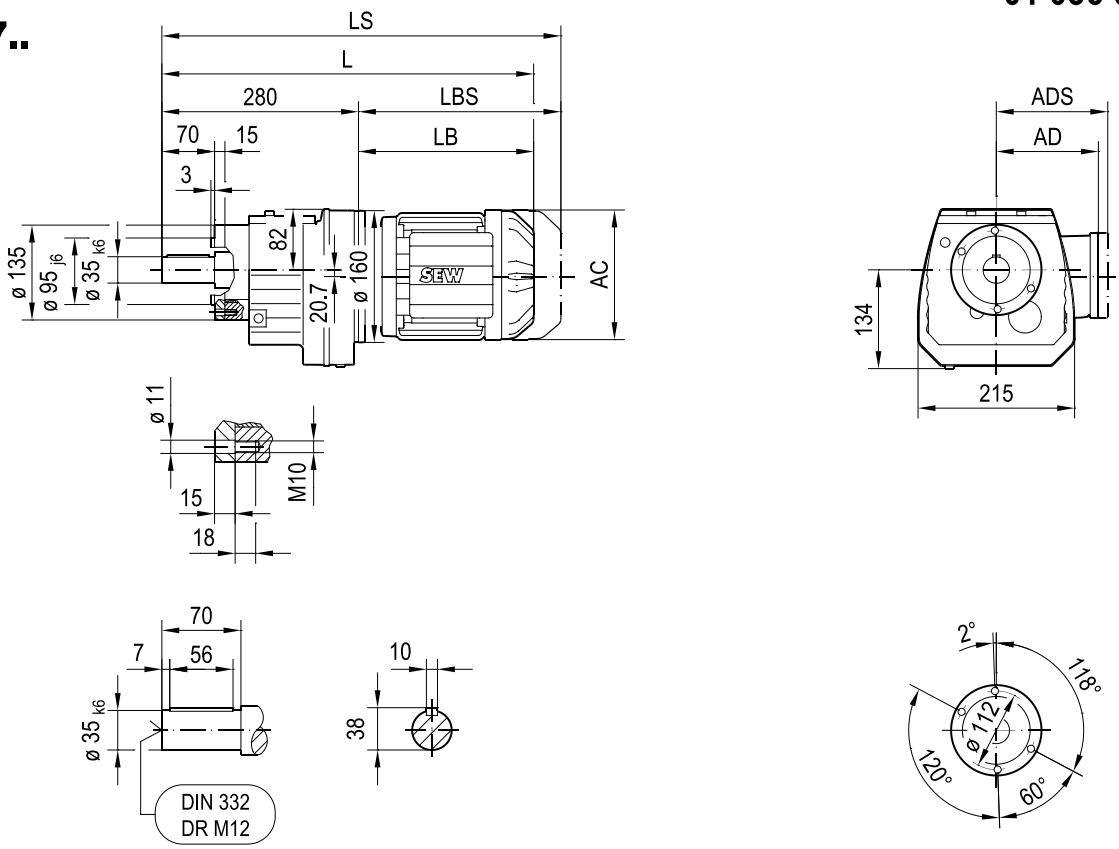

(→ 📖 4.1)	DRN													
	63MS	63M	71MS	71M	80MK	80MS	80M	90S	90L	100LS	100L/LM	112M	132S	132M
AC	115	115	139	139	156	156	156	179	179	197	197	221	221	261
AD	98	98	118	118	128	128	128	140	140	157	157	170	170	228
ADS	98	98	129	129	139	139	139	150	150	158	158	172	172	228
L	464	478	479	499	510	527	556	558	590	585	635	666	720	738
LS	520	534	547	567	591	608	637	651	683	679	729	778	832	876
LB	184	198	199	219	230	247	276	278	310	305	355	386	440	458
LBS	240	254	267	287	311	328	357	371	403	399	449	498	552	596

01 037 01 14

R77..

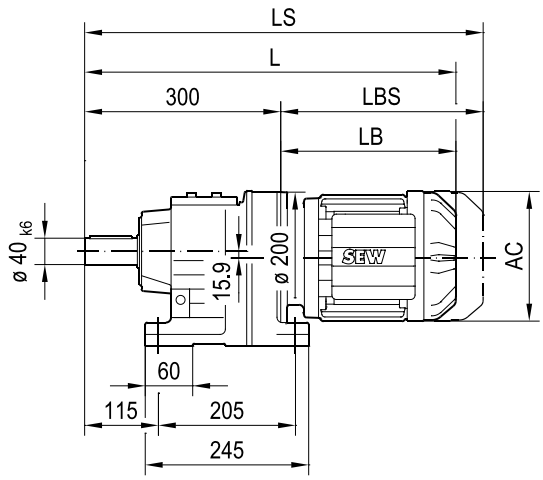

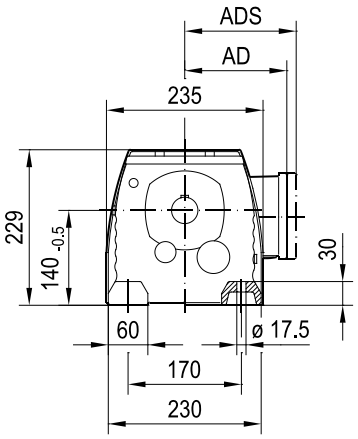

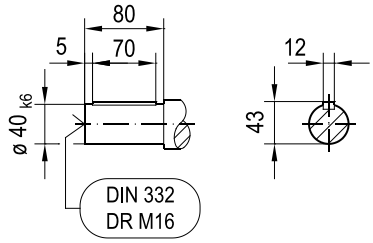

R77F..

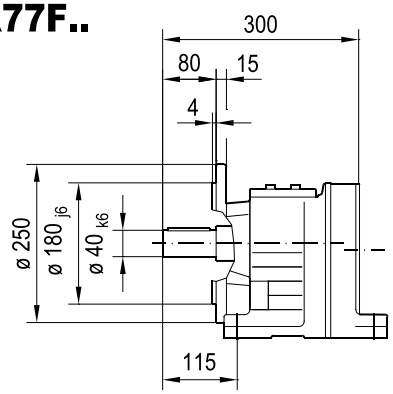

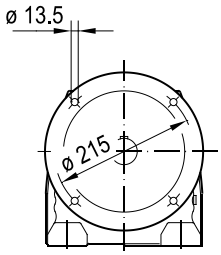

(→ 📖 4.1)	DRN														
	63M	71MS	71M	80MK	80MS	80M	90S	90L	100LS	100L/LM	112M	132S	132M	132L	160..
AC	115	139	139	156	156	156	179	179	197	197	221	221	261	261	314
AD	98	118	118	128	128	128	140	140	157	157	170	170	228	228	253
ADS	98	129	129	139	139	139	150	150	158	158	172	172	228	228	253
L	491	492	512	523	540	569	571	603	598	648	679	729	747	773	839
LS	547	560	580	604	621	650	664	696	692	742	791	841	885	910	1028
LB	191	192	212	223	240	269	271	303	298	348	379	429	447	473	539
LBS	247	260	280	304	321	350	364	396	392	442	491	541	585	610	728

01 038 01 14

RF77..

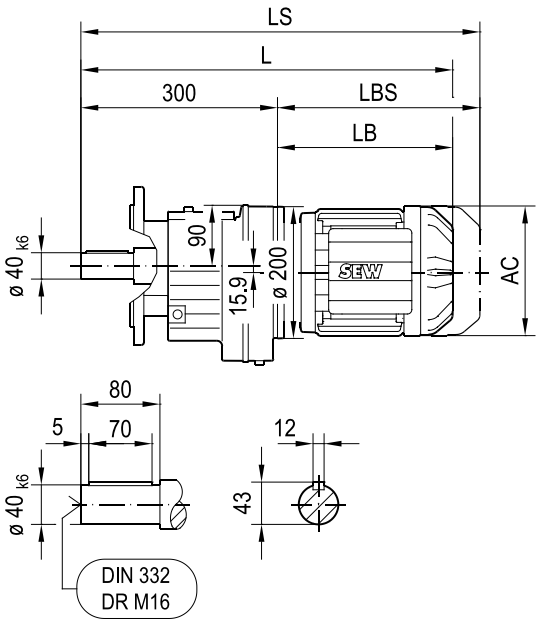

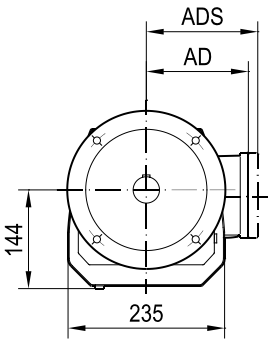

ø 250

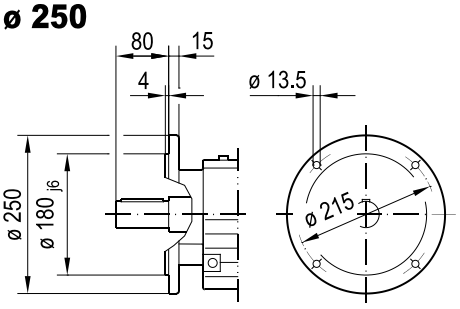

ø 300

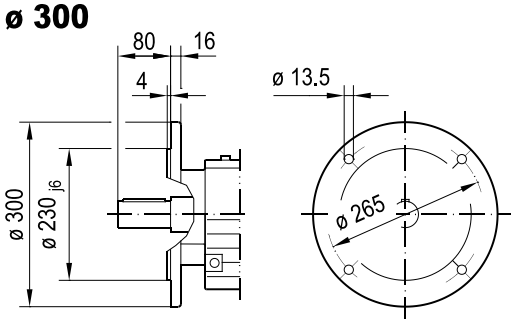

RM77..

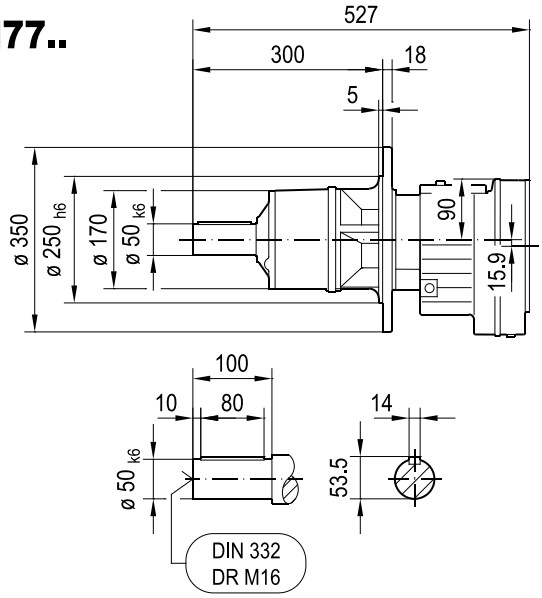

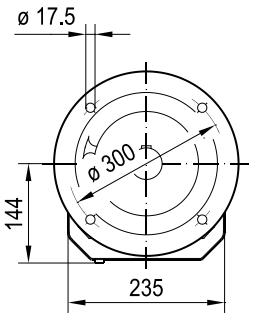

(→ 📖 4.1)	DRN														
	63M	71MS	71M	80MK	80MS	80M	90S	90L	100LS	100L/LM	112M	132S	132M	132L	160..
AC	115	139	139	156	156	156	179	179	197	197	221	221	261	261	314
AD	98	118	118	128	128	128	140	140	157	157	170	170	228	228	253
ADS	98	129	129	139	139	139	150	150	158	158	172	172	228	228	253
L	491	492	512	523	540	569	571	603	598	648	679	729	747	773	839
LS	547	560	580	604	621	650	664	696	692	742	791	841	885	910	1028
LB	191	192	212	223	240	269	271	303	298	348	379	429	447	473	539
LBS	247	260	280	304	321	350	364	396	392	442	491	541	585	610	728

01 039 01 14

RZ77..

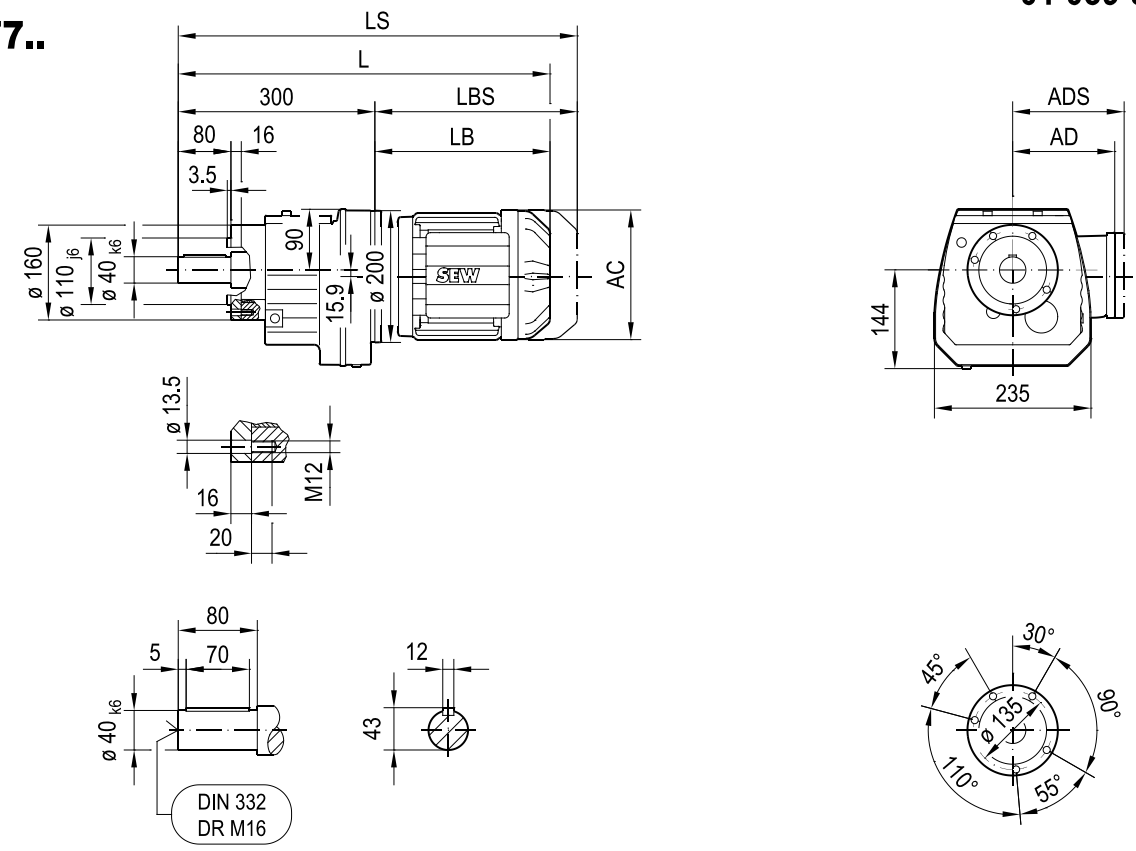

(→ 📖 4.1)	DRN														
	63M	71MS	71M	80MK	80MS	80M	90S	90L	100LS	100L/LM	112M	132S	132M	132L	160..
AC	115	139	139	156	156	156	179	179	197	197	221	221	261	261	314
AD	98	118	118	128	128	128	140	140	157	157	170	170	228	228	253
ADS	98	129	129	139	139	139	150	150	158	158	172	172	228	228	253
L	491	492	512	523	540	569	571	603	598	648	679	729	747	773	839
LS	547	560	580	604	621	650	664	696	692	742	791	841	885	910	1028
LB	191	192	212	223	240	269	271	303	298	348	379	429	447	473	539
LBS	247	260	280	304	321	350	364	396	392	442	491	541	585	610	728

01 040 01 14

R87..

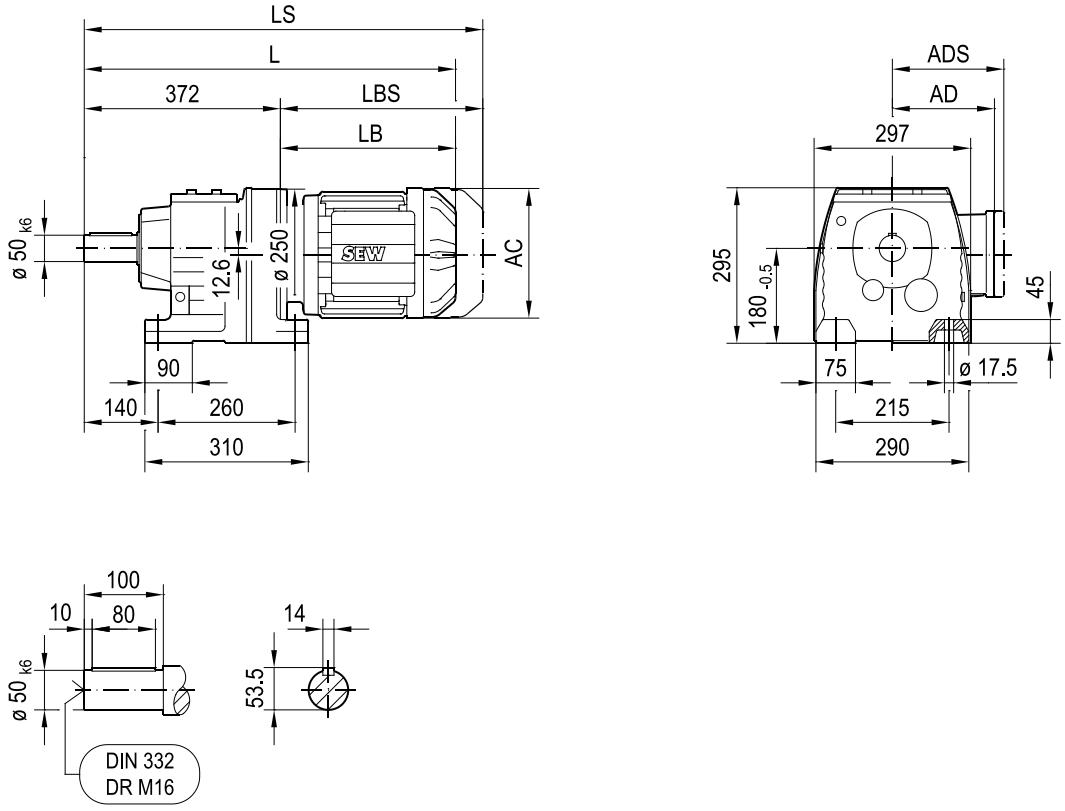

R87F..

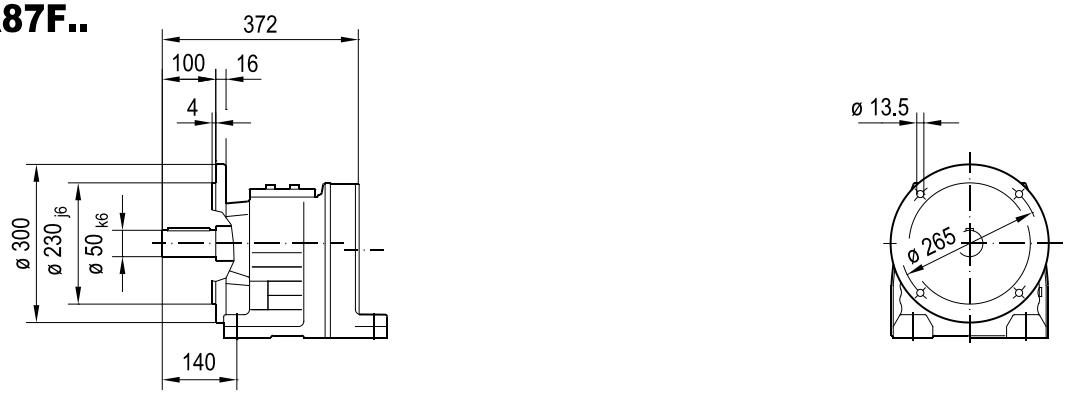

(→ 📖 4.1)	DRN														
	71M	80MK	80MS	80M	90S	90L	100LS	100L/LM	112M	132S	132M	132L	160..	180..	200L
AC	139	156	156	156	179	179	197	197	221	221	261	261	314	357	394
AD	118	128	128	128	140	140	157	157	170	170	228	228	253	268	283
ADS	129	139	139	139	150	150	158	158	172	172	228	228	253	268	283
L	579	590	607	636	638	670	665	715	746	796	814	840	906	929	1039
LS	647	671	688	717	731	763	759	809	858	908	952	977	1095	1118	1244
LB	207	218	235	264	266	298	293	343	374	424	442	468	534	557	667
LBS	275	299	316	345	359	391	387	437	486	536	580	605	723	746	872

01 041 01 14

RF87..

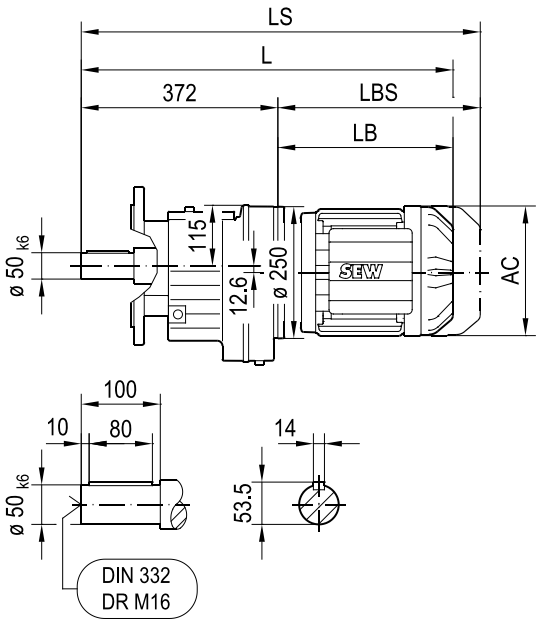

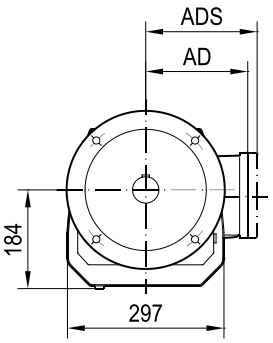

ø 300

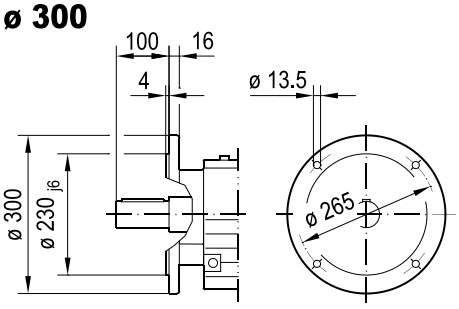

ø 350

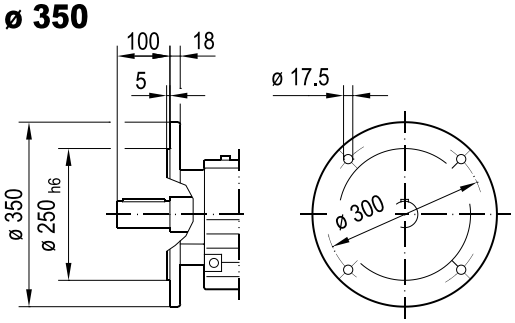

RM87..

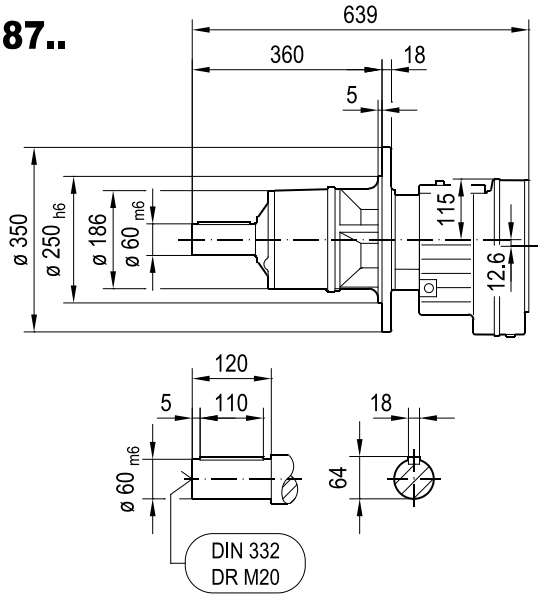

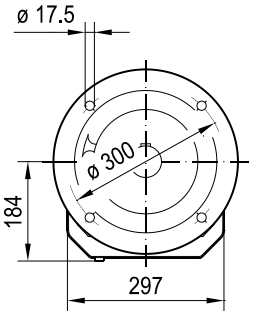

(→ 📖 4.1)	DRN														
	71M	80MK	80MS	80M	90S	90L	100LS	100L/LM	112M	132S	132M	132L	160..	180..	200L
AC	139	156	156	156	179	179	197	197	221	221	261	261	314	357	394
AD	118	128	128	128	140	140	157	157	170	170	228	228	253	268	283
ADS	129	139	139	139	150	150	158	158	172	172	228	228	253	268	283
L	579	590	607	636	638	670	665	715	746	796	814	840	906	929	1039
LS	647	671	688	717	731	763	759	809	858	908	952	977	1095	1118	1244
LB	207	218	235	264	266	298	293	343	374	424	442	468	534	557	667
LBS	275	299	316	345	359	391	387	437	486	536	580	605	723	746	872

01 042 01 14

RZ87..

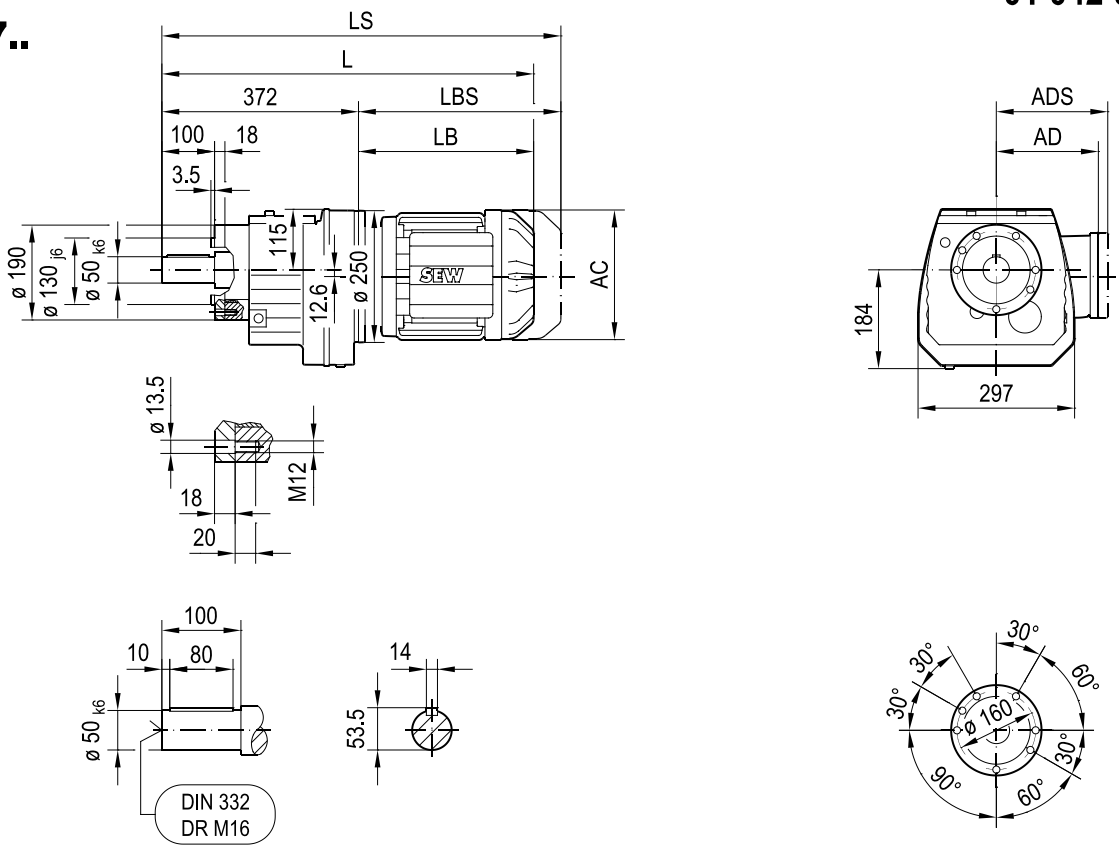

(→ 📖 4.1)	DRN														
	71M	80MK	80MS	80M	90S	90L	100LS	100L/LM	112M	132S	132M	132L	160..	180..	200L
AC	139	156	156	156	179	179	197	197	221	221	261	261	314	357	394
AD	118	128	128	128	140	140	157	157	170	170	228	228	253	268	283
ADS	129	139	139	139	150	150	158	158	172	172	228	228	253	268	283
L	579	590	607	636	638	670	665	715	746	796	814	840	906	929	1039
LS	647	671	688	717	731	763	759	809	858	908	952	977	1095	1118	1244
LB	207	218	235	264	266	298	293	343	374	424	442	468	534	557	667
LBS	275	299	316	345	359	391	387	437	486	536	580	605	723	746	872

01 043 01 14

R97..

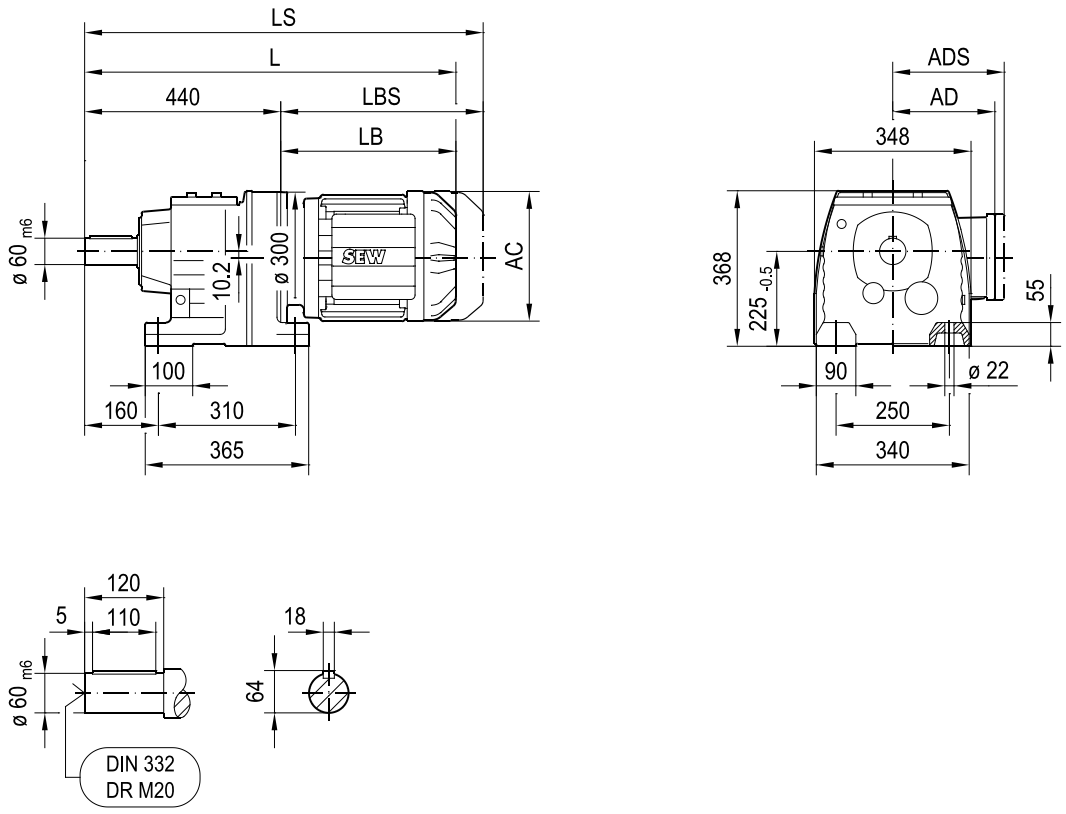

(→ 📖 4.1)	DRN														
	71M	80MK	80M	90S	90L	100LS	100L/LM	112M	132S	132M	132L	160..	180..	200L	225..
AC	139	156	156	179	179	197	197	221	221	261	261	314	357	394	434
AD	118	128	128	140	140	157	157	170	170	228	228	253	268	283	305
ADS	129	139	139	150	150	158	158	172	172	228	228	253	268	283	305
L	642	653	699	701	733	728	778	809	859	877	903	969	992	1102	1076
LS	710	734	780	794	826	822	872	921	971	1015	1040	1158	1181	1307	1281
LB	202	213	259	261	293	288	338	369	419	437	463	529	552	662	636
LBS	270	294	340	354	386	382	432	481	531	575	600	718	741	867	841

01 044 01 14

RF97..

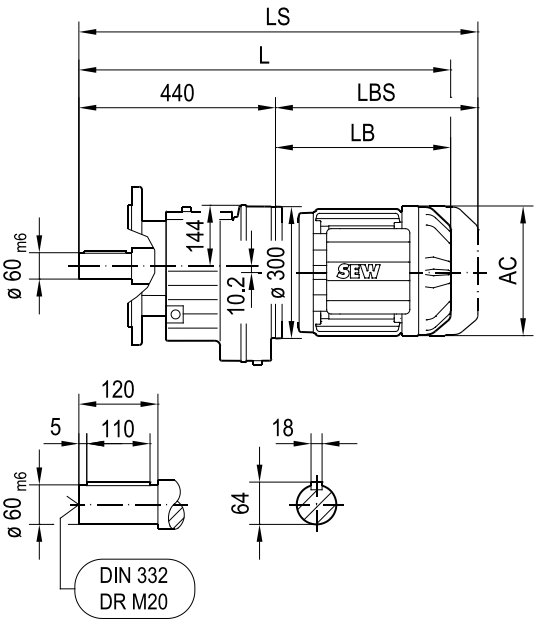

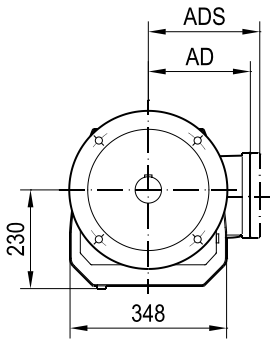

ø 350

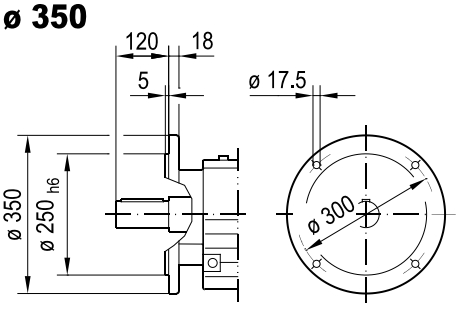

ø 450

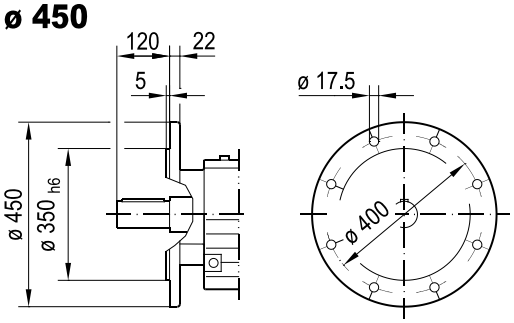

RM97..

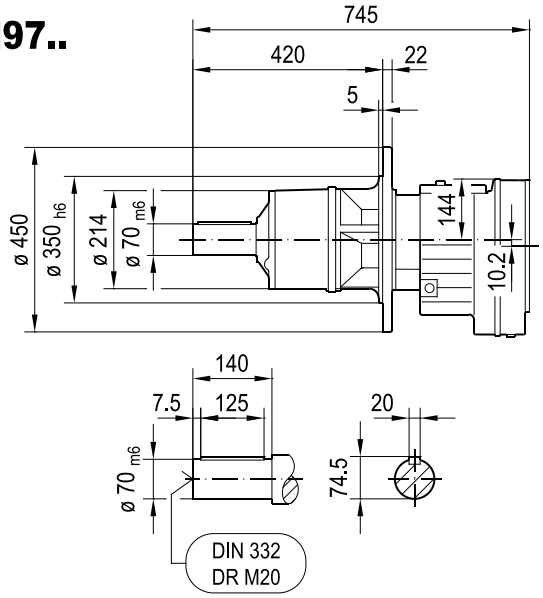

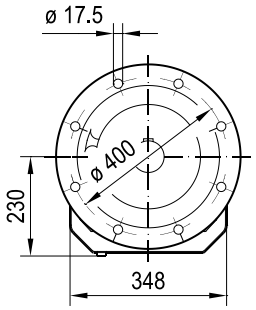

(→ 📖 4.1)	DRN														
	71M	80MK	80M	90S	90L	100LS	100L/LM	112M	132S	132M	132L	160..	180..	200L	225..
AC	139	156	156	179	179	197	197	221	221	261	261	314	357	394	434
AD	118	128	128	140	140	157	157	170	170	228	228	253	268	283	305
ADS	129	139	139	150	150	158	158	172	172	228	228	253	268	283	305
L	642	653	699	701	733	728	778	809	859	877	903	969	992	1102	1076
LS	710	734	780	794	826	822	872	921	971	1015	1040	1158	1181	1307	1281
LB	202	213	259	261	293	288	338	369	419	437	463	529	552	662	636
LBS	270	294	340	354	386	382	432	481	531	575	600	718	741	867	841

01 045 01 14

R107..

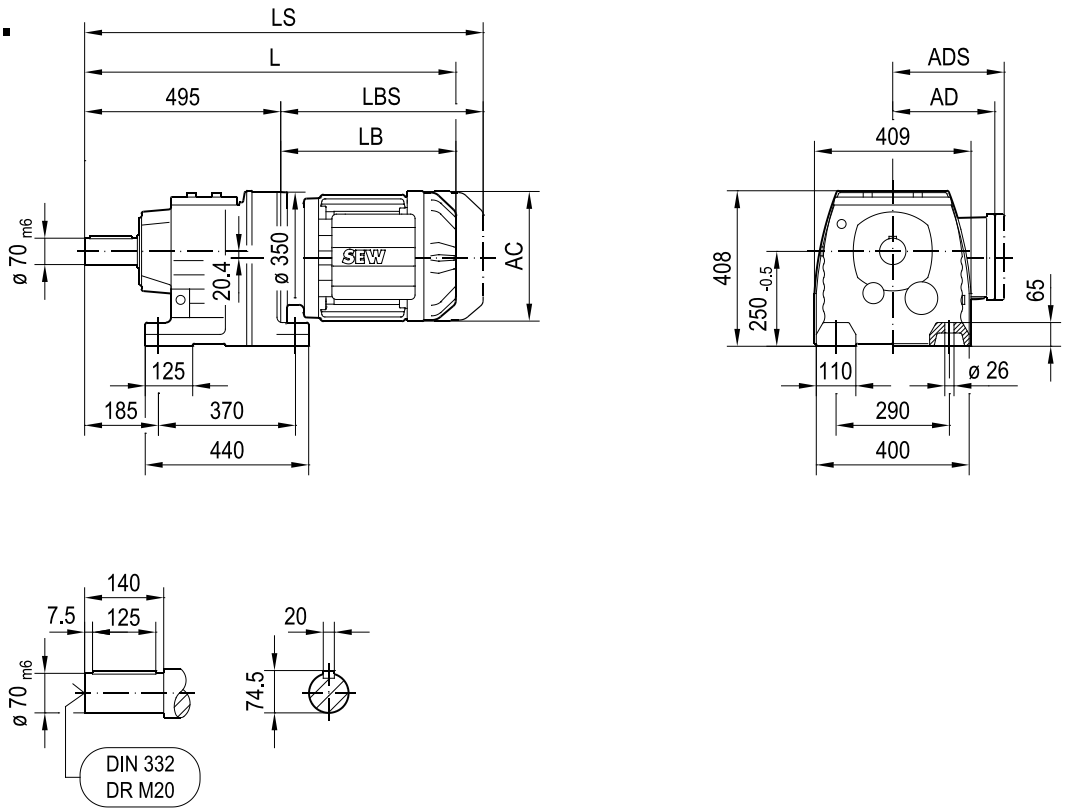

(→ 📖 4.1)	DRN									
	100LS	100L/LM	112M	132S	132M	132L	160..	180..	200L	225..
AC	197	197	221	221	261	261	314	357	394	434
AD	157	157	170	170	228	228	253	268	283	305
ADS	158	158	172	172	228	228	253	268	283	305
L	777	827	858	908	926	952	1018	1041	1151	1125
LS	871	921	970	1020	1064	1089	1207	1230	1356	1330
LB	282	332	363	413	431	457	523	546	656	630
LBS	376	426	475	525	569	594	712	735	861	835

01 046 01 14

RF107..

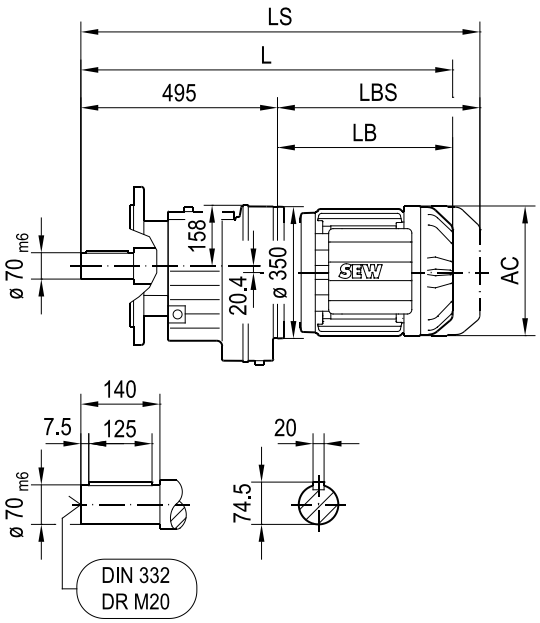

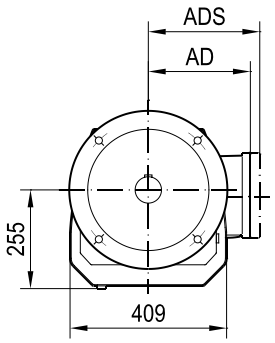

ø 350

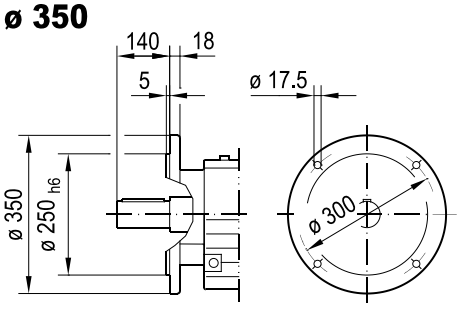

ø 450

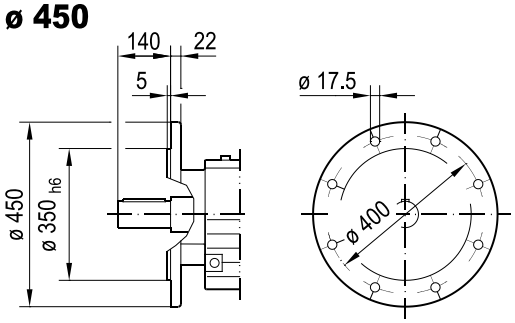

RM107..

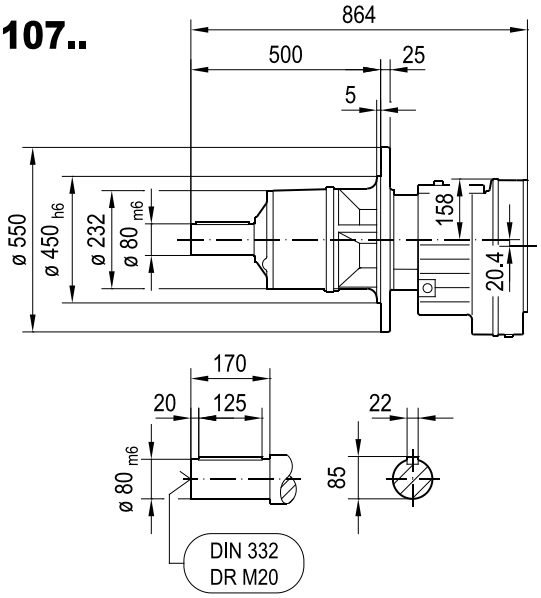

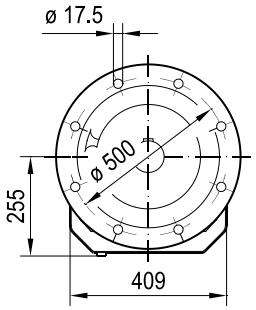

(→ 📖 4.1)	DRN									
	100LS	100L/LM	112M	132S	132M	132L	160..	180..	200L	225..
AC	197	197	221	221	261	261	314	357	394	434
AD	157	157	170	170	228	228	253	268	283	305
ADS	158	158	172	172	228	228	253	268	283	305
L	777	827	858	908	926	952	1018	1041	1151	1125
LS	871	921	970	1020	1064	1089	1207	1230	1356	1330
LB	282	332	363	413	431	457	523	546	656	630
LBS	376	426	475	525	569	594	712	735	861	835

01 147 01 15

R127..

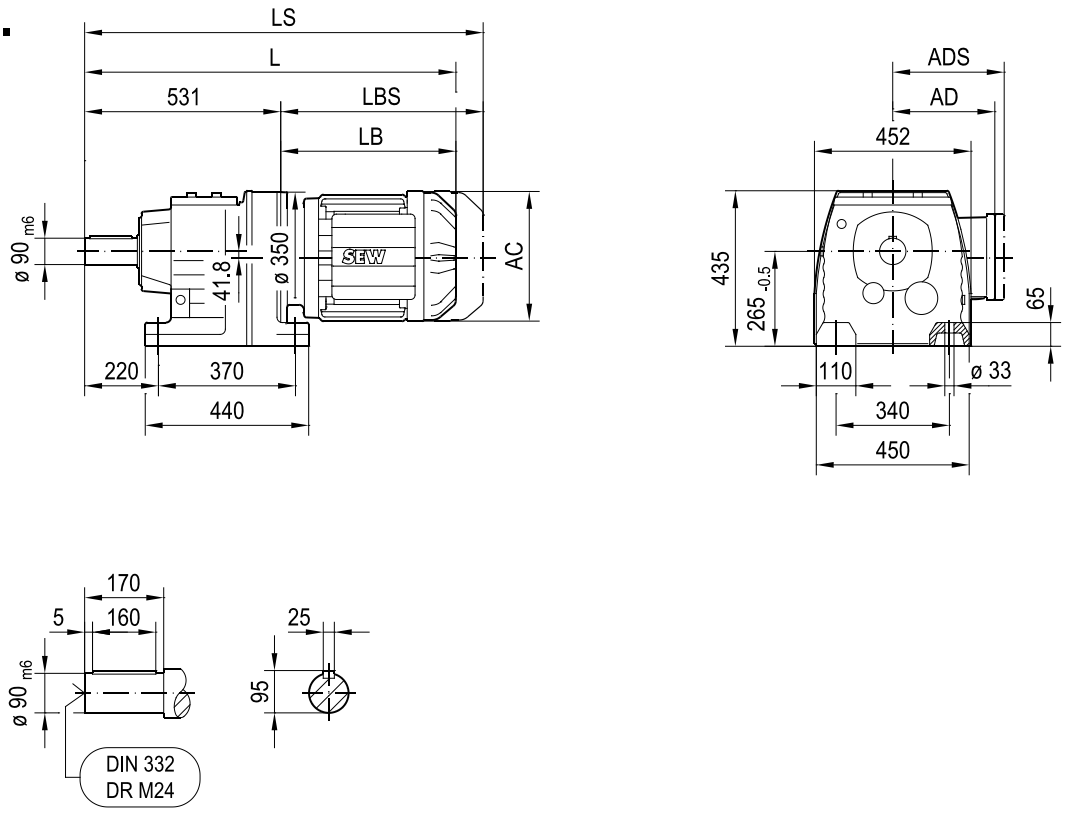

(→ 📖 4.1)	DRN										
	100LS	100L/LM	112M	132S	132M	132L	160..	180..	200L	225..	250M
AC	197	197	221	221	261	261	314	357	394	434	495
AD	157	157	170	170	228	228	253	268	283	305	394
ADS	158	158	172	172	228	228	253	268	283	305	394
L	813	863	894	944	962	988	1054	1077	1187	1161	1298
LS	907	957	1006	1056	1100	1125	1243	1266	1392	1366	1538
LB	282	332	363	413	431	457	523	546	656	630	767
LBS	376	426	475	525	569	594	712	735	861	835	1007

01 148 01 15

RF127..

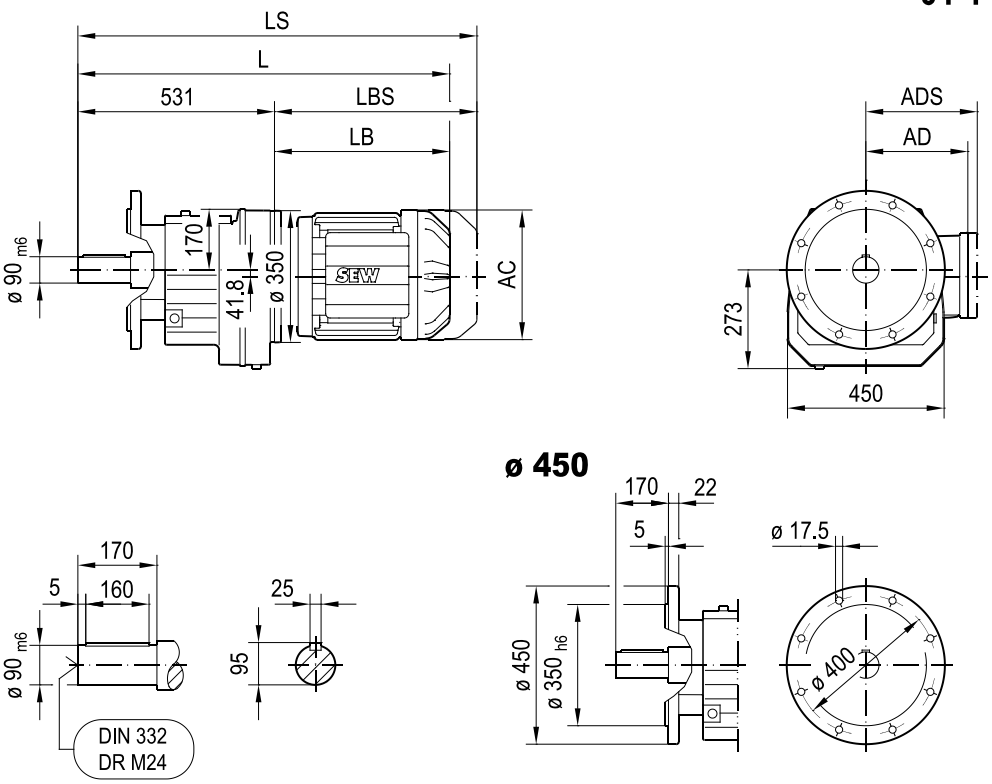

RM127..

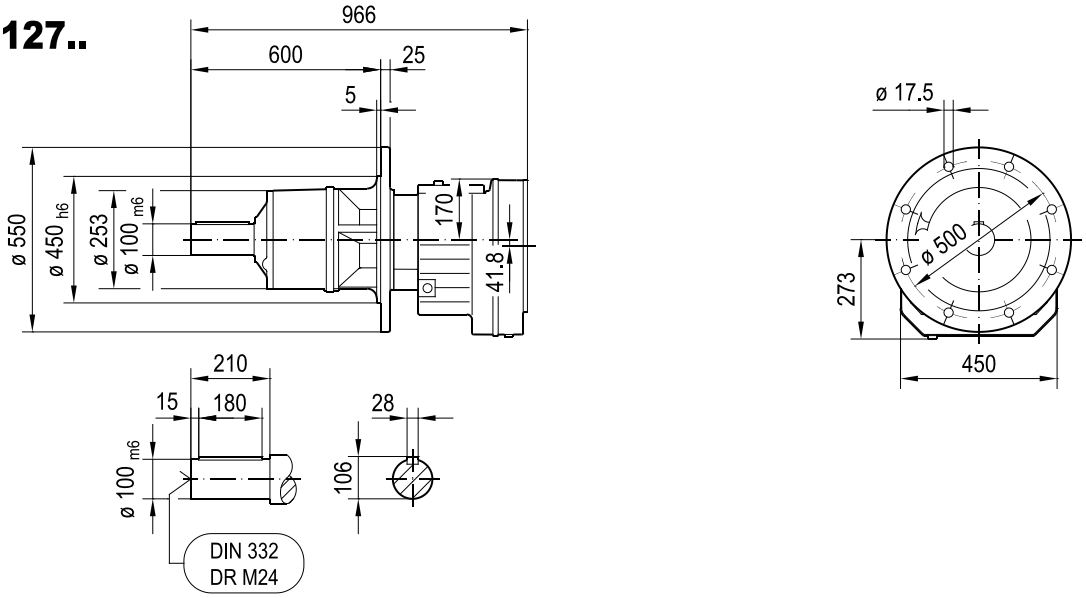

(→ 📖 4.1)	DRN										
	100LS	100L/LM	112M	132S	132M	132L	160..	180..	200L	225..	250M
AC	197	197	221	221	261	261	314	357	394	434	495
AD	157	157	170	170	228	228	253	268	283	305	394
ADS	158	158	172	172	228	228	253	268	283	305	394
L	813	863	894	944	962	988	1054	1077	1187	1161	1298
LS	907	957	1006	1056	1100	1125	1243	1266	1392	1366	1538
LB	282	332	363	413	431	457	523	546	656	630	767
LBS	376	426	475	525	569	594	712	735	861	835	1007

01 047 01 14

R137..

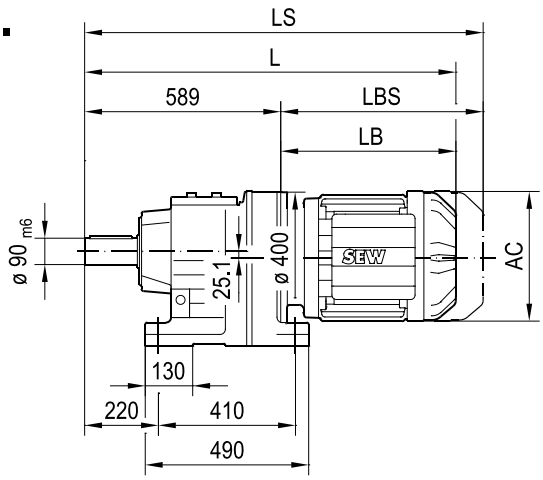

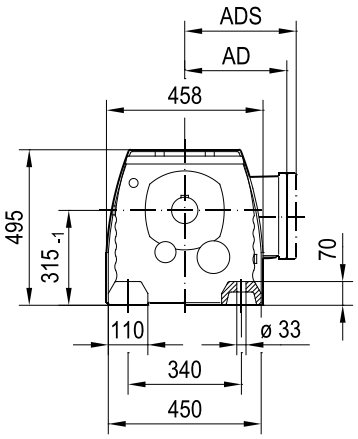

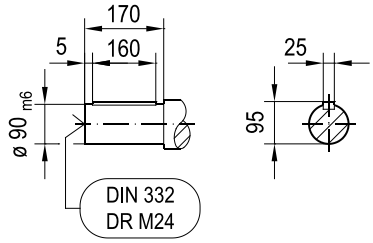

(→ 📖 4.1)	DRN									
	132S	132M	132L	160..	180..	200L	225..	250M	280S	280M
AC	221	261	261	314	357	394	434	495	495	495
AD	170	228	228	253	268	283	305	394	394	394
ADS	172	228	228	253	268	283	305	394	394	394
L	995	1013	1039	1105	1128	1238	1212	1349	1349	1444
LS	1107	1151	1176	1294	1317	1443	1417	1589	1589	1684
LB	406	424	450	516	539	649	623	760	760	855
LBS	518	562	587	705	728	854	828	1000	1000	1095

01 048 01 14

RF137..

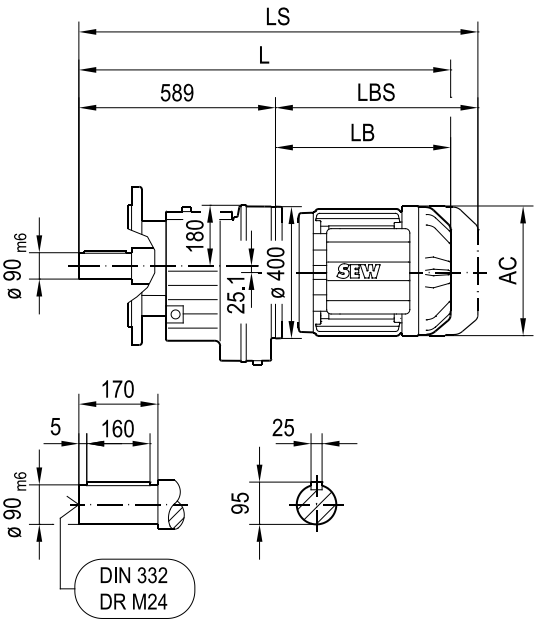

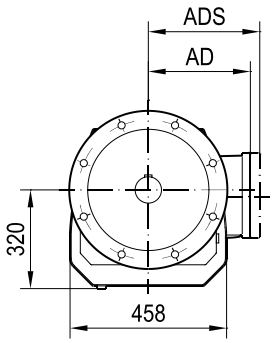

ø 450

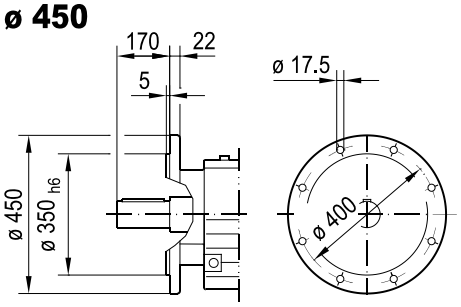

ø 550

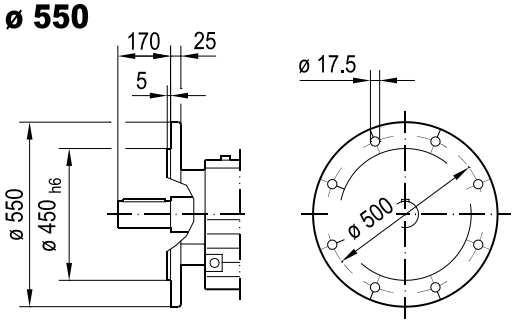

RM137..

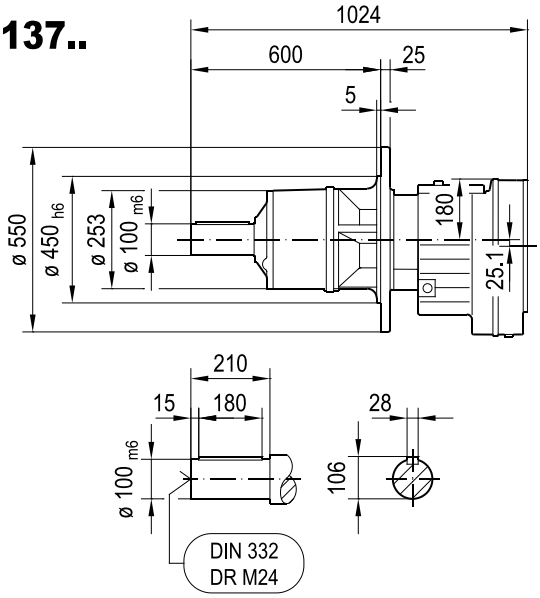

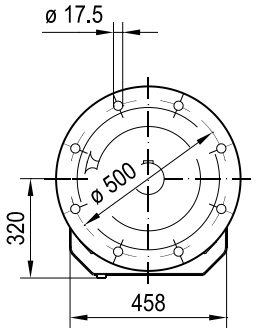

(→ 📖 4.1)	DRN									
	132S	132M	132L	160..	180..	200L	225..	250M	280S	280M
AC	221	261	261	314	357	394	434	495	495	495
AD	170	228	228	253	268	283	305	394	394	394
ADS	172	228	228	253	268	283	305	394	394	394
L	995	1013	1039	1105	1128	1238	1212	1349	1349	1444
LS	1107	1151	1176	1294	1317	1443	1417	1589	1589	1684
LB	406	424	450	516	539	649	623	760	760	855
LBS	518	562	587	705	728	854	828	1000	1000	1095

01 049 01 14

R147..

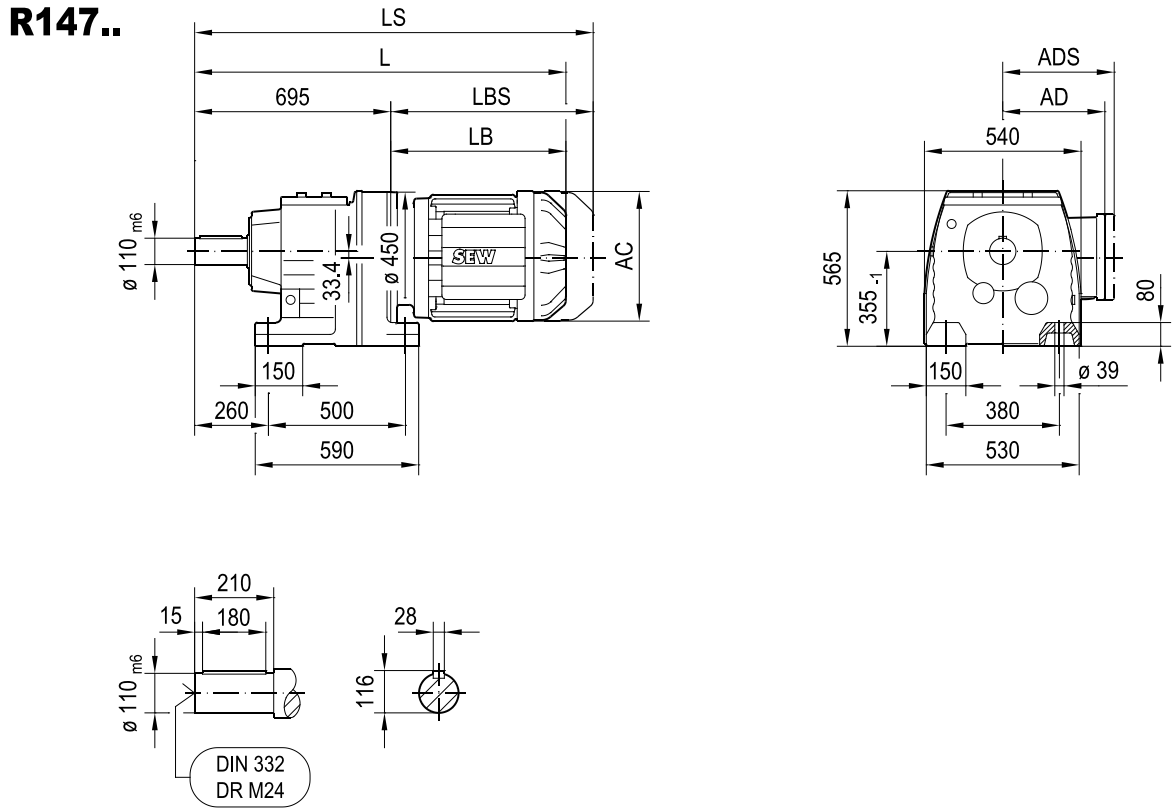

(→ 📖 4.1)	DRN							
	132L	**160..**	**180..**	**200L**	**225..**	**250M**	**280S**	**280M**
AC	261	314	357	394	434	495	495	495
AD	228	253	268	283	305	394	394	394
ADS	228	253	268	283	305	394	394	394
L	1137	1203	1226	1336	1310	1447	1447	1542
LS	1274	1392	1415	1541	1515	1687	1687	1782
LB	442	508	531	641	615	752	752	847
LBS	579	697	720	846	820	992	992	1087

01 050 01 14

RF147..

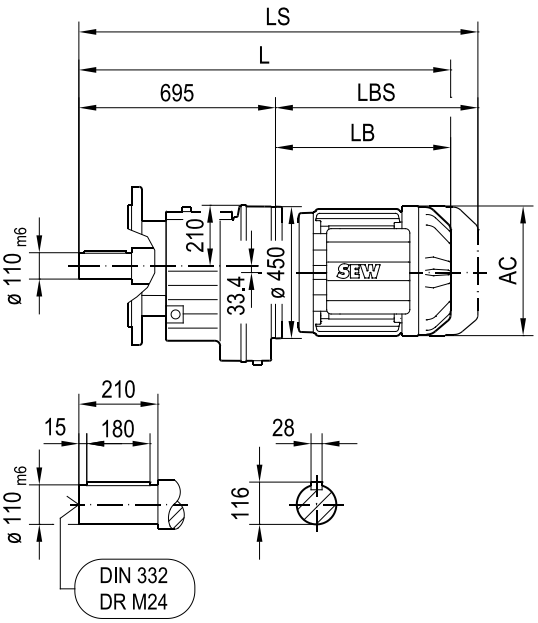

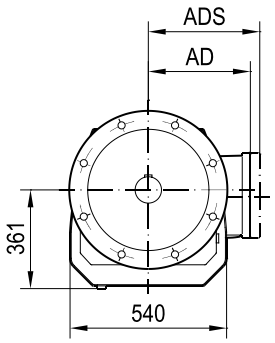

ø 450

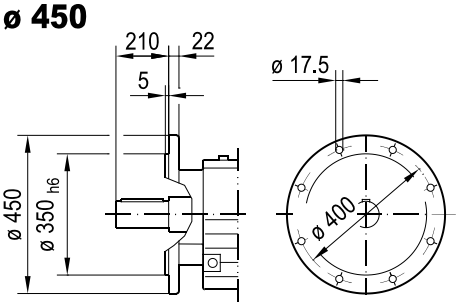

ø 550

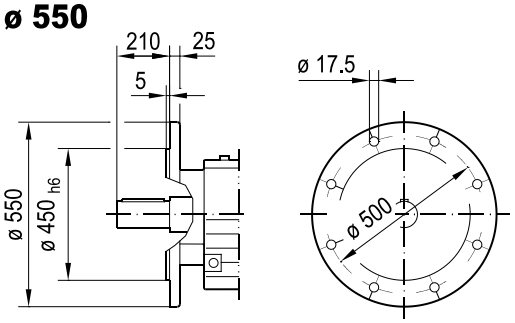

RM147..

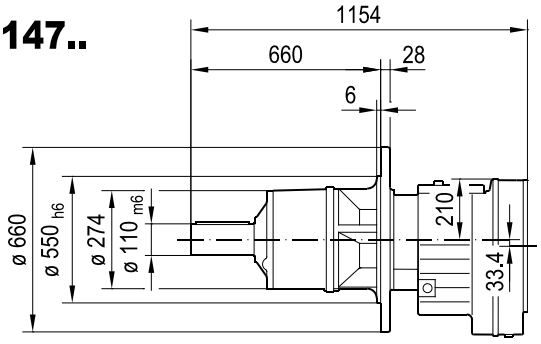

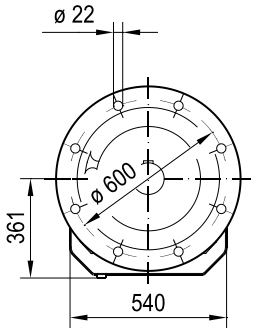

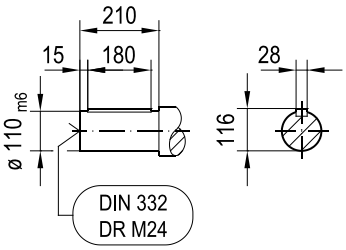

(→ 📖 4.1)	DRN							
	132L	160..	180..	200L	225..	250M	280S	280M
AC	261	314	357	394	434	495	495	495
AD	228	253	268	283	305	394	394	394
ADS	228	253	268	283	305	394	394	394
L	1137	1203	1226	1336	1310	1447	1447	1542
LS	1274	1392	1415	1541	1515	1687	1687	1782
LB	442	508	531	641	615	752	752	847
LBS	579	697	720	846	820	992	992	1087

01 051 01 14

R167..

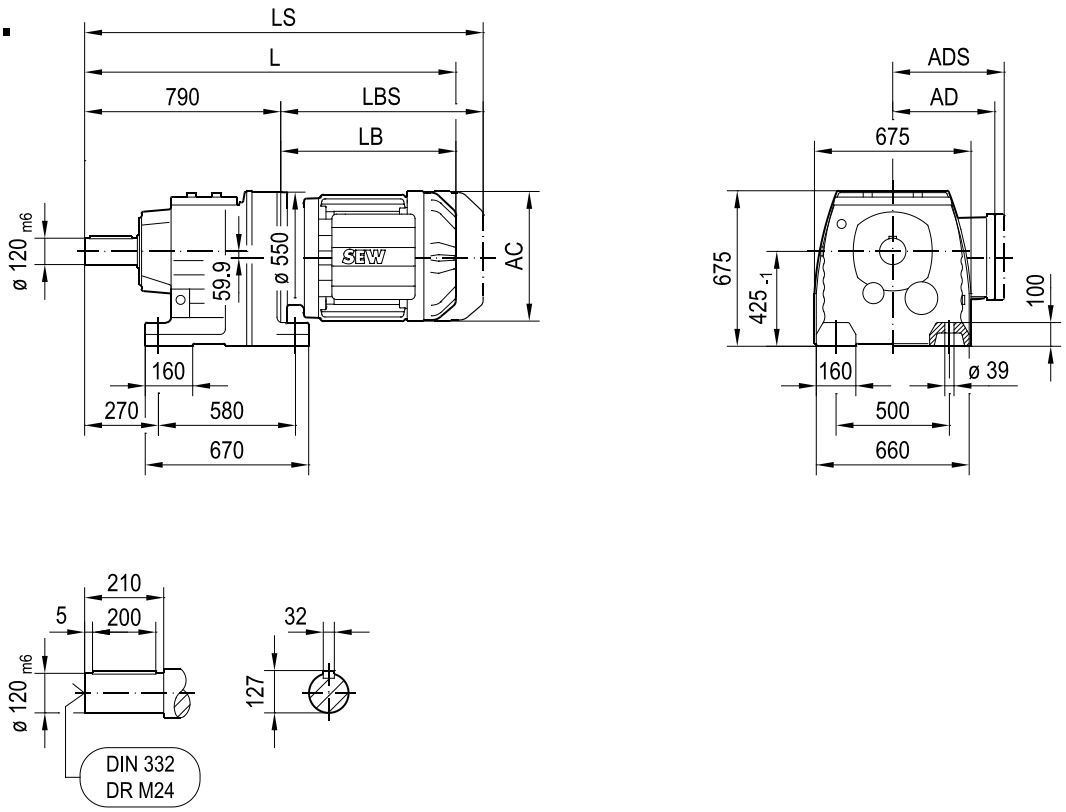

(→ 📖 4.1)	DRN									
	132L	160..	180..	200L	225..	250M	280S	280M	315S-M	315ME-H
AC	261	314	357	394	434	495	495	495	624	624
AD	228	253	268	283	305	394	394	394	506	506
ADS	228	253	268	283	305	394	394	394	506	506
L	1224	1290	1313	1423	1397	1534	1534	1629	1731	1861
LS	1361	1479	1502	1628	1602	1774	1774	1869	1982	2112
LB	434	500	523	633	607	744	744	839	941	1071
LBS	571	689	712	838	812	984	984	1079	1192	1322

01 052 01 14

RF167..

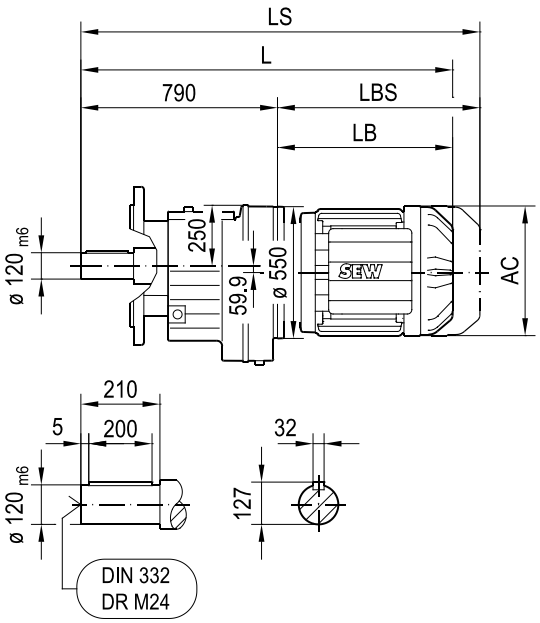

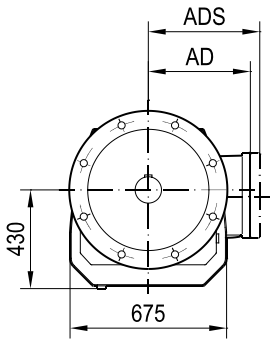

ø 550

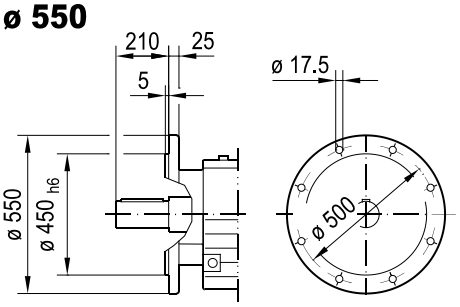

ø 660

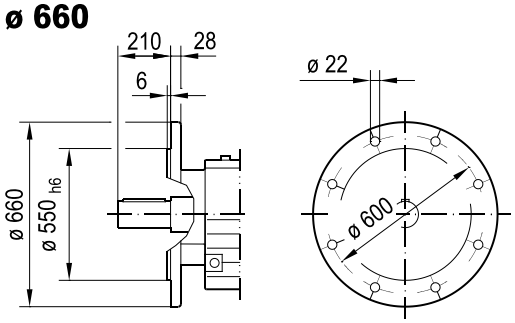

RM167..

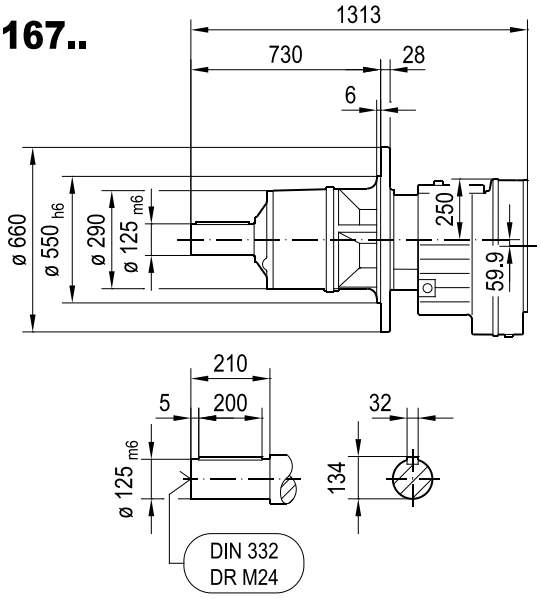

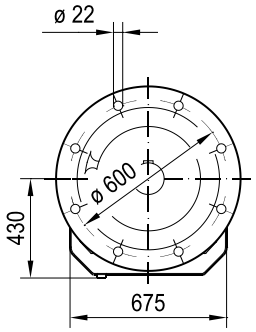

(→ 📖 4.1)	DRN									
	132L	160..	180..	200L	225..	250M	280S	280M	315S-M	315ME-H
AC	261	314	357	394	434	495	495	495	624	624
AD	228	253	268	283	305	394	394	394	506	506
ADS	228	253	268	283	305	394	394	394	506	506
L	1224	1290	1313	1423	1397	1534	1534	1629	1731	1861
LS	1361	1479	1502	1628	1602	1774	1774	1869	1982	2112
LB	434	500	523	633	607	744	744	839	941	1071
LBS	571	689	712	838	812	984	984	1079	1192	1322

4.2.5 Dimension sheets R..R..DRN..

01 066 01 21

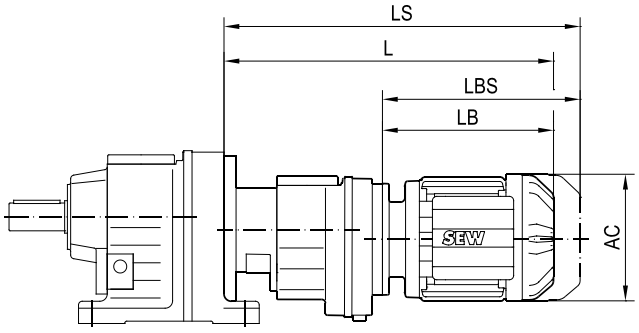

(→ 📖 4.1)	AC	L	LS	LB	LBS
R..27R17 DRN63MS	115	323	379	190	246
R..27R17 DRN63M	115	337	393	204	260
R..27R17 DRN71MS	139	339	406	206	273
R..27R17 DRN71M	139	359	426	226	293
R..37R17 DRN63MS	115	323	379	190	246
R..37R17 DRN63M	115	337	393	204	260
R..37R17 DRN71MS	139	339	406	206	273
R..37R17 DRN71M	139	359	426	226	293
R..37R17 DRN80MK	156	370	451	237	318
R..47R37 DRN63MS	115	355	411	190	246
R..47R37 DRN63M	115	369	425	204	260
R..47R37 DRN71MS	139	371	438	206	273
R..47R37 DRN71M	139	391	458	226	293
R..47R37 DRN80MK	156	402	483	237	318
R..47R37 DRN80M	156	448	529	283	364
R..57R37 DRN63MS	115	355	411	190	246
R..57R37 DRN63M	115	369	425	204	260
R..57R37 DRN71MS	139	371	438	206	273
R..57R37 DRN71M	139	391	458	226	293
R..57R37 DRN80MK	156	402	483	237	318
R..57R37 DRN80M	156	448	529	283	364
R..67R37 DRN63MS	115	355	411	190	246
R..67R37 DRN63M	115	369	425	204	260
R..67R37 DRN71MS	139	371	438	206	273
R..67R37 DRN71M	139	391	458	226	293
R..67R37 DRN80MK	156	402	483	237	318
R..67R37 DRN80M	156	448	529	283	364
R..67R37 DRN90S	179	449	543	284	378
R..77R37 DRN63M	115	361	417	204	260
R..77R37 DRN71MS	139	363	430	206	273
R..77R37 DRN71M	139	383	450	226	293
R..77R37 DRN80MK	156	394	475	237	318
R..77R37 DRN80M	156	440	521	283	364
R..77R37 DRN90S	179	441	535	284	378
R..77R37 DRN90L	179	473	567	316	410
R..87R57 DRN80MK	156	458	539	230	311
R..87R57 DRN80M	156	504	585	276	357
R..87R57 DRN90S	179	505	599	278	371
R..87R57 DRN90L	179	537	631	310	403
R..87R57 DRN100L/LM	197	583	676	355	449
R..97R57 DRN80MK	156	453	534	230	311
R..97R57 DRN80M	156	499	580	276	357
R..97R57 DRN90S	179	500	594	278	371
R..97R57 DRN90L	179	532	626	310	403
R..97R57 DRN100LS	197	528	621	305	399
R..97R57 DRN100L/LM	197	578	671	355	449

	AC	L	LS	LB	LBS
R..107R77 DRN100LS	197	545	639	298	392
R..107R77 DRN100L/LM	197	595	689	348	442
R..107R77 DRN112M	221	626	738	379	491
R..107R77 DRN132S	221	676	788	429	541
R..127R77 DRN100LS	197	545	639	298	392
R..127R77 DRN100L/LM	197	595	689	348	442
R..127R77 DRN112M	221	626	738	379	491
R..127R77 DRN132S	221	676	788	429	541
R..127R77 DRN132M	261	694	832	447	585
R..127R77 DRN132L	261	720	857	473	610
R..127R77 DRN160..	314	786	975	539	728
R..137R77 DRN132S	221	669	781	429	541
R..137R77 DRN132M	261	687	825	447	585
R..137R77 DRN132L	261	713	850	473	610
R..147R87 DRN132L	261	748	885	468	605
R..147R87 DRN160..	314	814	1003	534	723
R..147R87 DRN180..	357	837	1026	557	746
R..167R97 DRN132L	261	788	925	463	600
R..167R97 DRN160..	314	854	1043	529	718
R..167R107 DRN132L	261	839	976	457	594
R..167R107 DRN160..	314	905	1094	523	712
R..167R107 DRN180..	357	928	1117	546	735
R..167R107 DRN200L	394	1038	1243	656	861

4.3 F..DRN.. parallel-shaft helical gearmotors

4.3.1 Geometrically possible combinations F..DRN..

F27, n_e = 1400 min^{-1} **130 Nm**

n_a min^{-1}	M_{amax} Nm	F_{Ra} N	$\varphi_{(/R)}$	i	DRN 63M 63MS 71M 71MS 80MK 80MS	DRN 80M 90S	DRN 90L	DRN 100L 100LM 100LS
					3			
9.9	130	4500	-	140.74	✓			
10	130	4500	-	129.09	✓			
12	130	4500	-	109.90	✓	✓		
14	130	4500	-	94.76	✓	✓	✓	
15	130	4500	-	88.32	✓	✓	✓	
18	130	4500	-	77.21	✓	✓	✓	✓
19	130	4500	-	72.37	✓	✓	✓	
21	130	4400	-	63.86	✓	✓	✓	✓
24	130	4190	-	56.62	✓	✓	✓	✓
27	130	3980	-	50.19	✓	✓	✓	
29	130	3860	-	46.78	✓	✓	✓	
34	130	3640	-	40.89	✓	✓	✓	✓
36	130	3530	-	38.33	✓	✓	✓	
41	130	3340	-	33.83	✓	✓	✓	✓
					2			
47	130	3150	-	29.56	✓			
51	130	3030	-	27.18	✓			
60	130	2820	-	23.25	✓	✓		
69	130	2630	-	20.15	✓	✓	✓	
74	130	2550	-	18.84	✓	✓	✓	
85	130	2370	-	16.28	✓	✓	✓	✓
101	130	2180	-	13.84	✓	✓	✓	✓
113	130	2060	-	12.35	✓	✓	✓	✓
132	130	1900	-	10.55	✓	✓	✓	✓
141	130	1830	-	9.88	✓	✓	✓	✓
148	130	1660	-	9.40	✓	✓	✓	
172	123	1590	-	8.13	✓	✓	✓	✓
202	114	1530	-	6.91	✓	✓	✓	✓
226	109	1480	-	6.17	✓	✓	✓	✓
265	100	1440	-	5.27	✓	✓	✓	✓
283	96	1420	-	4.93	✓	✓	✓	✓
336	87	1380	-	4.16	✓	✓	✓	✓

F27R17, n_e = 1400 min^{-1} **130 Nm**

n_a min^{-1}	M_{amax} Nm	F_{Ra} N	$\varphi_{(/R)}$	i	DRN 63M 63MS 71M 71MS 80MK 80MS	DRN 80M
					3 3	
0.15	130	4500	-	8972	✓	✓
0.18	130	4500	-	7736	✓	✓
0.19	130	4500	-	7211	✓	✓
0.22	130	4500	-	6303	✓	✓
0.25	130	4500	-	5435	✓	✓
0.28	130	4500	-	4855	✓	✓
0.32	130	4500	-	4243	✓	✓
0.37	130	4500	-	3715	✓	✓
0.43	130	4500	-	3247	✓	✓
0.48	130	4500	-	2878	✓	✓
0.55	130	4500	-	2515	✓	✓
0.63	130	4500	-	2217	✓	✓
					2 3	
0.73	130	4500	-	1898	✓	✓
0.85	130	4500	-	1645	✓	✓
0.91	130	4500	-	1525	✓	✓
1	130	4500	-	1322	✓	✓
1.2	130	4500	-	1146	✓	✓
1.3	130	4500	-	1013	✓	✓
1.5	130	4500	-	890	✓	✓
1.7	130	4500	-	778	✓	✓
2	130	4500	-	682	✓	✓
2.3	130	4500	-	602	✓	✓
2.6	130	4500	-	520	✓	✓
					3 2	
0.71	130	4500	-	1948	✓	
0.76	130	4500	-	1826	✓	
0.86	130	4500	-	1610	✓	✓
1	130	4500	-	1399	✓	✓
1.1	130	4500	-	1230	✓	✓
1.4	130	4500	-	948	✓	✓
1.6	130	4500	-	829	✓	✓
1.9	130	4500	-	731	✓	✓
2.2	130	4500	-	633	✓	✓
2.5	130	4500	-	551	✓	✓
2.8	130	4500	-	489	✓	✓
3.2	130	4500	-	427	✓	✓
3.6	130	4500	-	379	✓	✓
4.2	130	4500	-	326	✓	✓
4.8	130	4500	-	288	✓	✓
5.5	130	4500	-	251	✓	✓
6.3	130	4500	-	221	✓	✓
8.1	130	4500	-	172	✓	✓
9.1	130	4500	-	153	✓	✓
10	130	4500	-	130	✓	✓
					2 2	
3	130	4500	-	458	✓	✓

F27R17, n_e = 1400 min^{-1} — **130 Nm**

n_a min^{-1}	M_{amax} Nm	F_{Ra} N	$\varphi_{(/R)}$	i	DRN 63M 63MS 71M 71MS 80MK 80MS	DRN 80M
3.5	130	4500	-	397	✓	✓
4	130	4500	-	342	✓	✓
4.6	130	4500	-	302	✓	✓
5.2	130	4500	-	266	✓	✓
5.9	130	4500	-	236	✓	✓
6.6	130	4500	-	211	✓	✓
7.5	130	4500	-	186	✓	✓
9.8	130	4500	-	142	✓	✓
11	130	4500	-	124	✓	✓
12	130	4500	-	109	✓	✓
14	130	4500	-	96	✓	✓

F37, n_e = 1400 min^{-1} — **230 Nm**

n_a min^{-1}	M_{amax} Nm	F_{Ra} N	$\varphi_{(/R)}$	i	DRN 63M 63MS 71M 71MS 80MK 80MS	DRN 80M 90S	DRN 90L	DRN 100L 100LM 100LS
					 3			
10	230	3810	7	128.51	✓			
11	230	3810	7	117.88	✓			
13	230	3810	7	100.36	✓	✓		
16	230	3810	7	86.53	✓	✓	✓	
17	230	3810	7	80.65	✓	✓	✓	
19	230	3810	7	70.50	✓	✓	✓	✓
21	230	3810	7	66.09	✓	✓	✓	
24	230	3810	7	58.32	✓	✓	✓	✓
25	230	3810	8	54.54	✓	✓		
27	230	3810	7	51.70	✓	✓	✓	✓
29	230	3810	8	47.02	✓	✓	✓	
31	230	3810	8	43.83	✓	✓	✓	
36	230	3810	8	38.31	✓	✓	✓	✓
38	230	3810	8	35.91	✓	✓	✓	
44	230	3810	8	31.69	✓	✓	✓	✓
49	230	3810	8	28.09	✓	✓	✓	✓
58	230	3510	8	23.88	✓	✓	✓	✓
					 2			
59	230	3500	6	23.63	✓	✓		
68	230	3250	6	20.57	✓	✓	✓	
72	230	3140	6	19.27	✓	✓	✓	
82	230	2940	6	17.03	✓	✓	✓	✓
88	220	2900	6	15.81	✓	✓	✓	
97	215	2790	7	14.33	✓	✓	✓	✓
108	205	2710	7	12.87	✓	✓	✓	✓
126	190	2620	7	11.08	✓	✓	✓	✓
134	185	2580	7	10.42	✓	✓	✓	✓
156	175	2460	7	8.97	✓	✓	✓	✓

F37, n_e = 1400 min^{-1} — **230 Nm**

n_a min^{-1}	M_{amax} Nm	F_{Ra} N	$\varphi_{(/R)}$	i	DRN 63M 63MS 71M 71MS 80MK 80MS	DRN 80M 90S	DRN 90L	DRN 100L 100LM 100LS
174	170	2360	7	8.01	✓	✓	✓	✓
188	145	2350	10	7.44	✓	✓	✓	
207	140	2270	10	6.74	✓	✓	✓	✓
231	135	2190	10	6.05	✓	✓	✓	✓
268	125	2120	10	5.21	✓	✓	✓	✓
285	120	2100	11	4.90	✓	✓	✓	✓
331	110	2030	11	4.22	✓	✓	✓	✓
371	105	1970	12	3.77	✓	✓	✓	✓

F37R17, n_e = 1400 min^{-1} — **230 Nm**

n_a min^{-1}	M_{amax} Nm	F_{Ra} N	$\varphi_{(/R)}$	i	DRN 63M 63MS 71M 71MS 80MK 80MS	DRN 80M
					3 3	
0.17	230	3810	7	8193	✓	✓
0.19	230	3810	7	7064	✓	✓
0.21	230	3810	7	6585	✓	✓
0.24	230	3810	7	5756	✓	✓
0.28	230	3810	7	4963	✓	✓
0.31	230	3810	7	4434	✓	✓
0.36	230	3810	7	3875	✓	✓
0.41	230	3810	7	3392	✓	✓
0.47	230	3810	7	2965	✓	✓
0.54	230	3810	8	2587	✓	✓
0.61	230	3810	7	2284	✓	✓
0.7	230	3810	7	1997	✓	✓
0.8	230	3810	8	1742	✓	✓
0.9	230	3810	8	1545	✓	✓
					2 3	
0.72	230	3810	7	1929	✓	✓
0.83	230	3810	7	1679	✓	✓
0.9	230	3810	7	1550	✓	✓
1	230	3810	8	1356	✓	✓
1.1	230	3810	7	1180	✓	✓
1.3	230	3810	7	1044	✓	✓
1.5	230	3810	8	914	✓	✓
1.7	230	3810	8	808	✓	✓
2	220	3980	8	698	✓	✓
2.2	230	3810	8	616	✓	✓
2.5	230	3810	8	544	✓	✓
3	205	4220	9	466	✓	✓
3.4	205	4220	9	411	✓	✓
3.8	205	4220	9	364	✓	✓
					3 2	
1	230	3810	7	1370	✓	✓

F37R17, n_e = 1400 min^{-1} — **230 Nm**

n_a min^{-1}	M_{amax} Nm	F_{Ra} N	$\varphi_{(/R)}$	i	DRN 63M 63MS 71M 71MS 80MK 80MS	DRN 80M
1.1	230	3810	7	1198	✓	✓
1.3	230	3810	7	1047	✓	✓
1.5	230	3810	7	915	✓	✓
1.7	230	3810	7	807	✓	✓
1.9	230	3810	7	707	✓	✓
2.2	230	3810	7	617	✓	✓
2.6	230	3810	8	538	✓	✓
2.9	230	3810	8	477	✓	✓
3.3	230	3810	8	412	✓	✓
3.8	230	3810	8	365	✓	✓
4.3	230	3810	9	322	✓	✓
5	230	3810	8	278	✓	✓
5.7	230	3810	9	242	✓	✓
6.3	230	3810	9	221	✓	✓
7.1	230	3810	9	195	✓	✓
8.3	230	3810	9	168	✓	✓
9.5	230	3810	9	147	✓	✓
11	230	3810	9	127	✓	✓
11	230	3810	9	121	✓	✓
12	230	3810	9	108	✓	✓
15	230	3810	9	91	✓	✓
					 2 2	
4.2	230	3810	7	326	✓	✓
4.9	230	3810	7	285	✓	✓
5.6	230	3810	8	250	✓	✓
6.3	220	3980	8	219	✓	✓
7.5	215	4070	8	186	✓	✓
8.3	205	4220	9	167	✓	✓
9.6	230	3810	8	145	✓	✓
10	230	3810	8	129	✓	✓
11	230	3810	8	118	✓	✓
14	230	3810	8	98	✓	✓
16	230	3810	8	87	✓	✓

F47, n_e = 1400 min^{-1} — **450 Nm**

n_a min^{-1}	M_{amax} Nm	F_{Ra} N	$\varphi_{(/R)}$	i	DRN 63M 63MS 71M 71MS 80MK 80MS	DRN 80M 90S	DRN 90L	DRN 100L 100LM 100LS
					 3			
7.3	450	8590	6	190.76	✓			
7.9	450	8590	6	175.38	✓			
9.3	450	8590	6	150.06	✓	✓		
10	450	8590	6	130.07	✓	✓	✓	
11	450	8590	6	121.57	✓	✓	✓	
13	450	8590	6	105.09	✓	✓	✓	✓

F47, n_e = 1400 min^{-1} — **450 Nm**

n_a min^{-1}	M_{amax} Nm	F_{Ra} N	$\varphi_{(/R)}$	i	DRN 63M 63MS 71M 71MS 80MK 80MS	DRN 80M 90S	DRN 90L	DRN 100L 100LM 100LS
15	450	8590	6	89.29	✓	✓	✓	✓
17	450	8590	6	79.72	✓	✓	✓	✓
20	450	8010	6	68.09	✓	✓	✓	✓
21	450	7860	7	65.36	✓	✓	✓	
24	450	7340	7	56.49	✓	✓	✓	✓
29	450	6800	7	48.00*	✓	✓	✓	✓
32	450	6440	7	42.86	✓	✓	✓	✓
38	450	5950	7	36.61	✓	✓	✓	✓
40	450	5760	7	34.29	✓	✓	✓	✓
48	450	5280	7	28.88	✓	✓	✓	✓
					 2			
45	450	5460	6	30.86	✓	✓	✓	
47	450	5320	6	29.32	✓	✓	✓	
54	450	4960	6	25.72	✓	✓	✓	✓
64	450	4540	6	21.82	✓	✓	✓	✓
71	450	4290	6	19.70	✓	✓	✓	✓
80	450	3980	6	17.33	✓	✓	✓	✓
85	450	3850	6	16.36	✓	✓	✓	✓
100	450	3500	6	13.93	✓	✓	✓	✓
110	450	3290	6	12.66	✓	✓	✓	✓
127	450	3000	6	10.97	✓	✓	✓	✓
156	330	3150	8	8.96	✓	✓	✓	✓
177	380	2550	8	7.88	✓	✓	✓	✓
188	380	2450	8	7.44*	✓	✓	✓	✓
220	350	2390	8	6.34	✓	✓	✓	✓
243	340	2310	9	5.76	✓	✓	✓	✓
280	320	2230	9	4.99	✓	✓	✓	✓

F47R17, n_e = 1400 min^{-1} — **450 Nm**

n_a min^{-1}	M_{amax} Nm	F_{Ra} N	$\varphi_{(/R)}$	i	DRN 63M 63MS 71M 71MS 80MK 80MS	DRN 80M
					 3 3	
0.11	450	8590	6	12251	✓	✓
0.13	450	8590	6	10619	✓	✓
0.14	450	8590	6	9846	✓	✓
0.16	450	8590	6	8534	✓	✓
0.18	450	8590	6	7460	✓	✓
0.21	450	8590	6	6536	✓	✓
0.24	450	8590	6	5746	✓	✓
0.27	450	8590	6	5022	✓	✓
0.31	450	8590	6	4401	✓	✓
0.36	450	8590	6	3883	✓	✓
0.4	450	8590	6	3443	✓	✓
0.47	450	8590	6	2976	✓	✓

F47R17, n_e = 1400 min^{-1} **450 Nm**

n_a min^{-1}	M_{amax} Nm	F_{Ra} N	$\varphi_{(/R)}$	i	DRN 63M 63MS 71M 71MS 80MK 80MS	DRN 80M
0.53	450	8590	7	2629	✓	✓
0.6	450	8590	7	2304	✓	✓
0.68	450	8590	7	2033	✓	✓
					2 3	
0.55	450	8590	7	2519	✓	✓
0.58	450	8590	7	2394	✓	✓
0.64	450	8590	7	2172	✓	✓
0.69	450	8590	7	2025	✓	✓
0.79	450	8590	7	1770	✓	✓
0.88	450	8590	7	1576	✓	✓
1	450	8590	7	1363	✓	✓
1.1	450	8590	7	1192	✓	✓
1.3	450	8590	7	1061	✓	✓
1.5	450	8590	7	931	✓	✓
1.7	450	8590	7	822	✓	✓
1.9	450	8590	7	706	✓	✓
2.2	450	8590	7	619	✓	✓
					3 2	
0.78	450	8590	6	1785	✓	✓
0.88	450	8590	6	1578	✓	✓
1	450	8590	6	1364	✓	✓
1.1	450	8590	6	1203	✓	✓
1.3	450	8590	6	1049	✓	✓
1.5	450	8590	6	918	✓	✓
1.7	450	8590	7	809	✓	✓
2	450	8590	6	700	✓	✓
2.2	450	8590	8	622	✓	✓
2.5	450	8590	8	543	✓	✓
2.9	450	8590	8	475	✓	✓
3.3	450	8590	8	419	✓	✓
3.7	450	8590	7	370	✓	✓
4.3	450	8590	8	324	✓	✓
4.8	450	8590	7	288	✓	✓
5.6	450	8590	8	249	✓	✓
6.4	450	8590	8	218	✓	✓
7.2	450	8590	8	193	✓	✓
8	450	8590	8	175	✓	✓
9.5	450	8590	8	147	✓	✓
10	450	8590	8	130	✓	✓
					2 2	
2.6	450	8590	7	524	✓	✓
2.8	450	8590	7	489	✓	✓
3.2	450	8590	7	427	✓	✓
3.6	450	8590	7	381	✓	✓
4.1	450	8590	7	334	✓	✓
4.7	450	8590	7	295	✓	✓
5.5	450	8590	7	253	✓	✓
6.4	450	8590	7	217	✓	✓
7.3	450	8590	7	190	✓	✓

F47R17, n_e = 1400 min^{-1} — **450 Nm**

n_a min^{-1}	M_{amax} Nm	F_{Ra} N	$\varphi_{(/R)}$	i	DRN 63M 63MS 71M 71MS 80MK 80MS	DRN 80M
7.8	450	8590	7	178	✓	✓
9.3	450	8590	7	149	✓	✓
10	450	8590	7	131	✓	✓

F57, n_e = 1400 min^{-1} — **630 Nm**

n_a min^{-1}	M_{amax} Nm	F_{Ra} N	$\varphi_{(/R)}$	i	DRN 63M 63MS 71M 71MS 80MK 80MS	DRN 80M 90S	DRN 90L	DRN 100L 100LM 100LS	DRN 112M	DRN 132M 132S
						3				
7	630	8180	6	199.70	✓					
7.6	630	8180	6	183.60	✓					
8.9	630	8180	6	157.09	✓	✓				
10	630	8180	6	136.16	✓	✓	✓			
11	630	8180	6	127.27	✓	✓	✓			
12	630	8180	6	110.01	✓	✓	✓	✓		
14	630	8180	6	93.47	✓	✓	✓	✓	✓	
16	630	8180	6	83.46	✓	✓	✓	✓	✓	
19	630	8180	6	72.98	✓	✓	✓			
20	630	8180	6	68.22	✓	✓	✓			
23	630	8180	7	58.97	✓	✓	✓	✓		
27	630	8180	7	50.10	✓	✓	✓	✓	✓	
31	630	8180	7	44.73	✓	✓	✓	✓	✓	
36	630	8180	7	38.21	✓	✓	✓	✓	✓	✓
39	630	8070	7	35.79	✓	✓	✓	✓	✓	✓
46	590	7650	7	30.15	✓	✓	✓	✓	✓	✓
						2				
34	290	10500	6	40.13	✓					
40	500	8670	6	34.24	✓	✓				
46	545	7890	6	29.94	✓	✓	✓			
49	535	7760	6	28.45	✓	✓	✓			
56	575	7060	6	24.96	✓	✓	✓	✓		
66	630	6180	6	21.17	✓	✓	✓	✓	✓	
73	630	5840	6	19.11	✓	✓	✓	✓	✓	
83	630	5440	6	16.81	✓	✓	✓	✓	✓	✓
88	630	5270	6	15.88	✓	✓	✓	✓	✓	✓
103	630	4800	6	13.52	✓	✓	✓	✓	✓	✓
113	630	4530	6	12.29	✓	✓	✓	✓	✓	✓
131	630	4140	6	10.64	✓	✓	✓	✓	✓	✓
150	420	4760	8	9.31	✓	✓	✓	✓	✓	
170	420	4450	8	8.19	✓	✓	✓	✓	✓	✓
181	420	4310	8	7.73	✓	✓	✓	✓	✓	✓
212	420	3940	8	6.58	✓	✓	✓	✓	✓	✓
234	420	3730	9	5.98	✓	✓	✓	✓	✓	✓
270	415	3460	9	5.18	✓	✓	✓	✓	✓	✓

F57R37, n_e = 1400 min^{-1} **630 Nm**

n_a min^{-1}	M_{amax} Nm	F_{Ra} N	$\varphi_{(/R)}$	i	DRN 63M 63MS 71M 71MS 80MK 80MS	DRN 80M 90S	DRN 90L	DRN 100L 100LM 100LS
					3 3			
0.09	630	8180	6	14832	✓			
0.1	630	8180	6	13604	✓			
0.11	630	8180	6	12602	✓			
0.12	630	8180	6	11252	✓			
0.14	630	8180	6	9986	✓	✓	✓	
0.15	630	8180	6	8787	✓	✓		
0.17	630	8180	6	7908	✓	✓	✓	
0.2	630	8180	6	6913	✓	✓	✓	✓
0.23	630	8180	7	6030	✓			
0.26	630	8180	6	5289	✓	✓	✓	
0.3	630	8180	6	4654	✓	✓		
0.34	630	8180	7	4060	✓	✓	✓	
0.39	630	8180	6	3564	✓	✓	✓	✓
0.44	630	8180	6	3161	✓	✓	✓	✓
0.51	630	8180	7	2737	✓	✓	✓	✓
0.58	630	8180	7	2409	✓	✓	✓	
0.65	630	8180	7	2131	✓	✓		
0.76	630	8180	7	1840	✓	✓	✓	
0.86	630	8180	7	1623	✓	✓	✓	✓
0.97	630	8180	7	1439	✓	✓	✓	✓
1.1	630	8180	7	1238	✓	✓	✓	✓
					2 3			
0.49	630	8180	7	2854	✓			
0.54	630	8180	7	2576	✓			
0.61	630	8180	7	2266	✓			
0.69	630	8180	7	2012	✓	✓		
0.78	630	8180	7	1791	✓	✓	✓	
0.86	630	8180	7	1617	✓	✓	✓	
0.98	630	8180	7	1422	✓	✓	✓	
1.1	630	8180	7	1243	✓	✓	✓	✓
1.3	630	8180	7	1066	✓	✓		
1.4	630	8180	7	949	✓	✓	✓	
1.6	630	8180	7	856	✓	✓	✓	
1.8	630	8180	7	749	✓	✓	✓	✓
2.1	630	8180	7	658	✓	✓	✓	✓
2.5	630	8180	7	549	✓	✓	✓	✓
2.8	630	8180	7	483	✓	✓	✓	✓
					3 2			
1.2	630	8180	6	1106	✓	✓	✓	✓
1.4	630	8180	7	967	✓	✓	✓	
1.6	630	8180	7	851	✓	✓		
1.8	630	8180	7	738	✓	✓	✓	
2.1	630	8180	7	646	✓	✓	✓	
2.5	630	8180	7	558	✓	✓	✓	✓
2.7	630	8180	7	506	✓	✓	✓	✓
3	630	8180	7	452	✓	✓	✓	✓
3.6	630	8180	7	386	✓	✓	✓	✓
4.1	630	8180	7	338	✓	✓	✓	✓

F57R37, n_e = 1400 min^{-1} — **630 Nm**

n_a min^{-1}	M_{amax} Nm	F_{Ra} N	$\varphi_{(/R)}$	i	DRN 63M 63MS 71M 71MS 80MK 80MS	DRN 80M 90S	DRN 90L	DRN 100L 100LM 100LS
5.4	630	8180	7	255	✓	✓	✓	✓
6.9	630	8180	7	201	✓	✓	✓	✓
7.7	630	8180	7	181	✓	✓	✓	✓
9	630	8180	7	155	✓	✓	✓	✓
					2	2		
3.2	630	8180	7	426	✓	✓		
3.6	630	8180	7	382	✓	✓	✓	
4.2	630	8180	7	330	✓	✓	✓	✓
4.6	630	8180	7	298	✓	✓	✓	✓
5.3	630	8180	7	262	✓	✓	✓	✓
6.1	630	8180	7	226	✓	✓	✓	✓
7	630	8180	7	200	✓	✓	✓	✓
8.2	630	8180	7	170	✓	✓	✓	✓
9.2	630	8180	7	152	✓	✓	✓	✓
10	630	8180	7	134	✓	✓	✓	✓

F67, n_e = 1400 min^{-1} — **870 Nm**

n_a min^{-1}	M_{amax} Nm	F_{Ra} N	$\varphi_{(/R)}$	i	DRN 63M 63MS 71M 71MS 80MK 80MS	DRN 80M 90S	DRN 90L	DRN 100L 100LM 100LS	DRN 112M	DRN 132M 132S
						3				
6.1	870	9840	6	228.99	✓					
7.1	870	9840	6	195.39	✓	✓				
8.1	870	9840	6	170.85	✓	✓	✓			
8.6	870	9840	6	162.31	✓	✓	✓			
9.8	870	9840	6	142.40	✓	✓	✓	✓		
11	870	9840	6	120.79	✓	✓	✓	✓	✓	
12	870	9840	6	109.04	✓	✓	✓	✓	✓	
14	870	9840	6	95.94	✓	✓	✓	✓	✓	✓
15	870	9840	6	90.59	✓	✓	✓	✓	✓	✓
17	870	9840	6	79.76	✓	✓	✓	✓		
20	870	9840	6	67.65	✓	✓	✓	✓	✓	
22	870	9840	6	61.07	✓	✓	✓	✓	✓	
26	870	9840	6	53.73	✓	✓	✓	✓	✓	✓
27	870	9840	6	50.74	✓	✓	✓	✓	✓	✓
32	870	9840	6	43.20	✓	✓	✓	✓	✓	✓
35	780	10700	6	39.26	✓	✓	✓	✓	✓	✓
41	740	11000	6	34.01	✓	✓	✓	✓	✓	✓
						2				
38	870	9840	5	36.30	✓	✓	✓			
43	870	9840	5	32.08	✓	✓	✓	✓		
51	870	9840	5	27.41	✓	✓	✓	✓	✓	
55	870	9840	5	25.13	✓	✓	✓	✓	✓	
63	870	9840	5	22.05	✓	✓	✓	✓	✓	✓

F67, n_e = 1400 min^{-1} — **870 Nm**

n_a min^{-1}	M_{amax} Nm	F_{Ra} N	$\varphi_{(/R)}$	i	DRN 63M 63MS 71M 71MS 80MK 80MS	DRN 80M 90S	DRN 90L	DRN 100L 100LM 100LS	DRN 112M	DRN 132M 132S
66	870	9840	5	20.90*	✓	✓	✓	✓	✓	✓
76	870	9840	6	18.29	✓	✓	✓	✓	✓	✓
84	870	9840	6	16.48	✓	✓	✓	✓	✓	✓
96	870	9840	6	14.46	✓	✓	✓	✓	✓	✓
109	870	9840	6	12.76		✓	✓	✓	✓	✓
123	870	9840	6	11.31		✓	✓	✓	✓	✓
144	870	9840	6	9.66		✓	✓	✓	✓	✓
154	610	10900	8	9.08	✓	✓	✓	✓	✓	✓
162	610	10700	8	8.60	✓	✓	✓	✓	✓	✓
185	610	10100	8	7.53	✓	✓	✓	✓	✓	✓
206	620	9660	9	6.78	✓	✓	✓	✓	✓	✓
235	610	9200	9	5.95	✓	✓	✓	✓	✓	✓
266	590	8850	9	5.25		✓	✓	✓	✓	✓
300	560	8590	9	4.66		✓	✓	✓	✓	✓
352	500	8390	10	3.97		✓	✓	✓	✓	✓

F67R37, n_e = 1400 min^{-1} — **870 Nm**

n_a min^{-1}	M_{amax} Nm	F_{Ra} N	$\varphi_{(/R)}$	i	DRN 63M 63MS 71M 71MS 80MK 80MS	DRN 80M 90S	DRN 90L	DRN 100L 100LM 100LS
					3 3			
0.07	870	9840	6	19199	✓			
0.07	870	9840	6	17610	✓			
0.09	870	9840	6	14992	✓	✓		
0.1	870	9840	6	12926	✓	✓	✓	
0.12	870	9840	6	11480	✓	✓		
0.13	870	9840	6	10220	✓	✓	✓	
0.15	870	9840	6	8933	✓	✓	✓	✓
0.17	870	9840	6	7940	✓	✓		
0.19	870	9840	6	7096	✓	✓	✓	✓
0.23	870	9840	6	6080	✓	✓		
0.26	870	9840	7	5341	✓	✓		
0.29	870	9840	7	4690	✓	✓	✓	
0.34	870	9840	6	4091	✓	✓	✓	✓
0.39	870	9840	7	3574	✓	✓	✓	
0.44	870	9840	6	3133	✓	✓	✓	✓
0.5	870	9840	6	2756	✓	✓	✓	✓
0.57	870	9840	7	2439	✓	✓	✓	
					2 3			
0.41	870	9840	6	3377	✓	✓		
0.48	870	9840	6	2912	✓	✓	✓	
0.51	870	9840	6	2714	✓	✓	✓	
0.59	870	9840	6	2372	✓	✓	✓	✓
0.65	870	9840	6	2126	✓	✓	✓	
0.75	870	9840	6	1859	✓	✓	✓	✓

F67R37, n_e = 1400 min^{-1} **870 Nm**

n_a min^{-1}	M_{amax} Nm	F_{Ra} N	$\varphi_{(/R)}$	i	DRN 63M 63MS 71M 71MS 80MK 80MS	DRN 80M 90S	DRN 90L	DRN 100L 100LM 100LS
0.85	870	9840	6	1631	✓	✓	✓	✓
0.97	870	9840	6	1437	✓	✓	✓	
1.1	870	9840	6	1256	✓	✓	✓	✓
1.2	870	9840	6	1126	✓	✓	✓	
1.4	870	9840	6	984	✓	✓	✓	✓
1.6	870	9840	6	864	✓	✓	✓	✓
1.9	870	9840	6	722	✓	✓	✓	✓
2.2	870	9840	6	634	✓	✓	✓	✓
2.5	870	9840	6	539	✓	✓	✓	✓
					 3  2			
0.66	870	9840	6	2106	✓	✓	✓	
0.74	870	9840	6	1884	✓	✓	✓	✓
0.85	870	9840	6	1635	✓	✓	✓	
0.97	870	9840	6	1429	✓	✓	✓	✓
1.1	870	9840	6	1271	✓	✓	✓	✓
1.2	870	9840	6	1102	✓	✓	✓	✓
1.4	870	9840	6	970	✓	✓	✓	✓
1.6	870	9840	6	858	✓	✓	✓	✓
1.8	870	9840	6	755	✓	✓	✓	✓
2.1	870	9840	7	641	✓	✓	✓	✓
2.4	870	9840	7	572	✓	✓	✓	✓
2.7	870	9840	7	509	✓	✓	✓	✓
3.2	870	9840	7	437	✓	✓	✓	✓
3.6	870	9840	7	384	✓	✓	✓	✓
4.1	870	9840	7	338	✓	✓	✓	✓
4.5	870	9840	7	305	✓	✓	✓	✓
5.4	870	9840	7	257	✓	✓	✓	✓
6	870	9840	7	231	✓	✓	✓	✓
6.8	870	9840	7	205	✓	✓	✓	✓
8	870	9840	7	175	✓	✓	✓	✓
					 2  2			
2.8	870	9840	6	500	✓	✓	✓	✓
3	870	9840	6	454	✓	✓	✓	
3.5	870	9840	6	392	✓	✓	✓	✓
4.2	870	9840	6	333	✓	✓	✓	✓
4.7	870	9840	6	297	✓	✓	✓	✓
5.3	870	9840	6	261	✓	✓	✓	✓
5.8	870	9840	6	238	✓	✓	✓	✓
7	870	9840	6	200	✓	✓	✓	✓
7.9	870	9840	6	176	✓	✓	✓	✓

F77, n_e = 1400 min^{-1}											1500 Nm
n_a min^{-1}	M_{amax} Nm	F_{Ra} N	$\varphi_{(/R)}$	i	DRN 63M 63MS 71M 71MS 80MK 80MS	DRN 80M 90S	DRN 90L	DRN 100L 100LM 100LS	DRN 112M	DRN 132M 132S	DRN 132L 160L 160M
						3					
4.9	1500	15700	5	281.71	✓						
5.3	1500	15700	5	262.93	✓						
6.2	1500	15700	5	225.79	✓	✓					
7	1500	15700	5	198.31	✓	✓	✓				
7.4	1500	15700	5	188.40	✓	✓	✓				
8.4	1500	15700	5	166.47	✓	✓	✓	✓			
9.8	1500	15700	5	142.27	✓	✓	✓	✓	✓		
10	1500	15700	5	130.42	✓	✓	✓	✓	✓		
12	1500	15700	5	114.45	✓	✓	✓	✓	✓	✓	
12	1500	15700	5	108.46*	✓	✓	✓	✓	✓	✓	
14	1500	15700	5	94.93	✓	✓	✓	✓	✓	✓	
16	1500	15700	6	85.52	✓	✓	✓	✓	✓	✓	
18	1500	15700	6	75.02	✓	✓	✓	✓	✓	✓	
19	1500	15700	6	72.50	✓	✓	✓	✓	✓		
21	1500	15700	6	66.46	✓	✓	✓	✓	✓		
24	1500	15700	6	58.32	✓	✓	✓	✓	✓	✓	
25	1500	15700	6	55.27	✓	✓	✓	✓	✓	✓	
28	1500	15700	6	48.37	✓	✓	✓	✓	✓	✓	
32	1500	15700	6	43.58	✓	✓	✓	✓	✓	✓	✓
36	1500	15700	6	38.23	✓	✓	✓	✓	✓	✓	✓
41	1500	15700	6	33.74		✓	✓	✓	✓	✓	✓
46	1500	15700	6	29.91		✓	✓	✓	✓	✓	✓
54	1450	16100	6	25.54		✓	✓	✓	✓	✓	✓
						2					
38	1110	17900	5	36.58	✓	✓	✓	✓			
44	1380	16500	5	31.51	✓	✓	✓	✓	✓		
48	1430	16200	5	28.75	✓	✓	✓	✓	✓		
54	1500	15700	5	25.50*	✓	✓	✓	✓	✓	✓	
65	1500	15700	5	21.43	✓	✓	✓	✓	✓	✓	
71	1500	15700	5	19.70	✓	✓	✓	✓	✓	✓	✓
80	1500	15700	5	17.49	✓	✓	✓	✓	✓	✓	✓
89	1500	15700	5	15.64*		✓	✓	✓	✓	✓	✓
99	1500	15700	5	14.06		✓	✓	✓	✓	✓	✓
114	1500	14900	5	12.20		✓	✓	✓	✓	✓	✓
128	1500	14200	6	10.93				✓	✓	✓	✓
150	1080	13800	7	9.30	✓	✓	✓	✓	✓	✓	✓
169	1080	13100	7	8.26	✓	✓	✓	✓	✓	✓	✓
189	1080	12500	7	7.39		✓	✓	✓	✓	✓	✓
210	1080	12000	8	6.64		✓	✓	✓	✓	✓	✓
243	1080	11300	8	5.76		✓	✓	✓	✓	✓	✓
271	1080	10700	8	5.16				✓	✓	✓	✓
327	1010	10200	8	4.28				✓	✓	✓	✓

F77R37, n_e = 1400 min^{-1} **1500 Nm**

n_a min^{-1}	M_{amax} Nm	F_{Ra} N	$\varphi_{(/R)}$	i	DRN 63M 63MS 71M 71MS 80MK 80MS	DRN 80M 90S	DRN 90L	DRN 100L 100LM 100LS
					3 3			
0.07	1500	15700	6	19180	✓			
0.07	1500	15700	6	17593	✓			
0.08	1500	15700	6	16128	✓			
0.09	1500	15700	6	14978	✓	✓		
0.1	1500	15700	6	13731	✓	✓		
0.11	1500	15700	6	12049	✓	✓		
0.12	1500	15700	6	11035	✓	✓	✓	
0.14	1500	15700	6	9683	✓	✓	✓	
0.16	1500	15700	6	8464	✓	✓	✓	✓
0.18	1500	15700	6	7520	✓	✓	✓	
0.21	1500	15700	6	6580	✓	✓	✓	
0.24	1500	15700	6	5808	✓	✓	✓	✓
0.27	1500	15700	6	5026	✓	✓	✓	
0.31	1500	15700	6	4435	✓	✓	✓	✓
0.36	1500	15700	6	3832	✓	✓	✓	
0.41	1500	15700	6	3381	✓	✓	✓	✓
0.47	1500	15700	6	2978	✓	✓	✓	
0.53	1500	15700	6	2613	✓	✓	✓	
0.61	1500	15700	6	2284	✓	✓	✓	✓
0.68	1500	15700	6	2029	✓	✓	✓	
					2 3			
0.28	1110	17900	5	4931	✓			
0.3	1110	17900	5	4523	✓			
0.36	1110	17900	5	3851	✓	✓		
0.42	1110	17900	5	3320	✓	✓	✓	
0.45	1110	17900	5	3095	✓	✓	✓	
0.51	1110	17900	5	2705	✓	✓	✓	✓
0.55	1110	17900	5	2536	✓	✓	✓	
0.62	1110	17900	5	2238	✓	✓	✓	✓
0.68	1110	17900	5	2039	✓	✓		
0.79	1110	17900	5	1759	✓	✓	✓	
0.85	1110	17900	5	1639	✓	✓	✓	
0.97	1110	17900	5	1433	✓	✓	✓	✓
1	1110	17900	5	1343	✓	✓	✓	
1.1	1110	17900	5	1185	✓	✓	✓	✓
1.3	1110	17900	5	1051	✓	✓	✓	✓
1.5	1110	17900	5	893	✓	✓	✓	✓
					3 2			
0.81	1500	15700	6	1728	✓	✓	✓	✓
0.9	1500	15700	6	1544	✓	✓	✓	
1	1500	15700	6	1354	✓	✓	✓	
1.1	1500	15700	6	1200	✓	✓	✓	
1.3	1500	15700	6	1053	✓	✓	✓	
1.5	1500	15700	6	910	✓	✓	✓	✓
1.7	1500	15700	6	810	✓	✓	✓	✓
1.9	1500	15700	6	710	✓	✓	✓	✓
2.2	1500	15700	6	615	✓	✓	✓	✓
2.6	1500	15700	6	538	✓	✓	✓	✓

F77R37, n_e = 1400 min^{-1} — **1500 Nm**

n_a min^{-1}	M_{amax} Nm	F_{Ra} N	$\varphi_{(/R)}$	i	DRN 63M 63MS 71M 71MS 80MK 80MS	DRN 80M 90S	DRN 90L	DRN 100L 100LM 100LS
2.9	1500	15700	6	480	✓	✓	✓	✓
3.3	1500	15700	6	413	✓	✓	✓	✓
3.8	1500	15700	6	367	✓	✓	✓	✓
4.3	1500	15700	7	323	✓	✓	✓	✓
5	1500	15700	6	280	✓	✓	✓	✓
5.6	1500	15700	7	247	✓	✓	✓	✓
6.3	1500	15700	7	221	✓	✓	✓	✓
7	1500	15700	6	199	✓	✓	✓	✓
					2	2		
1.7	1110	17900	5	815	✓	✓		
1.9	1110	17900	5	706	✓	✓	✓	
2.1	1110	17900	5	660	✓	✓	✓	
2.4	1110	17900	5	571	✓	✓	✓	✓
2.8	1110	17900	5	485	✓	✓	✓	✓
3.2	1110	17900	5	433	✓	✓	✓	✓
3.7	1110	17900	5	370	✓	✓	✓	✓
4	1110	17900	5	346	✓	✓	✓	✓
4.7	1110	17900	5	292	✓	✓	✓	✓

F87, n_e = 1400 min^{-1} — **3000 Nm**

n_a min^{-1}	M_{amax} Nm	F_{Ra} N	$\varphi_{(/R)}$	i	DRN 71M 80MK 80MS	DRN 80M 90S	DRN 90L	DRN 100L 100LM 100LS	DRN 112M	DRN 132M 132S	DRN 132L 160L 160M	DRN 180L 180M	DRN 200L
							3						
5.1	3000	19800	7	270.68	✓	✓	✓						
5.4	3000	19800	7	255.37	✓	✓	✓						
6.1	3000	19800	7	228.93	✓	✓	✓	✓					
7	3000	19800	7	197.20	✓	✓	✓	✓	✓				
7.7	3000	19800	7	179.97	✓	✓	✓	✓	✓				
8.7	3000	19800	7	159.61	✓	✓	✓	✓	✓	✓			
10	3000	19800	7	134.16	✓	✓	✓	✓	✓	✓			
11	3000	19800	7	123.29	✓	✓	✓	✓	✓	✓	✓		
12	3000	19800	7	109.49	✓	✓	✓	✓	✓	✓	✓		
14	3000	19800	7	97.89		✓	✓	✓	✓	✓	✓		
15	3000	19800	7	88.01		✓	✓	✓	✓	✓	✓		
18	3000	19800	7	76.39		✓	✓	✓	✓	✓	✓		
20	3000	19600	7	68.40				✓	✓	✓	✓		
24	3000	17700	7	56.75				✓	✓	✓	✓		
27	2940	16800	7	50.36		✓	✓	✓	✓	✓	✓	✓	
30	2820	16200	8	45.28		✓	✓	✓	✓	✓	✓	✓	
35	2720	15400	8	39.30		✓	✓	✓	✓	✓	✓	✓	✓
39	2610	14900	8	35.19				✓	✓	✓	✓	✓	✓
47	2510	13800	8	29.20				✓	✓	✓	✓	✓	✓
							2						
41	2610	14600	7	33.92	✓	✓	✓	✓	✓	✓			
48	2450	13900	7	28.78	✓	✓	✓	✓	✓	✓			

F87, n_e = 1400 min^{-1} — **3000 Nm**

n_a min^{-1}	M_{amax} Nm	F_{Ra} N	$\varphi_{(/R)}$	i	DRN 71M 80MK 80MS	DRN 80M 90S	DRN 90L	DRN 100L 100LM 100LS	DRN 112M	DRN 132M 132S	DRN 132L 160L 160M	DRN 180L 180M	DRN 200L
52	3000	11100	7	26.50	✓	✓	✓	✓	✓	✓	✓		
59	3000	10300	7	23.68	✓	✓	✓	✓	✓	✓	✓		
65	3000	9530	7	21.32*		✓	✓	✓	✓	✓	✓	✓	
72	3000	8840	7	19.31		✓	✓	✓	✓	✓	✓	✓	
81	3000	8040	7	17.12		✓	✓	✓	✓	✓	✓	✓	✓
90	3000	7390	7	15.48				✓	✓	✓	✓	✓	✓
106	3000	6370	7	13.12*				✓	✓	✓	✓	✓	✓
122	3000	5580	7	11.46						✓	✓	✓	✓
146	2880	5050	7	9.58						✓	✓	✓	✓
168	1530	8890	7	8.29		✓	✓	✓	✓	✓	✓	✓	
190	1530	8280	7	7.35		✓	✓	✓	✓	✓	✓	✓	✓
210	1530	7790	7	6.65				✓	✓	✓	✓	✓	✓
248	1530	7020	7	5.63				✓	✓	✓	✓	✓	✓
284	1530	6430	7	4.92						✓	✓	✓	✓
339	1460	5980	7	4.12						✓	✓	✓	✓

F87R57, n_e = 1400 min^{-1} — **3000 Nm**

n_a min^{-1}	M_{amax} Nm	F_{Ra} N	$\varphi_{(/R)}$	i	DRN 63M 63MS 71M 71MS 80MK 80MS	DRN 80M 90S	DRN 90L	DRN 100L 100LM 100LS	DRN 112M	DRN 132M 132S
						3 3				
0.06	3000	19800	7	23042	✓					
0.06	3000	19800	7	20462	✓					
0.07	3000	19800	7	18238	✓	✓				
0.08	3000	19800	7	15877	✓	✓	✓			
0.09	3000	19800	7	14099	✓	✓	✓			
0.11	3000	19800	7	12205	✓	✓	✓			
0.13	3000	19800	7	10433	✓	✓	✓	✓		
0.14	3000	19800	7	9381	✓	✓	✓	✓		
0.17	3000	19800	7	8142	✓	✓	✓	✓		
0.19	3000	19800	7	7100	✓	✓	✓			
0.22	3000	19800	7	6273	✓	✓	✓	✓		
0.25	3000	19800	7	5510	✓	✓	✓	✓	✓	
0.28	3000	19800	7	4954	✓	✓	✓			
0.32	3000	19800	7	4245	✓	✓	✓	✓	✓	
0.37	3000	19800	7	3721	✓	✓	✓	✓	✓	✓
						2 3				
0.28	3000	19800	7	4952	✓					
0.3	3000	19800	7	4562	✓					
0.35	3000	19800	7	3919	✓	✓				
0.39	3000	19800	7	3503	✓	✓				
0.43	3000	19800	7	3196	✓	✓	✓			
0.49	3000	19800	7	2857	✓	✓	✓			
0.55	3000	19800	7	2524	✓	✓	✓	✓		
0.65	3000	19800	7	2134	✓	✓	✓	✓	✓	
0.73	3000	19800	8	1913	✓	✓	✓	✓	✓	
0.81	3000	19800	8	1717	✓	✓	✓	✓	✓	

F87R57, n_e = 1400 min^{-1} — **3000 Nm**

n_a min^{-1}	M_{amax} Nm	F_{Ra} N	$\varphi_{(/R)}$	i	DRN 63M 63MS 71M 71MS 80MK 80MS	DRN 80M 90S	DRN 90L	DRN 100L 100LM 100LS	DRN 112M	DRN 132M 132S
0.94	3000	19800	8	1476	✓	✓	✓			
1	3000	19800	7	1278	✓	✓	✓	✓	✓	
1.2	3000	19800	8	1142	✓	✓	✓	✓	✓	
1.4	3000	19800	7	988	✓	✓	✓	✓	✓	✓
1.5	3000	19800	8	883	✓	✓	✓	✓	✓	✓
1.8	3000	19800	8	748	✓	✓	✓	✓	✓	✓
						3 2				
0.43	3000	19800	7	3244	✓	✓	✓			
0.48	3000	19800	7	2881	✓	✓	✓			
0.54	3000	19800	7	2576	✓	✓	✓			
0.63	3000	19800	7	2199	✓	✓	✓			
0.72	3000	19800	7	1930	✓	✓	✓	✓		
0.81	3000	19800	7	1709	✓	✓	✓			
0.93	3000	19800	7	1493	✓	✓	✓			
1	3000	19800	7	1300	✓	✓	✓	✓	✓	✓
1.2	3000	19800	7	1148	✓	✓	✓	✓	✓	
1.3	3000	19800	7	1010	✓	✓	✓	✓	✓	✓
1.5	3000	19800	7	887	✓	✓	✓	✓	✓	
1.7	3000	19800	7	780	✓	✓	✓	✓	✓	✓
2	3000	19800	7	674	✓	✓	✓	✓	✓	✓
2.2	3000	19800	7	609	✓	✓	✓	✓	✓	✓
2.7	3000	19800	7	515	✓	✓	✓	✓	✓	✓
3	3000	19800	7	452	✓	✓	✓	✓	✓	✓
4	3000	19800	7	345	✓	✓	✓	✓	✓	✓
4.6	3000	19800	7	300		✓	✓	✓	✓	✓
5.6	3000	19800	8	249		✓	✓	✓	✓	✓
						2 2				
2.1	3000	19800	7	662	✓	✓	✓			
2.3	3000	19800	7	592	✓	✓	✓			
2.6	3000	19800	7	519	✓	✓	✓	✓		
2.9	3000	19800	8	468	✓	✓	✓	✓		
3.5	3000	19800	7	398	✓	✓	✓	✓	✓	
4	3000	19800	7	350	✓	✓	✓	✓	✓	✓
4.4	3000	19800	8	315	✓	✓	✓	✓	✓	✓
4.9	3000	19800	7	281	✓	✓	✓	✓	✓	✓
5.8	3000	19800	8	240	✓	✓	✓	✓	✓	
6.6	3000	19800	8	211	✓	✓	✓	✓	✓	✓
7.2	3000	19800	8	193	✓	✓	✓	✓	✓	

F97, n_e = 1400 min^{-1} — **4300 Nm**

n_a min^{-1}	M_{amax} Nm	F_{Ra} N	$\varphi_{(/R)}$	i	DRN 80M 90S	DRN 90L	DRN 100L 100LM 100LS	DRN 112M	DRN 132M 132S	DRN 132L 160L 160M	DRN 180L 180M	DRN 200L 225S
							3					
5	4300	29900	6	276.77	✓	✓	✓	✓				
5.5	4300	29900	6	253.41	✓	✓	✓	✓				
6.2	4300	29900	6	223.88	✓	✓	✓	✓	✓			

F97, n_e = 1400 min^{-1} — **4300 Nm**

n_a min^{-1}	M_{amax} Nm	F_{Ra} N	$\varphi_{(/R)}$	i	DRN 80M 90S	DRN 90L	DRN 100L 100LM 100LS	DRN 112M	DRN 132M 132S	DRN 132L 160L 160M	DRN 180L 180M	DRN 200L 225S
7.3	4300	29900	6	189.92	✓	✓	✓	✓	✓			
8	4300	29900	6	174.87	✓	✓	✓	✓	✓	✓		
8.9	4300	29900	6	156.30	✓	✓	✓	✓	✓	✓		
9.9	4300	29900	6	140.71	✓	✓	✓	✓	✓	✓	✓	
10	4300	29900	6	127.42	✓	✓	✓	✓	✓	✓	✓	
12	4300	29900	6	112.99	✓	✓	✓	✓	✓	✓	✓	✓
13	4300	29900	6	102.16			✓	✓	✓	✓	✓	✓
14	4300	29900	6	97.58	✓	✓	✓	✓	✓			
15	4300	29900	6	89.85	✓	✓	✓	✓	✓	✓		
16	4300	29900	6	86.59			✓	✓	✓	✓	✓	✓
17	4300	29900	6	80.31	✓	✓	✓	✓	✓	✓		
18	4300	29900	6	75.63					✓	✓	✓	✓
19	4300	29900	6	72.29	✓	✓	✓	✓	✓	✓	✓	
21	4300	29000	6	65.47	✓	✓	✓	✓	✓	✓	✓	
24	4300	27200	6	58.06	✓	✓	✓	✓	✓	✓	✓	✓
26	4300	25800	6	52.49			✓	✓	✓	✓	✓	✓
31	4300	23600	6	44.49			✓	✓	✓	✓	✓	✓
36	4300	21900	6	38.86					✓	✓	✓	✓
43	4300	19800	6	32.50					✓	✓	✓	✓
							 2					
32	3070	27600	6	43.28	✓	✓	✓	✓	✓			
38	3070	25500	6	36.64	✓	✓	✓	✓	✓			
41	4300	20300	6	33.91	✓	✓	✓	✓	✓	✓		
46	4300	19000	6	30.39	✓	✓	✓	✓	✓	✓		
51	4300	17900	6	27.44*	✓	✓	✓	✓	✓	✓	✓	
56	4300	16800	6	24.92	✓	✓	✓	✓	✓	✓	✓	
63	4300	15600	6	22.11	✓	✓	✓	✓	✓	✓	✓	✓
69	4300	14600	6	20.07			✓	✓	✓	✓	✓	✓
81	4300	13200	6	17.25*			✓	✓	✓	✓	✓	✓
92	4300	11900	6	15.06					✓	✓	✓	✓
109	4300	10500	6	12.77					✓	✓	✓	✓
125	4100	10000	6	11.16					✓	✓	✓	✓
154	2360	13400	9	9.06	✓	✓	✓	✓	✓	✓	✓	✓
170	2360	12600	9	8.22			✓	✓	✓	✓	✓	✓
198	2360	11500	9	7.07			✓	✓	✓	✓	✓	✓
226	2250	11100	9	6.17					✓	✓	✓	✓
267	2150	10400	9	5.23					✓	✓	✓	✓
306	2050	9950	9	4.57					✓	✓	✓	✓
361	1800	9970	9	3.87						✓	✓	✓

F97R57, n_e = 1400 min^{-1} — **4300 Nm**

n_a min^{-1}	M_{amax} Nm	F_{Ra} N	$\varphi_{(/R)}$	i	DRN 63M 63MS 71M 71MS 80MK 80MS	DRN 80M 90S	DRN 90L	DRN 100L 100LM 100LS	DRN 112M	DRN 132M 132S
						 3  3				
0.04	4300	29900	6	29211	✓					
0.05	4300	29900	6	26911	✓					
0.05	4300	29900	6	23814	✓					

F97R57, n_e = 1400 min^{-1}										4300 Nm
n_a min^{-1}	M_{amax} Nm	F_{Ra} N	$\varphi_{(/R)}$	i	DRN 63M 63MS 71M 71MS 80MK 80MS	DRN 80M 90S	DRN 90L	DRN 100L 100LM 100LS	DRN 112M	DRN 132M 132S
0.06	4300	29900	6	20813	✓	✓				
0.07	4300	29900	6	18119	✓	✓	✓			
0.09	4300	29900	6	15472	✓	✓	✓			
0.09	4300	29900	6	14022	✓	✓	✓	✓	✓	
0.11	4300	29900	6	12324	✓	✓	✓			
0.12	4300	29900	6	10838	✓	✓	✓			
0.14	4300	29900	6	9576	✓	✓	✓	✓		
0.16	4300	29900	6	8318	✓	✓	✓			
0.19	4300	29900	6	7328	✓	✓	✓			
0.21	4300	29900	6	6469	✓	✓	✓	✓	✓	
0.24	4300	29900	6	5615	✓	✓	✓			
0.28	4300	29900	6	4961	✓	✓	✓	✓		
0.32	4300	29900	6	4333	✓	✓	✓	✓		
						 2 3				
0.22	4300	29900	6	6338	✓					
0.24	4300	29900	6	5680	✓					
0.27	4300	29900	6	5016	✓	✓				
0.32	4300	29900	6	4367	✓	✓	✓			
0.35	4300	29900	6	3914	✓	✓	✓			
0.41	4300	29900	6	3357	✓	✓	✓			
0.46	4300	29900	6	3009	✓	✓	✓			
0.57	4300	29900	6	2448	✓	✓	✓	✓	✓	
0.63	4300	29900	6	2199	✓	✓	✓			
0.71	4300	29900	6	1971	✓	✓	✓			
0.8	4300	29900	6	1741	✓	✓	✓	✓		
0.95	4300	29900	6	1468	✓	✓	✓	✓	✓	
1	4300	29900	6	1316	✓	✓	✓	✓	✓	
1.1	4300	29900	6	1189	✓	✓	✓	✓	✓	✓
1.3	4300	29900	6	1023	✓	✓	✓	✓	✓	✓
						 3 2				
0.35	4300	29900	6	3906	✓	✓	✓			
0.41	4300	29900	6	3352	✓	✓	✓			
0.48	4300	29900	6	2907	✓	✓	✓	✓	✓	
0.54	4300	29900	6	2553	✓	✓	✓			
0.62	4300	29900	6	2245	✓	✓	✓			
0.71	4300	29900	6	1970	✓	✓	✓	✓		
0.81	4300	29900	7	1722	✓	✓	✓			
0.91	4300	29900	7	1527	✓	✓	✓			
1	4300	29900	6	1327	✓	✓	✓	✓	✓	✓
1.1	4300	29900	7	1171	✓	✓	✓			
1.3	4300	29900	7	1022	✓	✓	✓			
1.5	4300	29900	6	898	✓	✓	✓	✓	✓	✓
1.7	4300	29900	6	784	✓	✓	✓	✓	✓	
2	4300	29900	7	690	✓	✓	✓	✓	✓	✓
2.3	4300	29900	7	605	✓	✓	✓	✓	✓	✓
2.6	4300	29900	7	529	✓	✓	✓	✓	✓	✓
2.9	4300	29900	7	467	✓	✓	✓	✓	✓	✓
3.4	4300	29900	7	406	✓	✓	✓	✓	✓	✓
3.8	4300	29900	7	363	✓	✓	✓	✓	✓	✓

F97R57, n_e = 1400 min^{-1} — **4300 Nm**

n_a min^{-1}	M_{amax} Nm	F_{Ra} N	$\varphi_{(/R)}$	i	DRN 63M 63MS 71M 71MS 80MK 80MS	DRN 80M 90S	DRN 90L	DRN 100L 100LM 100LS	DRN 112M	DRN 132M 132S
4.9	4300	29900	7	285	✓	✓	✓	✓	✓	✓
5.7	4300	29900	7	245	✓	✓	✓	✓	✓	✓
6.7	4300	29900	7	208	✓	✓	✓	✓	✓	✓
7.1	4300	29900	7	195		✓	✓	✓	✓	✓
						2	2			
1.5	4300	29900	6	892	✓	✓	✓			
1.8	4300	29900	6	760	✓	✓	✓			
2	4300	29900	6	667	✓	✓	✓	✓		
2.4	4300	29900	6	569	✓	✓	✓	✓	✓	
2.7	4300	29900	6	510	✓	✓	✓	✓	✓	
2.9	4300	29900	6	473	✓	✓	✓	✓	✓	✓
3.4	4300	29900	6	403	✓	✓	✓	✓	✓	✓
3.8	4300	29900	6	361	✓	✓	✓	✓	✓	✓
4.4	4300	29900	6	317	✓	✓	✓	✓	✓	✓
5	4300	29900	6	275	✓	✓	✓	✓	✓	
5.7	4300	29900	6	242	✓	✓	✓	✓	✓	✓

F107, n_e = 1400 min^{-1} — **7840 Nm**

n_a min^{-1}	M_{amax} Nm	F_{Ra} N	$\varphi_{(/R)}$	i	DRN 100L 100LM 100LS	DRN 112M	DRN 132M 132S	DRN 132L 160L 160M	DRN 180L 180M	DRN 200L 225M 225S	DRN 250M 280M 280S
						3					
5.5	7680	49800	5	254.40*	✓	✓	✓				
6.5	7680	49800	5	215.37	✓	✓	✓				
7	7680	49800	5	199.31	✓	✓	✓	✓			
7.8	7680	49800	5	178.64	✓	✓	✓	✓			
8.6	7680	49800	5	161.28*	✓	✓	✓	✓	✓		
9.5	7680	49800	5	146.49	✓	✓	✓	✓	✓		
10	7680	49800	5	129.97	✓	✓	✓	✓	✓	✓	
11	7680	49800	5	117.94	✓	✓	✓	✓	✓	✓	
13	7680	49800	5	101.38*	✓	✓	✓	✓	✓	✓	✓
15	7680	49800	6	92.47*	✓	✓	✓	✓	✓		
15	7680	49800	5	88.49			✓	✓	✓	✓	✓
16	7680	49800	6	83.99	✓	✓	✓	✓	✓		
18	7680	49800	6	74.52	✓	✓	✓	✓	✓	✓	
20	7680	49800	6	67.62	✓	✓	✓	✓	✓	✓	
24	7680	47800	6	58.12*	✓	✓	✓	✓	✓	✓	✓
27	7680	45100	6	50.73			✓	✓	✓	✓	✓
32	7680	42000	6	43.03			✓	✓	✓	✓	✓
37	7680	39500	6	37.61			✓	✓	✓	✓	✓
44	7680	36500	6	31.80				✓	✓	✓	✓
						2					
41	7400	38300	5	33.79*	✓	✓	✓	✓	✓		
50	7840	33300	5	27.57	✓	✓	✓	✓	✓	✓	
55	7840	31500	5	25.14	✓	✓	✓	✓	✓	✓	
64	7840	28800	5	21.76*	✓	✓	✓	✓	✓	✓	✓
72	7840	26500	5	19.20*			✓	✓	✓	✓	✓

F107, n_e = 1400 min^{-1}											7840 Nm
n_a min^{-1}	M_{amax} Nm	F_{Ra} N	$\varphi_{(/R)}$	i	DRN 100L 100LM 100LS	DRN 112M	DRN 132M 132S	DRN 132L 160L 160M	DRN 180L 180M	DRN 200L 225M 225S	DRN 250M 280M 280S
84	7840	23900	5	16.58			✓	✓	✓	✓	✓
95	7680	22400	5	14.67			✓	✓	✓	✓	✓
113	7000	22600	5	12.33				✓	✓	✓	✓
140	6500	21500	5	9.96					✓	✓	✓
144	4910	23500	7	9.69			✓	✓	✓	✓	✓
167	4800	22000	7	8.37			✓	✓	✓	✓	✓
189	4600	21300	7	7.40			✓	✓	✓	✓	✓
225	4600	19000	7	6.22				✓	✓	✓	✓
278	4600	16400	7	5.03					✓	✓	✓

F107R77, n_e = 1400 min^{-1}											7840 Nm
n_a min^{-1}	M_{amax} Nm	F_{Ra} N	$\varphi_{(/R)}$	i	DRN 63M 63MS 71M 71MS 80MK 80MS	DRN 80M 90S	DRN 90L	DRN 100L 100LM 100LS	DRN 112M	DRN 132M 132S	DRN 132L 160L 160M
					3	3					
0.05	7680	49800	6	25375	✓						
0.06	7680	49800	6	21652	✓	✓					
0.07	7680	49800	6	18933	✓	✓	✓				
0.08	7680	49800	6	16888	✓	✓					
0.09	7680	49800	6	14767	✓	✓	✓				
0.12	7680	49800	6	11348	✓						
0.13	7680	49800	6	10039	✓	✓	✓	✓	✓	✓	
0.16	7680	49800	6	8548	✓	✓	✓	✓	✓	✓	
0.18	7680	49800	6	7674	✓	✓	✓	✓	✓		
0.2	7680	49800	6	6767	✓	✓	✓	✓	✓		
0.23	7680	49800	6	5954	✓	✓	✓	✓	✓	✓	
0.26	7680	49800	6	5223	✓	✓	✓	✓	✓	✓	
0.3	7680	49800	6	4567	✓	✓	✓	✓			
0.35	7680	49800	6	3948	✓	✓	✓	✓	✓	✓	✓
0.39	7680	49800	6	3521	✓	✓	✓	✓	✓		
					2	3					
0.26	7840	49400	6	5383	✓						
0.3	7840	49400	6	4593	✓	✓					
0.34	7840	49400	6	4016	✓	✓	✓				
0.36	7840	49400	6	3815	✓	✓	✓				
0.41	7840	49400	6	3347	✓	✓	✓	✓			
0.49	7840	49400	6	2839	✓	✓	✓	✓	✓		
0.54	7840	49400	6	2563	✓	✓	✓	✓	✓		
0.62	7840	49400	6	2255	✓	✓	✓	✓	✓	✓	
0.77	7840	49400	6	1813	✓	✓	✓	✓	✓	✓	
0.88	7840	49400	6	1590	✓	✓	✓	✓	✓		
0.97	7840	49400	6	1436	✓	✓	✓	✓	✓		
1.1	7840	49400	6	1263	✓	✓	✓	✓	✓	✓	
1.1	7840	49400	6	1193	✓	✓	✓	✓	✓	✓	
1.3	7840	49400	6	1015	✓	✓	✓	✓	✓	✓	
1.5	7840	49400	6	923	✓	✓	✓	✓	✓	✓	✓
1.7	7840	49400	6	800	✓	✓	✓	✓	✓	✓	✓
2	7840	49400	6	696		✓	✓	✓	✓	✓	✓

F107R77, n_e = 1400 min^{-1}											7840 Nm
n_a min^{-1}	M_{amax} Nm	F_{Ra} N	$\varphi_{(/R)}$	i	DRN 63M 63MS 71M 71MS 80MK 80MS	DRN 80M 90S	DRN 90L	DRN 100L 100LM 100LS	DRN 112M	DRN 132M 132S	DRN 132L 160L 160M
					3	2					
0.46	7680	49800	6	3037	✓	✓	✓	✓	✓		
0.5	7680	49800	6	2756	✓	✓	✓	✓	✓		
0.59	7680	49800	6	2369	✓	✓	✓	✓	✓		
0.67	7680	49800	6	2068	✓	✓	✓	✓	✓		
0.76	7680	49800	6	1826	✓	✓	✓	✓	✓	✓	✓
0.87	7680	49800	6	1597	✓	✓	✓	✓	✓		
0.99	7680	49800	6	1401	✓	✓	✓	✓	✓	✓	
1.1	7680	49800	6	1243	✓	✓	✓	✓	✓	✓	✓
1.2	7680	49800	6	1087	✓	✓	✓	✓	✓		
1.4	7680	49800	6	950	✓	✓	✓	✓	✓	✓	✓
1.6	7680	49800	6	834	✓	✓	✓	✓	✓	✓	✓
1.9	7680	49800	6	736		✓	✓	✓	✓	✓	✓
2.1	7680	49800	6	640	✓	✓	✓	✓	✓	✓	
2.5	7680	49800	6	560		✓	✓	✓	✓	✓	✓
2.8	7680	49800	6	489		✓	✓	✓	✓	✓	✓
3.2	7680	49800	6	436	✓	✓	✓	✓	✓	✓	
3.7	7680	49800	6	370	✓	✓	✓	✓	✓	✓	
4.2	7680	49800	6	333	✓	✓	✓	✓	✓	✓	✓
4.8	7680	49800	6	291	✓	✓	✓	✓	✓	✓	✓
5.4	7680	49800	6	255	✓	✓	✓	✓	✓	✓	✓
6.2	7680	49800	6	225		✓	✓	✓	✓	✓	✓
7.3	7680	49800	6	190		✓	✓	✓	✓	✓	✓
					2	2					
2.1	7840	49400	6	644	✓	✓	✓	✓	✓		
2.3	7840	49400	6	591	✓	✓	✓	✓	✓		
2.7	7840	49400	6	518	✓	✓	✓	✓	✓	✓	
2.8	7840	49400	6	491	✓	✓	✓	✓	✓	✓	
3.2	7840	49400	6	430	✓	✓	✓	✓	✓	✓	
3.6	7840	49400	6	387	✓	✓	✓	✓	✓	✓	✓
4.1	7840	49400	6	340	✓	✓	✓	✓	✓	✓	✓
4.6	7840	49400	6	300		✓	✓	✓	✓	✓	✓
5.2	7840	49400	6	266		✓	✓	✓	✓	✓	✓

F127, n_e = 1400 min^{-1}									12000 Nm
n_a min^{-1}	M_{amax} Nm	F_{Ra} N	$\varphi_{(/R)}$	i	DRN 132M 132S	DRN 132L 160L 160M	DRN 180L 180M	DRN 200L 225M 225S	DRN 250M 280M 280S
					3				
8.1	12000	90000	5	170.83	✓	✓			
9.1	12000	90000	5	153.67*	✓	✓	✓		
11	12000	90000	5	125.37	✓	✓	✓	✓	
12	12000	88000	5	114.34	✓	✓	✓	✓	
14	12000	83000	5	98.95	✓	✓	✓	✓	✓
16	12000	79000	5	87.31*	✓	✓	✓	✓	✓
18	12000	74300	5	75.41*	✓	✓	✓	✓	✓
19	12000	72100	5	70.07	✓	✓	✓	✓	

F127, n_e = 1400 min^{-1}									12000 Nm
n_a min^{-1}	M_{amax} Nm	F_{Ra} N	$\varphi_{(/R)}$	i	DRN 132M 132S	DRN 132L 160L 160M	DRN 180L 180M	DRN 200L 225M 225S	DRN 250M 280M 280S
21	12000	69400	5	63.91	✓	✓	✓	✓	
25	12000	65200	5	55.31	✓	✓	✓	✓	✓
28	12000	61300	5	48.80	✓	✓	✓	✓	✓
33	12000	56800	5	42.15	✓	✓	✓	✓	✓
37	12000	53200	5	37.28	✓	✓	✓	✓	✓
44	12000	48300	5	31.33		✓	✓	✓	✓
55	12000	42400	5	25.30			✓	✓	✓
						2			
52	8500	55300	5	26.86	✓	✓	✓	✓	
56	8500	53300	5	24.57	✓	✓	✓	✓	
65	12000	38000	5	21.38	✓	✓	✓	✓	✓
74	11000	38800	5	18.87	✓	✓	✓	✓	✓
85	11000	35400	5	16.36	✓	✓	✓	✓	✓
96	11000	32600	5	14.55	✓	✓	✓	✓	✓
111	10000	33300	5	12.54		✓	✓	✓	✓
137	9500	30900	5	10.19			✓	✓	✓
158	7000	36400	6	8.86	✓	✓	✓	✓	✓
177	6000	37000	6	7.88	✓	✓	✓	✓	✓
205	7000	32200	7	6.80		✓	✓	✓	✓
253	6000	31700	7	5.52			✓	✓	✓
299	6000	29500	7	4.68				✓	✓

F127R77, n_e = 1400 min^{-1}											12000 Nm
n_a min^{-1}	M_{amax} Nm	F_{Ra} N	$\varphi_{(/R)}$	i	DRN 63M 63MS 71M 71MS 80MK 80MS	DRN 80M 90S	DRN 90L	DRN 100L 100LM 100LS	DRN 112M	DRN 132M 132S	DRN 132L 160L 160M
						3 3					
0.05	12000	90000	5	24478	✓						
0.06	12000	90000	5	22323	✓						
0.07	12000	90000	5	19048	✓	✓					
0.08	12000	90000	5	16656	✓	✓	✓				
0.09	12000	90000	5	14722	✓						
0.1	12000	90000	5	12912	✓	✓	✓	✓	✓		
0.12	12000	90000	5	11656	✓	✓	✓	✓	✓		
0.13	12000	90000	5	10191	✓	✓	✓	✓	✓		
0.15	12000	90000	5	8831	✓	✓	✓	✓	✓	✓	
0.18	12000	90000	5	7643	✓	✓	✓	✓	✓	✓	
0.2	12000	90000	5	6715	✓	✓	✓	✓			
0.23	12000	90000	6	5925	✓	✓	✓	✓			
0.27	12000	90000	5	5153	✓	✓	✓	✓	✓		
0.3	12000	90000	5	4533	✓	✓	✓	✓	✓	✓	
0.35	12000	90000	5	3926	✓	✓	✓	✓	✓		
0.4	12000	90000	5	3454	✓	✓	✓	✓	✓	✓	
0.46	12000	90000	5	3031	✓	✓	✓	✓	✓	✓	
						3 2					
0.52	12000	90000	5	2672	✓	✓	✓	✓	✓		
0.59	12000	90000	5	2357	✓	✓	✓	✓	✓	✓	

F127R77, n_e = 1400 min^{-1} — **12000 Nm**

n_a min^{-1}	M_{amax} Nm	F_{Ra} N	$\varphi_{(/R)}$	i	DRN 63M 63MS 71M 71MS 80MK 80MS	DRN 80M 90S	DRN 90L	DRN 100L 100LM 100LS	DRN 112M	DRN 132M 132S	DRN 132L 160L 160M
0.68	12000	90000	5	2038	✓	✓	✓	✓	✓	✓	
0.78	12000	90000	5	1784	✓	✓	✓	✓	✓	✓	
0.87	12000	90000	5	1606	✓	✓	✓	✓	✓	✓	✓
1	12000	90000	5	1390	✓	✓	✓	✓	✓	✓	✓
1.1	12000	90000	5	1220	✓	✓	✓	✓	✓	✓	✓
1.2	12000	90000	5	1077	✓	✓	✓	✓	✓	✓	
1.5	12000	90000	5	930	✓	✓	✓	✓	✓	✓	✓
1.7	12000	90000	5	820		✓	✓	✓	✓	✓	✓
1.9	12000	90000	5	727		✓	✓	✓	✓	✓	✓
2.1	12000	90000	5	648	✓	✓	✓	✓	✓	✓	
2.5	12000	90000	5	549	✓	✓	✓	✓	✓	✓	
2.8	12000	90000	5	495	✓	✓	✓	✓	✓	✓	✓
3.2	12000	90000	6	428	✓	✓	✓	✓	✓	✓	✓
3.7	12000	90000	6	376	✓	✓	✓	✓	✓	✓	✓

F127R87, n_e = 1400 min^{-1} — **12000 Nm**

n_a min^{-1}	M_{amax} Nm	F_{Ra} N	$\varphi_{(/R)}$	i	DRN 80M 90S	DRN 90L	DRN 100L 100LM 100LS	DRN 112M	DRN 132M 132S	DRN 132L 160L 160M	DRN 180L 180M	DRN 200L
							3 2					
2.8	12000	90000	5	483			✓	✓	✓	✓	✓	✓
3.3	12000	90000	6	418	✓	✓	✓	✓	✓	✓	✓	✓
3.7	12000	90000	6	374			✓	✓	✓	✓	✓	✓
4.4	12000	90000	6	312			✓	✓	✓	✓	✓	✓
4.7	12000	90000	5	293			✓	✓	✓	✓	✓	✓
5.4	12000	90000	6	259			✓	✓	✓	✓	✓	✓
7	12000	90000	6	198			✓	✓	✓	✓	✓	✓
8.4	12000	90000	6	166			✓	✓	✓	✓	✓	✓

F157, n_e = 1400 min^{-1} — **20000 Nm**

n_a min^{-1}	M_{amax} Nm	F_{Ra} N	$\varphi_{(/R)}$	i	DRN 132L 160L 160M	DRN 180L 180M	DRN 200L 225M 225S	DRN 250M 280M 280S	DRN 315M 315S	DRN 315H 315L
						3				
5.2	20000	93800	5	267.43	✓					
6.4	20000	93800	5	217.62*	✓	✓				
7.8	20000	93800	5	178.20*	✓	✓	✓			
8.5	20000	93800	5	162.96	✓	✓	✓			
9.8	20000	93800	5	141.80*	✓	✓	✓	✓		
11	20000	93800	5	125.14	✓	✓	✓	✓		
12	20000	93800	5	108.49	✓	✓	✓	✓	✓	
14	20000	93800	5	96.53*	✓	✓	✓	✓	✓	
16	20000	91800	5	85.80*	✓	✓	✓			
17	20000	88300	5	78.46	✓	✓	✓			
20	20000	83000	5	68.28*	✓	✓	✓	✓		
23	20000	78500	5	60.25	✓	✓	✓	✓		
26	20000	73600	5	52.24	✓	✓	✓	✓	✓	

F157, n_e = 1400 min^{-1}

n_a min^{-1}	M_{amax} Nm	F_{Ra} N	$\varphi_{(/R)}$	i	DRN 132L 160L 160M	DRN 180L 180M	DRN 200L 225M 225S	DRN 250M 280M 280S	DRN 315M 315S	DRN 315H 315L 20000 Nm
30	20000	69600	5	46.48*	✓	✓	✓	✓	✓	
34	20000	64900	5	40.06	✓	✓	✓	✓	✓	✓
43	20000	58500	5	32.55		✓	✓	✓	✓	✓
50	20000	53800	5	27.60			✓	✓	✓	✓
						2				
26	11000	92400	4	53.55	✓					
31	11900	84000	4	43.94*	✓	✓				
39	13600	74100	4	35.75*	✓	✓	✓			
48	19100	56600	4	28.60*	✓	✓	✓	✓		
55	20000	51500	4	25.43	✓	✓	✓	✓		
63	19900	48000	4	22.16	✓	✓	✓	✓	✓	
70	19400	46100	4	19.77	✓	✓	✓	✓	✓	
83	18700	43500	5	16.85	✓	✓	✓	✓	✓	✓
100	17900	40700	5	13.96		✓	✓	✓	✓	✓
117	17300	38300	5	11.92			✓	✓	✓	✓

F157R97, n_e = 1400 min^{-1}

n_a min^{-1}	M_{amax} Nm	F_{Ra} N	$\varphi_{(/R)}$	i	DRN 71M 71MS 80MK 80MS	DRN 80M 90S	DRN 90L	DRN 100L 100LM 100LS	DRN 112M	DRN 132M 132S	DRN 132L 160L 160M	DRN 180L 180M	DRN 200L 225S 20000 Nm
						3	3						
0.04	20000	93800	5	31434	✓	✓							
0.05	20000	93800	5	26173	✓	✓	✓						
0.05	20000	93800	5	23464	✓	✓	✓	✓					
0.06	20000	93800	5	20212	✓	✓	✓	✓	✓				
0.07	20000	93800	5	17984	✓	✓	✓	✓	✓				
0.08	20000	93800	5	16358	✓	✓	✓	✓	✓	✓			
0.1	20000	93800	5	13751	✓	✓	✓	✓	✓	✓			
0.11	20000	93800	5	12235	✓	✓	✓	✓	✓	✓			
0.13	20000	93800	5	10033		✓	✓	✓	✓	✓	✓	✓	
0.15	20000	93800	5	9021		✓	✓	✓	✓	✓	✓	✓	
0.17	20000	93800	5	8026		✓	✓	✓	✓	✓	✓	✓	
0.19	20000	93800	5	7075	✓	✓	✓	✓	✓	✓			
0.22	20000	93800	5	6295	✓	✓	✓	✓	✓	✓			
0.25	20000	93800	5	5404	✓	✓	✓	✓	✓	✓	✓		
0.28	20000	93800	5	4831		✓	✓	✓	✓	✓	✓	✓	
0.33	20000	93800	5	4130		✓	✓	✓	✓	✓	✓	✓	
0.38	20000	93800	5	3607				✓	✓	✓	✓	✓	✓
0.43	20000	93800	5	3210				✓	✓	✓	✓	✓	✓
0.5	20000	93800	5	2780	✓	✓	✓	✓	✓	✓	✓		
0.97	20000	93800	5	1441				✓	✓	✓	✓	✓	✓
						3	2						
0.57	20000	93800	5	2427	✓	✓	✓	✓	✓	✓	✓		
0.64	20000	93800	5	2185		✓	✓	✓	✓	✓	✓	✓	
0.72	20000	93800	5	1944		✓	✓	✓	✓	✓	✓	✓	
0.83	20000	93800	5	1674	✓	✓	✓	✓	✓	✓			
1	20000	93800	5	1308	✓	✓	✓	✓	✓	✓	✓		
1.1	20000	93800	5	1169	✓	✓	✓	✓	✓	✓	✓		

F157R97, n_e = 1400 min^{-1}

n_a min^{-1}	M_{amax} Nm	F_{Ra} N	$\varphi_{(/R)}$	i	DRN 71M 71MS 80MK 80MS	DRN 80M 90S	DRN 90L	DRN 100L 100LM 100LS	DRN 112M	DRN 132M 132S	DRN 132L 160L 160M	DRN 180L 180M	20000 Nm DRN 200L 225S
1.4	20000	93800	5	953		✓	✓	✓	✓	✓	✓	✓	
1.6	20000	93800	5	845		✓	✓	✓	✓	✓	✓	✓	✓
1.8	20000	93800	5	764				✓	✓	✓	✓	✓	✓
2	20000	93800	5	680				✓	✓	✓	✓	✓	✓
2.4	20000	93800	5	576				✓	✓	✓	✓	✓	✓
2.7	20000	93800	5	503						✓	✓	✓	✓
3.1	20000	93800	5	446		✓	✓	✓	✓	✓	✓	✓	✓
3.9	20000	93800	5	353						✓	✓	✓	✓
4.6	20000	93800	5	302		✓	✓	✓	✓	✓	✓	✓	✓
5.1	20000	93800	5	273				✓	✓	✓	✓	✓	✓
6	20000	93800	5	232				✓	✓	✓	✓	✓	✓
6.9	20000	93800	5	202						✓	✓	✓	✓
7.1	20000	93800	5	197				✓	✓	✓	✓	✓	✓

4.3.2 Selection tables F..DRN.. in kW

P_N = 0.12 kW

n_a min^{-1}	M_a Nm	i	F_{Ra} N	SEW f_B	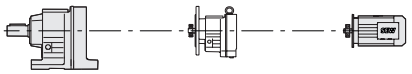			m kg
0.06	13900	22323	86700	0.85				
0.07	11900	19048	90000	1.00	**FA127**			425
0.08	10400	16656	90000	1.15	**FAF127**	**R77**	**DRN63MS4**	465
0.09	9180	14722	90000	1.30	**F127**			460
0.11	8000	12912	90000	1.50	**FF127**			510
0.12	7050	11656	90000	1.70				
0.14	6310	10191	90000	1.90				
0.09	9210	14767	45500	0.85				
0.12	7080	11348	51400	1.10				
0.14	5750	10039	54600	1.35				
0.16	4680	8548	57000	1.65	**FA107**			275
0.18	4750	7674	56800	1.60	**FAF107**	**R77**	**DRN63MS4**	295
0.20	4090	6767	58200	1.90	**F107**			290
0.23	3470	5954	59500	2.2	**FF107**			320
0.26	2990	5223	60400	2.6				
0.30	2850	4567	60700	2.7				
0.39	2130	3521	62000	3.6				
0.21	4150	6469	30300	1.05	**FA97**			185
0.25	3820	5615	31300	1.15	**FAF97**	**R57**	**DRN63MS4**	205
0.28	3320	4961	32500	1.30	**F97**			190
0.32	2900	4333	33500	1.50	**FF97**			225
0.35	2690	3906	34000	1.60	**FA97**			185
0.41	2320	3352	34800	1.85	**FAF97**	**R57**	**DRN63MS4**	205
0.47	1920	2907	35500	2.2	**F97**			190
0.54	1760	2553	35800	2.4	**FF97**			225
					FA87			120
0.33	2770	4245	23800	1.10	**FAF87**	**R57**	**DRN63MS4**	130
0.37	2220	3721	25800	1.35	**F87**			125
					FF87			140
0.43	2250	3244	25700	1.35				
0.48	1990	2881	26500	1.50				
0.54	1780	2576	27100	1.70				
0.63	1520	2199	27800	2.0	**FA87**			115
0.72	1310	1930	28300	2.3	**FAF87**	**R57**	**DRN63MS4**	130
0.81	1180	1709	28600	2.6	**F87**			125
0.92	1030	1493	28900	2.9	**FF87**			140
1.1	820	1300	29300	3.7				
1.2	745	1148	29500	4.0				
					FA77			66
0.53	1820	2613	13000	0.80	**FAF77**	**R37**	**DRN63MS4**	72
0.60	1570	2284	15200	0.95	**F77**			69
0.68	1390	2029	16400	1.10	**FF77**			80
0.80	1180	1728	17500	1.25				
0.89	1090	1544	17900	1.40				
1.0	960	1354	18500	1.55	**FA77**			65
1.2	850	1200	18800	1.75	**FAF77**	**R37**	**DRN63MS4**	72
1.3	745	1053	19100	2.0	**F77**			69
1.5	635	910	19400	2.4	**FF77**			80
1.7	530	810	19600	2.8				
1.9	465	710	19800	3.2				

P_N = 0.12 kW

n_a min^{-1}	M_a Nm	i	F_{Ra} N	SEW f_B	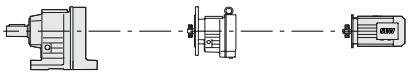			m kg
0.97	960	1429	7070	0.90				
1.1	870	1271	9840	1.00				
1.3	725	1102	11100	1.20				
1.4	640	970	11700	1.35	**FA67**			43
1.6	560	858	12100	1.55	**FAF67**	**R37**	**DRN63MS4**	49
1.8	495	755	12400	1.75	**F67**			46
2.2	420	641	12700	2.1	**FF67**			52
2.4	390	572	12800	2.2				
2.7	330	509	13000	2.6				
3.2	290	437	13000	3.0				
1.6	615	851	9100	1.05				
1.9	525	738	9750	1.20	**FA57**			39
2.1	455	646	10200	1.40	**FAF57**	**R37**	**DRN63MS4**	45
2.5	390	558	10600	1.60	**F57**			39
2.7	345	506	10900	1.80	**FF57**			46
3.1	300	452	11100	2.1				
3.2	310	426	11100	2.0	**FA57**			39
3.6	275	382	11300	2.3	**FAF57**			44
4.2	235	330	11500	2.7	**F57**	**R37**	**DRN63MS4**	39
4.6	210	298	11500	3.0	**FF57**			45
5.3	185	262	11500	3.4				
1.7	555	809	7910	0.80	**FA47**			24
2.5	385	543	9010	1.15	**FAF47**	**R17**	**DRN63MS4**	27
2.9	335	475	9370	1.35	**F47**			25
3.3	290	419	9650	1.55	**FF47**			28
2.6	380	524	9050	1.20				
2.8	355	489	9240	1.30	**FA47**			24
3.2	305	427	9550	1.50	**FAF47**			26
3.6	270	381	9690	1.65	**F47**	**R17**	**DRN63MS4**	24
4.1	235	334	9690	1.90	**FF47**			27
4.7	205	295	9690	2.2				
5.5	172	253	9690	2.6				
4.3	220	322	3990	1.05	**FA37**			19
5.0	192	278	4400	1.20	**FAF37**	**R17**	**DRN63MS4**	21
5.7	162	242	4750	1.40	**F37**			20
6.3	156	221	4820	1.50	**FF37**			22
4.2	235	326	3710	1.00				
4.9	205	285	4250	1.15	**FA37**			19
5.5	177	250	4590	1.30	**FAF37**	**R17**	**DRN63MS4**	21
6.3	156	219	4820	1.40	**F37**			20
7.4	132	186	5040	1.65	**FF37**			22
8.3	118	167	5140	1.75				
6.3	155	221	4500	0.85	**FA27**			13
8.0	119	172	4500	1.10	**FAF27**	**R17**	**DRN63MS4**	14
9.1	104	153	4500	1.25	**F27**			14
11	87	130	4500	1.50	**FF27**			15
6.5	150	211	4500	0.85				
7.4	131	186	4500	1.00	**FA27**			13
9.7	102	142	4500	1.25	**FAF27**	**R17**	**DRN63MS4**	14
11	88	124	4500	1.45	**F27**			14
13	77	109	4500	1.70	**FF27**			14
14	67	96	4500	1.95				

P_N = 0.12 kW

n_a min^{-1}	M_a Nm	i	F_{Ra} N	SEW f_B	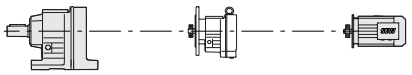			m kg
3.8	300	228.99	13000	2.9	**FA67**	-	**DRN63M6**	33
4.5	255	195.39	13000	3.4	**FAF67**			39
5.1	225	170.85	13000	3.9	**F67**			36
5.4	215	162.31	13000	4.1	**FF67**			42
6.1	188	142.40	13000	4.6				
4.4	265	199.70	11300	2.4	**FA57**	-	**DRN63M6**	29
4.7	240	183.60	11400	2.6	**FAF57**			34
5.5	205	157.09	11500	3.0	**F57**			29
6.4	179	136.16	11500	3.5	**FF57**			36
6.8	168	127.27	11500	3.8				
6.9	166	199.70	11500	3.8	**FA57**	-	**DRN63MS4**	28
7.5	152	183.60	11500	4.1	**FAF57**			34
8.8	130	157.09	11500	4.8	**F57**			28
10	113	136.16	11500	5.6	**FF57**			35
4.6	250	190.76	9690	1.80				
5.0	230	175.38	9690	1.95				
5.8	198	150.06	9690	2.3	**FA47**	-	**DRN63M6**	22
6.7	171	130.07	9690	2.6	**FAF47**			25
7.2	160	121.57	9690	2.8	**F47**			23
8.3	138	105.09	9690	3.3	**FF47**			26
9.7	118	89.29	9690	3.8				
11	105	79.72	9690	4.3				
7.2	158	190.76	9690	2.8	**FA47**	-	**DRN63MS4**	21
7.9	146	175.38	9690	3.1	**FAF47**			24
9.2	125	150.06	9690	3.6	**F47**			22
11	108	130.07	9690	4.2	**FF47**			25
6.8	169	128.51	4680	1.35	**FA37**	-	**DRN63M6**	17
7.4	155	117.88	4830	1.50	**FAF37**			19
8.7	132	100.36	5030	1.75	**F37**			17
10	114	86.53	5170	2.0	**FF37**			19
11	106	80.65	5220	2.2				
11	107	128.51	5220	2.2	**FA37**	-	**DRN63MS4**	16
12	98	117.88	5270	2.4	**FAF37**			18
14	83	100.36	5340	2.8	**F37**			17
16	72	86.53	5390	3.2	**FF37**			19
17	67	80.65	5410	3.4				
7.9	145	109.90	4500	0.90	**FA27**	-	**DRN63M6**	11
9.2	125	94.76	4500	1.05	**FAF27**			12
9.9	116	88.32	4500	1.10	**F27**			11
11	102	77.21	4500	1.30	**FF27**			12
9.8	117	140.74	4500	1.10				
11	107	129.09	4500	1.20				
13	91	109.90	4500	1.40				
15	79	94.76	4500	1.65				
16	73	88.32	4500	1.75				
18	64	77.21	4500	2.0	**FA27**	-	**DRN63MS4**	10
19	60	72.37	4500	2.2	**FAF27**			11
22	53	63.86	4500	2.5	**F27**			11
24	47	56.62	4500	2.8	**FF27**			11
28	42	50.19	4500	3.1				
30	39	46.78	4500	3.4				
34	34	40.89	4500	3.8				
36	32	38.33	4430	4.1				
41	28	33.83	4270	4.6				

P_N = 0.12 kW

n_a min^{-1}	M_a Nm	i	F_{Ra} N	SEW f_B	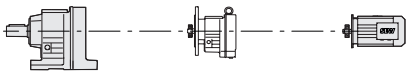			m kg
47	25	29.56	4100	5.3	**FA27** **FAF27** **F27** **FF27**	-	**DRN63MS4**	9.8 11 10 11
51	23	27.18	4000	5.8				
59	19	23.25	3820	6.7				
68	17	20.15	3650	7.8				
73	16	18.84	3580	8.3				
85	14	16.28	3420	9.6				
100	11	13.84	3250	11				
112	10	12.35	3140	12				
131	8.8	10.55	2990	14				
140	8.2	9.88	2930	15				
147	7.8	9.40	2870	16				
170	6.8	8.13	2740	18				
200	5.7	6.91	2600	19				
224	5.1	6.17	2510	21				
262	4.4	5.27	2390	22				
280	4.1	4.93	2340	23				
332	3.5	4.16	2210	25				

P_N = 0.18 kW

n_a min^{-1}	M_a Nm	i	F_{Ra} N	SEW f_B	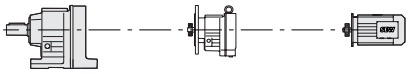			m kg
0.11	13000	12912	88400	0.90				
0.12	11600	11656	90000	1.05	**FA127**	**R77**	**DRN63M4**	425
0.13	10300	10191	90000	1.15	**FAF127**			465
0.16	8510	8831	90000	1.40	**F127**			465
0.18	7360	7643	90000	1.65	**FF127**			510
0.20	6810	6715	90000	1.75				
0.16	8020	8548	48900	0.95				
0.18	7750	7674	49600	1.00				
0.20	6740	6767	52200	1.15	**FA107**			275
0.23	5790	5954	54500	1.35	**FAF107**	**R77**	**DRN63M4**	295
0.26	5030	5223	56200	1.55	**F107**			290
0.30	4630	4567	57100	1.65	**FF107**			320
0.39	3500	3521	59400	2.2				
0.45	3110	3037	60200	2.5	**FA107**			275
0.50	2820	2756	60700	2.7	**FAF107**	**R77**	**DRN63M4**	295
0.58	2420	2369	61400	3.2	**F107**			290
0.66	2110	2068	62000	3.6	**FF107**			320
0.32	4590	4333	29000	0.95	**FA97** **FAF97** **F97** **FF97**	**R57**	**DRN63M4**	185 205 190 225
0.35	4230	3906	30100	1.00				
0.41	3650	3352	31700	1.20				
0.47	3070	2907	33200	1.40				
0.54	2770	2553	33800	1.55	**FA97**			185
0.61	2430	2245	34500	1.75	**FAF97**	**R57**	**DRN63M4**	205
0.70	2110	1970	35200	2.0	**F97**			190
0.80	1870	1722	35600	2.3	**FF97**			225
0.90	1660	1527	36000	2.6				
1.0	1360	1327	36500	3.2				
1.2	1270	1171	36600	3.4				

P_N = 0.18 kW

n_a min^{-1}	M_a Nm	i	F_{Ra} N	SEW f_B	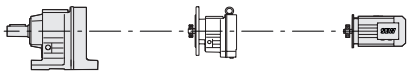			m kg
0.53	2800	2576	23700	1.05				
0.63	2380	2199	25200	1.25				
0.71	2070	1930	26200	1.45				
0.80	1850	1709	26900	1.60	**FA87**			120
0.92	1620	1493	27500	1.85	**FAF87**	**R57**	**DRN63M4**	130
1.1	1330	1300	28200	2.3	**F87**			125
1.2	1200	1148	28500	2.5	**FF87**			140
1.4	1040	1010	28900	2.9				
1.6	930	887	29100	3.2				
1.8	800	780	29400	3.8				
0.89	1700	1544	14200	0.90				
1.0	1490	1354	15800	1.00				
1.2	1320	1200	16800	1.15	**FA77**			66
1.3	1160	1053	17600	1.30	**FAF77**	**R37**	**DRN63M4**	73
1.5	990	910	18300	1.50	**F77**			70
1.7	850	810	18800	1.75	**FF77**			81
1.9	745	710	19100	2.0				
2.2	665	615	19400	2.3				
1.6	900	858	9530	0.95				
1.8	790	755	10600	1.10				
2.2	670	641	11500	1.30	**FA67**			44
2.4	620	572	11800	1.40	**FAF67**	**R37**	**DRN63M4**	50
2.7	535	509	12300	1.65	**F67**			47
3.2	460	437	12600	1.90	**FF67**			53
3.6	415	384	12800	2.1				
2.8	555	500	12200	1.55				
3.0	505	454	12400	1.70				
3.5	435	392	12700	2.0	**FA67**			43
4.1	365	333	12900	2.4	**FAF67**	**R37**	**DRN63M4**	49
4.6	320	297	13000	2.7	**F67**			46
5.3	280	261	13000	3.1	**FF67**			52
5.8	255	238	13000	3.5				
6.9	210	200	13000	4.2				
2.5	610	558	9120	1.05				
2.7	545	506	9600	1.15	**FA57**			40
3.0	475	452	10100	1.30	**FAF57**	**R37**	**DRN63M4**	46
3.6	405	386	10500	1.55	**F57**			40
4.1	355	338	10800	1.80	**FF57**			47
3.2	480	426	10100	1.30				
3.6	425	382	10400	1.50				
4.2	365	330	10800	1.75	**FA57**			39
4.6	330	298	11000	1.90	**FAF57**	**R37**	**DRN63M4**	45
5.2	290	262	11200	2.2	**F57**			40
6.1	245	226	11400	2.6	**FF57**			46
6.9	215	200	11500	3.0				
2.9	520	475	8130	0.85				
3.7	395	370	8960	1.15	**FA47**			25
4.3	360	324	9190	1.25	**FAF47**	**R17**	**DRN63M4**	28
4.8	310	288	9500	1.45	**F47**			26
5.5	265	249	9690	1.70	**FF47**			29

P_N = 0.18 kW

n_a min^{-1}	M_a Nm	i	F_{Ra} N	SEW f_B	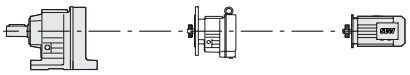			m kg
2.8	550	489	7950	0.80				
4.1	370	334	9120	1.20				
4.7	325	295	9430	1.40	**FA47**			24
5.4	275	253	9690	1.65	**FAF47**			27
6.3	245	217	9690	1.85	**F47**	**R17**	**DRN63M4**	25
7.2	210	190	9690	2.1	**FF47**			28
7.7	197	178	9690	2.3				
7.4	205	186	4200	1.05	**FA37**			20
8.2	185	167	4490	1.10	**FAF37**	**R17**	**DRN63M4**	22
9.5	164	145	4740	1.40	**F37**			21
11	145	129	4930	1.60	**FF37**			22
9.7	159	142	4500	0.80	**FA27**			14
11	138	124	4500	0.95	**FAF27**	**R17**	**DRN63M4**	15
13	120	109	4500	1.10	**F27**			14
14	105	96	4500	1.25	**FF27**			15
3.3	530	281.71	19600	2.8	**FA77**			57
3.5	495	262.93	19700	3.0	**FAF77**	-	**DRN71MS6**	64
4.1	425	225.79	19800	3.5	**F77**			61
					FF77			72
4.0	430	228.99	12700	2.0	**FA67**			33
4.7	365	195.39	12900	2.4	**FAF67**	-	**DRN71MS6**	40
5.4	320	170.85	13000	2.7	**F67**			36
					FF67			42
6.0	285	228.99	13000	3.0	**FA67**			33
7.0	245	195.39	13000	3.6	**FAF67**	-	**DRN63M4**	39
8.1	215	170.85	13000	4.1	**F67**			36
					FF67			42
4.6	375	199.70	10700	1.70				
5.0	345	183.60	10900	1.85	**FA57**			30
5.8	295	157.09	11200	2.1	**FAF57**	-	**DRN71MS6**	35
6.7	255	136.16	11400	2.5	**F57**			30
7.2	240	127.27	11500	2.6	**FF57**			36
8.3	205	110.01	11500	3.1				
6.9	250	199.70	11400	2.5	**FA57**			29
7.5	230	183.60	11500	2.7	**FAF57**	-	**DRN63M4**	34
8.8	196	157.09	11500	3.2	**F57**			29
10	170	136.16	11500	3.7	**FF57**			36
11	159	127.27	11500	4.0				
4.8	360	190.76	9200	1.25	**FA47**			22
5.2	330	175.38	9390	1.35	**FAF47**	-	**DRN71MS6**	25
6.1	280	150.06	9690	1.60	**F47**			23
7.0	245	130.07	9690	1.85	**FF47**			26
7.5	230	121.57	9690	1.95				
7.2	240	190.76	9690	1.90	**FA47**			22
7.8	220	175.38	9690	2.1	**FAF47**	-	**DRN63M4**	25
9.2	188	150.06	9690	2.4	**F47**			23
11	152	121.57	9690	3.0	**FF47**			26
11	163	130.07	9690	2.8				
7.8	220	117.88	3960	1.05	**FA37**			18
9.1	189	100.36	4450	1.20	**FAF37**	-	**DRN71MS6**	19
11	152	80.65	4860	1.50	**F37**			18
11	163	86.53	4750	1.40	**FF37**			20
13	132	70.50	5030	1.75				

P_N = 0.18 kW

n_a min^{-1}	M_a Nm	i	F_{Ra} N	SEW f_B	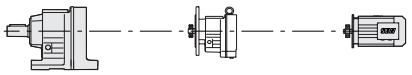			m kg
11	161	128.51	4770	1.45				
12	147	117.88	4900	1.55				
14	125	100.36	5090	1.85	**FA37**			17
16	108	86.53	5210	2.1	**FAF37**	-	**DRN63M4**	19
17	101	80.65	5250	2.3	**F37**			17
20	88	70.50	5320	2.6	**FF37**			19
21	83	66.09	5350	2.8				
24	73	58.32	5390	3.2				
13	137	109.90	4500	0.95				
15	118	94.76	4500	1.10				
16	110	88.32	4500	1.20				
18	97	77.21	4500	1.35				
19	90	72.37	4500	1.45	**FA27**			11
22	80	63.86	4500	1.65	**FAF27**	-	**DRN63M4**	12
24	71	56.62	4500	1.85	**F27**			11
27	63	50.19	4500	2.1	**FF27**			12
29	58	46.78	4500	2.2				
34	51	40.89	4370	2.5				
36	48	38.33	4290	2.7				
41	42	33.83	4150	3.1				
47	37	29.56	4000	3.5				
51	34	27.18	3900	3.8				
59	29	23.25	3730	4.5				
68	25	20.15	3580	5.2				
73	24	18.84	3510	5.5				
84	20	16.28	3370	6.4				
99	17	13.84	3200	7.5				
111	15	12.35	3100	8.4	**FA27**			11
130	13	10.55	2950	9.9	**FAF27**	-	**DRN63M4**	11
139	12	9.88	2890	10	**F27**			11
146	12	9.40	2840	11	**FF27**			12
169	10	8.13	2710	12				
199	8.6	6.91	2580	13				
223	7.7	6.17	2490	14				
261	6.6	5.27	2370	15				
279	6.2	4.93	2320	15				
331	5.2	4.16	2200	16				
335	5.1	8.13	2190	23				
395	4.4	6.91	2080	26	**FA27**			9.8
442	3.9	6.17	2000	28	**FAF27**	-	**DRN63MS2**	11
517	3.3	5.27	1910	30	**F27**			10
552	3.1	4.93	1870	30	**FF27**			11
656	2.6	4.16	1770	33				

P_N = 0.25 kW

n_a min^{-1}	M_a Nm	i	F_{Ra} N	SEW f_B	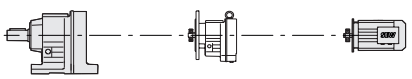			m kg
					FA157			770
0.08	22600	17984	74600	0.90	**FAF157**	**R97**	**DRN71MS4**	820
0.09	20500	16358	91900	0.95	**F157**			790
					FF157			890

P_N = 0.25 kW

n_a min^{-1}	M_a Nm	i	F_{Ra} N	SEW f_B	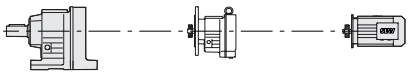			m kg
0.16	12200	8831	90000	1.00				
0.18	10500	7643	90000	1.15	**FA127**			425
0.21	9610	6715	90000	1.25	**FAF127**	**R77**	**DRN71MS4**	465
0.24	8480	5925	90000	1.40	**F127**			465
0.27	7280	5153	90000	1.65	**FF127**			510
0.31	6300	4533	90000	1.90				
0.24	8270	5954	48200	0.95	**FA107**			275
0.27	7210	5223	51000	1.05	**FAF107**	**R77**	**DRN71MS4**	295
0.31	6540	4567	52700	1.15	**F107**			295
0.40	4970	3521	56400	1.55	**FF107**			320
0.46	4390	3037	57600	1.75				
0.51	3980	2756	58500	1.95	**FA107**			275
0.59	3420	2369	59600	2.2	**FAF107**	**R77**	**DRN71MS4**	295
0.68	2990	2068	60400	2.6	**F107**			290
0.88	2280	1597	61700	3.4	**FF107**			320
1.0	1970	1401	62200	3.9				
0.48	4300	2907	29900	1.00				
0.55	3850	2553	31200	1.10				
0.63	3380	2245	32400	1.25				
0.71	2950	1970	33400	1.45	**FA97**			185
0.82	2600	1722	34200	1.65	**FAF97**	**R57**	**DRN71MS4**	205
0.92	2310	1527	34800	1.85	**F97**			190
1.1	1920	1327	35500	2.2	**FF97**			225
1.2	1770	1171	35800	2.4				
1.4	1540	1022	36200	2.8				
0.73	2890	1930	23400	1.05				
0.82	2580	1709	24500	1.15				
0.94	2250	1493	25600	1.35				
1.1	1880	1300	26800	1.60	**FA87**			120
1.2	1680	1148	27300	1.80	**FAF87**	**R57**	**DRN71MS4**	130
1.4	1460	1010	27900	2.1	**F87**			125
1.6	1300	887	28300	2.3	**FF87**			140
1.8	1130	780	28700	2.7				
2.1	960	674	29100	3.1				
1.3	1600	1053	15000	0.95				
1.5	1380	910	16500	1.10				
1.7	1190	810	17500	1.25	**FA77**			67
2.0	1040	710	18100	1.45	**FAF77**	**R37**	**DRN71MS4**	73
2.3	920	615	18600	1.65	**F77**			71
2.6	810	538	19000	1.85	**FF77**			81
2.9	715	480	19200	2.1				
3.4	605	413	19500	2.5				
2.5	860	572	9940	1.00	**FA67**			45
2.8	750	509	10900	1.15	**FAF67**	**R37**	**DRN71MS4**	51
3.2	645	437	11600	1.35	**F67**			47
					FF67			53
2.8	765	500	10800	1.15				
3.1	700	454	11300	1.25				
3.6	600	392	11900	1.45	**FA67**			43
4.2	505	333	12400	1.70	**FAF67**	**R37**	**DRN71MS4**	50
4.7	450	297	12600	1.95	**F67**			46
5.4	395	261	12800	2.2	**FF67**			52
5.9	355	238	13000	2.5				

P_N = 0.25 kW

n_a min^{-1}	M_a Nm	i	F_{Ra} N	SEW f_B	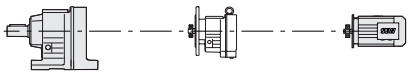			m kg
3.6	570	386	9420	1.10	**FA57**	**R37**	**DRN71MS4**	41
4.2	495	338	9950	1.25	**FAF57**			46
5.5	375	255	10700	1.65	**F57**			41
					FF57			47
3.7	590	382	9280	1.05				
4.3	505	330	9880	1.25	**FA57**	**R37**	**DRN71MS4**	40
4.7	455	298	10200	1.40	**FAF57**			46
5.4	400	262	10600	1.55	**F57**			40
6.2	340	226	10900	1.85	**FF57**			47
7.0	300	200	11100	2.1				
8.3	255	170	11400	2.5				
5.6	370	249	9120	1.20	**FA47**	**R17**	**DRN71MS4**	26
6.4	330	218	9390	1.35	**FAF47**			28
7.3	290	193	9650	1.55	**F47**			26
8.1	265	175	9690	1.70	**FF47**			30
5.6	380	253	9050	1.20				
6.5	335	217	9350	1.35	**FA47**	**R17**	**DRN71MS4**	25
7.4	290	190	9640	1.55	**FAF47**			28
7.9	275	178	9690	1.65	**F47**			26
9.4	230	149	9690	1.95	**FF47**			29
11	200	131	9690	2.3				
9.7	225	145	3880	1.00	**FA37**	**R17**	**DRN71MS4**	21
11	200	129	4300	1.15	**FAF37**			22
12	182	118	4530	1.25	**F37**			21
14	151	98	4870	1.55	**FF37**			23
16	132	87	5030	1.75				
3.3	735	281.71	19200	2.0	**FA77**	-	**DRN71M6**	59
3.5	685	262.93	19300	2.2	**FAF77**			65
4.1	590	225.79	19500	2.6	**F77**			63
4.6	515	198.31	19700	2.9	**FF77**			73
4.9	490	188.40	19700	3.1				
4.0	595	228.99	11900	1.45	**FA67**	-	**DRN71M6**	35
4.7	510	195.39	12400	1.70	**FAF67**			41
5.4	445	170.85	12600	1.95	**F67**			37
5.6	425	162.31	12700	2.1	**FF67**			44
6.4	370	142.40	12900	2.3				
6.1	390	228.99	12800	2.2	**FA67**	-	**DRN71MS4**	33
7.2	330	195.39	13000	2.6	**FAF67**			40
8.2	290	170.85	13000	3.0	**F67**			36
8.7	275	162.31	13000	3.2	**FF67**			42
9.9	240	142.40	13000	3.6				
4.6	520	199.70	9780	1.20				
5.0	480	183.60	10100	1.30	**FA57**	-	**DRN71M6**	31
5.8	410	157.09	10500	1.55	**FAF57**			36
6.7	355	136.16	10800	1.75	**F57**			31
7.2	330	127.27	11000	1.90	**FF57**			37
8.3	285	110.01	11200	2.2				
7.0	340	199.70	10900	1.85				
7.7	310	183.60	11100	2.0	**FA57**	-	**DRN71MS4**	30
8.9	265	157.09	11300	2.4	**FAF57**			35
10	230	136.16	11500	2.7	**F57**			30
11	215	127.27	11500	2.9	**FF57**			36
13	187	110.01	11500	3.4				

P_N = 0.25 kW

n_a min^{-1}	M_a Nm	i	F_{Ra} N	SEW f_B	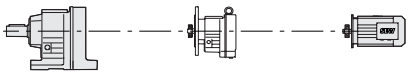			m kg
6.1	390	150.06	8980	1.15	**FA47**	-	**DRN71M6**	24
7.0	340	130.07	9330	1.35	**FAF47**			26
7.5	315	121.57	9470	1.40	**F47**			24
8.7	275	105.09	9690	1.65	**FF47**			28
7.4	325	190.76	9430	1.40				
8.0	300	175.38	9600	1.50	**FA47**	-	**DRN71MS4**	22
9.4	255	150.06	9690	1.75	**FAF47**			25
11	220	130.07	9690	2.0	**F47**			23
12	205	121.57	9690	2.2	**FF47**			26
13	179	105.09	9690	2.5				
16	152	89.29	9690	3.0				
11	220	128.51	4010	1.05				
12	200	117.88	4290	1.15				
14	171	100.36	4670	1.35				
16	147	86.53	4910	1.55				
17	137	80.65	4990	1.70				
20	120	70.50	5130	1.90				
21	112	66.09	5180	2.1	**FA37**	-	**DRN71MS4**	18
24	99	58.32	5260	2.3	**FAF37**			19
26	93	54.54	5300	2.5	**F37**			18
27	88	51.70	5320	2.6	**FF37**			20
30	80	47.02	5360	2.9				
32	74	43.83	5380	3.1				
37	65	38.31	5420	3.5				
39	61	35.91	5440	3.8				
44	54	31.69	5460	4.3				
18	131	77.21	4500	1.00				
19	123	72.37	4500	1.05				
22	109	63.86	4500	1.20				
25	96	56.62	4480	1.35	**FA27**	-	**DRN71MS4**	11
28	85	50.19	4370	1.50	**FAF27**			12
30	79	46.78	4300	1.65	**F27**			12
34	69	40.89	4170	1.85	**FF27**			13
37	65	38.33	4100	2.0				
42	57	33.83	3980	2.3				
48	50	29.56	3850	2.6				
52	46	27.18	3770	2.8				
60	40	23.25	3610	3.3				
70	34	20.15	3480	3.8				
75	32	18.84	3410	4.1				
86	28	16.28	3270	4.7				
102	24	13.84	3130	5.5				
114	21	12.35	3020	6.2	**FA27**	-	**DRN71MS4**	11
133	18	10.55	2890	7.3	**FAF27**			12
142	17	9.88	2830	7.7	**F27**			12
149	16	9.40	2770	8.1	**FF27**			13
173	14	8.13	2660	8.9				
203	12	6.91	2530	9.7				
228	10	6.17	2440	10				
267	9	5.27	2330	11				
285	8.4	4.93	2280	11				
338	7.1	4.16	2160	12				

P_N = 0.25 kW

n_a min^{-1}	M_a Nm	i	F_{Ra} N	SEW f_B	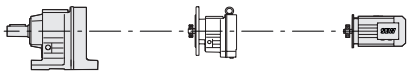			m kg
339	7	8.13	2160	17				
399	6	6.91	2050	19	**FA27**			11
447	5.3	6.17	1980	20	**FAF27**	-	**DRN63M2**	11
523	4.6	5.27	1890	21	**F27**			11
558	4.3	4.93	1850	22	**FF27**			12
663	3.6	4.16	1750	24				

P_N = 0.37 kW

n_a min^{-1}	M_a Nm	i	F_{Ra} N	SEW f_B	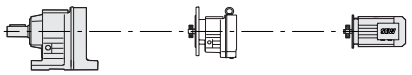			m kg
0.12	24300	12235	0	0.80	**FA157** **FAF157** **F157** **FF157**	**R97**	**DRN71M4**	770 830 790 890
0.21	14600	6715	85400	0.80				
0.24	12900	5925	88700	0.95				
0.27	11100	5153	90000	1.10	**FA127** **FAF127** **F127** **FF127**	**R77**	**DRN71M4**	430 465 465 510
0.31	9660	4533	90000	1.25				
0.36	8460	3926	90000	1.40				
0.41	7360	3454	90000	1.65				
0.47	6430	3031	90000	1.85				
0.47	6670	3037	52400	1.15				
0.51	6050	2756	53900	1.25	**FA107** **FAF107** **F107** **FF107**	**R77**	**DRN71M4**	275 295 295 320
0.60	5200	2369	55900	1.50				
0.68	4540	2068	57300	1.70				
0.89	3480	1597	59500	2.2				
0.72	4430	1970	29500	0.95				
0.82	3890	1722	31100	1.10				
0.93	3450	1527	32200	1.25	**FA97** **FAF97** **F97** **FF97**	**R57**	**DRN71M4**	185 205 195 225
1.1	2920	1327	33500	1.45				
1.2	2650	1171	34100	1.60				
1.4	2310	1022	34800	1.85				
1.6	1950	898	35500	2.2				
1.1	2860	1300	23500	1.05				
1.2	2550	1148	24600	1.20				
1.4	2220	1010	25700	1.35				
1.6	1970	887	26500	1.55	**FA87** **FAF87** **F87** **FF87**	**R57**	**DRN71M4**	120 135 125 140
1.8	1720	780	27300	1.75				
2.1	1460	674	27900	2.1				
2.3	1340	609	28200	2.2				
2.8	1130	515	28700	2.7				
3.1	990	452	29000	3.0				
1.8	1800	810	13300	0.85				
2.0	1580	710	15200	0.95				
2.3	1380	615	16500	1.10	**FA77**			68
2.6	1210	538	17400	1.25	**FAF77**	**R37**	**DRN71M4**	75
3.0	1080	480	18000	1.40	**F77**			72
3.4	920	413	18600	1.65	**FF77**			82
3.9	820	367	18900	1.80				
4.4	730	323	19200	2.1				
3.7	860	384	9900	1.00				
4.2	765	338	10800	1.15	**FA67** **FAF67** **F67** **FF67**	**R37**	**DRN71M4**	46 52 49 55
4.7	685	305	11400	1.25				
5.5	575	257	12000	1.50				
6.1	510	231	12400	1.70				

P_N = 0.37 kW

n_a min^{-1}	M_a Nm	i	F_{Ra} N	SEW f_B	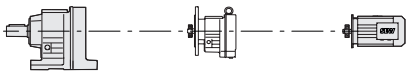			m kg
5.6	570	255	9440	1.10	**FA57**	**R37**	**DRN71M4**	42
7.0	445	201	10300	1.40	**FAF57**			47
7.8	400	181	10600	1.55	**F57**			42
					FF57			49
5.4	600	262	9190	1.05				
6.3	515	226	9830	1.25	**FA57**	**R37**	**DRN71M4**	41
7.1	450	200	10300	1.40	**FAF57**			47
8.3	385	170	10700	1.65	**F57**			41
9.3	340	152	10900	1.85	**FF57**			48
11	300	134	11100	2.1				
5.7	560	249	7880	0.80	**FA47**	**R17**	**DRN71M4**	27
8.1	395	175	8960	1.15	**FAF47**			30
9.6	330	147	9370	1.35	**F47**			28
11	295	130	9630	1.55	**FF47**			31
3.5	1020	270.68	28900	2.9	**FA87**	**-**	**DRN80MK6**	100
3.7	970	255.37	29000	3.1	**FAF87**			115
4.1	870	228.93	29200	3.5	**F87**			105
					FF87			120
4.1	850	225.79	18800	1.75	**FA77**	**-**	**DRN80MK6**	61
4.7	750	198.31	19100	2.0	**FAF77**			68
5.0	710	188.40	19200	2.1	**F77**			65
5.6	630	166.47	19400	2.4	**FF77**			76
6.6	540	142.27	19600	2.8				
5.0	705	281.71	19300	2.1	**FA77**	**-**	**DRN71M4**	59
5.4	655	262.93	19400	2.3	**FAF77**			65
6.3	565	225.79	19600	2.7	**F77**			63
7.1	495	198.31	19700	3.0	**FF77**			73
4.8	740	195.39	11000	1.20	**FA67**	**-**	**DRN80MK6**	37
5.5	645	170.85	11600	1.35	**FAF67**			43
5.8	615	162.31	11800	1.40	**F67**			40
6.6	540	142.40	12200	1.60	**FF67**			46
7.7	455	120.79	12600	1.90				
6.2	570	228.99	12100	1.50				
7.2	490	195.39	12500	1.80	**FA67**	**-**	**DRN71M4**	35
8.3	425	170.85	12700	2.0	**FAF67**			41
8.7	405	162.31	12800	2.2	**F67**			37
9.9	355	142.40	13000	2.5	**FF67**			44
12	300	120.79	13000	2.9				
6.0	595	157.09	9250	1.05	**FA57**	**-**	**DRN80MK6**	33
6.9	515	136.16	9820	1.20	**FAF57**			39
7.4	480	127.27	10100	1.30	**F57**			33
8.5	415	110.01	10500	1.50	**FF57**			40
7.1	500	199.70	9930	1.25				
7.7	460	183.60	10200	1.35				
9.0	390	157.09	10600	1.60	**FA57**	**-**	**DRN71M4**	31
10	340	136.16	10900	1.85	**FAF57**			36
11	320	127.27	11000	2.0	**F57**			31
13	275	110.01	11300	2.3	**FF57**			37
15	235	93.47	11500	2.7				
17	210	83.46	11500	3.0				

P_N = 0.37 kW

n_a min^{-1}	M_a Nm	i	F_{Ra} N	SEW f_B	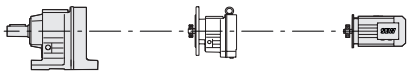			m kg
9.4	375	150.06	9090	1.20				
11	325	130.07	9420	1.40				
13	260	105.09	9690	1.70	**FA47**			24
16	225	89.29	9690	2.0	**FAF47**	-	**DRN71M4**	26
18	199	79.72	9690	2.3	**F47**			24
21	170	68.09	9690	2.7	**FF47**			28
22	163	65.36	9690	2.8				
16	215	86.53	4050	1.05				
18	200	80.65	4270	1.15				
20	176	70.50	4600	1.30				
21	165	66.09	4730	1.40				
24	146	58.32	4920	1.60				
26	136	54.54	5000	1.70	**FA37**			19
27	129	51.70	5060	1.80	**FAF37**	-	**DRN71M4**	20
30	117	47.02	5140	1.95	**F37**			19
32	109	43.83	5200	2.1	**FF37**			21
37	96	38.31	5280	2.4				
39	90	35.91	5310	2.6				
45	79	31.69	5270	2.9				
50	70	28.09	5110	3.3				
59	60	23.88	4900	3.9				
25	141	56.62	4070	0.90				
28	125	50.19	4000	1.05	**FA27**			13
30	117	46.78	3960	1.10	**FAF27**	-	**DRN71M4**	13
35	102	40.89	3870	1.25	**F27**			13
37	96	38.33	3820	1.35	**FF27**			14
42	84	33.83	3730	1.55				
48	74	29.56	3630	1.75				
52	68	27.18	3560	1.90				
61	58	23.25	3440	2.2				
70	50	20.15	3320	2.6				
75	47	18.84	3270	2.8				
87	41	16.28	3150	3.2				
102	35	13.84	3020	3.8				
115	31	12.35	2930	4.2	**FA27**			12
134	26	10.55	2810	4.9	**FAF27**	-	**DRN71M4**	13
143	25	9.88	2750	5.3	**F27**			13
150	23	9.40	2690	5.5	**FF27**			14
174	20	8.13	2590	6.1				
205	17	6.91	2470	6.6				
229	15	6.17	2390	7.1				
269	13	5.27	2280	7.6				
287	12	4.93	2240	7.8				
340	10	4.16	2130	8.4				
346	10	8.13	2120	12				
407	8.7	6.91	2010	13	**FA27**			11
456	7.8	6.17	1950	14	**FAF27**	-	**DRN71MS2**	12
533	6.6	5.27	1850	15	**F27**			12
570	6.2	4.93	1820	15	**FF27**			13
676	5.2	4.16	1720	16				

P_N = 0.55 kW

n_a min^{-1}	M_a Nm	i	F_{Ra} N	SEW f_B	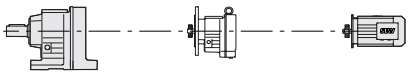			m kg
0.20	21700	7075	87400	0.90	**FA157**	**R97**	**DRN80MK4**	770
0.23	19300	6295	96200	1.05	**FAF157**			830
0.27	16100	5404	105500	1.25	**F157**			790
0.52	8270	2780	119500	2.4	**FF157**			900
0.59	7310	2427	120000	2.7	**FA157**	**R97**	**DRN80MK4**	770
0.86	5220	1674	120000	3.8	**FAF157**			820
1.1	4010	1308	120000	5.0	**F157**			790
1.2	3520	1169	120000	5.7	**FF157**			890
0.37	12700	3926	89100	0.95	**FA127**	**R77**	**DRN80MK4**	430
0.42	11100	3454	90000	1.10	**FAF127**			470
0.47	9710	3031	90000	1.25	**F127**			465
					FF127			510
0.61	7800	2369	49500	1.00				
0.69	6800	2068	52100	1.15				
0.79	5840	1826	54400	1.30				
0.90	5230	1597	55800	1.45	**FA107**	**R77**	**DRN80MK4**	280
1.0	4560	1401	57300	1.70	**FAF107**			300
1.2	3980	1243	58500	1.95	**F107**			295
1.3	3560	1087	59300	2.2	**FF107**			325
1.5	3040	950	60300	2.5				
1.7	2640	834	61000	2.9				
2.2	2060	640	62100	3.7				
1.1	4370	1327	29700	1.00				
1.2	3930	1171	31000	1.10				
1.4	3430	1022	32300	1.25				
1.6	2930	898	33500	1.45				
1.8	2600	784	34200	1.65	**FA97**	**R57**	**DRN80MK4**	190
2.1	2250	690	34900	1.90	**FAF97**			210
2.4	1990	605	35400	2.2	**F97**			195
2.7	1730	529	35900	2.5	**FF97**			230
3.1	1520	467	36200	2.8				
3.5	1310	406	36600	3.3				
4.0	1170	363	36800	3.7				
1.6	2940	887	22000	1.00				
1.8	2570	780	24600	1.15				
2.1	2200	674	25800	1.35	**FA87**	**R57**	**DRN80MK4**	120
2.4	2010	609	26400	1.50	**FAF87**			135
2.8	1690	515	27300	1.75	**F87**			130
3.2	1490	452	27800	2.0	**FF87**			145
4.2	1110	345	28700	2.7				
3.0	1600	480	15000	0.95	**FA77**	**R37**	**DRN80MK4**	70
3.5	1370	413	16500	1.10	**FAF77**			77
3.9	1220	367	17300	1.25	**F77**			74
4.5	1080	323	18000	1.40	**FF77**			85
5.6	860	257	9970	1.00	**FA67**	**R37**	**DRN80MK4**	48
6.2	760	231	10800	1.15	**FAF67**			54
7.0	680	205	11400	1.30	**F67**			51
8.2	580	175	12000	1.50	**FF67**			57
8.2	585	175	7700	0.75	**FA47**	**R17**	**DRN80MK4**	29
9.8	495	147	8310	0.90	**FAF47**			32
11	435	130	8690	1.05	**F47**			30
					FF47			33
					FA47	**R17**	**DRN80MK4**	28
9.6	505	149	8220	0.90	**FAF47**			31
11	445	131	8630	1.00	**F47**			29
					FF47			32

P_N = 0.55 kW

n_a min^{-1}	M_a Nm	i	F_{Ra} N	SEW f_B	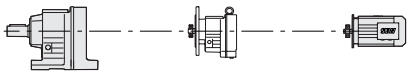			m kg
3.6	1470	270.68	27900	2.0	**FA87**	-	**DRN90SR6**	110
3.8	1390	255.37	28100	2.2	**FAF87**			120
4.2	1240	228.93	28400	2.4	**F87**			115
4.9	1070	197.20	28800	2.8	**FF87**			130
5.4	980	179.97	29000	3.1				
4.3	1230	225.79	17300	1.20				
4.9	1080	198.31	18000	1.40	**FA77**	-	**DRN90SR6**	69
5.1	1020	188.40	18200	1.45	**FAF77**			76
5.8	910	166.47	18700	1.65	**F77**			73
6.8	775	142.27	19100	1.95	**FF77**			84
7.4	710	130.42	19200	2.1				
6.4	830	225.79	18900	1.80				
7.2	725	198.31	19200	2.1				
7.6	690	188.40	19300	2.2	**FA77**	-	**DRN80MK4**	61
8.6	610	166.47	19500	2.5	**FAF77**			68
10	520	142.27	19700	2.9	**F77**			65
11	475	130.42	19700	3.1	**FF77**			76
13	395	108.46*	19900	3.8				
13	420	114.45	19800	3.6				
15	345	94.93	19900	4.3				
7.3	715	195.39	11200	1.20				
8.4	625	170.85	11700	1.40				
8.8	595	162.31	11900	1.45	**FA67**	-	**DRN80MK4**	37
10	520	142.40	12300	1.65	**FAF67**			43
12	440	120.79	12700	1.95	**F67**			40
13	400	109.04	12800	2.2	**FF67**			46
15	350	95.94	13000	2.5				
16	330	90.59	13000	2.6				
18	290	79.76	13000	3.0				
9.1	575	157.09	9390	1.10				
11	465	127.27	10200	1.35				
11	500	136.16	9930	1.25	**FA57**	-	**DRN80MK4**	33
13	405	110.01	10600	1.55	**FAF57**			39
15	340	93.47	10900	1.85	**F57**			33
17	305	83.46	11100	2.1	**FF57**			40
20	265	72.98	11300	2.4				
21	250	68.22	11400	2.5				
24	215	58.97	11500	2.9				
14	385	105.09	9030	1.15				
16	325	89.29	9410	1.40				
18	290	79.72	9550	1.55	**FA47**	-	**DRN80MK4**	26
21	250	68.09	9240	1.80	**FAF47**			29
22	240	65.36	9160	1.90	**F47**			27
25	205	56.49	8870	2.2	**FF47**			30
30	176	48.00*	8530	2.6				
33	157	42.86	8300	2.9				
25	215	58.32	4090	1.10				
26	200	54.54	4300	1.15				
28	189	51.70	4440	1.20				
31	172	47.02	4650	1.35	**FA37**	-	**DRN80MK4**	21
33	160	43.83	4780	1.45	**FAF37**			23
37	140	38.31	4970	1.65	**F37**			22
40	131	35.91	5040	1.75	**FF37**			23
45	116	31.69	4940	2.0				
51	103	28.09	4820	2.2				
60	87	23.88	4640	2.6				

P_N = 0.55 kW

n_a min^{-1}	M_a Nm	i	F_{Ra} N	SEW f_B	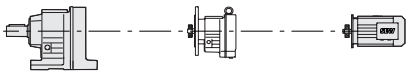			m kg
61	86	23.63	4630	2.7	**FA37**	-	**DRN80MK4**	21
70	75	20.57	4480	3.1	**FAF37**			22
74	71	19.27	4410	3.3	**F37**			21
84	62	17.03	4280	3.7	**FF37**			23
100	52	14.33	4090	4.1				
37	144	77.21	3410	0.90	**FA27**	-	**DRN71M2**	13
39	135	72.37	3390	0.95	**FAF27**			13
44	119	63.86	3340	1.10	**F27**			13
50	105	56.62	3290	1.25	**FF27**			14
56	93	50.19	3230	1.40				
62	85	23.25	3180	1.55	**FA27**	-	**DRN80MK4**	15
71	74	20.15	3100	1.75	**FAF27**			15
76	69	18.84	3060	1.90	**F27**			15
88	60	16.28	2970	2.2	**FF27**			16
104	51	13.84	2860	2.6				
116	45	12.35	2790	2.9				
136	39	10.55	2680	3.4				
145	36	9.88	2640	3.6				
153	34	9.40	2570	3.8				
177	30	8.13	2480	4.1				
208	25	6.91	2380	4.5				
233	23	6.17	2310	4.8				
272	19	5.27	2210	5.2				
291	18	4.93	2170	5.3				
345	15	4.16	2070	5.7				
348	15	8.13	2060	8.1	**FA27**	-	**DRN71M2**	12
409	13	6.91	1970	8.9	**FAF27**			13
458	11	6.17	1910	9.5	**F27**			13
536	9.8	5.27	1820	10	**FF27**			14
573	9.2	4.93	1780	10				
680	7.7	4.16	1690	11				

P_N = 0.75 kW

n_a min^{-1}	M_a Nm	i	F_{Ra} N	SEW f_B	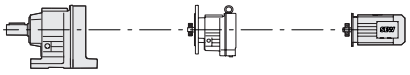			m kg
0.27	22700	5404	72400	0.90	**FA157**	**R97**	**DRN80M4**	770
0.30	20000	4831	93900	1.00	**FAF157**			830
0.35	16800	4130	103600	1.20	**F157**			790
0.52	11700	2780	114700	1.70	**FF157**			900
0.59	10300	2427	116800	1.95	**FA157**	**R97**	**DRN80M4**	770
0.66	9140	2185	118400	2.2	**FAF157**			830
0.74	8130	1944	119600	2.5	**F157**			790
0.86	7290	1674	120000	2.7	**FF157**			900
1.1	5630	1308	120000	3.6				
1.2	4960	1169	120000	4.0				
1.5	3930	953	120000	5.1				
1.7	3400	845	120000	5.9				
3.2	1800	446	120000	11				
4.8	1220	302	120000	16				
0.48	13400	3031	87700	0.90	**FA127**	**R77**	**DRN80M4**	435
					FAF127			470
					F127			470
					FF127			520

P_N = 0.75 kW

n_a min^{-1}	M_a Nm	i	F_{Ra} N	SEW f_B	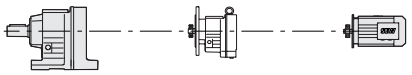			m kg
0.54	12100	2672	90000	1.00	**FA127**	**R77**	**DRN80M4**	435
0.61	10600	2357	90000	1.15	**FAF127**			470
0.71	9120	2038	90000	1.30	**F127**			470
0.81	7940	1784	90000	1.50	**FF127**			510
0.90	7120	1606	90000	1.70				
0.79	8100	1826	48700	0.95				
0.90	7200	1597	51100	1.05				
1.0	6290	1401	53300	1.20	**FA107**	**R77**	**DRN80M4**	280
1.2	5510	1243	55200	1.40	**FAF107**			305
1.3	4900	1087	56500	1.55	**F107**			300
1.5	4210	950	58000	1.80	**FF107**			325
1.7	3670	834	59100	2.1				
2.3	2850	640	60700	2.7				
3.3	1940	436	62300	4.0				
1.4	4700	1022	26900	0.90				
1.6	4040	898	30600	1.05				
1.8	3570	784	31900	1.20	**FA97**	**R57**	**DRN80M4**	190
2.1	3100	690	33100	1.40	**FAF97**			215
2.4	2730	605	33900	1.55	**F97**			200
2.7	2380	529	34700	1.80	**FF97**			230
3.1	2100	467	35200	2.1				
3.6	1810	406	35700	2.4				
4.0	1620	363	36100	2.7				
2.1	3030	674	18400	1.00				
2.4	2760	609	23900	1.10	**FA87**	**R57**	**DRN80M4**	125
2.8	2330	515	25400	1.30	**FAF87**			140
3.2	2050	452	26300	1.45	**F87**			130
4.2	1540	345	27700	1.95	**FF87**			145
3.9	1680	367	14400	0.90	**FA77**	**R37**	**DRN80M4**	74
4.5	1480	323	15800	1.00	**FAF77**			80
5.2	1280	280	17000	1.15	**F77**			77
					FF77			88
3.5	2070	276.77	35300	2.1	**FA97**	**-**	**DRN90S6**	175
3.8	1900	253.41	35600	2.3	**FAF97**			195
4.3	1680	223.88	36000	2.6	**F97**			180
					FF97			215
3.5	2030	270.68	26400	1.50				
3.8	1910	255.37	26700	1.55	**FA87**	**-**	**DRN90S6**	110
4.2	1710	228.93	27300	1.75	**FAF87**			120
4.9	1480	197.20	27900	2.0	**F87**			115
5.3	1350	179.97	28200	2.2	**FF87**			130
6.0	1190	159.61	28600	2.5				
5.3	1350	270.68	28200	2.2	**FA87**	**-**	**DRN80M4**	105
5.6	1270	255.37	28400	2.4	**FAF87**			115
6.3	1140	228.93	28700	2.6	**F87**			110
					FF87			125
4.8	1480	198.31	15800	1.00	**FA77**	**-**	**DRN90S6**	69
5.1	1410	188.40	16300	1.05	**FAF77**			76
5.8	1250	166.47	17200	1.20	**F77**			73
6.7	1060	142.27	18000	1.40	**FF77**			84
7.3	980	130.42	18400	1.55				

P_N = 0.75 kW

n_a min^{-1}	M_a Nm	i	F_{Ra} N	SEW f_B	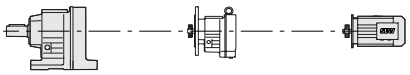			m kg
6.4	1120	225.79	17800	1.35				
7.3	990	198.31	18400	1.50				
7.6	940	188.40	18500	1.60	**FA77**			65
8.7	830	166.47	18900	1.80	**FAF77**	-	**DRN80M4**	71
10	710	142.27	19200	2.1	**F77**			68
11	650	130.42	19400	2.3	**FF77**			79
13	540	108.46*	19600	2.8				
13	570	114.45	19600	2.6				
8.4	850	170.85	10000	1.00				
8.9	810	162.31	10400	1.10				
10	710	142.40	11200	1.25				
12	600	120.79	11900	1.45	**FA67**			41
13	540	109.04	12200	1.60	**FAF67**	-	**DRN80M4**	47
15	475	95.94	12500	1.80	**F67**			43
16	450	90.59	12600	1.95	**FF67**			49
18	395	79.76	12800	2.2				
21	335	67.65	13000	2.6				
24	305	61.07	13000	2.9				
11	635	127.27	7950	1.00				
13	545	110.01	9590	1.15				
15	465	93.47	10200	1.35				
17	415	83.46	10500	1.50	**FA57**			37
20	365	72.98	10800	1.75	**FAF57**	-	**DRN80M4**	42
21	340	68.22	10900	1.85	**F57**			37
24	295	58.97	11200	2.2	**FF57**			43
29	250	50.10	11400	2.5				
32	220	44.73	11300	2.8				
18	395	79.72	8840	1.15				
21	340	68.09	8640	1.35				
22	325	65.36	8580	1.40				
25	280	56.49	8360	1.60	**FA47**			29
30	240	48.00*	8100	1.90	**FAF47**	-	**DRN80M4**	32
34	215	42.86	7910	2.1	**F47**			30
39	182	36.61	7640	2.5	**FF47**			33
42	171	34.29	7530	2.6				
50	144	28.88	7220	3.1				
31	235	47.02	3730	1.00				
33	220	43.83	4020	1.05	**FA37**			25
38	191	38.31	4420	1.20	**FAF37**	-	**DRN80M4**	26
40	179	35.91	4570	1.30	**F37**			25
45	158	31.69	4590	1.45	**FF37**			27
51	140	28.09	4500	1.65				
61	118	23.63	4370	1.95				
70	102	20.57	4250	2.3	**FA37**			24
75	96	19.27	4200	2.4	**FAF37**	-	**DRN80M4**	26
85	85	17.03	4090	2.7	**F37**			25
100	71	14.33	3930	3.0	**FF37**			27
112	64	12.87	3830	3.2				

P_N = 0.75 kW

n_a min^{-1}	M_a Nm	i	F_{Ra} N	SEW f_B	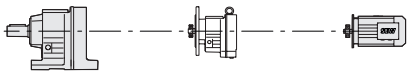			m kg
62	116	23.25	2910	1.10	**FA27** **FAF27** **F27** **FF27**	-	**DRN80M4**	18 19 19 19
71	100	20.15	2860	1.30				
76	94	18.84	2830	1.40				
88	81	16.28	2770	1.60				
104	69	13.84	2700	1.90				
117	61	12.35	2640	2.1				
136	52	10.55	2560	2.5				
146	49	9.88	2520	2.6				
153	47	9.40	2450	2.8				
177	40	8.13	2370	3.0				
208	34	6.91	2290	3.3				
234	31	6.17	2220	3.6				
273	26	5.27	2140	3.8				
292	25	4.93	2100	3.9				
347	21	4.16	2010	4.2				
351	20	8.13	2000	6.0	**FA27** **FAF27** **F27** **FF27**	-	**DRN80MS2**	18 19 19 19
413	17	6.91	1920	6.6				
463	15	6.17	1860	7.1				
542	13	5.27	1780	7.6				
579	12	4.93	1750	7.8				
687	10	4.16	1660	8.4				

P_N = 1.1 kW

n_a min^{-1}	M_a Nm	i	F_{Ra} N	SEW f_B	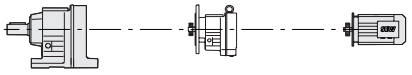			m kg
0.52	17500	2780	101800	1.15	**FA157** **FAF157** **F157** **FF157**	**R97**	**DRN90S4**	780 840 800 900
0.60	15400	2427	107100	1.30	**FA157** **FAF157** **F157** **FF157**	**R97**	**DRN90S4**	770 830 790 900
0.67	13800	2185	110800	1.45				
0.75	12200	1944	113700	1.65				
0.87	10800	1674	116000	1.85				
1.1	8390	1308	119300	2.4				
1.2	7430	1169	120000	2.7				
1.5	5940	953	120000	3.4				
1.7	5190	845	120000	3.9				
3.3	2740	446	120000	7.3				
4.8	1860	302	120000	10				
0.71	13400	2038	87700	0.90	**FA127** **FAF127** **F127** **FF127**	**R77**	**DRN90S4**	440 475 475 520
0.82	11700	1784	90000	1.00				
0.91	10500	1606	90000	1.15				
1.1	9100	1390	90000	1.30				
1.2	7950	1220	90000	1.50				
1.4	7070	1077	90000	1.70				
1.2	8140	1243	48600	0.95	**FA107** **FAF107** **F107** **FF107**	**R77**	**DRN90S4**	285 310 305 330
1.3	7200	1087	51100	1.05				
1.5	6220	950	53500	1.25				
1.8	5430	834	55300	1.40				
2.0	4770	736	56800	1.60				
2.3	4200	640	58000	1.85				

P_N = 1.1 kW

n_a min^{-1}	M_a Nm	i	F_{Ra} N	SEW f_B	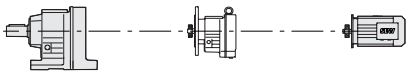			m kg
2.1	4560	690	29100	0.95				
2.4	4010	605	30700	1.05	**FA97**			195
2.8	3500	529	32100	1.25	**FAF97**	**R57**	**DRN90S4**	220
3.1	3090	467	33100	1.40	**F97**			205
3.6	2670	406	34100	1.60	**FF97**			240
4.0	2390	363	34600	1.80				
3.2	3010	452	19600	1.00	**FA87**			130
4.2	2270	345	25600	1.30	**FAF87**	**R57**	**DRN90S4**	145
4.8	1970	300	26500	1.50	**F87**			140
5.8	1630	249	27500	1.85	**FF87**			155
3.5	3040	276.77	33200	1.40				
3.8	2780	253.41	33800	1.55	**FA97**			175
4.3	2460	223.88	34500	1.75	**FAF97**	**-**	**DRN90L6**	200
5.0	2080	189.92	35200	2.1	**F97**			185
5.5	1920	174.87	35500	2.2	**FF97**			215
					FA97			175
5.3	2000	276.77	35400	2.2	**FAF97**			195
5.7	1830	253.41	35700	2.4	**F97**	**-**	**DRN90S4**	180
6.5	1620	223.88	36100	2.7	**FF97**			215
4.2	2510	228.93	24800	1.20	**FA87**			110
4.9	2160	197.20	25900	1.40	**FAF87**	**-**	**DRN90L6**	125
5.3	1980	179.97	26500	1.50	**F87**			120
6.0	1750	159.61	27200	1.70	**FF87**			135
5.4	1950	270.68	26600	1.55				
5.7	1840	255.37	26900	1.65				
6.4	1650	228.93	27400	1.80	**FA87**			110
7.4	1420	197.20	28000	2.1	**FAF87**	**-**	**DRN90S4**	120
8.1	1300	179.97	28300	2.3	**F87**			115
9.1	1150	159.61	28600	2.6	**FF87**			130
11	970	134.16	29000	3.1				
12	890	123.29	29200	3.4				
7.3	1430	198.31	16200	1.05				
7.7	1360	188.40	16600	1.10				
8.7	1200	166.47	17400	1.25				
10	1030	142.27	18200	1.45	**FA77**			69
11	940	130.42	18500	1.60	**FAF77**	**-**	**DRN90S4**	76
13	785	108.46*	19000	1.90	**F77**			73
13	830	114.45	18900	1.80	**FF77**			84
15	685	94.93	19300	2.2				
17	615	85.52	19500	2.4				
19	540	75.02	19600	2.8				
12	870	120.79	9820	1.00				
13	785	109.04	10600	1.10				
15	695	95.94	11300	1.25				
16	655	90.59	11600	1.35				
18	575	79.76	12000	1.50	**FA67**			47
22	490	67.65	12500	1.80	**FAF67**	**-**	**DRN90S4**	53
24	440	61.07	12700	1.95	**F67**			50
27	390	53.73	12900	2.2	**FF67**			56
29	365	50.74	12900	2.4				
34	310	43.20	13000	2.8				
37	285	39.26	13000	2.8				
43	245	34.01	13000	3.0				

P_N = 1.1 kW

n_a min^{-1}	M_a Nm	i	F_{Ra} N	SEW f_B	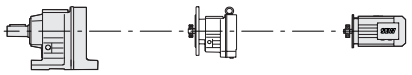			m kg
17	605	83.46	9180	1.05				
20	525	72.98	9740	1.20				
21	490	68.22	9970	1.30				
25	425	58.97	10400	1.50	**FA57**			43
29	360	50.10	10800	1.75	**FAF57**	-	**DRN90S4**	48
33	325	44.73	10600	1.95	**F57**			43
38	275	38.21	10300	2.3	**FF57**			50
41	260	35.79	10100	2.4				
48	220	30.15	9720	2.7				
26	410	56.49	7490	1.10				
30	345	48.00*	7360	1.30	**FA47**			35
34	310	42.86	7240	1.45	**FAF47**	-	**DRN90S4**	38
40	265	36.61	7070	1.70	**F47**			36
42	250	34.29	6990	1.80	**FF47**			39
50	210	28.88	6770	2.2				
47	225	30.86	6850	2.0				
50	210	29.32	6790	2.1	**FA47**			34
57	186	25.72	6610	2.4	**FAF47**	-	**DRN90S4**	37
67	158	21.82	6380	2.9	**F47**			35
74	142	19.70	6230	3.2	**FF47**			38
46	230	31.69	3830	1.00	**FA37**			30
52	205	28.09	3970	1.15	**FAF37**	-	**DRN90S4**	32
61	172	23.88	3920	1.35	**F37**			31
					FF37			33
71	149	20.57	3860	1.55				
76	139	19.27	3820	1.65				
85	123	17.03	3760	1.85	**FA37**			30
102	103	14.33	3650	2.1	**FAF37**	-	**DRN90S4**	32
113	93	12.87	3580	2.2	**F37**			31
131	80	11.08	3470	2.4	**FF37**			32
140	75	10.42	3430	2.5				
162	65	8.97	3320	2.7				
72	146	20.15	2440	0.90				
77	136	18.84	2450	0.95				
89	118	16.28	2440	1.10				
105	100	13.84	2410	1.30				
118	89	12.35	2380	1.45				
138	76	10.55	2330	1.70	**FA27**			24
147	71	9.88	2310	1.80	**FAF27**	-	**DRN90S4**	25
155	68	9.40	2230	1.90	**F27**			24
179	59	8.13	2180	2.1	**FF27**			25
211	50	6.91	2120	2.3				
236	45	6.17	2080	2.5				
276	38	5.27	2010	2.6				
295	36	4.93	1990	2.7				
350	30	4.16	1910	2.9				
352	30	8.13	1910	4.1				
414	25	6.91	1840	4.5	**FA27**			18
464	23	6.17	1790	4.8	**FAF27**	-	**DRN80M2**	19
543	19	5.27	1720	5.2	**F27**			19
580	18	4.93	1690	5.3	**FF27**			19
688	15	4.16	1610	5.7				

P_N = 1.5 kW

n_a min^{-1}	M_a Nm	i	F_{Ra} N	SEW f_B	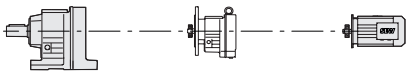			m kg
0.53	24100	2780	10800	0.85	**FA157** **FAF157** **F157** **FF157**	**R97**	**DRN90L4**	780 840 800 910
0.60	21300	2427	88800	0.95				
0.67	19100	2185	96900	1.05				
0.75	17000	1944	103200	1.20				
0.87	14900	1674	108300	1.35	**FA157**			780
1.1	11600	1308	114800	1.75	**FAF157**	**R97**	**DRN90L4**	840
1.3	10300	1169	116900	1.95	**F157**			800
1.5	8250	953	119500	2.4	**FF157**			900
1.7	7240	845	120000	2.8				
3.3	3830	446	120000	5.2				
4.8	2590	302	120000	7.7				
0.91	14400	1606	85700	0.85				
1.1	12500	1390	89500	0.95				
1.2	10900	1220	90000	1.10	**FA127**			440
1.4	9690	1077	90000	1.25	**FAF127**	**R77**	**DRN90L4**	480
1.6	8320	930	90000	1.45	**F127**			480
1.8	7320	820	90000	1.65	**FF127**			520
2.0	6470	727	90000	1.85				
2.3	5830	648	90000	2.1				
1.5	8530	950	47500	0.90				
1.8	7460	834	50400	1.05				
2.0	6560	736	52700	1.15	**FA107**			290
2.3	5760	640	54600	1.35	**FAF107**	**R77**	**DRN90L4**	310
2.6	4980	560	56300	1.55	**F107**			305
3.0	4350	489	57700	1.75	**FF107**			335
3.4	3920	436	58600	1.95				
4.0	3330	370	59800	2.3				
2.8	4780	529	23800	0.90	**FA97**			200
3.1	4230	467	30100	1.00	**FAF97**	**R57**	**DRN90L4**	220
3.6	3650	406	31700	1.20	**F97**			210
4.0	3270	363	32700	1.30	**FF97**			240
					FA87			135
4.9	2700	300	24100	1.10	**FAF87**	**R57**	**DRN90L4**	150
5.9	2240	249	25700	1.35	**F87**			140
					FF87			155
3.8	3790	254.40*	58800	2.0	**FA107**			265
4.5	3210	215.37	60000	2.4	**FAF107**	-	**DRN100L6**	285
4.8	2970	199.31	60400	2.6	**F107**			280
5.4	2660	178.64	61000	2.9	**FF107**			305
3.5	4130	276.77	30400	1.05				
3.8	3780	253.41	31400	1.15	**FA97**			190
4.3	3340	223.88	32500	1.30	**FAF97**	-	**DRN100L6**	210
5.1	2830	189.92	33700	1.50	**F97**			195
5.5	2610	174.87	34200	1.65	**FF97**			230
5.3	2710	276.77	34000	1.60				
5.8	2480	253.41	34400	1.75	**FA97**			175
6.5	2190	223.88	35000	1.95	**FAF97**	-	**DRN90L4**	200
7.7	1860	189.92	35600	2.3	**F97**			185
8.4	1710	174.87	35900	2.5	**FF97**			215

P_N = 1.5 kW

n_a min^{-1}	M_a Nm	i	F_{Ra} N	SEW f_B	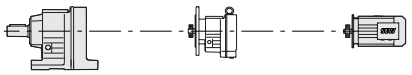			m kg
5.4	2650	270.68	24300	1.15				
5.7	2500	255.37	24800	1.20				
6.4	2240	228.93	25700	1.35				
7.4	1930	197.20	26600	1.55	**FA87**			110
8.1	1760	179.97	27100	1.70	**FAF87**	-	**DRN90L4**	125
9.2	1560	159.61	27700	1.90	**F87**			120
11	1320	134.16	28300	2.3	**FF87**			135
13	1070	109.49	28800	2.8				
15	960	97.89	29100	3.1				
8.8	1630	166.47	14800	0.90				
10	1390	142.27	16400	1.10				
11	1280	130.42	17000	1.15				
13	1060	108.46*	18100	1.40				
13	1120	114.45	17800	1.35				
15	930	94.93	18600	1.60				
17	840	85.52	18900	1.80	**FA77**			73
19	735	75.02	19200	2.0	**FAF77**	-	**DRN90L4**	79
20	710	72.50	19200	2.1	**F77**			76
22	650	66.46	19400	2.3	**FF77**			87
25	570	58.32	19600	2.6				
26	540	55.27	19600	2.8				
30	475	48.37	19700	3.2				
34	425	43.58	19800	3.5				
38	375	38.23	19900	4.0				
					FA77			71
40	360	36.58	19900	3.1	**FAF77**	-	**DRN90L4**	78
46	310	31.51	20000	4.5	**F77**			75
					FF77			86
16	890	90.59	9650	1.00				
18	780	79.76	10600	1.10				
22	665	67.65	11500	1.30	**FA67**			50
24	600	61.07	11900	1.45	**FAF67**	-	**DRN90L4**	56
27	525	53.73	12300	1.65	**F67**			53
29	495	50.74	12400	1.75	**FF67**			59
34	425	43.20	12700	2.1				
37	385	39.26	12900	2.0				
40	355	36.30	13000	2.4	**FA67**			49
46	315	32.08	13000	2.8	**FAF67**	-	**DRN90L4**	55
53	270	27.41	13000	3.2	**F67**			52
58	245	25.13	13000	3.5	**FF67**			58
25	580	58.97	9370	1.10				
29	490	50.10	9980	1.30	**FA57**			46
33	440	44.73	9940	1.45	**FAF57**	-	**DRN90L4**	52
38	375	38.21	9680	1.70	**F57**			46
41	350	35.79	9560	1.80	**FF57**			53
48	295	30.15	9240	2.0				
40	360	36.61	6430	1.25	**FA47**			38
43	335	34.29	6390	1.35	**FAF47**	-	**DRN90L4**	41
51	285	28.88	6260	1.60	**F47**			39
					FF47			42

P_N = 1.5 kW

n_a min^{-1}	M_a Nm	i	F_{Ra} N	SEW f_B	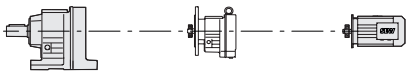			m kg
47	305	30.86	6320	1.50				
50	285	29.32	6270	1.55				
57	250	25.72	6160	1.80	**FA47**			38
67	215	21.82	5990	2.1	**FAF47**	-	**DRN90L4**	40
74	193	19.70	5880	2.3	**F47**			38
84	170	17.33	5740	2.7	**FF47**			42
89	160	16.36	5670	2.8				
105	137	13.93	5480	3.3				
71	200	20.57	3410	1.15				
76	189	19.27	3410	1.20				
86	167	17.03	3390	1.40				
102	141	14.33	3340	1.55	**FA37**			33
114	126	12.87	3300	1.60	**FAF37**	-	**DRN90L4**	35
132	109	11.08	3230	1.75	**F37**			34
140	102	10.42	3200	1.80	**FF37**			36
163	88	8.97	3120	2.0				
182	79	8.01	3060	2.2				
106	136	13.84	2090	0.95				
118	121	12.35	2090	1.05				
138	103	10.55	2090	1.25				
148	97	9.88	2080	1.35				
155	92	9.40	1990	1.40	**FA27**			27
180	80	8.13	1970	1.55	**FAF27**	-	**DRN90L4**	28
212	68	6.91	1940	1.70	**F27**			28
237	60	6.17	1920	1.80	**FF27**			28
277	52	5.27	1880	1.95				
296	48	4.93	1860	2.0				
352	41	4.16	1800	2.1				
358	40	8.13	1800	3.1				
421	34	6.91	1740	3.4	**FA27**			24
472	30	6.17	1700	3.6	**FAF27**	-	**DRN90S2**	25
552	26	5.27	1640	3.9	**F27**			24
589	24	4.93	1620	4.0	**FF27**			25
700	20	4.16	1550	4.3				

P_N = 2.2 kW

n_a min^{-1}	M_a Nm	i	F_{Ra} N	SEW f_B	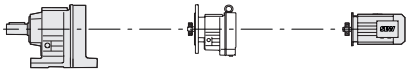			m kg
1.0	18200	1441	99700	1.10	**FA157** **FAF157** **F157** **FF157**	**R97**	**DRN100LS4**	780 840 810 910
0.87	22300	1674	80700	0.90				
1.1	17300	1308	102200	1.15				
1.2	15400	1169	107100	1.30				
1.5	12500	953	113300	1.60				
1.7	11000	845	115800	1.80				
1.9	9860	764	117400	2.0	**FA157**			780
2.1	8770	680	118900	2.3	**FAF157**	**R97**	**DRN100LS4**	840
2.5	7350	576	120000	2.7	**F157**			800
3.3	5800	446	120000	3.5	**FF157**			910
4.8	3920	302	120000	5.1				
5.3	3530	273	120000	5.7				
6.3	2960	232	120000	6.8				
7.4	2510	197	120000	8.0				

P_N = 2.2 kW

n_a min^{-1}	M_a Nm	i	F_{Ra} N	SEW f_B	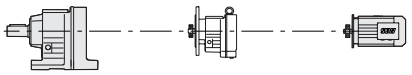			m kg
1.4	14400	1077	85700	0.85				
1.6	12400	930	89600	0.95				
1.8	10900	820	90000	1.10	**FA127**			445
2.0	9670	727	90000	1.25	**FAF127**	**R77**	**DRN100LS4**	485
2.2	8690	648	90000	1.40	**F127**			480
2.6	7360	549	90000	1.65	**FF127**			530
2.9	6620	495	90000	1.80				
3.4	5730	428	90000	2.1				
2.3	8590	640	47300	0.90				
2.6	7460	560	50400	1.05	**FA107**			295
3.0	6510	489	52800	1.20	**FAF107**	**R77**	**DRN100LS4**	315
3.3	5850	436	54400	1.30	**F107**			310
3.9	4960	370	56400	1.55	**FF107**			340
4.4	4460	333	57500	1.70				
					FA97			205
5.1	3840	285	31200	1.10	**FAF97**	**R57**	**DRN100LS4**	225
5.9	3300	245	32600	1.30	**F97**			210
					FF97			245
3.8	5490	254.40*	55200	1.40	**FA107**			270
4.5	4650	215.37	57100	1.65	**FAF107**	-	**DRN112M6**	290
4.9	4300	199.31	57800	1.80	**F107**			290
5.5	3860	178.64	58700	2.0	**FF107**			315
5.7	3690	254.40*	59100	2.1	**FA107**			255
6.7	3120	215.37	60200	2.5	**FAF107**	-	**DRN100LS4**	275
7.3	2890	199.31	60600	2.7	**F107**			275
8.1	2590	178.64	61100	3.0	**FF107**			300
4.4	4830	223.88	21700	0.90	**FA97**			195
5.1	4100	189.92	30500	1.05	**FAF97**	-	**DRN112M6**	220
5.6	3780	174.87	31400	1.15	**F97**			205
6.2	3370	156.30	32400	1.25	**FF97**			235
5.2	4010	276.77	30700	1.05				
5.7	3670	253.41	31700	1.15				
6.5	3240	223.88	32700	1.35	**FA97**			180
7.6	2750	189.92	33900	1.55	**FAF97**	-	**DRN100LS4**	200
8.3	2530	174.87	34300	1.70	**F97**			190
9.3	2260	156.30	34900	1.90	**FF97**			220
10	2040	140.71	35300	2.1				
11	1850	127.42	35700	2.3				
7.4	2860	197.20	23500	1.05				
8.1	2610	179.97	24400	1.15				
9.1	2310	159.61	25500	1.30				
11	1940	134.16	26600	1.55				
12	1790	123.29	27100	1.70	**FA87**			115
13	1590	109.49	27600	1.90	**FAF87**			130
15	1420	97.89	28000	2.1	**F87**	-	**DRN100LS4**	120
16	1280	88.01	28400	2.4	**FF87**			140
19	1110	76.39	27700	2.7				
21	990	68.40	27000	3.0				
26	820	56.75	25700	3.7				
29	730	50.36	25000	4.0				
32	655	45.28	24300	4.3				

P_N = 2.2 kW

n_a min^{-1}	M_a Nm	i	F_{Ra} N	SEW f_B	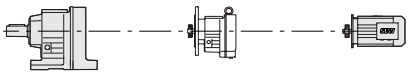			m kg
13	1570	108.46*	15200	0.95				
13	1660	114.45	14600	0.90				
15	1380	94.93	16500	1.10				
17	1240	85.52	17300	1.20	**FA77**			77
19	1090	75.02	18000	1.40	**FAF77**	-	**DRN100LS4**	83
22	960	66.46	18400	1.55	**F77**			81
25	840	58.32	18900	1.80	**FF77**			91
26	800	55.27	19000	1.85				
30	700	48.37	19300	2.1				
33	630	43.58	19400	2.4				
40	530	36.58	19600	2.1	**FA77**			75
46	455	31.51	19800	3.0	**FAF77**	-	**DRN100LS4**	82
50	415	28.75	19800	3.4	**F77**			79
57	370	25.50*	19900	4.1	**FF77**			90
24	880	61.07	9680	1.00				
27	780	53.73	10700	1.10	**FA67**			54
29	735	50.74	11000	1.20	**FAF67**	-	**DRN100LS4**	60
34	625	43.20	11700	1.40	**F67**			57
37	570	39.26	12100	1.35	**FF67**			63
43	495	34.01	12400	1.50				
45	465	32.08	12600	1.85				
53	395	27.41	12800	2.2	**FA67**			53
58	365	25.13	12900	2.4	**FAF67**	-	**DRN100LS4**	59
66	320	22.05	13000	2.7	**F67**			55
69	305	20.90*	13000	2.9	**FF67**			62
79	265	18.29	13000	3.3				
32	650	44.73	6630	0.95	**FA57**			50
38	555	38.21	8640	1.15	**FAF57**	-	**DRN100LS4**	55
41	520	35.79	8590	1.20	**F57**			50
48	435	30.15	8430	1.35	**FF57**			57
58	360	24.96	8200	1.60				
69	305	21.17	7980	2.1	**FA57**			49
76	275	19.11	7830	2.3	**FAF57**	-	**DRN100LS4**	55
86	245	16.81	7630	2.6	**F57**			50
91	230	15.88	7540	2.7	**FF57**			56
56	375	25.72	5380	1.20				
66	315	21.82	5340	1.40				
74	285	19.70	5290	1.60	**FA47**			42
84	250	17.33	5220	1.80	**FAF47**	-	**DRN100LS4**	44
89	235	16.36	5180	1.90	**F47**			42
104	200	13.93	5060	2.2	**FF47**			46
115	183	12.66	4980	2.5				
132	159	10.97	4850	2.8				
162	130	8.96	4560	2.5				
101	210	14.33	2800	1.05				
113	186	12.87	2810	1.10				
131	161	11.08	2820	1.20				
139	151	10.42	2810	1.25				
162	130	8.97	2790	1.35	**FA37**			37
181	116	8.01	2760	1.45	**FAF37**	-	**DRN100LS4**	39
215	98	6.74	2620	1.45	**F37**			38
240	88	6.05	2580	1.55	**FF37**			40
278	76	5.21	2530	1.65				
296	71	4.90	2510	1.70				
344	61	4.22	2440	1.80				
385	55	3.77	2390	1.90				

P_N = 2.2 kW

n_a min^{-1}	M_a Nm	i	F_{Ra} N	SEW f_B	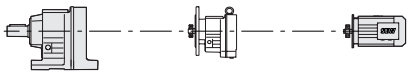			m kg
178	118	16.28	1720	1.10	**FA27** **FAF27** **F27** **FF27**	-	**DRN90L2**	27
210	100	13.84	1730	1.30				28
235	89	12.35	1730	1.45				28
275	76	10.55	1710	1.70				28
294	71	9.88	1710	1.80				
357	59	8.13	1610	2.1				
421	50	6.91	1580	2.3				
471	45	6.17	1560	2.4				
552	38	5.27	1520	2.6				
589	36	4.93	1500	2.7				
699	30	4.16	1460	2.9				

P_N = 3.0 kW

n_a min^{-1}	M_a Nm	i	F_{Ra} N	SEW f_B	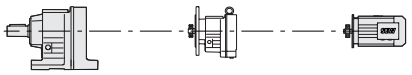			m kg
1.1	23700	1308	39900	0.85	**FA157** **FAF157** **F157** **FF157**	**R97**	**DRN100L4**	790
1.3	21100	1169	89600	0.95				850
1.5	17100	953	102800	1.15				810
1.7	15100	845	107900	1.30				920
1.9	13600	764	111100	1.45				
2.1	12100	680	114000	1.65				
2.5	10200	576	117000	1.95				
3.3	7980	446	119800	2.5				
4.8	5400	302	120000	3.7				
5.3	4860	273	120000	4.1				
6.3	4090	232	120000	4.9				
7.4	3470	197	120000	5.8				
2.0	13200	727	88100	0.90	**FA127** **FAF127** **F127** **FF127**	**R77**	**DRN100L4**	455
2.3	11900	648	90000	1.00				490
2.7	10000	549	90000	1.20				490
2.9	9040	495	90000	1.35				530
3.3	7970	436	49000	0.95	**FA107** **FAF107** **F107** **FF107**	**R77**	**DRN100L4**	300
3.9	6760	370	52200	1.15				325
4.4	6090	333	53800	1.25				320
5.0	5320	291	55600	1.45				345
3.8	7480	254.40*	50300	1.05	**FA107** **FAF107** **F107** **FF107**	-	**DRN132S6**	285
4.5	6330	215.37	53200	1.20				305
4.9	5860	199.31	54300	1.30				300
5.5	5250	178.64	55700	1.45				325
5.7	5010	254.40*	56300	1.55	**FA107** **FAF107** **F107** **FF107**	-	**DRN100L4**	265
6.8	4240	215.37	57900	1.80				285
7.3	3920	199.31	58600	1.95				280
8.2	3510	178.64	59400	2.2				305
9.0	3170	161.28*	60100	2.4				
6.5	4410	223.88	29600	1.00	**FA97** **FAF97** **F97** **FF97**	-	**DRN100L4**	190
7.7	3740	189.92	31500	1.15				210
8.3	3440	174.87	32300	1.25				195
9.3	3080	156.30	33100	1.40				230
10	2770	140.71	33800	1.55				
11	2510	127.42	34400	1.70				
13	2220	112.99	35000	1.95				
14	2010	102.16	35400	2.1				
16	1770	89.85	35800	2.4				

P_N = 3.0 kW

n_a min^{-1}	M_a Nm	i	F_{Ra} N	SEW f_B	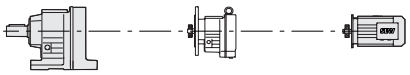			m kg
11	2640	134.16	24300	1.15				
12	2430	123.29	25100	1.25				
13	2150	109.49	26000	1.40				
15	1930	97.89	26700	1.55	**FA87**			125
17	1730	88.01	26700	1.75	**FAF87**	-	**DRN100L4**	135
19	1500	76.39	26100	2.0	**F87**			130
21	1350	68.40	25500	2.2	**FF87**			145
26	1120	56.75	24600	2.7				
29	990	50.36	23900	3.0				
17	1680	85.52	14400	0.90				
19	1480	75.02	15900	1.00				
22	1310	66.46	16900	1.15	**FA77**			84
25	1150	58.32	17700	1.30	**FAF77**	-	**DRN100L4**	91
26	1090	55.27	18000	1.40	**F77**			88
30	950	48.37	18500	1.60	**FF77**			98
33	860	43.58	18800	1.75				
38	750	38.23	19100	2.0				
40	720	36.58	19200	1.55				
46	620	31.51	19500	2.2	**FA77**			83
51	565	28.75	19600	2.5	**FAF77**	-	**DRN100L4**	89
57	500	25.50*	19700	3.0	**F77**			86
68	420	21.43	19800	3.6	**FF77**			97
34	850	43.20	10000	1.00	**FA67**			61
37	770	39.26	10700	1.00	**FAF67**	-	**DRN100L4**	67
43	670	34.01	11500	1.10	**F67**			64
					FF67			70
45	630	32.08	11700	1.40				
53	540	27.41	12200	1.60				
58	495	25.13	12400	1.75	**FA67**			60
66	435	22.05	12700	2.0	**FAF67**	-	**DRN100L4**	66
70	410	20.90*	12800	2.1	**F67**			63
80	360	18.29	12900	2.4	**FF67**			69
88	325	16.48	13000	2.7				
101	285	14.46	13000	3.1				
58	490	24.96	7420	1.15				
69	415	21.17	7310	1.50				
76	375	19.11	7220	1.70	**FA57**			56
87	330	16.81	7100	1.90	**FAF57**	-	**DRN100L4**	62
92	310	15.88	7040	2.0	**F57**			57
108	265	13.52	6850	2.4	**FF57**			63
119	240	12.29	6730	2.6				
137	210	10.64	6540	3.0				
74	390	19.70	4610	1.15				
84	340	17.33	4610	1.30				
89	320	16.36	4610	1.40	**FA47**			49
105	275	13.93	4570	1.65	**FAF47**	-	**DRN100L4**	51
115	250	12.66	4540	1.80	**F47**			50
133	215	10.97	4470	2.1	**FF47**			53
163	176	8.96	4210	1.85				

P_N = 3.0 kW

n_a min^{-1}	M_a Nm	i	F_{Ra} N	SEW f_B	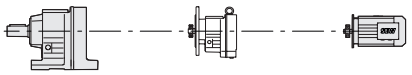			m kg
131	220	11.08	2340	0.85				
140	205	10.42	2360	0.90				
162	176	8.97	2400	1.00				
182	158	8.01	2410	1.10	**FA37**			44
216	133	6.74	2290	1.05	**FAF37**	-	**DRN100L4**	46
241	119	6.05	2290	1.15	**F37**			45
279	103	5.21	2280	1.20	**FF37**			47
297	96	4.90	2270	1.25				
345	83	4.22	2240	1.35				
386	74	3.77	2210	1.40				

P_N = 4.0 kW

n_a min^{-1}	M_a Nm	i	F_{Ra} N	SEW f_B	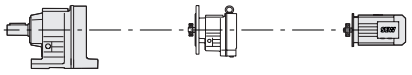			m kg
1.5	22900	953	67600	0.85				
1.7	20200	845	93100	1.00				
1.9	18200	764	99700	1.10				
2.2	16200	680	105200	1.25	**FA157**			800
2.5	13600	576	111000	1.45	**FAF157**	**R97**	**DRN112M4**	860
3.3	10700	446	116300	1.85	**F157**			820
4.8	7220	302	120000	2.8	**FF157**			920
5.4	6510	273	120000	3.1				
6.3	5480	232	120000	3.7				
7.5	4650	197	120000	4.3				
2.7	13400	549	87800	0.90	**FA127**			460
3.0	12000	495	90000	1.00	**FAF127**	**R77**	**DRN112M4**	500
3.4	10400	428	90000	1.15	**F127**			500
3.9	9120	376	90000	1.30	**FF127**			540
4.4	8100	333	48700	0.95	**FA107**			310
5.0	7080	291	51400	1.10	**FAF107**	**R77**	**DRN112M4**	330
5.7	6200	255	53500	1.25	**F107**			325
					FF107			355
5.8	6640	254.40*	52500	1.15				
6.8	5620	215.37	54900	1.35				
7.4	5200	199.31	55900	1.50	**FA107**			270
8.2	4660	178.64	57000	1.65	**FAF107**			290
9.1	4210	161.28*	58000	1.85	**F107**	-	**DRN112M4**	290
10	3820	146.49	58800	2.0	**FF107**			315
11	3390	129.97	59600	2.3				
12	3080	117.94	60200	2.5				
14	2650	101.38*	61000	2.9				
8.4	4560	174.87	29100	0.95				
9.4	4080	156.30	30500	1.05				
10	3670	140.71	31700	1.15				
11	3320	127.42	32500	1.30				
13	2950	112.99	33400	1.45	**FA97**			195
14	2670	102.16	34100	1.60	**FAF97**	-	**DRN112M4**	220
15	2550	97.58	34300	1.70	**F97**			205
16	2340	89.85	34700	1.85	**FF97**			235
18	2100	80.31	35200	2.1				
20	1890	72.29	35600	2.3				
22	1710	65.47	35900	2.5				

P_N = 4.0 kW

n_a min^{-1}	M_a Nm	i	F_{Ra} N	SEW f_B	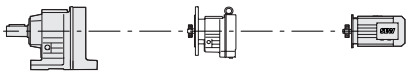			m kg
13	2860	109.49	23500	1.05				
15	2550	97.89	24600	1.15				
17	2300	88.01	24500	1.30	**FA87**			135
19	1990	76.39	24100	1.50	**FAF87**	-	**DRN112M4**	145
21	1780	68.40	23800	1.70	**F87**			140
26	1480	56.75	23100	2.0	**FF87**			155
29	1310	50.36	22600	2.2				
32	1180	45.28	22200	2.4				
22	1730	66.46	13900	0.85				
25	1520	58.32	15600	1.00				
26	1440	55.27	16100	1.05	**FA77**			93
30	1260	48.37	17100	1.20	**FAF77**	-	**DRN112M4**	100
34	1140	43.58	17700	1.30	**F77**			97
38	1000	38.23	18300	1.50	**FF77**			110
43	880	33.74	18700	1.70				
49	780	29.91	19000	1.90				
57	665	25.54	19300	2.2				
46	820	31.51	18900	1.70				
51	750	28.75	19100	1.90	**FA77**			92
57	665	25.50*	19300	2.3	**FAF77**	-	**DRN112M4**	98
68	560	21.43	19600	2.7	**F77**			96
74	515	19.70	19700	2.9	**FF77**			105
53	715	27.41	11200	1.20				
58	655	25.13	11600	1.35				
66	575	22.05	12000	1.50				
70	545	20.90*	12200	1.60				
80	475	18.29	12500	1.80				
89	430	16.48	12700	2.0				
101	375	14.46	12900	2.3				
115	335	12.76	13000	2.6	**FA67**			69
129	295	11.31	13000	3.0	**FAF67**	-	**DRN112M4**	76
152	250	9.66	13000	3.5	**F67**			72
161	235	9.08	12900	2.6	**FF67**			78
170	225	8.60	12700	2.7				
194	196	7.53	12300	3.1				
216	177	6.78	12000	3.5				
246	155	5.95	11600	3.9				
279	137	5.25	11300	4.3				
314	121	4.66	10900	4.6				
368	104	3.97	10500	4.8				
69	550	21.17	6490	1.15				
77	500	19.11	6480	1.25				
87	440	16.81	6440	1.45				
92	415	15.88	6420	1.50				
108	355	13.52	6320	1.80				
119	320	12.29	6240	1.95	**FA57**			66
138	280	10.64	6120	2.3	**FAF57**	-	**DRN112M4**	71
157	245	9.31	5820	1.75	**F57**			66
179	215	8.19	5700	1.95	**FF57**			73
189	200	7.73	5650	2.1				
222	172	6.58	5480	2.4				
245	156	5.98	5380	2.7				
282	135	5.18	5220	3.1				

P_N = 5.5 kW

n_a min^{-1}	M_a Nm	i	F_{Ra} N	SEW f_B	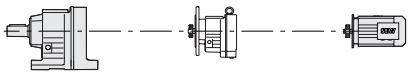			m kg
2.2	22500	680	76100	0.90				
2.5	19000	576	97200	1.05				
2.9	16500	503	104400	1.20				
3.3	14800	446	108500	1.35	**FA157**			810
4.2	11600	353	114900	1.75	**FAF157**	**R97**	**DRN132S4**	870
4.8	10000	302	117200	2.0	**F157**			830
5.4	9050	273	118500	2.2	**FF157**			940
6.3	7630	232	120000	2.6				
7.2	6640	202	120000	3.0				
7.4	6470	197	120000	3.1				
3.5	13900	418	86700	0.85				
3.9	12500	374	89600	0.95	**FA127**			495
4.7	10400	312	90000	1.15	**FAF127**	**R87**	**DRN132S4**	530
5.0	9740	293	90000	1.25	**F127**			530
5.7	8590	259	90000	1.40	**FF127**			570
6.5	7420	223	90000	1.60				
					FA127			475
3.4	14400	428	85800	0.85	**FAF127**	**R77**	**DRN132S4**	510
3.9	12600	376	89300	0.95	**F127**			510
					FF127			550
6.8	7740	215.37	49600	1.00				
7.3	7170	199.31	51200	1.05				
8.2	6420	178.64	53000	1.20				
9.1	5800	161.28*	54500	1.30	**FA107**			285
10	5270	146.49	55700	1.45	**FAF107**			305
11	4670	129.97	57000	1.65	**F107**	**-**	**DRN132S4**	300
12	4240	117.94	57900	1.80	**FF107**			325
14	3640	101.38*	59100	2.1				
16	3320	92.47*	59800	2.3				
17	3020	83.99	60400	2.5				
17	3180	88.49	60000	2.4				
11	4580	127.42	29000	0.95				
13	4060	112.99	30600	1.05				
14	3670	102.16	31700	1.15				
15	3510	97.58	32100	1.25				
16	3230	89.85	32800	1.35	**FA97**			210
17	3110	86.59	33100	1.40	**FAF97**	**-**	**DRN132S4**	230
18	2890	80.31	33600	1.50	**F97**			215
19	2720	75.63	33900	1.60	**FF97**			250
20	2600	72.29	34200	1.65				
22	2350	65.47	34700	1.85				
25	2090	58.06	34400	2.1				
28	1890	52.49	33700	2.3				
17	3160	88.01	11900	0.95				
19	2750	76.39	21200	1.10				
21	2460	68.40	21200	1.20	**FA87**			145
26	2040	56.75	21000	1.45	**FAF87**			155
29	1810	50.36	20700	1.60	**F87**	**-**	**DRN132S4**	150
32	1630	45.28	20500	1.75	**FF87**			165
37	1410	39.30	20100	1.95				
42	1270	35.19	19700	2.1				
50	1050	29.20	19100	2.4				
43	1220	33.92	19600	2.1	**FA87**			140
51	1030	28.78	19000	2.4	**FAF87**	**-**	**DRN132S4**	155
55	950	26.50	18700	3.2	**F87**			145
62	850	23.68	18300	3.5	**FF87**			160

P_N = 5.5 kW

n_a min^{-1}	M_a Nm	i	F_{Ra} N	SEW f_B	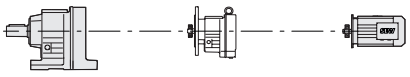			m kg
30	1740	48.37	13900	0.85				
34	1570	43.58	15300	0.95	**FA77**			105
38	1370	38.23	16500	1.10	**FAF77**	-	**DRN132S4**	110
43	1210	33.74	17400	1.25	**F77**			110
49	1080	29.91	18000	1.40	**FF77**			120
57	920	25.54	18600	1.60				
57	920	25.50*	18600	1.65				
68	770	21.43	19100	1.95	**FA77**			105
74	710	19.70	19200	2.1	**FAF77**	-	**DRN132S4**	110
84	630	17.49	19400	2.4	**F77**			105
93	560	15.64*	19600	2.7	**FF77**			120
104	505	14.06	19200	3.0				
120	440	12.20	18500	3.4				
66	795	22.05	10500	1.10				
70	750	20.90*	10900	1.15				
80	660	18.29	11500	1.30				
89	590	16.48	11900	1.45				
101	520	14.46	12300	1.65				
115	460	12.76	12600	1.90				
129	405	11.31	12800	2.1	**FA67**			81
151	345	9.66	12900	2.5	**FAF67**	-	**DRN132S4**	87
161	325	9.08	12400	1.85	**F67**			84
170	310	8.60	12200	1.95	**FF67**			90
194	270	7.53	11900	2.3				
215	245	6.78	11600	2.5				
246	215	5.95	11300	2.9				
278	189	5.25	11000	3.1				
314	167	4.66	10700	3.4				
368	143	3.97	10300	3.5				
87	605	16.81	5460	1.05				
92	570	15.88	5490	1.10				
108	485	13.52	5530	1.30				
119	440	12.29	5530	1.45	**FA57**			77
137	385	10.64	5500	1.65	**FAF57**	-	**DRN132S4**	83
178	295	8.19	5180	1.45	**F57**			78
189	280	7.73	5150	1.50	**FF57**			84
222	235	6.58	5060	1.75				
244	215	5.98	4990	1.95				
282	186	5.18	4880	2.2				

P_N = 7.5 kW

n_a min^{-1}	M_a Nm	i	F_{Ra} N	SEW f_B	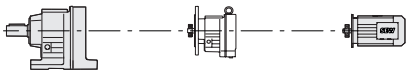			m kg
2.9	22600	503	74000	0.90				
3.3	20200	446	93000	1.00				
4.2	15800	353	106100	1.25	**FA157**			830
4.9	13700	302	110900	1.45	**FAF157**	**R97**	**DRN132M4**	890
5.4	12300	273	113500	1.60	**F157**			850
6.3	10400	232	116600	1.90	**FF157**			950
7.3	9080	202	118500	2.2				
7.5	8850	197	118800	2.3				

P_N = 7.5 kW

n_a min^{-1}	M_a Nm	i	F_{Ra} N	SEW f_B	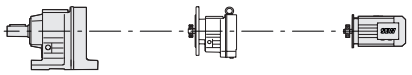			m kg
4.7	14200	312	86300	0.85	**FA127**	**R87**	**DRN132M4**	510
5.0	13300	293	88000	0.90	**FAF127**			550
5.7	11700	259	90000	1.00	**F127**			550
6.6	10100	223	90000	1.20	**FF127**			590
7.4	8950	198	90000	1.35				
3.7	19600	267.43	95300	1.00	**FA157**	**-**	**DRN160M6**	740
4.5	15900	217.62*	105900	1.25	**FAF157**			800
5.5	13000	178.20*	112200	1.55	**F157**			760
6.0	11900	162.96	114200	1.70	**FF157**			870
6.9	10400	141.80*	116700	1.95				
7.8	9150	125.14	118400	2.2				
9.0	7940	108.49	119800	2.5				
10	7060	96.53*	120000	2.8				
11	6280	85.80*	120000	3.2				
12	5740	78.46	120000	3.5				
14	4990	68.28*	120000	4.0				
16	4410	60.25	120000	4.5				
19	3820	52.24	118700	5.2				
5.7	12500	170.83	89500	0.95	**FA127**	**-**	**DRN160M6**	485
6.4	11200	153.67*	90000	1.05	**FAF127**			520
7.8	9170	125.37	90000	1.30	**F127**			520
8.6	8360	114.34	90000	1.45	**FF127**			570
8.6	8330	170.83	90000	1.45	**FA127**	**-**	**DRN132M4**	445
9.6	7500	153.67*	90000	1.60	**FAF127**			485
12	6120	125.37	90000	1.95	**F127**			480
					FF127			530
8.2	8720	178.64	47000	0.90	**FA107**	**-**	**DRN132M4**	300
9.1	7870	161.28*	49300	1.00	**FAF107**			320
10	7150	146.49	51200	1.05	**F107**			320
11	6340	129.97	53200	1.20	**FF107**			345
12	5750	117.94	54600	1.35				
14	4950	101.38*	56400	1.55				
16	4510	92.47*	57400	1.70				
17	4100	83.99	58200	1.85				
17	4320	88.49	57800	1.80				
20	3640	74.52	59200	2.1				
22	3300	67.62	59800	2.3				
15	4760	97.58	24600	0.90	**FA97**	**-**	**DRN132M4**	225
16	4380	89.85	29600	1.00	**FAF97**			245
17	4220	86.59	30100	1.00	**F97**			235
18	3920	80.31	31000	1.10	**FF97**			265
19	3690	75.63	31600	1.15				
20	3530	72.29	32000	1.20				
22	3190	65.47	32200	1.35				
25	2830	58.06	31700	1.50				
28	2560	52.49	31300	1.70				
33	2170	44.49	30500	2.0				
38	1900	38.86	29800	2.3				
45	1590	32.50	28800	2.7				
34	2110	43.28	30400	1.45	**FA97**	**-**	**DRN132M4**	220
40	1790	36.64	29500	1.70	**FAF97**			240
43	1650	33.91	29000	2.6	**F97**			225
48	1480	30.39	28400	2.9	**FF97**			260

P_N = 7.5 kW

n_a min^{-1}	M_a Nm	i	F_{Ra} N	SEW f_B	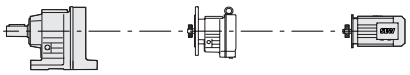			m kg
26	2770	56.75	18100	1.10				
29	2460	50.36	18200	1.20	**FA87**			160
32	2210	45.28	18200	1.30	**FAF87**	-	**DRN132M4**	175
37	1920	39.30	18100	1.40	**F87**			165
42	1720	35.19	17900	1.50	**FF87**			185
50	1420	29.20	17600	1.75				
51	1400	28.78	17500	1.75				
55	1290	26.50	17400	2.3				
62	1160	23.68	17100	2.6	**FA87**			160
69	1040	21.32*	16800	2.9	**FAF87**	-	**DRN132M4**	170
76	940	19.31	16500	3.2	**F87**			165
86	840	17.12	16100	3.6	**FF87**			180
95	755	15.48	15800	4.0				
44	1650	33.74	14700	0.90	**FA77**			125
49	1460	29.91	16000	1.05	**FAF77**	-	**DRN132M4**	130
57	1250	25.54	17200	1.15	**F77**			125
					FF77			135
58	1240	25.50*	17200	1.20				
68	1050	21.43	18100	1.45				
75	960	19.70	18500	1.55				
84	850	17.49	18800	1.75				
94	765	15.64*	18900	1.95				
104	685	14.06	18500	2.2				
120	595	12.20	17900	2.5	**FA77**			120
134	535	10.93	17500	2.8	**FAF77**	-	**DRN132M4**	130
158	455	9.30	16400	2.4	**F77**			125
178	405	8.26	16000	2.7	**FF77**			135
199	360	7.39	15600	3.0				
221	325	6.64	15300	3.3				
255	280	5.76	14800	3.8				
284	250	5.16	14400	4.3				
343	210	4.28	13700	4.8				

P_N = 9.2 kW

n_a min^{-1}	M_a Nm	i	F_{Ra} N	SEW f_B	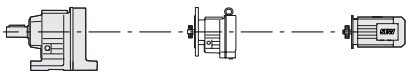			m kg
4.2	19500	353	95600	1.05				
4.9	16800	302	103600	1.20	**FA157**			840
5.4	15200	273	107700	1.30	**FAF157**	R97	**DRN132L4**	890
6.4	12800	232	112600	1.55	**F157**			860
7.3	11200	202	115500	1.80	**FF157**			960
7.5	10900	197	116000	1.85				
5.7	14400	259	85800	0.85	**FA127**			520
6.6	12400	223	89600	0.95	**FAF127**	R87	**DRN132L4**	560
7.4	11000	198	90000	1.10	**F127**			560
					FF127			600
8.6	10200	170.83	90000	1.20				
9.6	9180	153.67*	90000	1.30	**FA127**			455
12	7490	125.37	90000	1.60	**FAF127**	-	**DRN132L4**	490
13	6830	114.34	90000	1.75	**F127**			490
15	5910	98.95	90000	2.0	**FF127**			540

P_N = 9.2 kW

n_a min^{-1}	M_a Nm	i	F_{Ra} N	SEW f_B	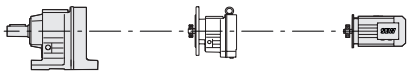			m kg
10	8750	146.49	46800	0.90				
11	7770	129.97	49600	1.00				
12	7050	117.94	51500	1.10				
15	6060	101.38*	53900	1.25	**FA107**			310
16	5530	92.47*	55100	1.40	**FAF107**	-	**DRN132L4**	330
18	5020	83.99	56300	1.55	**F107**			325
20	4450	74.52	57500	1.70	**FF107**			355
22	4040	67.62	58300	1.90				
25	3470	58.12*	58000	2.2				
29	3030	50.73	56500	2.5				
18	4800	80.31	23100	0.90				
19	4520	75.63	29200	0.95				
20	4320	72.29	29600	1.00				
22	3910	65.47	29600	1.10	**FA97**			235
25	3470	58.06	29500	1.25	**FAF97**	-	**DRN132L4**	255
28	3140	52.49	29300	1.35	**F97**			240
33	2660	44.49	28800	1.60	**FF97**			275
38	2320	38.86	28300	1.85				
45	1940	32.50	27500	2.2				
43	2030	33.91	27700	2.1	**FA97**			230
48	1820	30.39	27200	2.4	**FAF97**	-	**DRN132L4**	250
54	1640	27.44*	26700	2.6	**F97**			235
59	1490	24.92	26200	2.9	**FF97**			270
29	3010	50.36	16000	1.00				
32	2710	45.28	16300	1.05	**FA87**			170
37	2350	39.30	16400	1.15	**FAF87**	-	**DRN132L4**	185
42	2100	35.19	16400	1.25	**F87**			175
50	1740	29.20	16300	1.45	**FF87**			190
55	1580	26.50	16200	1.90				
62	1420	23.68	16000	2.1	**FA87**			165
69	1270	21.32*	15900	2.4	**FAF87**	-	**DRN132L4**	180
76	1150	19.31	15600	2.6	**F87**			175
86	1020	17.12	15400	2.9	**FF87**			190
95	930	15.48	15100	3.2				
112	785	13.12*	14600	3.8				
75	1180	19.70	17600	1.25				
84	1050	17.49	18100	1.45				
94	930	15.64*	18200	1.60				
105	840	14.06	17900	1.80				
120	730	12.20	17400	2.1	**FA77**			130
135	655	10.93	17100	2.3	**FAF77**	-	**DRN132L4**	135
158	555	9.30	15900	1.95	**F77**			135
178	495	8.26	15600	2.2	**FF77**			145
199	440	7.39	15200	2.5				
221	395	6.64	14900	2.7				
255	345	5.76	14500	3.1				
285	310	5.16	14100	3.5				
343	255	4.28	13500	4.0				

P_N = 11.0 kW

n_a min^{-1}	M_a Nm	i	F_{Ra} N	SEW f_B	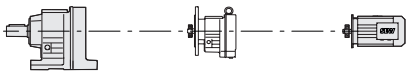			m kg
4.2	23300	353	55600	0.85				
4.9	20100	302	93500	1.00	**FA157**			870
5.4	18100	273	99800	1.10	**FAF157**	**R97**	**DRN160M4**	930
6.4	15300	232	107300	1.30	**F157**			890
7.3	13400	202	111600	1.50	**FF157**			1000
7.5	13000	197	112300	1.55				
6.6	14900	223	84800	0.80	**FA127**			550
7.5	13100	198	88300	0.90	**FAF127**	**R87**	**DRN160M4**	590
8.9	11000	166	90000	1.10	**F127**			590
					FF127			630
5.5	19100	267.43	96900	1.05				
6.8	15500	217.62*	106900	1.30				
8.3	12700	178.20*	112800	1.55				
9.0	11600	162.96	114800	1.70	**FA157**			740
10	10100	141.80*	117100	2.0	**FAF157**	-	**DRN160M4**	800
12	8920	125.14	118700	2.2	**F157**			760
14	7740	108.49	120000	2.6	**FF157**			870
15	6880	96.53*	120000	2.9				
17	6120	85.80*	117500	3.3				
19	5600	78.46	115100	3.6				
22	4870	68.28*	111400	4.1				
8.6	12200	170.83	90000	1.00				
9.6	11000	153.67*	90000	1.10	**FA127**			485
12	8940	125.37	90000	1.35	**FAF127**	-	**DRN160M4**	520
13	8150	114.34	90000	1.45	**F127**			520
15	7060	98.95	90000	1.70	**FF127**			570
17	6230	87.31*	90000	1.95				
20	5380	75.41*	88300	2.2				
12	8410	117.94	47800	0.90				
15	7230	101.38*	51000	1.05				
16	6590	92.47*	52600	1.15	**FA107**			340
18	5990	83.99	54100	1.30	**FAF107**	-	**DRN160M4**	365
20	5310	74.52	55600	1.45	**F107**			360
22	4820	67.62	56700	1.60	**FF107**			385
25	4140	58.12*	56200	1.85				
29	3620	50.73	54900	2.1				
34	3070	43.03	53300	2.5				
44	2410	33.79*	50700	3.1	**FA107**			330
53	1970	27.57	48500	4.0	**FAF107**	-	**DRN160M4**	355
59	1790	25.14	47500	4.4	**F107**			350
					FF107			375
23	4670	65.47	26900	0.90				
25	4140	58.06	27100	1.05	**FA97**			265
28	3740	52.49	27100	1.15	**FAF97**	-	**DRN160M4**	290
33	3170	44.49	26900	1.35	**F97**			275
38	2770	38.86	26700	1.55	**FF97**			305
45	2320	32.50	26200	1.85				
43	2420	33.91	26300	1.80	**FA97**			260
48	2170	30.39	25900	2.0	**FAF97**	-	**DRN160M4**	285
54	1960	27.44*	25500	2.2	**F97**			270
59	1780	24.92	25200	2.4	**FF97**			300
67	1580	22.11	24600	2.7				
37	2800	39.30	14600	0.95	**FA87**			200
42	2510	35.19	14800	1.05	**FAF87**	-	**DRN160M4**	215
50	2080	29.20	15000	1.20	**F87**			210
					FF87			225

P_N = 11.0 kW

n_a min^{-1}	M_a Nm	i	F_{Ra} N	SEW f_B	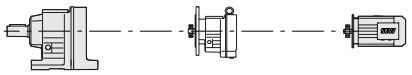			m kg
56	1890	26.50	15000	1.60	**FA87** **FAF87** **F87** **FF87**	-	**DRN160M4**	200
62	1690	23.68	15000	1.80				210
69	1520	21.32*	14900	1.95				205
76	1380	19.31	14800	2.2				220
86	1220	17.12	14600	2.5				
95	1100	15.48	14400	2.7				
112	940	13.12*	14000	3.2				
75	1400	19.70	16300	1.05	**FA77** **FAF77** **F77** **FF77**	-	**DRN160M4**	160
84	1250	17.49	17200	1.20				170
94	1120	15.64*	17600	1.35				165
105	1000	14.06	17300	1.50				175
121	870	12.20	16900	1.70				
135	780	10.93	16600	1.90				
158	665	9.30	15400	1.65				
178	590	8.26	15100	1.85				
199	525	7.39	14800	2.1				
222	475	6.64	14500	2.3				
256	410	5.76	14100	2.6				
285	370	5.16	13800	2.9				
344	305	4.28	13300	3.3				

P_N = 15.0 kW

n_a min^{-1}	M_a Nm	i	F_{Ra} N	SEW f_B	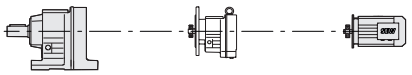			m kg
5.4	24800	273	0	0.80	**FA157** **FAF157** **F157** **FF157**	**R97**	**DRN160L4**	880
6.4	21000	232	90200	0.95				940
7.3	18300	202	99400	1.10				900
7.5	17800	197	100900	1.10				1010
6.8	21100	217.62*	89500	0.95	**FA157** **FAF157** **F157** **FF157**	-	**DRN160L4**	760
8.3	17300	178.20*	102200	1.15				810
9.0	15800	162.96	106100	1.25				780
10	13800	141.80*	110700	1.45				880
12	12200	125.14	113800	1.65				
14	10500	108.49	116500	1.90				
15	9380	96.53*	115600	2.1				
17	8340	85.80*	113000	2.4				
19	7620	78.46	111000	2.6				
22	6630	68.28*	107800	3.0				
24	5860	60.25	104900	3.4				
12	12200	125.37	88900	1.00	**FA127** **FAF127** **F127** **FF127**	-	**DRN160L4**	500
13	11100	114.34	88300	1.10				540
15	9620	98.95	86900	1.25				540
17	8480	87.31*	85500	1.40				580
20	7330	75.41*	83700	1.65				
21	6810	70.07	82700	1.75				
16	8990	92.47*	46200	0.85	**FA107** **FAF107** **F107** **FF107**	-	**DRN160L4**	360
17	8600	88.49	47300	0.90				380
18	8160	83.99	48500	0.95				375
20	7240	74.52	51000	1.05				400
22	6570	67.62	52700	1.15				
25	5650	58.12*	52200	1.35				
29	4930	50.73	51400	1.55				
34	4180	43.03	50300	1.85				
39	3650	37.61	49300	2.1				
46	3090	31.80	47900	2.5				

P_N = 15.0 kW

n_a min^{-1}	M_a Nm	i	F_{Ra} N	SEW f_B	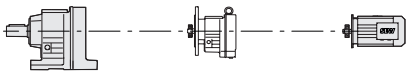			m kg
44	3280	33.79*	48400	2.3	**FA107**	-	**DRN160L4**	350
53	2680	27.57	46600	2.9	**FAF107**			370
59	2440	25.14	45800	3.2	**F107**			365
68	2110	21.76*	44400	3.7	**FF107**			390
33	4320	44.49	22900	1.00	**FA97**	-	**DRN160L4**	285
38	3780	38.86	23100	1.15	**FAF97**			305
45	3160	32.50	23200	1.35	**F97**			290
					FF97			325
43	3300	33.91	23200	1.30				
49	2950	30.39	23200	1.45				
54	2670	27.44*	23000	1.60				
59	2420	24.92	22900	1.80	**FA97**	-	**DRN160L4**	275
67	2150	22.11	22600	2.0	**FAF97**			300
73	1950	20.07	22400	2.2	**F97**			285
85	1680	17.25*	21900	2.6	**FF97**			315
98	1460	15.06	21400	2.9				
115	1240	12.77	20800	3.5				
132	1080	11.16	20200	3.8				
56	2570	26.50	12400	1.15				
62	2300	23.68	12600	1.30				
69	2070	21.32*	12800	1.45				
76	1880	19.31	12800	1.60				
86	1660	17.12	12900	1.80				
95	1500	15.48	12800	2.0	**FA87**	-	**DRN160L4**	215
112	1270	13.12*	12700	2.4	**FAF87**			230
129	1110	11.46	12600	2.7	**F87**			220
154	930	9.58	12300	3.1	**FF87**			235
178	810	8.29	11700	1.90				
200	715	7.35	11500	2.1				
222	645	6.65	11300	2.4				
262	545	5.63	11000	2.8				
300	480	4.92	10700	3.2				
358	400	4.12	10300	3.7				

P_N = 18.5 kW

n_a min^{-1}	M_a Nm	i	F_{Ra} N	SEW f_B	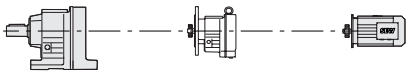			m kg
					FA157	**R97**	**DRN180M4**	910
7.3	22600	202	74900	0.90	**FAF157**			960
7.5	21900	197	86400	0.90	**F157**			930
					FF157			1030
8.3	21300	178.20*	88900	0.95				
9.1	19500	162.96	95600	1.05				
10	16900	141.80*	103200	1.20				
12	15000	125.14	108200	1.35				
14	13000	108.49	112300	1.55	**FA157**	-	**DRN180M4**	780
15	11500	96.53*	111200	1.75	**FAF157**			840
17	10300	85.80*	109100	1.95	**F157**			800
19	9380	78.46	107400	2.1	**FF157**			910
22	8160	68.28*	104700	2.5				
25	7200	60.25	102100	2.8				
28	6240	52.24	99200	3.2				
45	3890	32.55	89100	5.1				

P_N = 18.5 kW

n_a min^{-1}	M_a Nm	i	F_{Ra} N	SEW f_B	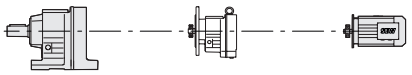			m kg
13	13700	114.34	82200	0.90				
15	11800	98.95	81600	1.00				
17	10400	87.31*	80900	1.15	**FA127**			520
20	9010	75.41*	79700	1.35	**FAF127**	-	**DRN180M4**	560
21	8380	70.07	79000	1.45	**F127**			560
23	7640	63.91	78000	1.55	**FF127**			600
27	6610	55.31	76300	1.80				
30	5830	48.80	74800	2.1				
20	8910	74.52	46400	0.85				
22	8080	67.62	48700	0.95	**FA107**			380
25	6950	58.12*	48700	1.10	**FAF107**	-	**DRN180M4**	400
29	6060	50.73	48400	1.25	**F107**			395
34	5140	43.03	47700	1.50	**FF107**			425
39	4500	37.61	47000	1.70				
46	3800	31.80	45900	2.0				
44	4040	33.79*	46300	1.85	**FA107**			370
54	3300	27.57	44900	2.4	**FAF107**	-	**DRN180M4**	390
59	3010	25.14	44200	2.6	**F107**			385
68	2600	21.76*	43100	3.0	**FF107**			415
					FA97			305
38	4640	38.86	20100	0.95	**FAF97**	-	**DRN180M4**	325
45	3880	32.50	20600	1.10	**F97**			310
					FF97			345
54	3280	27.44*	20900	1.30				
59	2980	24.92	20900	1.45				
67	2640	22.11	20900	1.65	**FA97**			300
74	2400	20.07	20800	1.80	**FAF97**	-	**DRN180M4**	320
86	2060	17.25*	20500	2.1	**F97**			305
98	1800	15.06	20200	2.4	**FF97**			340
116	1530	12.77	19700	2.8				
132	1330	11.16	19300	3.1				
69	2550	21.32*	10900	1.20				
77	2310	19.31	11100	1.30				
86	2050	17.12	11400	1.45				
95	1850	15.48	11500	1.60				
113	1570	13.12*	11600	1.90	**FA87**			235
129	1370	11.46	11600	2.2	**FAF87**			250
154	1150	9.58	11500	2.5	**F87**	-	**DRN180M4**	245
178	990	8.29	10900	1.55	**FF87**			260
201	880	7.35	10800	1.75				
222	795	6.65	10700	1.95				
262	675	5.63	10400	2.3				
300	590	4.92	10200	2.6				
359	490	4.12	9890	3.0				

P_N = 22 kW

n_a min^{-1}	M_a Nm	i	F_{Ra} N	SEW f_B	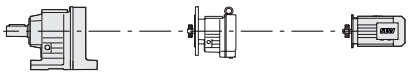			m kg
9.1	23200	162.96	59000	0.85				
10	20200	141.80*	93200	1.00				
12	17800	125.14	100800	1.10				
14	15400	108.49	107100	1.30				
15	13700	96.53*	106800	1.45				
17	12200	85.80*	105200	1.65	**FA157**			790
19	11200	78.46	103900	1.80	**FAF157**	-	**DRN180L4**	850
22	9710	68.28*	101600	2.1	**F157**			820
25	8570	60.25	99400	2.3	**FF157**			920
28	7430	52.24	96800	2.7				
32	6610	46.48*	94600	3.0				
37	5700	40.06	91700	3.5				
45	4630	32.55	87600	4.3				
15	14100	98.95	76400	0.85				
17	12400	87.31*	76300	0.95				
20	10700	75.41*	75700	1.10	**FA127**			540
21	9970	70.07	75300	1.20	**FAF127**	-	**DRN180L4**	580
23	9090	63.91	74600	1.30	**F127**			580
27	7870	55.31	73400	1.55	**FF127**			620
30	6940	48.80	72200	1.75				
35	5990	42.15	70600	2.0				
25	8270	58.12*	45200	0.95				
29	7220	50.73	45300	1.05	**FA107**			395
34	6120	43.03	45100	1.25	**FAF107**	-	**DRN180L4**	415
39	5350	37.61	44700	1.45	**F107**			410
46	4520	31.80	44000	1.70	**FF107**			440
44	4810	33.79*	44300	1.55				
54	3920	27.57	43300	2.0	**FA107**			385
59	3580	25.14	42700	2.2	**FAF107**	-	**DRN180L4**	405
68	3100	21.76*	41800	2.5	**F107**			400
77	2730	19.20*	40900	2.9	**FF107**			430
54	3900	27.44*	18700	1.10				
59	3550	24.92	18900	1.20				
67	3150	22.11	19100	1.35	**FA97**			315
74	2850	20.07	19200	1.50	**FAF97**	-	**DRN180L4**	335
86	2450	17.25*	19100	1.75	**F97**			320
98	2140	15.06	19000	2.0	**FF97**			355
116	1820	12.77	18700	2.4				
132	1590	11.16	18400	2.6				
69	3030	21.32*	9030	1.00				
77	2750	19.31	9460	1.10				
86	2440	17.12	9870	1.25				
95	2200	15.48	10100	1.35				
113	1870	13.12*	10400	1.60				
129	1630	11.46	10600	1.85	**FA87**			255
154	1360	9.58	10600	2.1	**FAF87**	-	**DRN180L4**	265
178	1180	8.29	10100	1.30	**F87**			260
201	1050	7.35	10100	1.45	**FF87**			275
222	950	6.65	10000	1.60				
262	800	5.63	9890	1.90				
300	700	4.92	9740	2.2				
359	585	4.12	9490	2.5				

P_N = 30 kW

n_a min^{-1}	M_a Nm	i	F_{Ra} N	SEW f_B	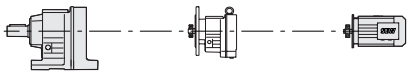			m kg
14	21000	108.49	90100	0.95				
15	18700	96.53*	96900	1.05				
17	16600	85.80*	96400	1.20				
19	15200	78.46	95800	1.30				
22	13200	68.28*	94500	1.50	**FA157**			900
25	11700	60.25	93200	1.70	**FAF157**	-	**DRN200L4**	960
28	10100	52.24	91400	2.0	**F157**			920
32	9000	46.48*	89800	2.2	**FF157**			1030
37	7750	40.06	87600	2.6				
45	6300	32.55	84200	3.2				
54	5340	27.60	81500	3.7				
20	14600	75.41*	64600	0.80				
21	13600	70.07	65700	0.90				
23	12400	63.91	66800	0.95				
27	10700	55.31	66700	1.10	**FA127**			650
30	9450	48.80	66300	1.25	**FAF127**	-	**DRN200L4**	690
35	8160	42.15	65500	1.45	**F127**			680
40	7220	37.28	64600	1.65	**FF127**			730
47	6060	31.33	63200	2.0				
58	4900	25.30	61100	2.5				
55	5200	26.86	61700	1.65	**FA127**			640
60	4760	24.57	60800	1.80	**FAF127**	-	**DRN200L4**	670
69	4140	21.38	59300	2.9	**F127**			670
78	3650	18.87	57900	3.0	**FF127**			720
34	8330	43.03	39200	0.90	**FA107**			500
39	7280	37.61	39600	1.05	**FAF107**	-	**DRN200L4**	530
47	6160	31.80	39700	1.25	**F107**			520
					FF107			550
54	5340	27.57	39500	1.45				
59	4870	25.14	39300	1.60				
68	4210	21.76*	38800	1.85	**FA107**			495
77	3720	19.20*	38300	2.1	**FAF107**	-	**DRN200L4**	520
89	3210	16.58	37500	2.4	**F107**			510
101	2840	14.67	36900	2.7	**FF107**			540
120	2390	12.33	35800	2.9				
149	1930	9.96	34400	3.4				
67	4280	22.11	15100	1.00				
74	3880	20.07	15500	1.10				
86	3340	17.25*	16000	1.30				
98	2910	15.06	16300	1.50				
116	2470	12.77	16400	1.75	**FA97**			425
133	2160	11.16	16400	1.90	**FAF97**	-	**DRN200L4**	445
163	1750	9.06	15400	1.35	**F97**			430
180	1590	8.22	15300	1.50	**FF97**			465
209	1370	7.07	15100	1.70				
240	1190	6.17	14900	1.90				
283	1010	5.23	14600	2.1				
324	890	4.57	14300	2.3				

P_N = 37 kW

n_a min^{-1}	M_a Nm	i	F_{Ra} N	SEW f_B	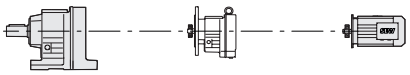			m kg
15	23000	96.53*	63700	0.85				
17	20500	85.80*	88600	1.00				
19	18700	78.46	88700	1.05				
22	16300	68.28*	88400	1.25	**FA157**			930
25	14400	60.25	87800	1.40	**FAF157**	-	**DRN225S4**	990
28	12500	52.24	86700	1.60	**F157**			950
32	11100	46.48*	85600	1.80	**FF157**			1060
37	9550	40.06	83900	2.1				
46	7760	32.55	81300	2.6				
54	6580	27.60	79000	3.0				
27	13200	55.31	59200	0.90				
30	11600	48.80	60800	1.05	**FA127**			680
35	10000	42.15	61100	1.20	**FAF127**	-	**DRN225S4**	720
40	8890	37.28	60700	1.35	**F127**			720
47	7470	31.33	59900	1.60	**FF127**			760
59	6030	25.30	58400	2.0				
55	6400	26.86	58900	1.35				
60	5860	24.57	58200	1.45				
69	5100	21.38	57000	2.4				
79	4500	18.87	55900	2.5	**FA127**			670
91	3900	16.36	54500	2.8	**FAF127**	-	**DRN225S4**	710
102	3470	14.55	53300	3.2	**F127**			700
118	2990	12.54	51800	3.3	**FF127**			750
145	2430	10.19	49500	3.9				
167	2110	8.86	47700	3.3				
188	1880	7.88	46400	3.2				
54	6570	27.57	36200	1.20				
59	5990	25.14	36300	1.30				
68	5190	21.76*	36200	1.50				
77	4580	19.20*	36000	1.70				
89	3950	16.58	35600	2.0	**FA107**			530
101	3500	14.67	35100	2.2	**FAF107**	-	**DRN225S4**	550
120	2940	12.33	34300	2.4	**F107**			540
149	2370	9.96	33200	2.7	**FF107**			570
153	2310	9.69	32400	2.1				
177	2000	8.37	31600	2.4				
200	1770	7.40	31000	2.6				
238	1480	6.22	30000	3.1				

P_N = 45 kW

n_a min^{-1}	M_a Nm	i	F_{Ra} N	SEW f_B	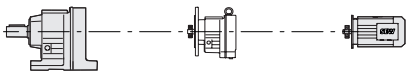			m kg
19	22800	78.46	70300	0.90				
22	19800	68.28*	81400	1.00				
25	17500	60.25	81600	1.15	**FA157**			930
28	15100	52.24	81300	1.30	**FAF157**	-	**DRN225M4**	990
32	13500	46.48*	80800	1.50	**F157**			950
37	11600	40.06	79800	1.70	**FF157**			1060
46	9440	32.55	78000	2.1				
54	8000	27.60	76100	2.5				
30	14200	48.80	51600	0.85				
35	12200	42.15	54300	1.00	**FA127**			680
40	10800	37.28	55800	1.10	**FAF127**	-	**DRN225M4**	720
47	9080	31.33	56100	1.30	**F127**			720
59	7340	25.30	55400	1.65	**FF127**			760

P_N = 45 kW

n_a min^{-1}	M_a Nm	i	F_{Ra} N	SEW f_B	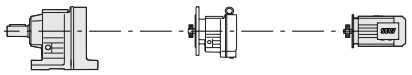			m kg
55	7790	26.86	55600	1.10				
60	7120	24.57	55200	1.20				
69	6200	21.38	54500	1.95				
79	5470	18.87	53600	2.0				
91	4740	16.36	52500	2.3	**FA127**			670
102	4220	14.55	51600	2.6	**FAF127**	-	**DRN225M4**	710
118	3640	12.54	50300	2.8	**F127**			700
145	2960	10.19	48300	3.2	**FF127**			750
167	2570	8.86	46500	2.7				
188	2290	7.88	45400	2.6				
218	1970	6.80	44000	3.6				
268	1600	5.52	41900	3.8				
54	7990	27.57	31500	1.00				
59	7290	25.14	32600	1.10				
68	6310	21.76*	33200	1.25				
77	5570	19.20*	33300	1.40				
89	4810	16.58	33300	1.65	**FA107**			530
101	4250	14.67	33100	1.80	**FAF107**	-	**DRN225M4**	550
120	3570	12.33	32600	1.95	**F107**			540
149	2890	9.96	31900	2.3	**FF107**			570
153	2810	9.69	30900	1.75				
177	2430	8.37	30400	2.0				
200	2150	7.40	29800	2.1				
238	1800	6.22	29000	2.6				

P_N = 55 kW

n_a min^{-1}	M_a Nm	i	F_{Ra} N	SEW f_B	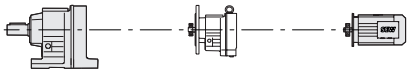			m kg
25	21400	60.25	73800	0.95				
28	18500	52.24	74600	1.10	**FA157**			1080
32	16500	46.48*	74800	1.20	**FAF157**	-	**DRN250M4**	1140
37	14200	40.06	74700	1.40	**F157**			1110
46	11500	32.55	73800	1.75	**FF157**			1210
54	9780	27.60	72600	2.0				
52	10100	28.60*	72900	1.90				
58	9010	25.43	71900	2.2	**FA157**			1080
67	7850	22.16	70600	2.5	**FAF157**	-	**DRN250M4**	1140
75	7010	19.77	69400	2.8	**F157**			1100
88	5970	16.85	67500	3.1	**FF157**			1210
40	13200	37.28	47000	0.90	**FA127**			830
47	11100	31.33	50000	1.10	**FAF127**	-	**DRN250M4**	870
59	8970	25.30	51600	1.35	**F127**			870
					FF127			910
69	7580	21.38	51300	1.60				
79	6690	18.87	50800	1.65				
91	5800	16.36	50100	1.90				
102	5160	14.55	49400	2.1	**FA127**			820
118	4450	12.54	48400	2.3	**FAF127**			850
145	3610	10.19	46800	2.6	**F127**	-	**DRN250M4**	850
167	3140	8.86	45100	2.2	**FF127**			900
188	2790	7.88	44100	2.2				
218	2410	6.80	42900	2.9				
268	1960	5.52	41000	3.1				
317	1660	4.68	39600	3.6				

P_N = 75 kW

n_a min^{-1}	M_a Nm	i	F_{Ra} N	SEW f_B	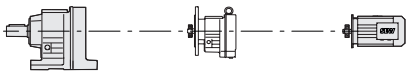			m kg
32	22500	46.48*	62900	0.90	**FA157**	-	**DRN280S4**	1130
37	19400	40.06	64400	1.05	**FAF157**			1190
46	15700	32.55	65400	1.25	**F157**			1150
54	13300	27.60	65500	1.50	**FF157**			1260
52	13800	28.60*	65500	1.40				
58	12300	25.43	65400	1.65				
67	10700	22.16	64900	1.85	**FA157**	-	**DRN280S4**	1130
75	9550	19.77	64300	2.0	**FAF157**			1190
88	8140	16.85	63200	2.3	**F157**			1150
106	6750	13.96	61600	2.7	**FF157**			1260
124	5760	11.92	60100	3.0				
59	12200	25.30	40000	1.00	**FA127** **FAF127** **F127** **FF127**	-	**DRN280S4**	880 920 910 960
69	10300	21.38	43000	1.15				
79	9120	18.87	44400	1.20				
91	7900	16.36	45200	1.40				
102	7030	14.55	45000	1.55				
118	6060	12.54	44600	1.65	**FA127**	-	**DRN280S4**	870
145	4930	10.19	43700	1.95	**FAF127**			900
167	4280	8.86	42200	1.65	**F127**			900
188	3810	7.88	41600	1.55	**FF127**			950
218	3280	6.80	40700	2.1				
268	2670	5.52	39300	2.3				
317	2260	4.68	38100	2.7				

P_N = 90 kW

n_a min^{-1}	M_a Nm	i	F_{Ra} N	SEW f_B	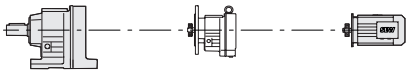			m kg
37	23200	40.06	56600	0.85	**FA157**	-	**DRN280M4**	1250
46	18900	32.55	59100	1.05	**FAF157**			1310
54	16000	27.60	60200	1.25	**F157**			1270
					FF157			1380
67	12900	22.16	60600	1.55				
75	11500	19.77	60500	1.70	**FA157**	-	**DRN280M4**	1240
88	9780	16.85	59900	1.90	**FAF157**			1300
106	8100	13.96	58900	2.2	**F157**			1260
124	6920	11.92	57800	2.5	**FF157**			1370
59	14700	25.30	29600	0.80	**FA127** **FAF127** **F127** **FF127**	-	**DRN280M4**	990 1030 1030 1070
91	9490	16.36	39900	1.15				
102	8440	14.55	41100	1.30				
118	7280	12.54	41800	1.35				
145	5910	10.19	41400	1.60	**FA127**	-	**DRN280M4**	980
167	5140	8.86	40100	1.35	**FAF127**			1020
188	4570	7.88	39700	1.30	**F127**			1020
218	3940	6.80	39000	1.80	**FF127**			1060
268	3200	5.52	37900	1.85				
316	2720	4.68	36900	2.2				

P_N = 110 kW

n_a min^{-1}	M_a Nm	i	F_{Ra} N	SEW f_B	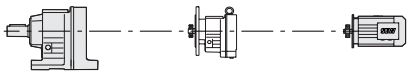			m kg
46	23000	32.55	50800	0.85	**FA157**	-	**DRN315S4**	1490
54	19500	27.60	53100	1.05	**FAF157**			1550
					F157			1510
					FF157			1620
67	15600	22.16	54900	1.25	**FA157**	-	**DRN315S4/ ERF/NS**	1490
					FAF157			1550
					F157			1510
					FF157			1610
75	14000	19.77	55400	1.40	**FA157**	-	**DRN315S4**	1490
88	11900	16.85	55600	1.55	**FAF157**			1550
107	9860	13.96	55300	1.80	**F157**			1510
125	8410	11.92	54700	2.1	**FF157**			1610

P_N = 132 kW

n_a min^{-1}	M_a Nm	i	F_{Ra} N	SEW f_B	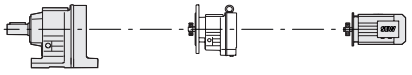			m kg
67	18800	22.16	48700	1.05	**FA157**	-	**DRN315M4/ ERF/NS**	1510
75	16700	19.77	49800	1.15	**FAF157**			1570
					F157			1530
					FF157			1630
88	14300	16.85	50900	1.30	**FA157**	-	**DRN315M4**	1510
107	11800	13.96	51400	1.50	**FAF157**			1570
125	10100	11.92	51400	1.70	**F157**			1530
					FF157			1630

P_N = 160 kW

n_a min^{-1}	M_a Nm	i	F_{Ra} N	SEW f_B	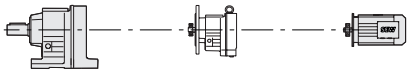			m kg
88	17300	16.85	44800	1.10	**FA157**	-	**DRN315L4**	1640
106	14400	13.96	46400	1.25	**FAF157**			1700
125	12300	11.92	47100	1.40	**F157**			1660
					FF157			1770

P_N = 200 kW

n_a min^{-1}	M_a Nm	i	F_{Ra} N	SEW f_B	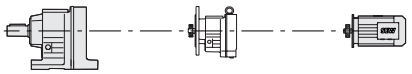			m kg
88	21600	16.85	36200	0.85	**FA157**	-	**DRN315H4/ ERF/NS**	1760
					FAF157			1820
					F157			1780
					FF157			1880
107	17900	13.96	39200	1.00	**FA157**	-	**DRN315H4**	1760
125	15300	11.92	41000	1.15	**FAF157**			1820
					F157			1780
					FF157			1880

4.3.3 Selection tables for low output speeds F..R..DRN.. in Nm

$M_{a\,max}$ = 130 Nm

n_a min^{-1}	i	F_{Ra} N	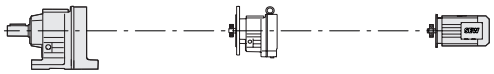			m kg
0.15	8972	4500				
0.18	7736	4500				
0.19	7211	4500				
0.22	6303	4500				
0.25	5435	4500	**FA27**			14
0.28	4855	4500	**FAF27**	**R17**	**DRN63MS4**	14
0.33	4243	4500	**F27**			14
0.37	3715	4500	**FF27**			15
0.43	3247	4500				
0.48	2878	4500				
0.55	2515	4500				
0.62	2217	4500				
0.71	1948	4500				
0.76	1826	4500				
0.86	1610	4500				
0.99	1399	4500				
1.1	1230	4500				
1.5	948	4500				
1.7	829	4500				
1.9	731	4500	**FA27**			13
2.2	633	4500	**FAF27**	**R17**	**DRN63MS4**	14
2.5	551	4500	**F27**			14
2.8	489	4500	**FF27**			15
3.2	427	4500				
3.6	379	4500				
4.2	326	4500				
4.8	288	4500				
5.5	251	4500				
6.3	221	4500				
0.73	1898	4500				
0.84	1645	4500				
0.9	1525	4500				
1	1322	4500				
1.2	1146	4500	**FA27**			13
1.4	1013	4500	**FAF27**	**R17**	**DRN63MS4**	14
1.6	890	4500	**F27**			14
1.8	778	4500	**FF27**			15
2	682	4500				
2.3	602	4500				
2.7	520	4500				
3	458	4500				
3.5	397	4500				
4	342	4500	**FA27**			13
4.6	302	4500	**FAF27**	**R17**	**DRN63MS4**	14
5.2	266	4500	**F27**			14
5.9	236	4500	**FF27**			14
6.5	211	4500				
7.4	186	4500				
8	172	4500	**FA27**			14
9	153	4500	**FAF27**	**R17**	**DRN63M4**	15
11	130	4500	**F27**			15
			FF27			15

$M_{a\,max}$ = 130 Nm

n_a min^{-1}	i	F_{Ra} N	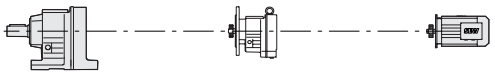			m kg
9.7	142	4500	**FA27** **FAF27** **F27** **FF27**	**R17**	**DRN63M4**	14 15 14 15
11	124	4500				
13	109	4500	**FA27** **FAF27** **F27** **FF27**	**R17**	**DRN71MS4**	14 15 15 16
15	96	4500				

$M_{a\,max}$ = 215 Nm

n_a min^{-1}	i	F_{Ra} N	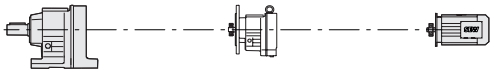			m kg
7.6	186	4070	**FA37** **FAF37** **F37** **FF37**	**R17**	**DRN71MS4**	21 22 21 23

$M_{a\,max}$ = 205 Nm

n_a min^{-1}	i	F_{Ra} N	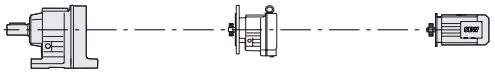			m kg
3	466	4220	**FA37** **FAF37** **F37** **FF37**	**R17**	**DRN63MS4**	20 21 20 22
3.4	411	4220				
3.8	364	4220				
8.4	167	4220	**FA37** **FAF37** **F37** **FF37**	**R17**	**DRN71MS4**	21 22 21 23

$M_{a\,max}$ = 220 Nm

n_a min^{-1}	i	F_{Ra} N	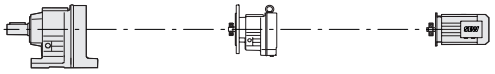			m kg
2	698	3980	**FA37** **FAF37** **F37** **FF37**	**R17**	**DRN63MS4**	20 21 20 22
6.3	219	3980	**FA37** **FAF37** **F37** **FF37**	**R17**	**DRN63M4**	20 22 21 22

$M_{a\,max}$ = 230 Nm

n_a min^{-1}	i	F_{Ra} N	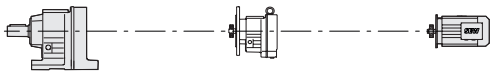			m kg
0.17	8193	3810				
0.2	7064	3810				
0.21	6585	3810				
0.24	5756	3810				
0.28	4963	3810				
0.31	4434	3810	**FA37**			20
0.36	3875	3810	**FAF37**	**R17**	**DRN63MS4**	21
0.41	3392	3810	**F37**			20
0.47	2965	3810	**FF37**			22
0.53	2587	3810				
0.6	2284	3810				
0.69	1997	3810				
0.79	1742	3810				
0.89	1545	3810				
0.72	1929	3810				
0.82	1679	3810				
0.89	1550	3810				
1	1356	3810	**FA37**			20
1.2	1180	3810	**FAF37**	**R17**	**DRN63MS4**	21
1.3	1044	3810	**F37**			20
1.5	914	3810	**FF37**			22
1.7	808	3810				
2.2	616	3810				
2.5	544	3810				
1	1370	3810				
1.2	1198	3810				
1.3	1047	3810				
1.5	915	3810				
1.7	807	3810	**FA37**			19
2	707	3810	**FAF37**	**R17**	**DRN63MS4**	21
2.2	617	3810	**F37**			20
2.6	538	3810	**FF37**			22
2.9	477	3810				
3.4	412	3810				
3.8	365	3810				
			FA37			19
4.2	326	3810	**FAF37**	**R17**	**DRN63MS4**	21
			F37			20
			FF37			22
4.3	322	3810	**FA37**			20
5	278	3810	**FAF37**	**R17**	**DRN63M4**	22
5.7	242	3810	**F37**			21
6.2	221	3810	**FF37**			23
			FA37			20
4.8	285	3810	**FAF37**	**R17**	**DRN63M4**	22
5.5	250	3810	**F37**			21
			FF37			22
			FA37			21
7.2	195	3810	**FAF37**	**R17**	**DRN71MS4**	22
8.4	168	3810	**F37**			21
			FF37			23
9.6	147	3810	**FA37**			22
11	127	3810	**FAF37**	**R17**	**DRN71M4**	24
12	121	3810	**F37**			23
13	108	3810	**FF37**			24

$M_{a\,max}$ = 230 Nm

n_a min^{-1}	i	F_{Ra} N	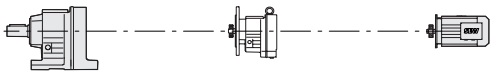			m kg
9.7	145	3810	**FA37**	**R17**	**DRN71M4**	22
11	129	3810	**FAF37**			23
12	118	3810	**F37**			22
			FF37			24
15	98	3810	**FA37**	**R17**	**DRN80MK4**	24
17	87	3810	**FAF37**			26
			F37			25
			FF37			26
16	91	3810	**FA37**	**R17**	**DRN80MK4**	24
			FAF37			26
			F37			25
			FF37			27

$M_{a\,max}$ = 450 Nm

n_a min^{-1}	i	F_{Ra} N	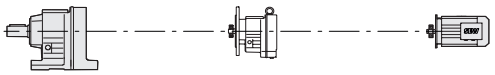			m kg
0.11	12251	8590	**FA47**	**R17**	**DRN63MS4**	25
0.13	10619	8590	**FAF47**			27
0.14	9846	8590	**F47**			25
0.16	8534	8590	**FF47**			28
0.19	7460	8590				
0.21	6536	8590				
0.24	5746	8590				
0.27	5022	8590				
0.31	4401	8590				
0.36	3883	8590				
0.4	3443	8590				
0.46	2976	8590				
0.52	2629	8590				
0.6	2304	8590				
0.68	2033	8590				
0.55	2519	8590	**FA47**	**R17**	**DRN63MS4**	24
0.58	2394	8590	**FAF47**			27
0.64	2172	8590	**F47**			25
0.68	2025	8590	**FF47**			28
0.78	1770	8590				
0.88	1576	8590				
1	1363	8590				
1.2	1192	8590				
1.3	1061	8590				
1.5	931	8590				
1.7	822	8590				
2	706	8590				
0.77	1785	8590	**FA47**	**R17**	**DRN63MS4**	24
0.87	1578	8590	**FAF47**			27
1	1364	8590	**F47**			25
1.2	1203	8590	**FF47**			28
1.3	1049	8590				
1.5	918	8590				
1.7	809	8590				
2	700	8590				
2.2	619	8590	**FA47**	**R17**	**DRN63M4**	25
			FAF47			27
			F47			25
			FF47			29

$M_{a\,max}$ = 450 Nm

n_a min^{-1}	i	F_{Ra} N	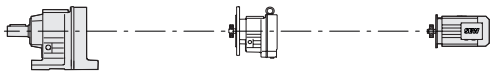			m kg
2.2	622	8590	**FA47**	**R17**	**DRN63M4**	25
2.5	543	8590	**FAF47**			28
2.9	475	8590	**F47**			26
3.3	419	8590	**FF47**			29
2.6	524	8590	**FA47**	**R17**	**DRN63M4**	24
2.8	489	8590	**FAF47**			27
3.2	427	8590	**F47**			25
			FF47			28
3.7	381	8590	**FA47**	**R17**	**DRN71MS4**	25
4.2	334	8590	**FAF47**			28
4.8	295	8590	**F47**			26
			FF47			29
3.8	370	8590	**FA47**	**R17**	**DRN71MS4**	26
4.3	324	8590	**FAF47**			28
			F47			26
			FF47			30
4.9	288	8590	**FA47**	**R17**	**DRN71M4**	27
5.7	249	8590	**FAF47**			30
6.5	218	8590	**F47**			28
			FF47			31
5.6	253	8590	**FA47**	**R17**	**DRN71M4**	26
6.5	217	8590	**FAF47**			29
			F47			27
			FF47			30
7.4	193	8590	**FA47**	**R17**	**DRN80MK4**	29
8.2	175	8590	**FAF47**			32
9.8	147	8590	**F47**			30
			FF47			33
7.6	190	8590	**FA47**	**R17**	**DRN80MK4**	28
8.1	178	8590	**FAF47**			31
9.6	149	8590	**F47**			29
			FF47			32
11	130	8590	**FA47**	**R17**	**DRN80M4**	32
			FAF47			35
			F47			33
			FF47			36
11	131	8590	**FA47**	**R17**	**DRN80M4**	31
			FAF47			34
			F47			32
			FF47			35

$M_{a\,max}$ = 630 Nm

n_a min^{-1}	i	F_{Ra} N	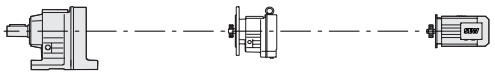			m kg
0.09	14832	8180	**FA57** **FAF57** **F57** **FF57**	**R37**	**DRN63MS4**	39 45 40 46
0.1	13604	8180				
0.11	12602	8180				
0.12	11252	8180				
0.14	9986	8180				
0.16	8787	8180				
0.17	7908	8180				
0.2	6913	8180				
0.23	6030	8180				
0.26	5289	8180				
0.3	4654	8180				
0.34	4060	8180				
0.39	3564	8180				
0.44	3161	8180				
0.5	2737	8180				
0.57	2409	8180				
0.65	2131	8180				
0.75	1840	8180				
0.85	1623	8180				
0.96	1439	8180				
1.1	1238	8180				
0.48	2854	8180	**FA57** **FAF57** **F57** **FF57**	**R37**	**DRN63MS4**	39 44 39 45
0.54	2576	8180				
0.61	2266	8180				
0.69	2012	8180				
0.77	1791	8180				
0.85	1617	8180				
0.97	1422	8180				
1.1	1243	8180				
1.3	1066	8180				
1.5	949	8180				
1.3	1106	8180	**FA57** **FAF57** **F57** **FF57**	**R37**	**DRN63MS4**	39 45 39 46
1.4	967	8180				
1.6	851	8180	**FA57** **FAF57** **F57** **FF57**	**R37**	**DRN63M4**	40 46 40 47
1.9	738	8180				
2.1	646	8180				
1.6	856	8180	**FA57** **FAF57** **F57** **FF57**	**R37**	**DRN63M4**	40 45 40 46
1.8	749	8180				
2.1	658	8180				
2.5	558	8180	**FA57** **FAF57** **F57** **FF57**	**R37**	**DRN71MS4**	41 46 41 47
2.8	506	8180				
3.1	452	8180				
2.6	549	8180	**FA57** **FAF57** **F57** **FF57**	**R37**	**DRN71MS4**	40 46 40 47
2.9	483	8180				
3.3	426	8180	**FA57** **FAF57** **F57** **FF57**	**R37**	**DRN71MS4**	40 46 40 47

$M_{a\,max}$ = 630 Nm

n_a min^{-1}	i	F_{Ra} N	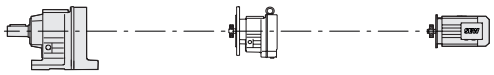			m kg
3.7	382	8180	**FA57**	**R37**	**DRN71M4**	41
4.3	330	8180	**FAF57**			47
4.8	298	8180	**F57**			41
			FF57			48
3.7	386	8180	**FA57**	**R37**	**DRN71M4**	42
4.2	338	8180	**FAF57**			47
			F57			42
			FF57			49
5.5	262	8180	**FA57**	**R37**	**DRN80MK4**	43
6.4	226	8180	**FAF57**			49
7.2	200	8180	**F57**			44
			FF57			50
5.6	255	8180	**FA57**	**R37**	**DRN80MK4**	44
7.1	201	8180	**FAF57**			50
			F57			44
			FF57			51
8	181	8180	**FA57**	**R37**	**DRN80M4**	48
9.3	155	8180	**FAF57**			53
			F57			48
			FF57			54
8.5	170	8180	**FA57**	**R37**	**DRN80M4**	47
9.5	152	8180	**FAF57**			52
			F57			47
			FF57			54
11	134	8180	**FA57**	**R37**	**DRN90S4**	53
			FAF57			58
			F57			53
			FF57			59

$M_{a\,max}$ = 870 Nm

n_a min^{-1}	i	F_{Ra} N	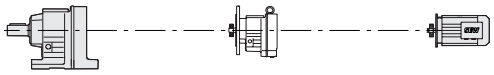			m kg
0.07	19199	9840				
0.08	17610	9840				
0.09	14992	9840				
0.11	12926	9840				
0.12	11480	9840				
0.14	10220	9840				
0.15	8933	9840				
0.17	7940	9840	**FA67**	**R37**	**DRN63MS4**	43
0.19	7096	9840	**FAF67**			50
0.23	6080	9840	**F67**			46
0.26	5341	9840	**FF67**			52
0.29	4690	9840				
0.34	4091	9840				
0.39	3574	9840				
0.44	3133	9840				
0.5	2756	9840				
0.57	2439	9840				

$M_{a\,max}$ = 870 Nm

n_a min^{-1}	i	F_{Ra} N	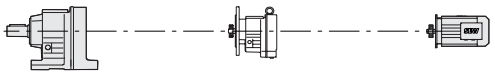			m kg
0.41	3377	9840	**FA67** **FAF67** **F67** **FF67**	**R37**	**DRN63MS4**	42
0.47	2912	9840				49
0.51	2714	9840				45
0.58	2372	9840				51
0.65	2126	9840				
0.74	1859	9840				
0.85	1631	9840				
0.96	1437	9840				
1.1	1256	9840				
0.66	2106	9840	**FA67** **FAF67** **F67** **FF67**	**R37**	**DRN63MS4**	43
0.73	1884	9840				49
0.84	1635	9840				46
0.97	1429	9840				52
1.1	1271	9840	**FA67** **FAF67** **F67** **FF67**	**R37**	**DRN63M4**	44
1.3	1102	9840				50
1.4	970	9840				47
1.6	858	9840				53
1.2	1126	9840	**FA67** **FAF67** **F67** **FF67**	**R37**	**DRN63M4**	43
1.4	984	9840				49
1.6	864	9840				46
						52
1.9	755	9840	**FA67** **FAF67** **F67** **FF67**	**R37**	**DRN71MS4**	45
2.2	641	9840				51
						47
						53
2	722	9840	**FA67** **FAF67** **F67** **FF67**	**R37**	**DRN71MS4**	44
2.2	634	9840				50
						46
						52
2.5	572	9840	**FA67** **FAF67** **F67** **FF67**	**R37**	**DRN71M4**	46
2.8	509	9840				52
3.2	437	9840				49
						55
2.6	539	9840	**FA67** **FAF67** **F67** **FF67**	**R37**	**DRN71M4**	45
						51
						48
						54
2.8	500	9840	**FA67** **FAF67** **F67** **FF67**	**R37**	**DRN71M4**	45
3.1	454	9840				51
3.6	392	9840				47
						53
3.7	384	9840	**FA67** **FAF67** **F67** **FF67**	**R37**	**DRN80MK4**	48
4.2	338	9840				54
4.7	305	9840				51
						57
4.3	333	9840	**FA67** **FAF67** **F67** **FF67**	**R37**	**DRN80MK4**	47
4.8	297	9840				53
5.5	261	9840				50
						56
5.6	257	9840	**FA67** **FAF67** **F67** **FF67**	**R37**	**DRN80M4**	51
6.2	231	9840				58
7	205	9840				54
						60

$M_{a\,max}$ = 870 Nm

n_a min^{-1}	i	F_{Ra} N	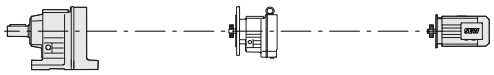			m kg
6.1	238	9840	**FA67**	**R37**	**DRN80M4**	50
7.2	200	9840	**FAF67**			57
			F67			53
			FF67			59
8.3	175	9840	**FA67**	**R37**	**DRN90S4**	57
			FAF67			64
			F67			60
			FF67			66
8.3	176	9840	**FA67**	**R37**	**DRN90S4**	56
			FAF67			62
			F67			59
			FF67			65

$M_{a\,max}$ = 1110 Nm

n_a min^{-1}	i	F_{Ra} N	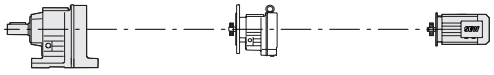			m kg
0.28	4931	17900	**FA77**	**R37**	**DRN63MS4**	64
0.31	4523	17900	**FAF77**			71
0.36	3851	17900	**F77**			68
0.42	3320	17900	**FF77**			79
0.45	3095	17900				
0.51	2705	17900				
0.54	2536	17900				
0.62	2238	17900				
0.68	2039	17900				
0.78	1759	17900				
0.84	1639	17900				
0.96	1433	17900	**FA77**	**R37**	**DRN63M4**	65
1	1343	17900	**FAF77**			72
1.2	1185	17900	**F77**			69
1.3	1051	17900	**FF77**			80
1.6	893	17900	**FA77**	**R37**	**DRN71MS4**	66
			FAF77			72
			F77			69
			FF77			80
1.7	815	17900	**FA77**	**R37**	**DRN71MS4**	65
			FAF77			72
			F77			69
			FF77			80
2	706	17900	**FA77**	**R37**	**DRN71M4**	67
2.1	660	17900	**FAF77**			73
2.5	571	17900	**F77**			70
			FF77			81
3	485	17900	**FA77**	**R37**	**DRN80MK4**	69
3.3	433	17900	**FAF77**			75
3.9	370	17900	**F77**			73
4.1	346	17900	**FF77**			83
4.9	292	17900	**FA77**	**R37**	**DRN80M4**	72
			FAF77			79
			F77			76
			FF77			87

$M_{a\ max}$ = 1500 Nm

n_a min^{-1}	i	F_{Ra} N	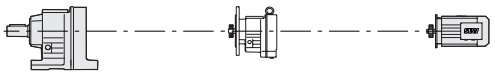			m kg
0.07	19180	15700	**FA77** **FAF77** **F77** **FF77**	**R37**	**DRN63MS4**	66 72 69 80
0.08	17593	15700				
0.09	14978	15700				
0.09	16128	15700				
0.1	13731	15700				
0.11	12049	15700				
0.13	11035	15700				
0.14	9683	15700				
0.16	8464	15700				
0.18	7520	15700				
0.21	6580	15700				
0.24	5808	15700				
0.27	5026	15700				
0.31	4435	15700				
0.36	3832	15700				
0.41	3381	15700				
0.46	2978	15700				
0.53	2613	15700				
0.6	2284	15700				
0.68	2029	15700	**FA77** **FAF77** **F77** **FF77**	**R37**	**DRN63M4**	66 73 70 81
0.8	1728	15700	**FA77** **FAF77** **F77** **FF77**	**R37**	**DRN63M4**	66 73 70 81
0.89	1544	15700				
1	1354	15700	**FA77** **FAF77** **F77** **FF77**	**R37**	**DRN71MS4**	67 73 71 81
1.2	1200	15700				
1.3	1053	15700				
1.6	910	15700	**FA77** **FAF77** **F77** **FF77**	**R37**	**DRN71M4**	68 75 72 82
1.8	810	15700				
2	710	15700				
2.3	615	15700	**FA77** **FAF77** **F77** **FF77**	**R37**	**DRN80MK4**	70 77 74 85
2.7	538	15700				
3	480	15700				
3.5	413	15700	**FA77** **FAF77** **F77** **FF77**	**R37**	**DRN80M4**	74 80 77 88
3.9	367	15700				
4.5	323	15700	**FA77** **FAF77** **F77** **FF77**	**R37**	**DRN90S4**	80 86 83 94
5.2	280	15700				
5.9	247	15700				
6.6	221	15700	**FA77** **FAF77** **F77** **FF77**	**R37**	**DRN90L4**	83 89 86 97
7.4	199	15700				

$M_{a\,max}$ = 3000 Nm

n_a min^{-1}	i	F_{Ra} N	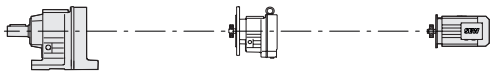			m kg
0.06	23042	19800	**FA87** **FAF87** **F87** **FF87**	**R57**	**DRN63MS4**	120
0.07	20462	19800				130
0.08	18238	19800				125
0.09	15877	19800				140
0.1	14099	19800				
0.11	12205	19800				
0.13	10433	19800				
0.15	9381	19800				
0.17	8142	19800				
0.19	7100	19800				
0.22	6273	19800				
0.25	5510	19800				
0.28	4954	19800				
0.28	4952	19800	**FA87** **FAF87** **F87** **FF87**	**R57**	**DRN63MS4**	115 130 120 135
0.3	4562	19800				
0.32	4245	19800	**FA87** **FAF87** **F87** **FF87**	**R57**	**DRN63M4**	120 130 125 140
0.37	3721	19800				
0.35	3919	19800	**FA87** **FAF87** **F87** **FF87**	**R57**	**DRN63M4**	115 130 120 135
0.39	3503	19800				
0.43	3196	19800				
0.48	2857	19800				
0.42	3244	19800	**FA87** **FAF87** **F87** **FF87**	**R57**	**DRN63M4**	120 130 125 140
0.48	2881	19800				
0.55	2576	19800	**FA87** **FAF87** **F87** **FF87**	**R57**	**DRN71MS4**	120 130 125 140
0.64	2199	19800				
0.56	2524	19800	**FA87** **FAF87** **F87** **FF87**	**R57**	**DRN71MS4**	115 130 120 140
0.66	2134	19800				
0.73	1930	19800	**FA87** **FAF87** **F87** **FF87**	**R57**	**DRN71M4**	120 135 125 140
0.83	1709	19800				
0.95	1493	19800				
0.74	1913	19800	**FA87** **FAF87** **F87** **FF87**	**R57**	**DRN71M4**	120 130 125 140
0.82	1717	19800				
0.96	1476	19800				
1.1	1278	19800	**FA87** **FAF87** **F87** **FF87**	**R57**	**DRN80MK4**	120 135 125 140
1.3	1142	19800				
1.5	988	19800				
1.1	1300	19800	**FA87** **FAF87** **F87** **FF87**	**R57**	**DRN80MK4**	120 135 130 145
1.3	1148	19800				
1.4	1010	19800				

$M_{a\,max}$ = 3000 Nm

n_a min^{-1}	i	F_{Ra} N	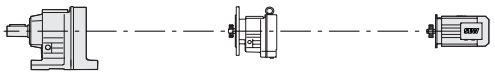			m kg
1.6	883	19800	**FA87**	**R57**	**DRN80M4**	125
			FAF87			135
1.9	748	19800	**F87**			130
			FF87			145
1.6	887	19800	**FA87**	**R57**	**DRN80M4**	125
1.9	780	19800	**FAF87**			140
2.1	674	19800	**F87**			130
			FF87			145
2.2	662	19800	**FA87**	**R57**	**DRN80M4**	125
			FAF87			135
			F87			130
			FF87			145
2.4	609	19800	**FA87**	**R57**	**DRN90S4**	130
2.8	515	19800	**FAF87**			145
3.2	452	19800	**F87**			140
			FF87			155
2.5	592	19800	**FA87**	**R57**	**DRN90S4**	130
2.8	519	19800	**FAF87**			140
3.1	468	19800	**F87**			135
			FF87			150
3.7	398	19800	**FA87**	**R57**	**DRN90L4**	130
4.2	350	19800	**FAF87**			145
			F87			140
			FF87			155
4.2	345	19800	**FA87**	**R57**	**DRN90L4**	135
			FAF87			150
			F87			140
			FF87			155
4.6	315	19800	**FA87**	**R57**	**DRN100LS4**	135
5.2	281	19800	**FAF87**			150
6	240	19800	**F87**			140
			FF87			155
4.8	300	19800	**FA87**	**R57**	**DRN100LS4**	140
5.8	249	19800	**FAF87**			150
			F87			145
			FF87			160
6.9	211	19800	**FA87**	**R57**	**DRN100L4**	145
7.5	193	19800	**FAF87**			155
			F87			150
			FF87			165

$M_{a\,max}$ = 4300 Nm

n_a min^{-1}	i	F_{Ra} N	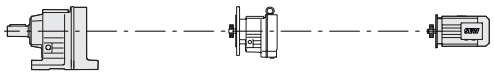			m kg
0.05	26911	29900				
0.05	29211	29900				
0.06	23814	29900				
0.07	20813	29900				
0.08	18119	29900	**FA97**	**R57**	**DRN63MS4**	185
0.09	15472	29900	**FAF97**			205
0.1	14022	29900	**F97**			190
0.11	12324	29900	**FF97**			225
0.13	10838	29900				
0.14	9576	29900				
0.17	8318	29900				
0.19	7328	29900				
0.22	6338	29900	**FA97**	**R57**	**DRN63MS4**	180
			FAF97			200
			F97			185
			FF97			220
0.21	6469	29900	**FA97**	**R57**	**DRN63M4**	185
0.24	5615	29900	**FAF97**			205
0.28	4961	29900	**F97**			190
0.32	4333	29900	**FF97**			225
0.24	5680	29900	**FA97**	**R57**	**DRN63M4**	180
0.27	5016	29900	**FAF97**			200
0.31	4367	29900	**F97**			185
			FF97			220
0.36	3906	29900	**FA97**	**R57**	**DRN71MS4**	185
0.42	3352	29900	**FAF97**			205
			F97			190
			FF97			225
0.36	3914	29900	**FA97**	**R57**	**DRN71MS4**	180
0.42	3357	29900	**FAF97**			200
0.47	3009	29900	**F97**			185
			FF97			220
0.49	2907	29900	**FA97**	**R57**	**DRN71M4**	185
0.55	2553	29900	**FAF97**			205
0.63	2245	29900	**F97**			195
0.72	1970	29900	**FF97**			225
0.58	2448	29900	**FA97**	**R57**	**DRN71M4**	180
0.64	2199	29900	**FAF97**			200
0.72	1971	29900	**F97**			190
			FF97			220
0.82	1741	29900	**FA97**	**R57**	**DRN80MK4**	185
0.98	1468	29900	**FAF97**			205
1.1	1316	29900	**F97**			190
			FF97			225
0.83	1722	29900	**FA97**	**R57**	**DRN80MK4**	190
0.94	1527	29900	**FAF97**			210
1.1	1327	29900	**F97**			195
			FF97			230
1.2	1171	29900	**FA97**	**R57**	**DRN80M4**	190
1.4	1022	29900	**FAF97**			215
			F97			200
			FF97			230

$M_{a\,max}$ = 4300 Nm

n_a min^{-1}	i	F_{Ra} N	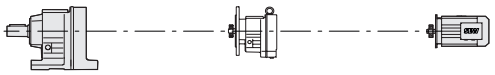			m kg
1.2	1189	29900	**FA97** **FAF97** **F97** **FF97**	**R57**	**DRN80M4**	185 210 195 225
1.4	1023	29900				
1.6	892	29900	**FA97** **FAF97** **F97** **FF97**	**R57**	**DRN90S4**	190 215 200 230
1.9	760	29900				
2.2	667	29900				
1.6	898	29900	**FA97** **FAF97** **F97** **FF97**	**R57**	**DRN90S4**	195 220 205 240
1.9	784	29900				
2.1	690	29900				
2.4	605	29900	**FA97** **FAF97** **F97** **FF97**	**R57**	**DRN90L4**	200 220 210 240
2.8	529	29900				
2.6	569	29900	**FA97** **FAF97** **F97** **FF97**	**R57**	**DRN90L4**	195 215 200 235
2.9	510	29900				
3.1	473	29900				
3.1	467	29900	**FA97** **FAF97** **F97** **FF97**	**R57**	**DRN100LS4**	205 225 210 245
3.6	406	29900				
4	363	29900				
3.6	403	29900	**FA97** **FAF97** **F97** **FF97**	**R57**	**DRN100LS4**	200 220 205 240
4	361	29900				
4.6	317	29900				
5.1	285	29900	**FA97** **FAF97** **F97** **FF97**	**R57**	**DRN100L4**	210 235 220 250
6	245	29900				
5.3	275	29900	**FA97** **FAF97** **F97** **FF97**	**R57**	**DRN100L4**	205 225 215 245
6	242	29900				
7	208	29900	**FA97** **FAF97** **F97** **FF97**	**R57**	**DRN112M4**	220 245 230 260
7.5	195	29900				

$M_{a\,max}$ = 7680 Nm

n_a min^{-1}	i	F_{Ra} N	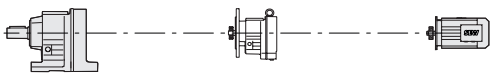			m kg
0.05	25375	49800	**FA107** **FAF107** **F107** **FF107**	**R77**	**DRN63MS4**	275 295 290 320
0.06	21652	49800				
0.07	18933	49800				
0.08	16888	49800				
0.09	14767	49800				
0.12	11348	49800	**FA107** **FAF107** **F107** **FF107**	**R77**	**DRN63M4**	275 295 290 320
0.14	10039	49800				
0.16	8548	49800				
0.18	7674	49800				

$M_{a\,max}$ = 7680 Nm

n_a min^{-1}	i	F_{Ra} N	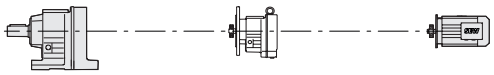			m kg
0.21	6767	49800	**FA107**	**R77**	**DRN71MS4**	275
0.24	5954	49800	**FAF107**			295
			F107			295
			FF107			320
0.27	5223	49800	**FA107**	**R77**	**DRN71M4**	275
0.31	4567	49800	**FAF107**			300
0.36	3948	49800	**F107**			295
			FF107			320
0.41	3521	49800	**FA107**	**R77**	**DRN80MK4**	280
			FAF107			300
			F107			295
			FF107			325
0.47	3037	49800	**FA107**	**R77**	**DRN80MK4**	280
0.52	2756	49800	**FAF107**			300
0.61	2369	49800	**F107**			295
			FF107			325
0.7	2068	49800	**FA107**	**R77**	**DRN80M4**	280
0.79	1826	49800	**FAF107**			305
			F107			300
			FF107			325
0.91	1597	49800	**FA107**	**R77**	**DRN90S4**	285
1	1401	49800	**FAF107**			310
1.2	1243	49800	**F107**			305
			FF107			330
1.3	1087	49800	**FA107**	**R77**	**DRN90L4**	290
1.5	950	49800	**FAF107**			310
			F107			305
			FF107			335
1.7	834	49800	**FA107**	**R77**	**DRN100LS4**	295
2	736	49800	**FAF107**			315
2.3	640	49800	**F107**			310
			FF107			340
2.6	560	49800	**FA107**	**R77**	**DRN100L4**	300
3	489	49800	**FAF107**			325
3.3	436	49800	**F107**			320
			FF107			345
4	370	49800	**FA107**	**R77**	**DRN112M4**	310
4.4	333	49800	**FAF107**			330
			F107			325
			FF107			355
5	291	49800	**FA107**	**R77**	**DRN132S4**	320
5.7	255	49800	**FAF107**			345
			F107			340
			FF107			365
6.5	225	49800	**FA107**	**R77**	**DRN132M4**	340
7.7	190	49800	**FAF107**			360
			F107			355
			FF107			385

$M_{a\,max}$ = 7840 Nm

n_a min^{-1}	i	F_{Ra} N	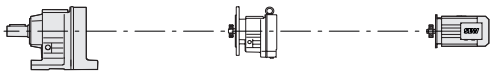			m kg
0.26	5383	49400	**FA107**	**R77**	**DRN71M4**	265
0.31	4593	49400	**FAF107**			290
0.35	4016	49400	**F107**			285
0.37	3815	49400	**FF107**			310
0.43	3347	49400	**FA107**	**R77**	**DRN80MK4**	270
0.51	2839	49400	**FAF107**			290
0.56	2563	49400	**F107**			285
			FF107			315
0.64	2255	49400	**FA107**	**R77**	**DRN80M4**	275
0.68	2129	49400	**FAF107**			295
0.79	1813	49400	**F107**			290
			FF107			315
0.91	1590	49400	**FA107**	**R77**	**DRN90S4**	280
1	1436	49400	**FAF107**			300
1.2	1193	49400	**F107**			295
1.2	1263	49400	**FF107**			320
1.4	1015	49400	**FA107**	**R77**	**DRN90L4**	280
1.6	923	49400	**FAF107**			300
			F107			300
			FF107			325
1.8	800	49400	**FA107**	**R77**	**DRN100LS4**	285
2.1	696	49400	**FAF107**			305
			F107			300
			FF107			330
2.3	644	49400	**FA107**	**R77**	**DRN100LS4**	285
2.5	591	49400	**FAF107**			305
			F107			300
			FF107			330
2.8	518	49400	**FA107**	**R77**	**DRN100L4**	290
3	491	49400	**FAF107**			315
3.4	430	49400	**F107**			310
			FF107			335
3.8	387	49400	**FA107**	**R77**	**DRN112M4**	300
4.3	340	49400	**FAF107**			320
			F107			315
			FF107			345
4.9	300	49400	**FA107**	**R77**	**DRN132S4**	310
5.5	266	49400	**FAF107**			335
			F107			330
			FF107			355

$M_{a\,max}$ = 12000 Nm

n_a min^{-1}	i	F_{Ra} N	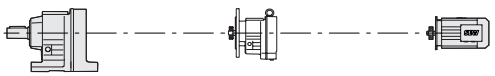			m kg
0.06	22323	90000	**FA127**	**R77**	**DRN63MS4**	425
0.06	24478	90000	**FAF127**			465
			F127			460
			FF127			510
0.07	19048	90000	**FA127**	**R77**	**DRN63M4**	425
0.08	16656	90000	**FAF127**			465
0.09	14722	90000	**F127**			465
0.11	12912	90000	**FF127**			510

$M_{a\,max}$ = 12000 Nm

n_a min^{-1}	i	F_{Ra} N	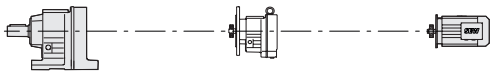			m kg
0.12	11656	90000	**FA127**	**R77**	**DRN71MS4**	425
0.14	10191	90000	**FAF127**			465
0.16	8831	90000	**F127**			465
			FF127			510
0.19	7643	90000	**FA127**	**R77**	**DRN71M4**	430
0.21	6715	90000	**FAF127**			465
0.24	5925	90000	**F127**			465
			FF127			510
0.28	5153	90000	**FA127**	**R77**	**DRN80MK4**	430
0.32	4533	90000	**FAF127**			470
0.37	3926	90000	**F127**			465
			FF127			510
0.42	3454	90000	**FA127**	**R77**	**DRN80M4**	435
0.48	3031	90000	**FAF127**			470
			F127			470
			FF127			520
0.54	2672	90000	**FA127**	**R77**	**DRN80M4**	435
			FAF127			470
			F127			470
			FF127			510
0.62	2357	90000	**FA127**	**R77**	**DRN90S4**	440
0.71	2038	90000	**FAF127**			475
			F127			475
			FF127			520
0.82	1784	90000	**FA127**	**R77**	**DRN90L4**	440
0.91	1606	90000	**FAF127**			480
1.1	1390	90000	**F127**			480
			FF127			520
1.2	1220	90000	**FA127**	**R77**	**DRN100LS4**	445
1.4	1077	90000	**FAF127**			485
1.6	930	90000	**F127**			480
			FF127			530
1.8	820	90000	**FA127**	**R77**	**DRN100L4**	455
2	727	90000	**FAF127**			490
			F127			490
			FF127			530
2.3	648	90000	**FA127**	**R77**	**DRN112M4**	460
2.7	549	90000	**FAF127**			500
3	495	90000	**F127**			500
			FF127			540
3	483	90000	**FA127**	**R87**	**DRN132S4**	495
3.4	428	90000	**FAF127**			530
3.5	418	90000	**F127**			530
3.9	374	90000	**FF127**			570
3.9	376	90000				
4.7	312	90000	**FA127**	**R87**	**DRN132M4**	510
5	293	90000	**FAF127**			550
			F127			550
			FF127			590
5.7	259	90000	**FA127**	**R87**	**DRN132L4**	520
6.6	223	90000	**FAF127**			560
			F127			560
			FF127			600

$M_{a\,max}$ = 12000 Nm

n_a min^{-1}	i	F_{Ra} N	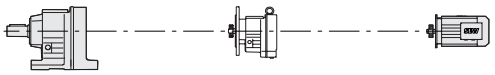			m kg
7.5	198	90000	**FA127** **FAF127** **F127** **FF127**	**R87**	**DRN160M4**	550 590 590 630
8.9	166	90000	**FA127** **FAF127** **F127** **FF127**	**R87**	**DRN160L4**	570 610 600 650

$M_{a\,max}$ = 20000 Nm

n_a min^{-1}	i	F_{Ra} N	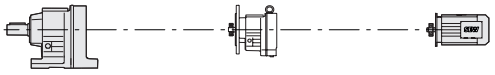			m kg
0.05 **0.06** **0.06** **0.07** **0.08** **0.09**	31434 26173 23464 20212 17984 16358	93800 93800 93800 93800 93800 93800	**FA157** **FAF157** **F157** **FF157**	**R97**	**DRN71MS4**	770 820 790 890
0.1 **0.12**	13751 12235	93800 93800	**FA157** **FAF157** **F157** **FF157**	**R97**	**DRN71M4**	770 830 790 890
0.2	7075	93800	**FA157** **FAF157** **F157** **FF157**	**R97**	**DRN80MK4**	770 830 790 900
0.14 **0.16** **0.18** **0.23** **0.27**	10033 9021 8026 6295 5404	93800 93800 93800 93800 93800	**FA157** **FAF157** **F157** **FF157**	**R97**	**DRN80M4**	770 830 790 900
0.3 **0.35**	4831 4130	93800 93800	**FA157** **FAF157** **F157** **FF157**	**R97**	**DRN90S4**	780 840 800 900
0.53	2780	93800	**FA157** **FAF157** **F157** **FF157**	**R97**	**DRN90L4**	780 840 800 910
0.6	2427	93800	**FA157** **FAF157** **F157** **FF157**	**R97**	**DRN90L4**	780 840 800 900
0.4 **0.45**	3607 3210	93800 93800	**FA157** **FAF157** **F157** **FF157**	**R97**	**DRN100LS4**	780 840 810 910
0.66 **0.75** **0.87**	2185 1944 1674	93800 93800 93800	**FA157** **FAF157** **F157** **FF157**	**R97**	**DRN100LS4**	780 840 800 910
1	1441	93800	**FA157** **FAF157** **F157** **FF157**	**R97**	**DRN100L4**	790 850 810 920

$M_{a\,max}$ = 20000 Nm

n_a min^{-1}	i	F_{Ra} N	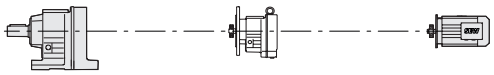			m kg
			FA157			790
1.1	1308	93800	**FAF157**	**R97**	**DRN100L4**	850
1.3	1169	93800	**F157**			810
			FF157			920
			FA157			800
1.5	953	93800	**FAF157**	**R97**	**DRN112M4**	860
1.7	845	93800	**F157**			820
			FF157			920
			FA157			810
1.9	764	93800	**FAF157**	**R97**	**DRN132S4**	870
2.2	680	93800	**F157**			830
			FF157			940
			FA157			830
2.6	576	93800	**FAF157**	**R97**	**DRN132M4**	890
2.9	503	93800	**F157**			850
3.3	446	93800	**FF157**			950
			FA157			870
4.2	353	93800	**FAF157**	**R97**	**DRN160M4**	930
4.9	302	93800	**F157**			890
			FF157			1000
			FA157			880
5.4	273	93800	**FAF157**	**R97**	**DRN160L4**	940
6.4	232	93800	**F157**			900
			FF157			1010
			FA157			910
7.3	202	93800	**FAF157**	**R97**	**DRN180M4**	960
7.5	197	93800	**F157**			930
			FF157			1030

4.3.4 Dimension sheets F..DRN..

42 020 02 14

F27..

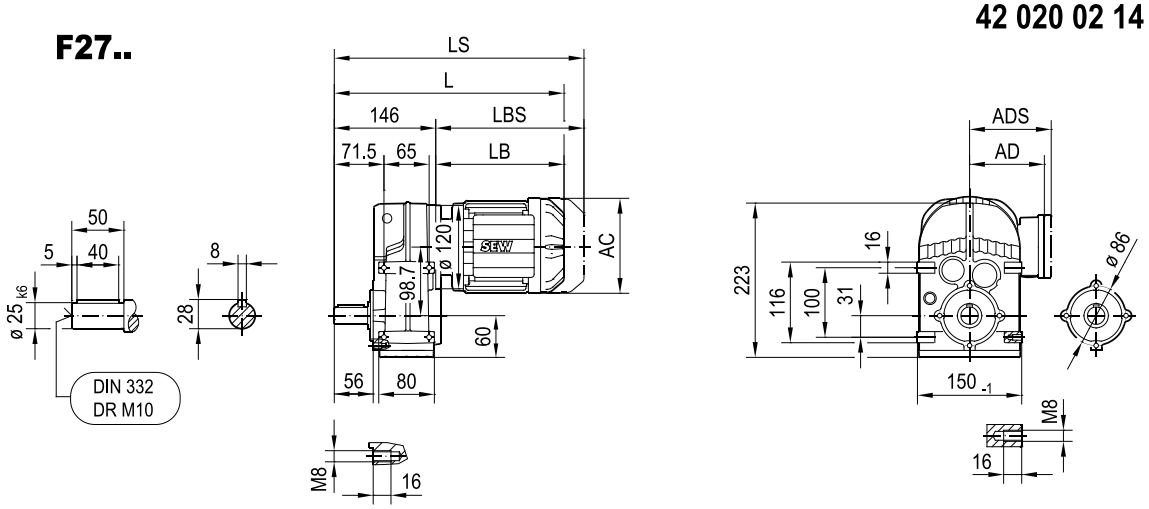

FA27B..

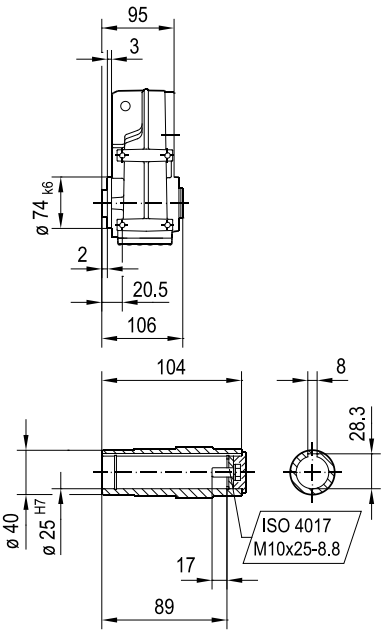

FH27B..
max. DR71..

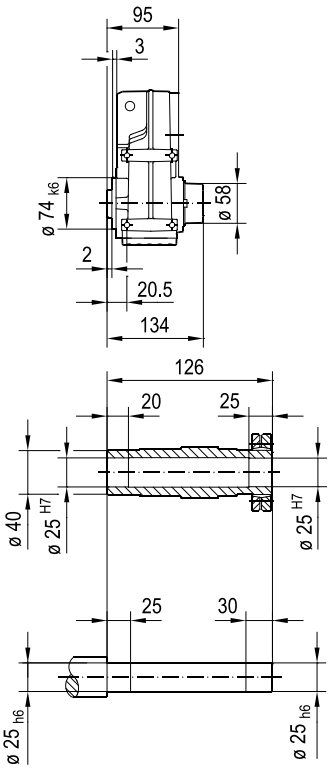

FV27B..

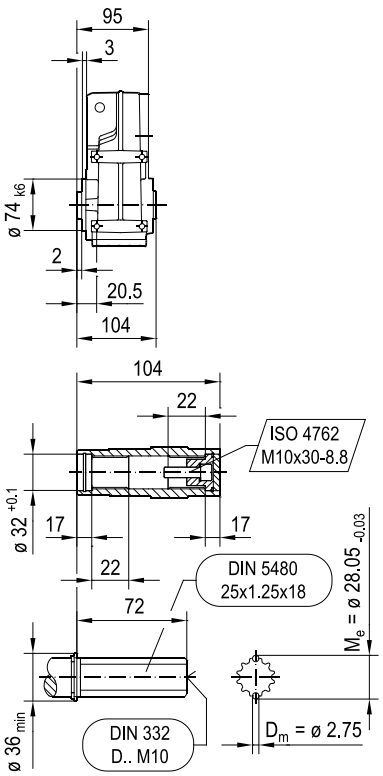

(→ 📖 4.1)	DRN										
	63MS	63M	71MS	71M	80MK	80MS	80M	90S	90L	100LS	100L/LM
AC	115	115	139	139	156	156	156	179	179	197	197
AD	98	98	118	118	128	128	128	140	140	157	157
ADS	98	98	129	129	139	139	139	150	150	158	158
L	336	350	352	372	383	400	429	430	462	460	510
LS	392	406	419	439	464	481	510	524	556	554	604
LB	190	204	206	226	237	254	283	284	316	314	364
LBS	246	260	273	293	318	335	364	378	410	408	458

42 021 01 14

FF27..

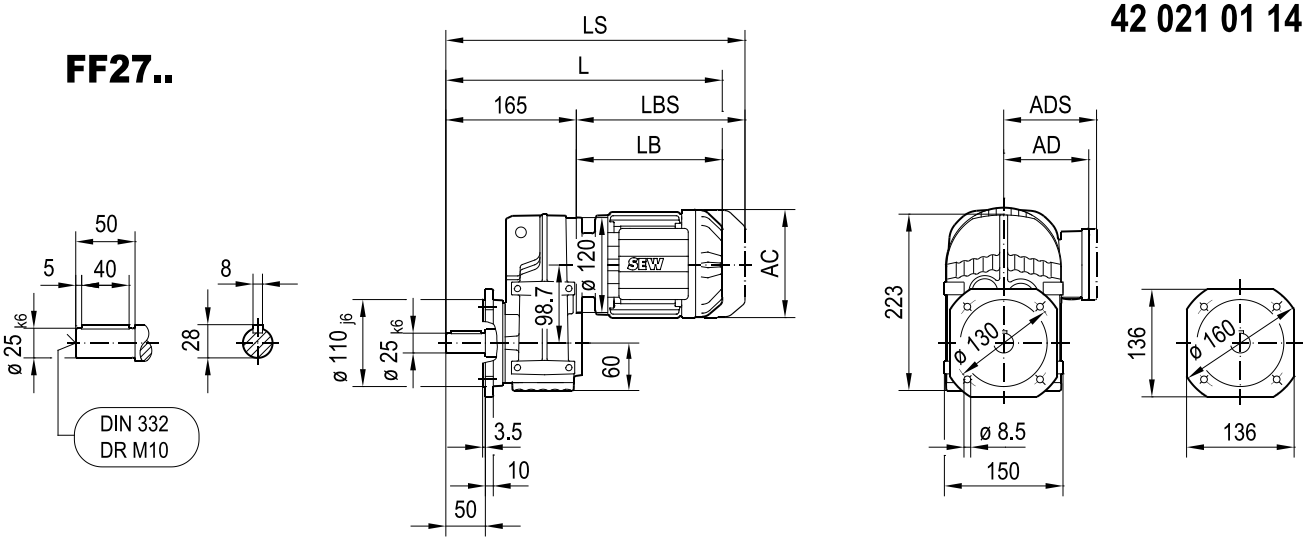

FAF27..

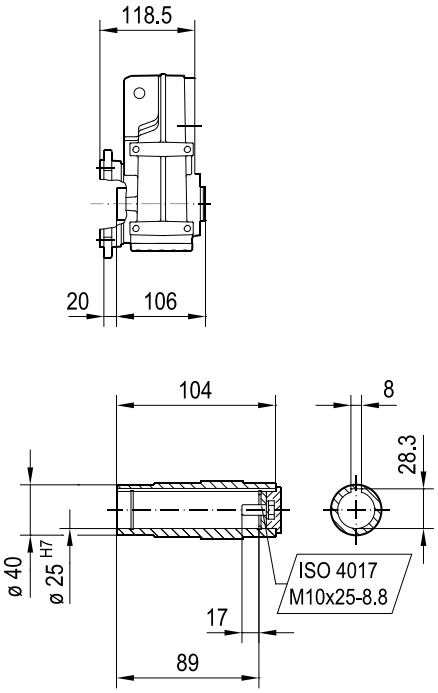

FHF27..
max. DR71..

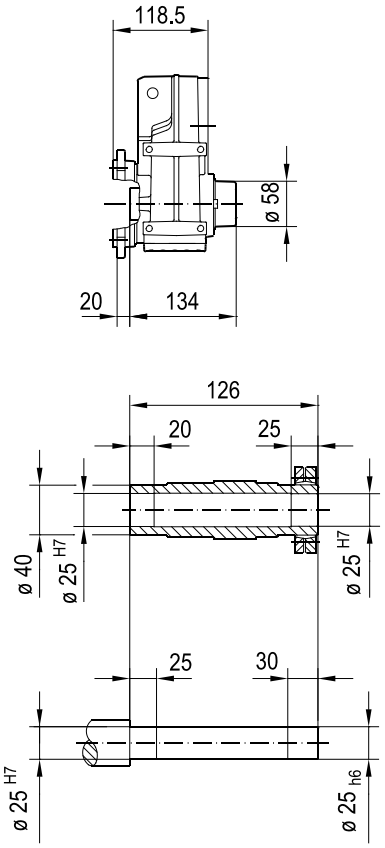

FVF27..

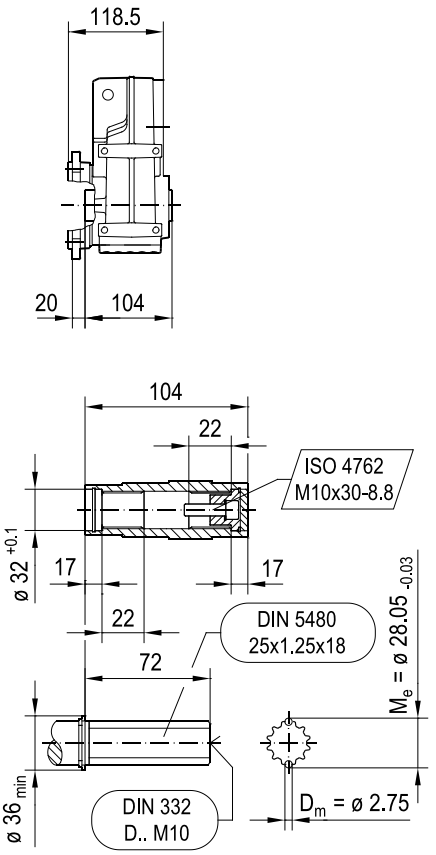

(→ 📖 4.1)	DRN										
	63MS	63M	71MS	71M	80MK	80MS	80M	90S	90L	100LS	100L/LM
AC	115	115	139	139	156	156	156	179	179	197	197
AD	98	98	118	118	128	128	128	140	140	157	157
ADS	98	98	129	129	139	139	139	150	150	158	158
L	355	369	371	391	402	419	448	449	481	479	529
LS	411	425	438	458	483	500	529	543	575	573	623
LB	190	204	206	226	237	254	283	284	316	314	364
LBS	246	260	273	293	318	335	364	378	410	408	458

FA27..

42 022 01 14

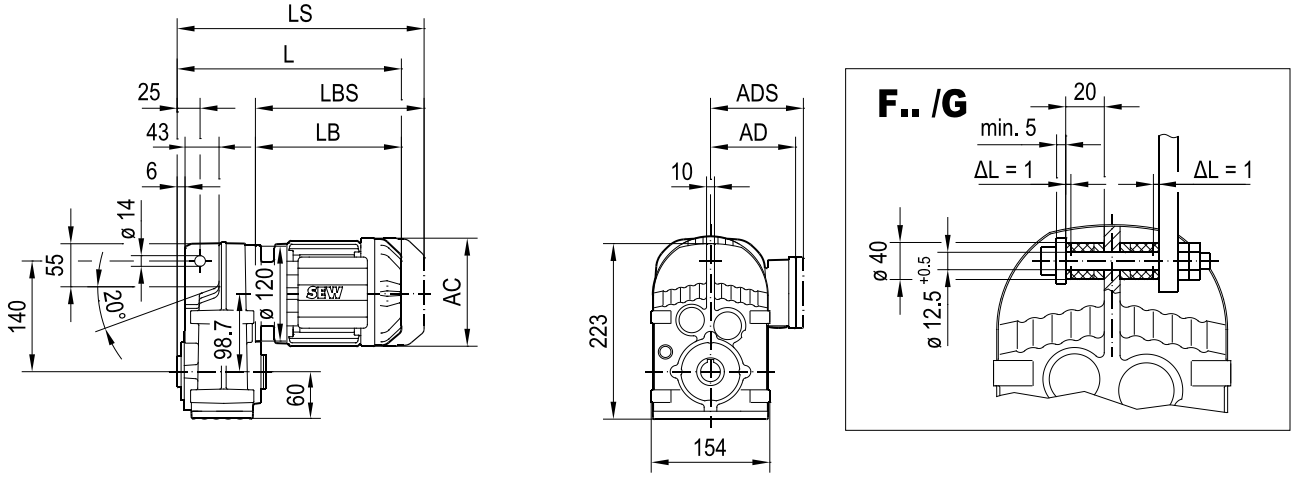

FA27..

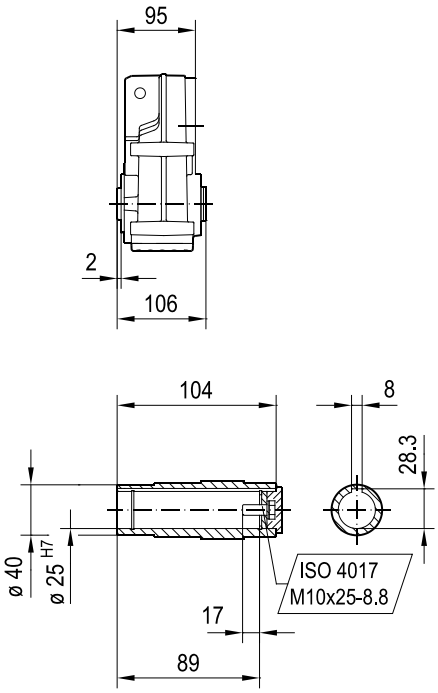

FH27..

max. DR71..

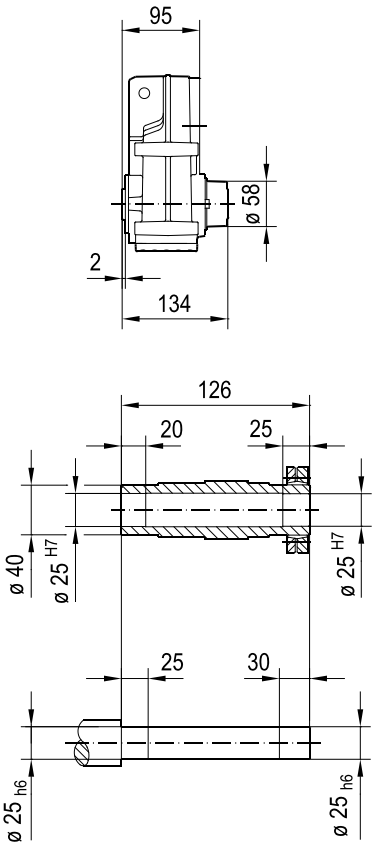

FV27..

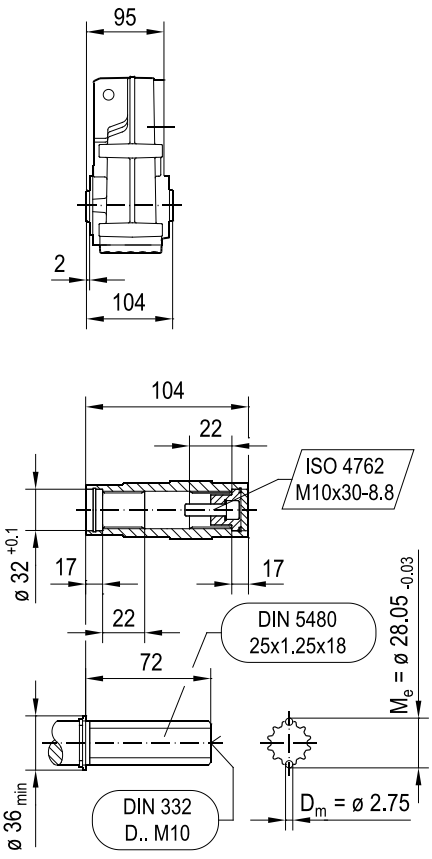

(→ 📖 4.1)	DRN										
	63MS	63M	71MS	71M	80MK	80MS	80M	90S	90L	100LS	100L/LM
AC	115	115	139	139	156	156	156	179	179	197	197
AD	98	98	118	118	128	128	128	140	140	157	157
ADS	98	98	129	129	139	139	139	150	150	158	158
L	285	299	301	321	332	349	378	379	411	409	459
LS	341	355	368	388	413	430	459	473	505	503	553
LB	190	204	206	226	237	254	283	284	316	314	364
LBS	246	260	273	293	318	335	364	378	410	408	458

FAZ27..

42 023 01 14

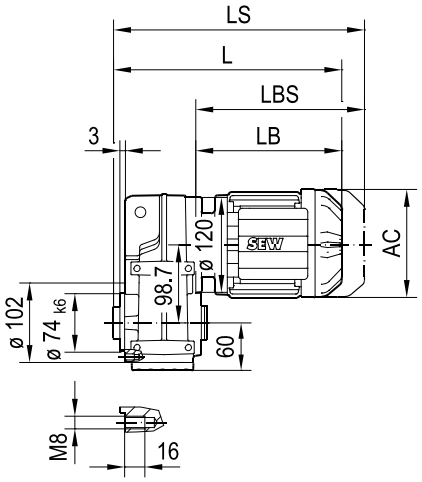

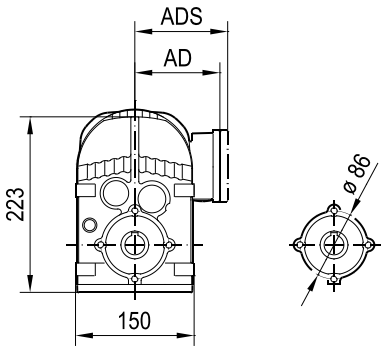

FAZ27..

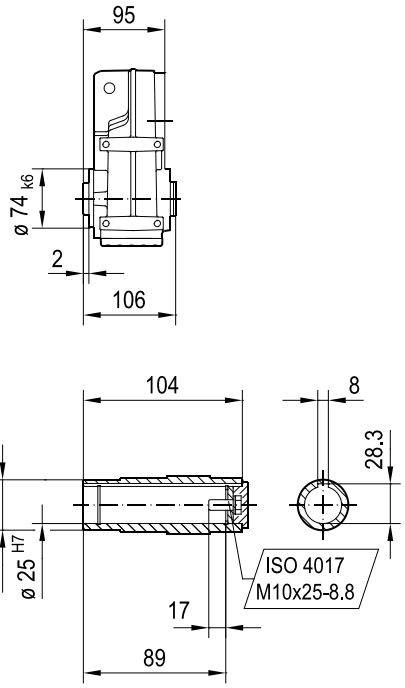

FHZ27..
max. DR71..

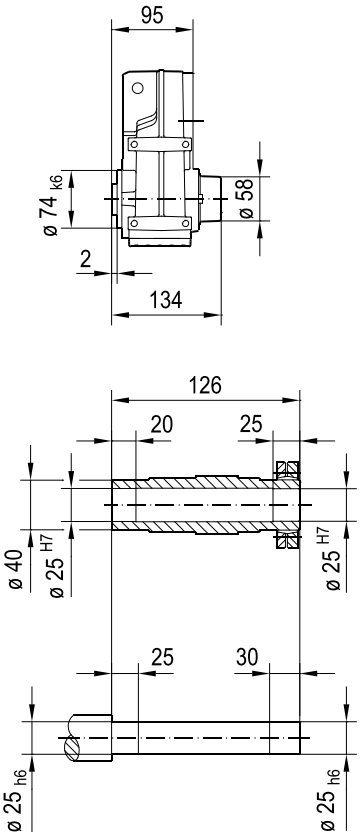

FVZ27..

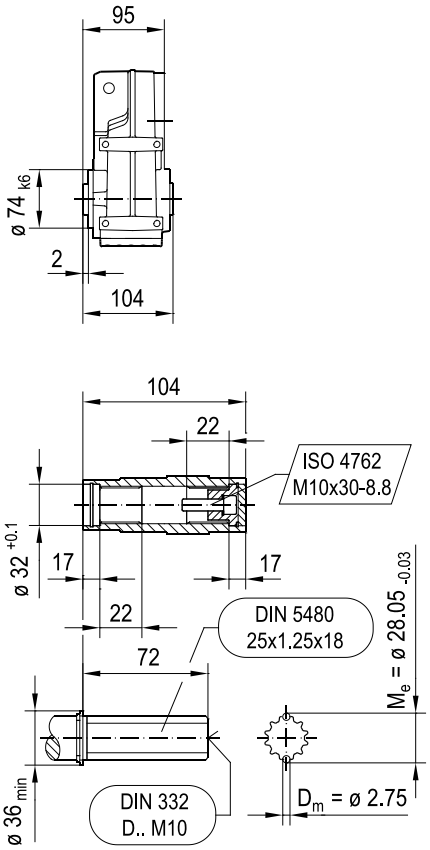

(→ 📖 4.1)	DRN										
	63MS	63M	71MS	71M	80MK	80MS	80M	90S	90L	100LS	100L/LM
AC	115	115	139	139	156	156	156	179	179	197	197
AD	98	98	118	118	128	128	128	140	140	157	157
ADS	98	98	129	129	139	139	139	150	150	158	158
L	285	299	301	321	332	349	378	379	411	409	459
LS	341	355	368	388	413	430	459	473	505	503	553
LB	190	204	206	226	237	254	283	284	316	314	364
LBS	246	260	273	293	318	335	364	378	410	408	458

42 071 02 15

FZ27..

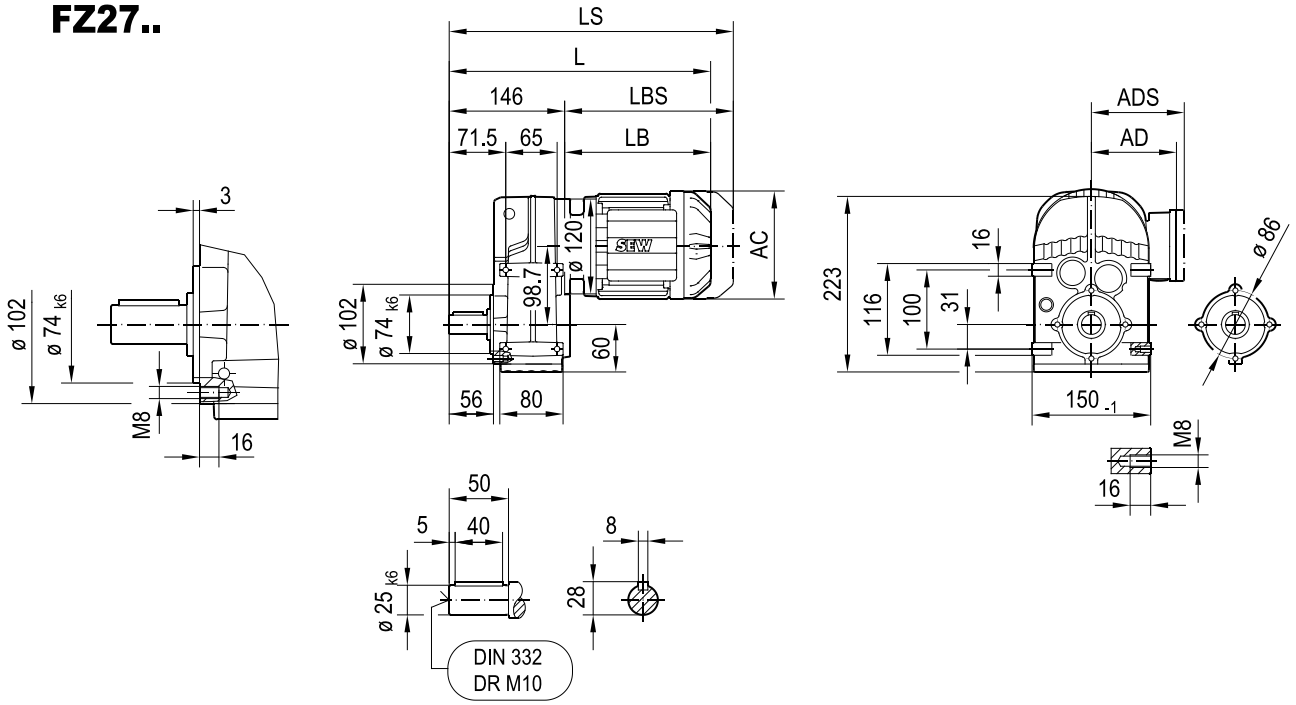

(→ 📖 4.1)	DRN										
	63MS	63M	71MS	71M	80MK	80MS	80M	90S	90L	100LS	100L/LM
AC	115	115	139	139	156	156	156	179	179	197	197
AD	98	98	118	118	128	128	128	140	140	157	157
ADS	98	98	129	129	139	139	139	150	150	158	158
L	336	350	352	372	383	400	429	430	462	460	510
LS	392	406	419	439	464	481	510	524	556	554	604
LB	190	204	206	226	237	254	283	284	316	314	364
LBS	246	260	273	293	318	335	364	378	410	408	458

F37..

42 024 02 14

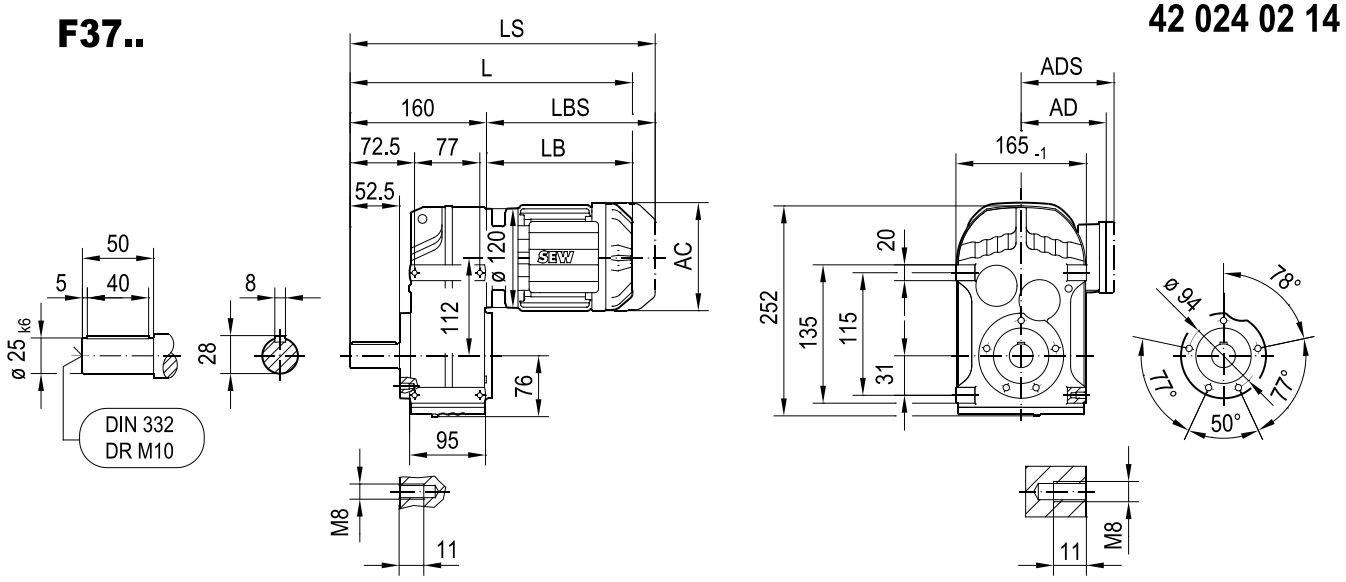

FA37B..

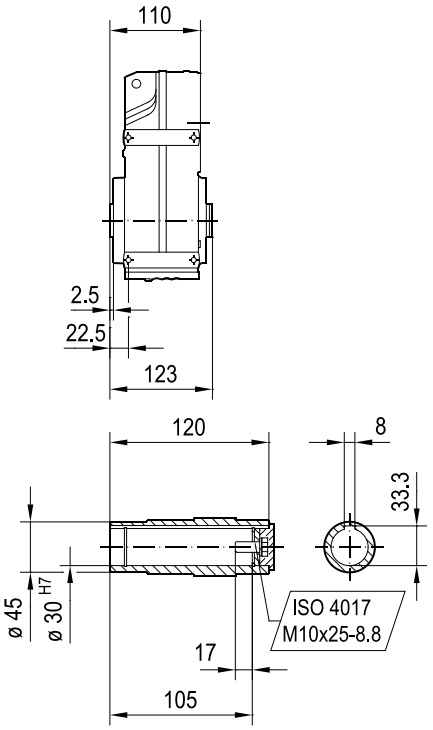

FH37B..
max. DRN80M

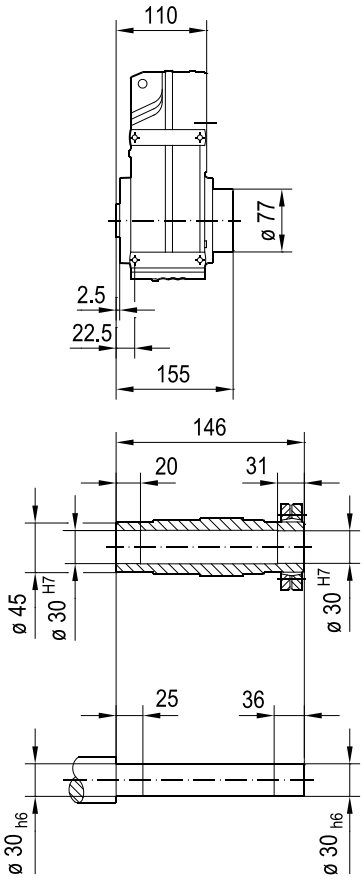

FV37B..

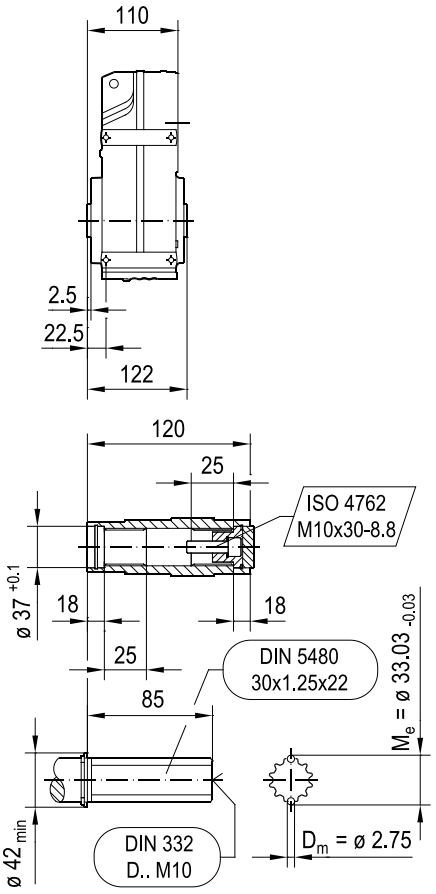

(→ 📖 4.1)	DRN										
	63MS	63M	71MS	71M	80MK	80MS	80M	90S	90L	100LS	100L/LM
AC	115	115	139	139	156	156	156	179	179	197	197
AD	98	98	118	118	128	128	128	140	140	157	157
ADS	98	98	129	129	139	139	139	150	150	158	158
L	350	364	366	386	397	414	443	444	476	474	524
LS	406	420	433	453	478	495	524	538	570	568	618
LB	190	204	206	226	237	254	283	284	316	314	364
LBS	246	260	273	293	318	335	364	378	410	408	458

FF37..

42 025 01 14

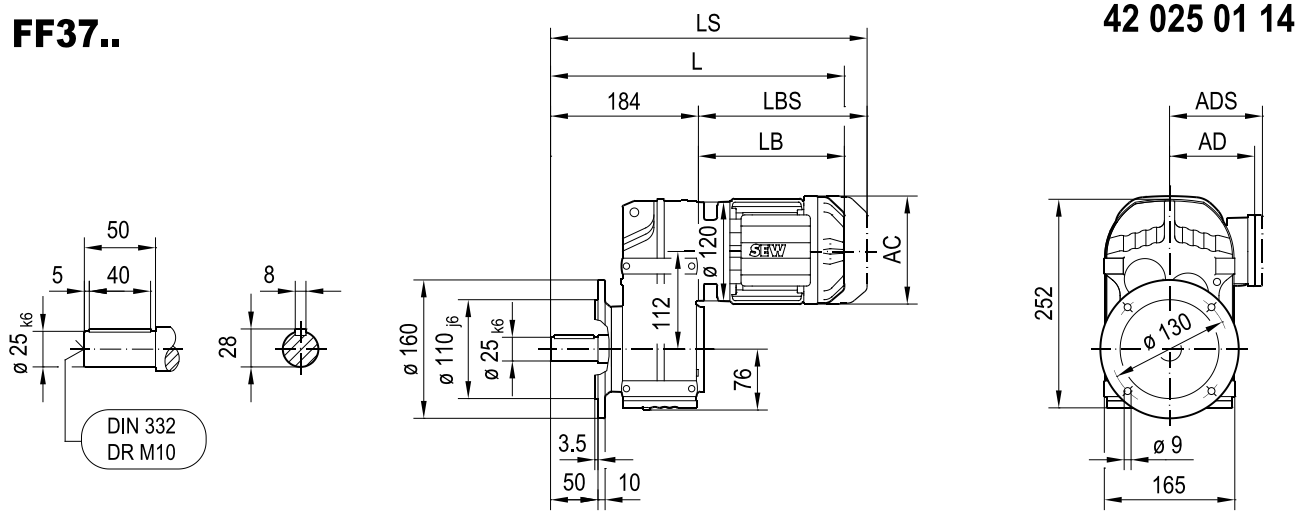

FAF37..

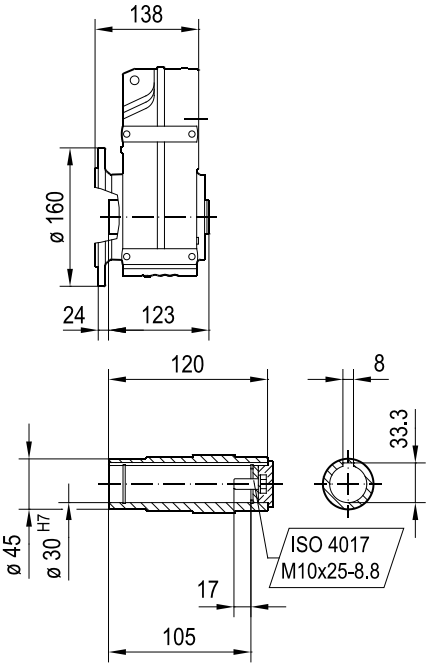

FHF37..
max. DRN80M

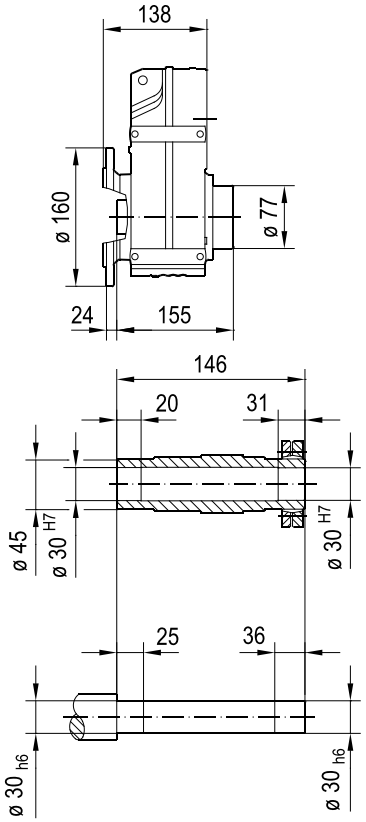

FVF37..

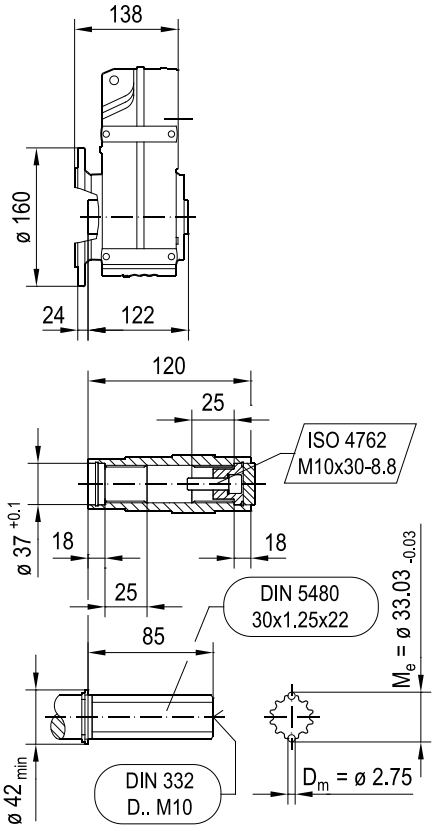

(→ 📖 4.1)	DRN										
	63MS	63M	71MS	71M	80MK	80MS	80M	90S	90L	100LS	100L/LM
AC	115	115	139	139	156	156	156	179	179	197	197
AD	98	98	118	118	128	128	128	140	140	157	157
ADS	98	98	129	129	139	139	139	150	150	158	158
L	374	388	390	410	421	438	467	468	500	498	548
LS	430	444	457	477	502	519	548	562	594	592	642
LB	190	204	206	226	237	254	283	284	316	314	364
LBS	246	260	273	293	318	335	364	378	410	408	458

FA37..

42 026 01 14

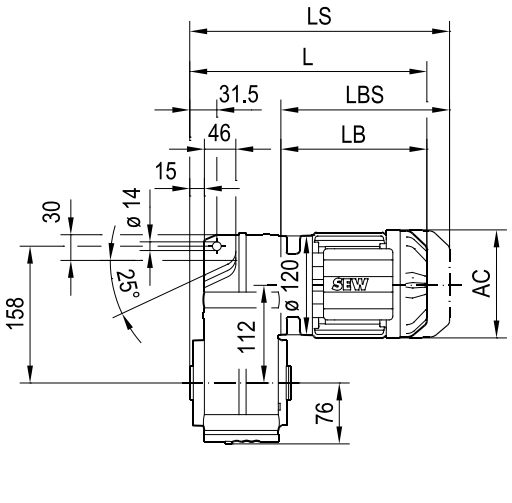

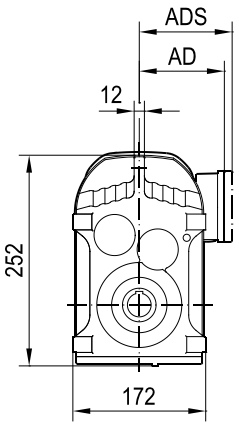

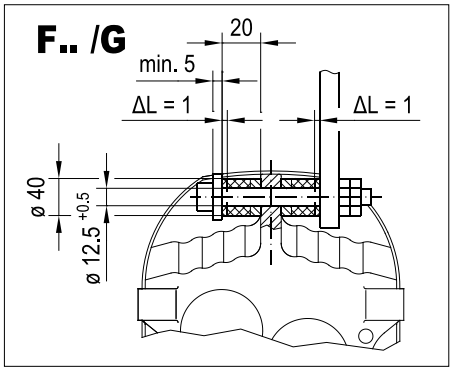

FA37..

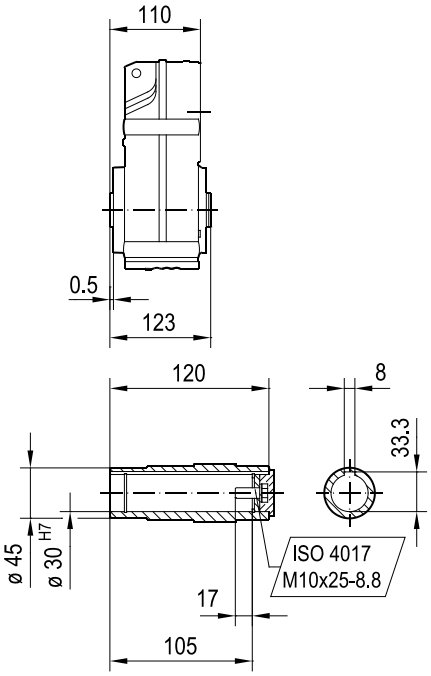

FH37..
max. DRN80M

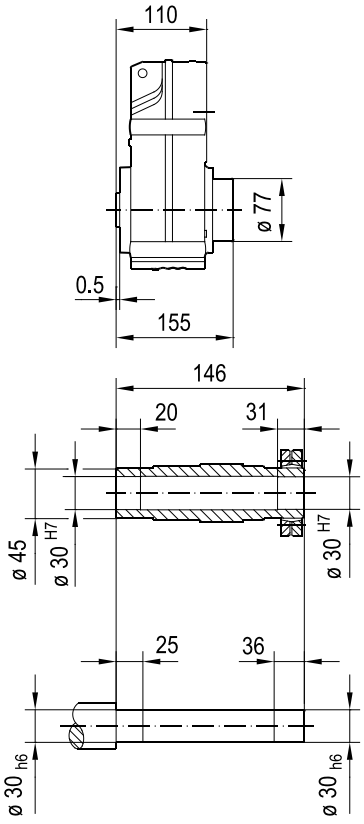

FV37..

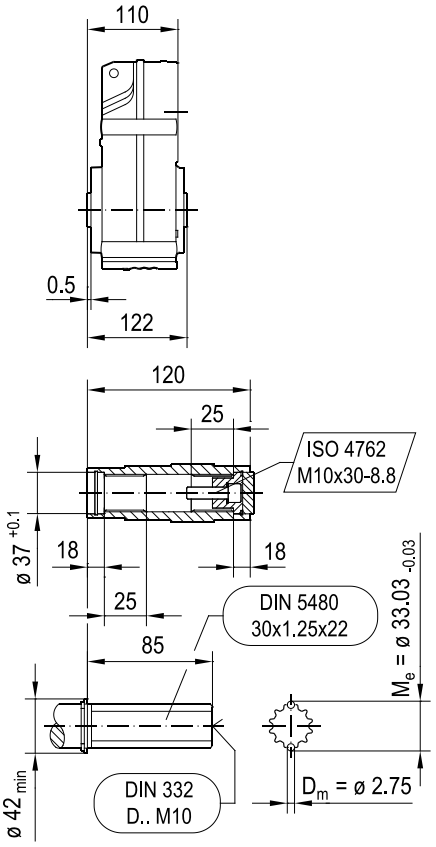

(→ 📖 4.1)	DRN										
	63MS	63M	71MS	71M	80MK	80MS	80M	90S	90L	100LS	100L/LM
AC	115	115	139	139	156	156	156	179	179	197	197
AD	98	98	118	118	128	128	128	140	140	157	157
ADS	98	98	129	129	139	139	139	150	150	158	158
L	300	314	316	336	347	364	393	394	426	424	474
LS	356	370	383	403	428	445	474	488	520	518	568
LB	190	204	206	226	237	254	283	284	316	314	364
LBS	246	260	273	293	318	335	364	378	410	408	458

FAZ37..

42 027 01 14

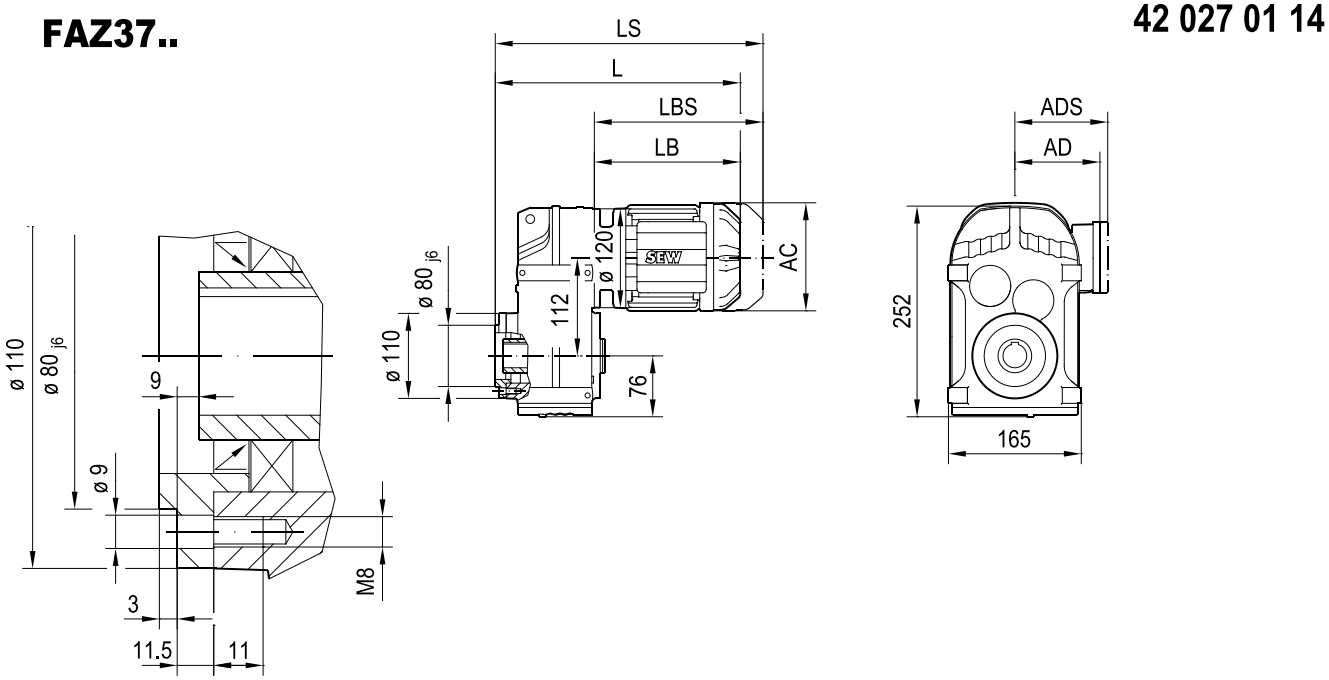

FAZ37..

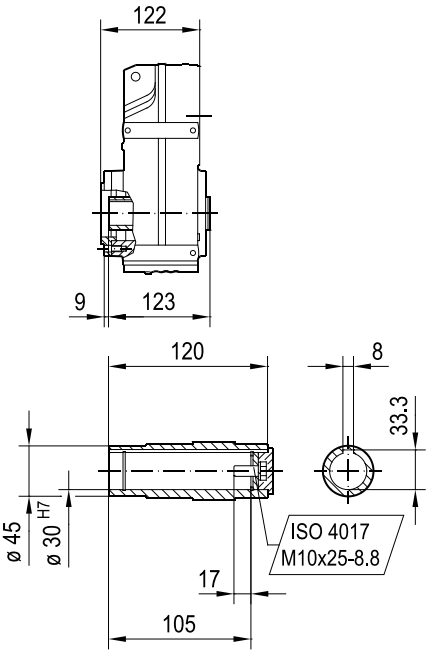

FHZ37..
max. DRN80M

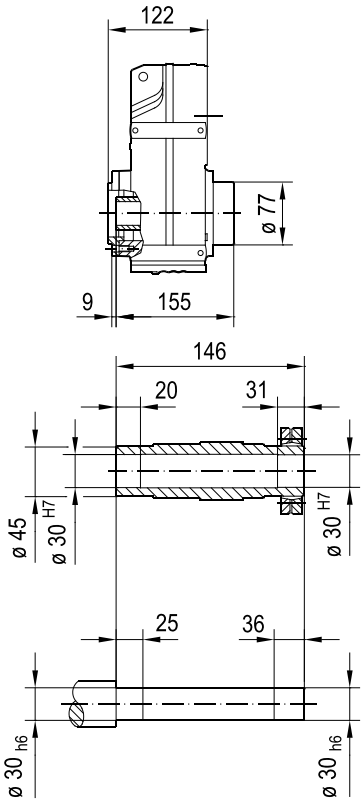

FVZ37..

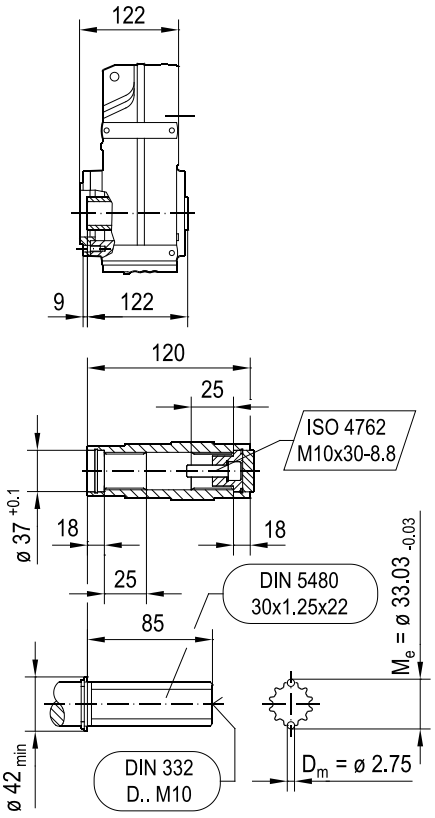

(→ 📖 4.1)	DRN										
	63MS	63M	71MS	71M	80MK	80MS	80M	90S	90L	100LS	100L/LM
AC	115	115	139	139	156	156	156	179	179	197	197
AD	98	98	118	118	128	128	128	140	140	157	157
ADS	98	98	129	129	139	139	139	150	150	158	158
L	312	326	328	348	359	376	405	406	438	436	486
LS	368	382	395	415	440	457	486	500	532	530	580
LB	190	204	206	226	237	254	283	284	316	314	364
LBS	246	260	273	293	318	335	364	378	410	408	458

FZ37..

42 072 02 15

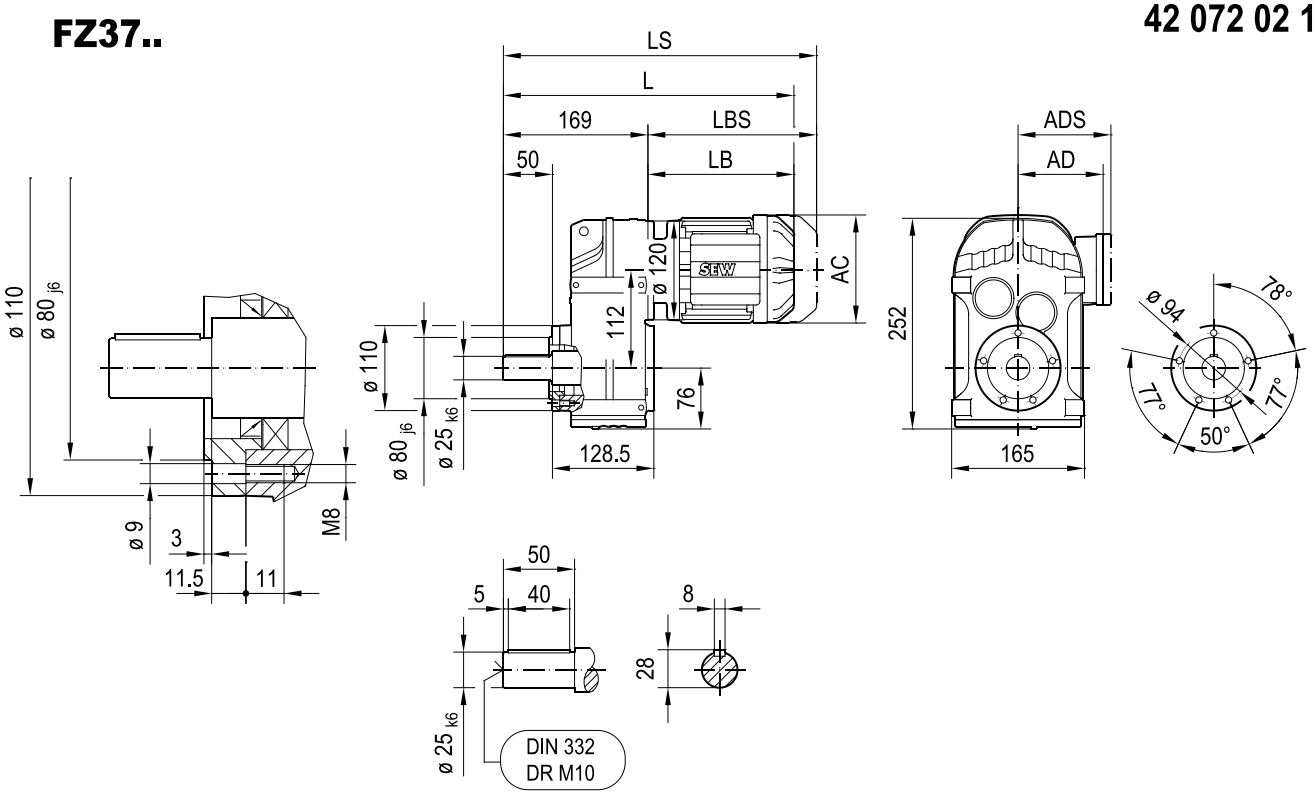

(→ 📖 4.1)	DRN										
	63MS	63M	71MS	71M	80MK	80MS	80M	90S	90L	100LS	100L/LM
AC	115	115	139	139	156	156	156	179	179	197	197
AD	98	98	118	118	128	128	128	140	140	157	157
ADS	98	98	129	129	139	139	139	150	150	158	158
L	359	373	375	395	406	423	452	453	485	483	533
LS	415	429	442	462	487	504	533	547	579	577	627
LB	190	204	206	226	237	254	283	284	316	314	364
LBS	246	260	273	293	318	335	364	378	410	408	458

FT37..

42 028 02 14

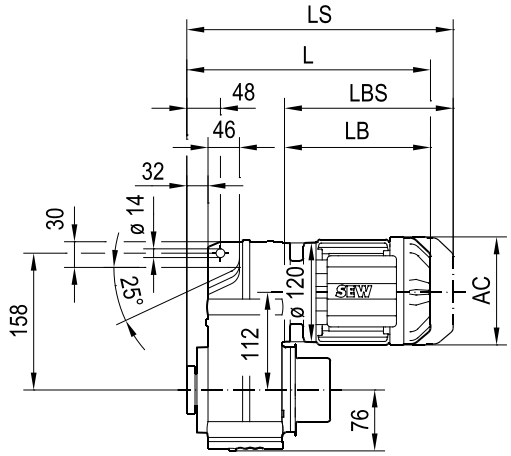

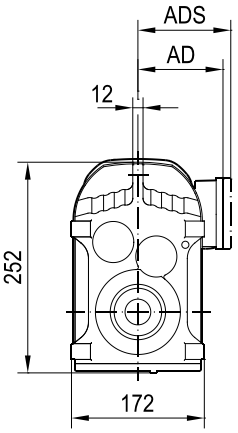

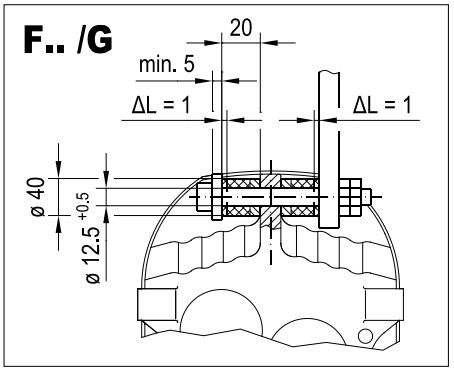

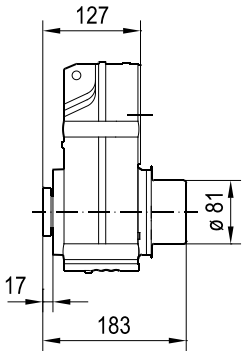

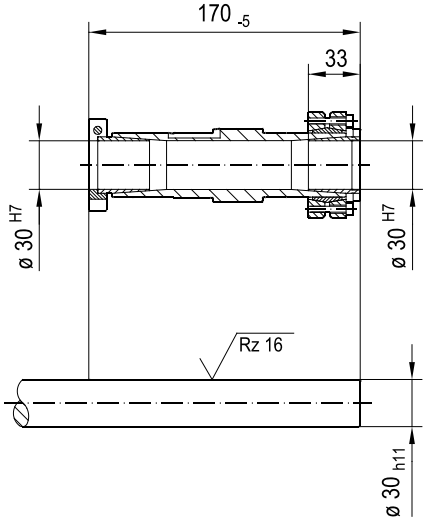

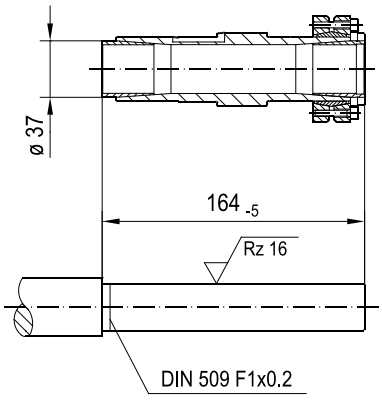

(→ 📖 4.1)	DRN							
	63MS	63M	71MS	71M	80MS			
AC	115	115	139	139	156			
AD	98	98	118	118	128			
ADS	98	98	129	129	139			
L	317	331	333	353	381			
LS	373	387	400	420	462			
LB	190	204	206	226	254			
LBS	246	260	273	293	335			

F47..

42 029 03 14

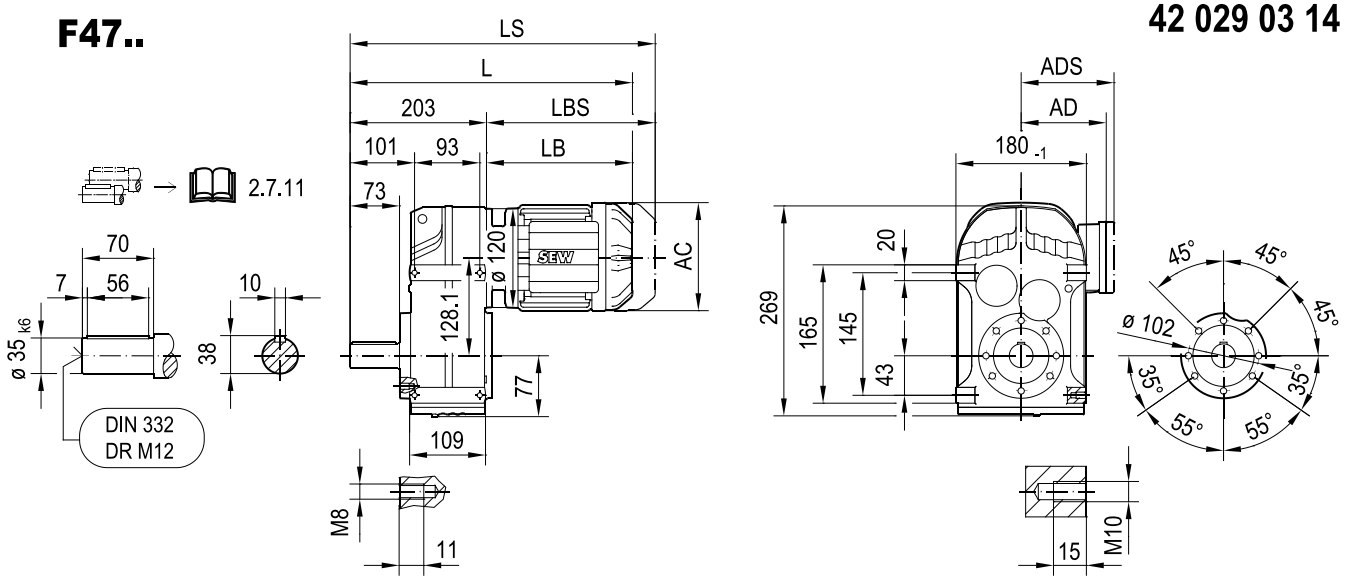

FA47B..

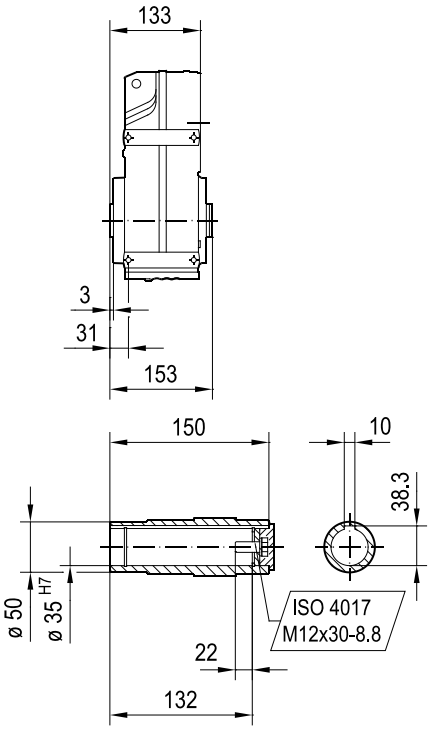

FH47B..

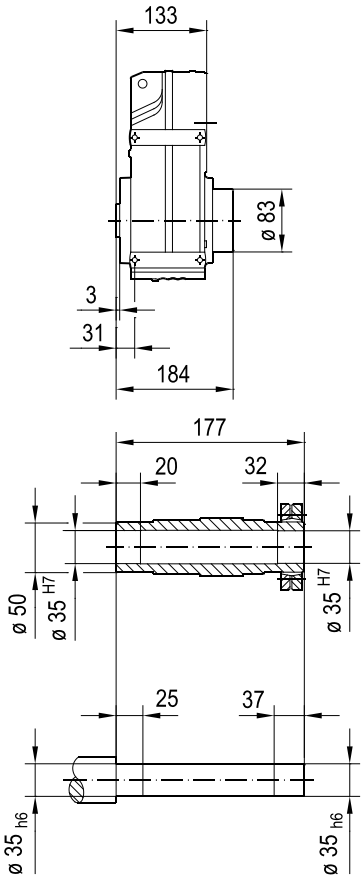

FV47B..

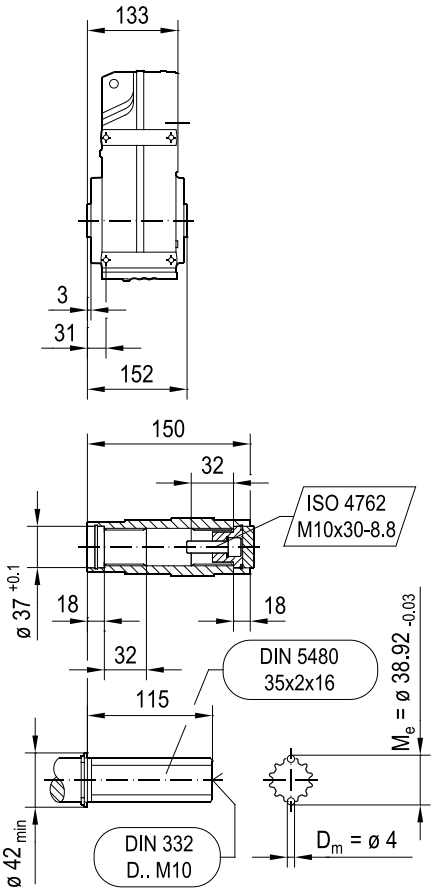

(→ 📖 4.1)	DRN										
	63MS	63M	71MS	71M	80MK	80MS	80M	90S	90L	100LS	100L/LM
AC	115	115	139	139	156	156	156	179	179	197	197
AD	98	98	118	118	128	128	128	140	140	157	157
ADS	98	98	129	129	139	139	139	150	150	158	158
L	383	397	399	419	430	447	476	477	509	507	557
LS	439	453	466	486	511	528	557	571	603	601	651
LB	190	204	206	226	237	254	283	284	316	314	364
LBS	246	260	273	293	318	335	364	378	410	408	458

FF47..

42 030 03 14

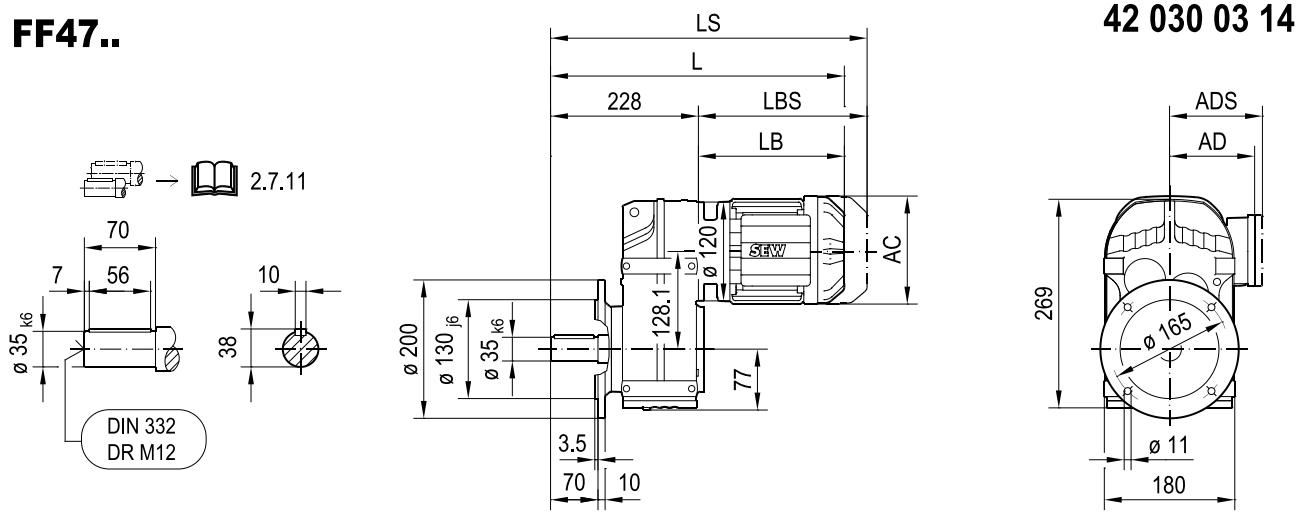

FAF47..

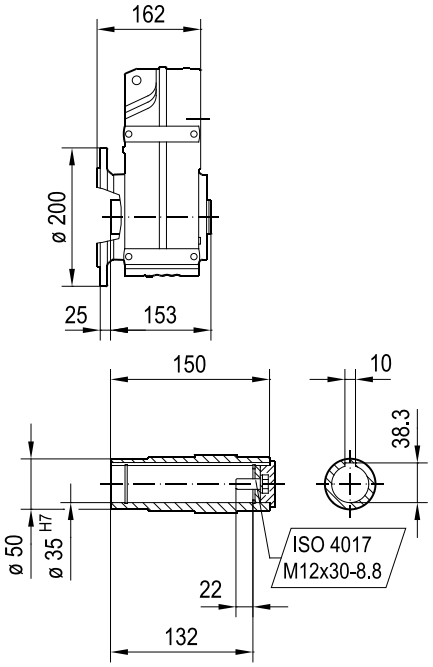

FHF47..

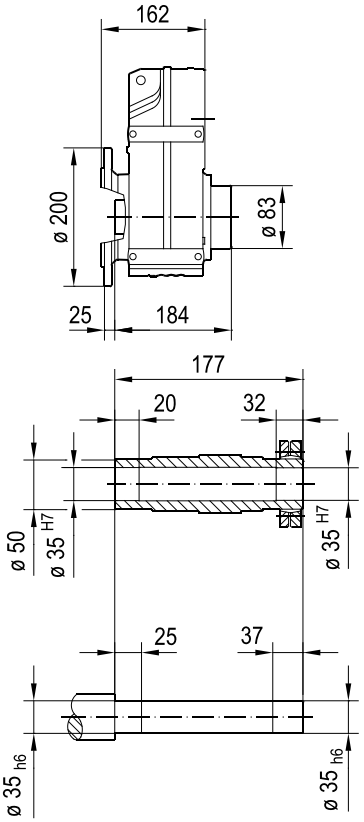

FVF47..

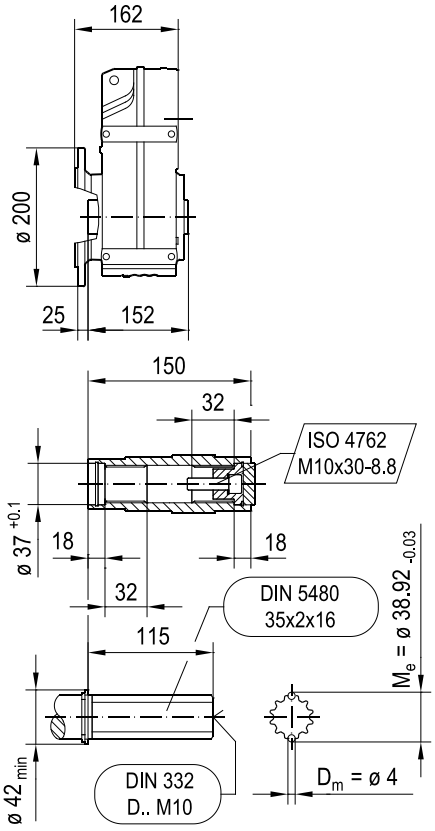

(→ 4.1)	DRN										
	63MS	63M	71MS	71M	80MK	80MS	80M	90S	90L	100LS	100L/LM
AC	115	115	139	139	156	156	156	179	179	197	197
AD	98	98	118	118	128	128	128	140	140	157	157
ADS	98	98	129	129	139	139	139	150	150	158	158
L	408	422	424	444	455	472	501	502	534	532	582
LS	464	478	491	511	536	553	582	596	628	626	676
LB	190	204	206	226	237	254	283	284	316	314	364
LBS	246	260	273	293	318	335	364	378	410	408	458

FA47..

42 031 00 14

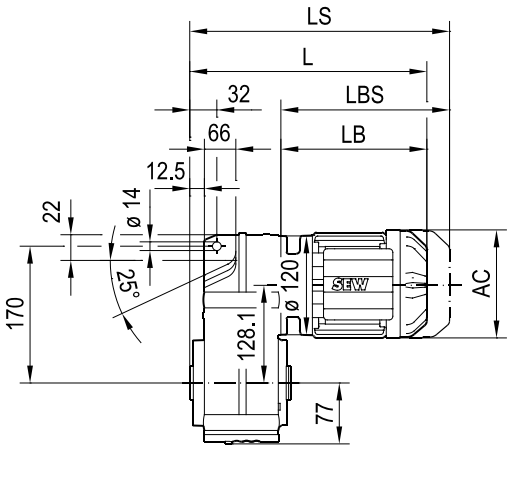

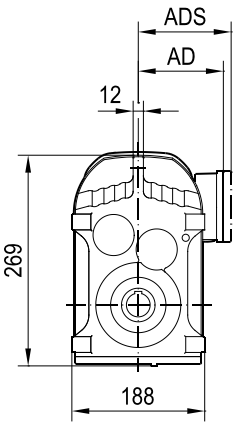

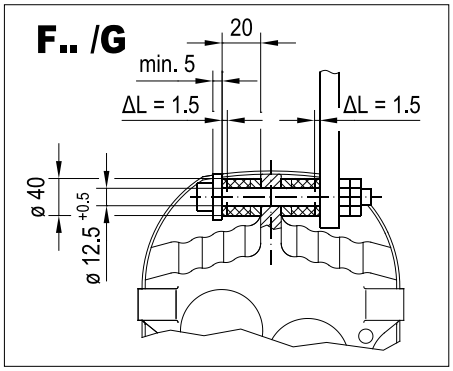

FA47..

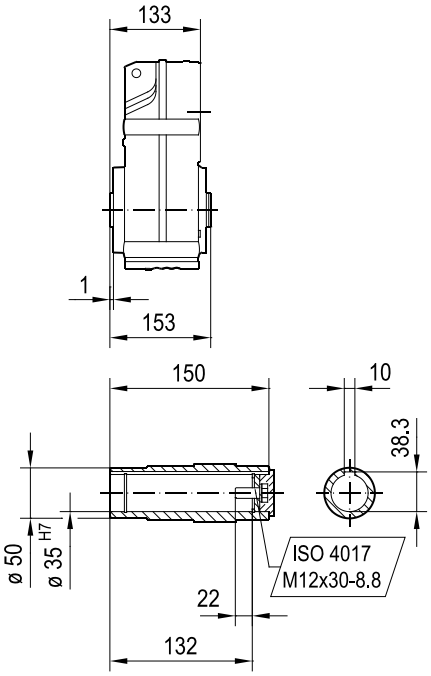

FH47..

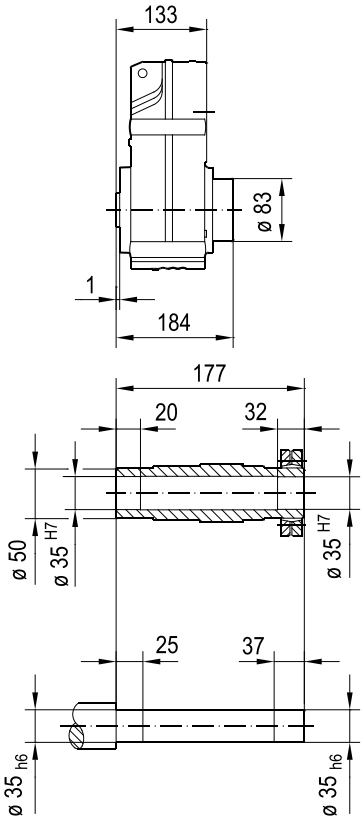

FV47..

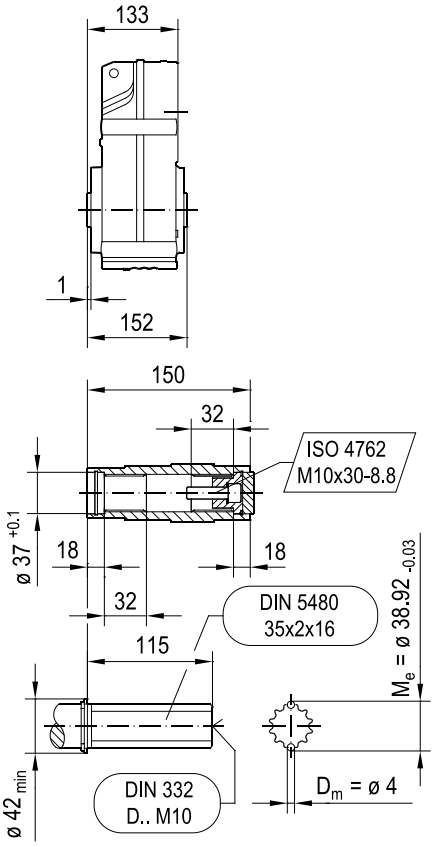

(→ 📖 4.1)	DRN										
	63MS	63M	71MS	71M	80MK	80MS	80M	90S	90L	100LS	100L/LM
AC	115	115	139	139	156	156	156	179	179	197	197
AD	98	98	118	118	128	128	128	140	140	157	157
ADS	98	98	129	129	139	139	139	150	150	158	158
L	323	337	339	359	370	387	416	417	449	447	497
LS	379	393	406	426	451	468	497	511	543	541	591
LB	190	204	206	226	237	254	283	284	316	314	364
LBS	246	260	273	293	318	335	364	378	410	408	458

FAZ47..

42 032 00 14

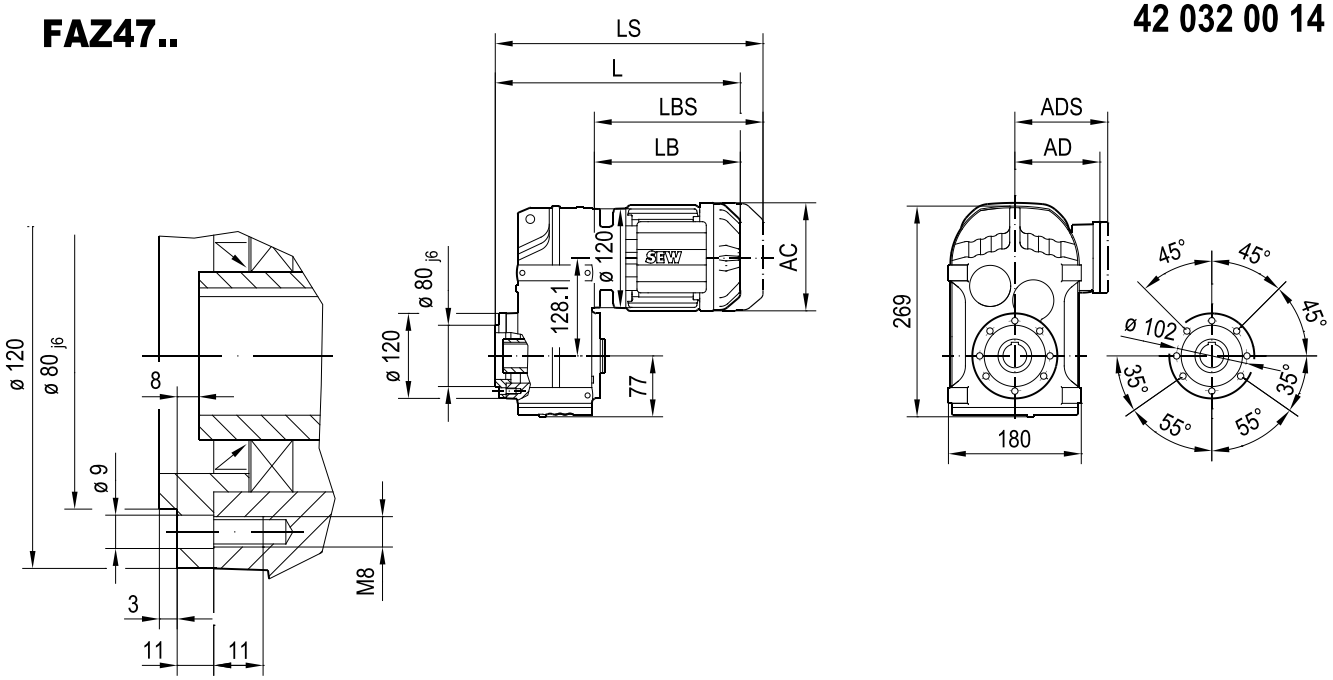

FAZ47..

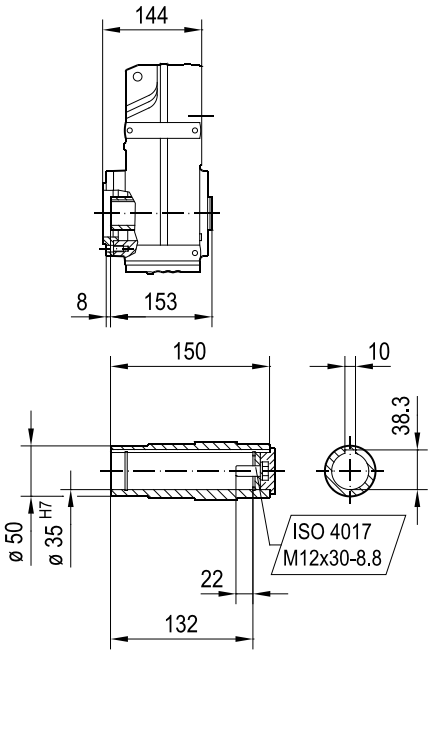

FHZ47..

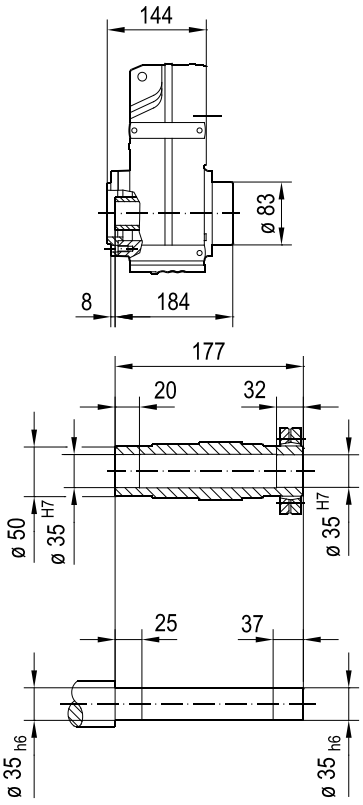

FVZ47..

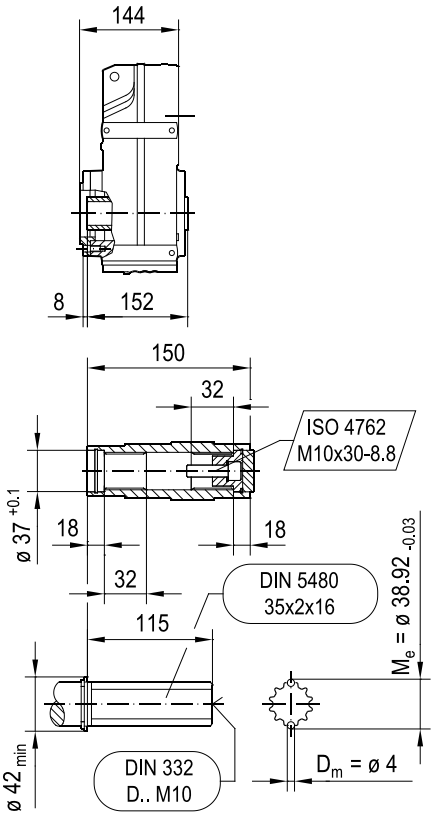

(→ 📖 4.1)	DRN										
	63MS	63M	71MS	71M	80MK	80MS	80M	90S	90L	100LS	100L/LM
AC	115	115	139	139	156	156	156	179	179	197	197
AD	98	98	118	118	128	128	128	140	140	157	157
ADS	98	98	129	129	139	139	139	150	150	158	158
L	334	348	350	370	381	398	427	428	460	458	508
LS	390	404	417	437	462	479	508	522	554	552	602
LB	190	204	206	226	237	254	283	284	316	314	364
LBS	246	260	273	293	318	335	364	378	410	408	458

FZ47..

42 073 04 15

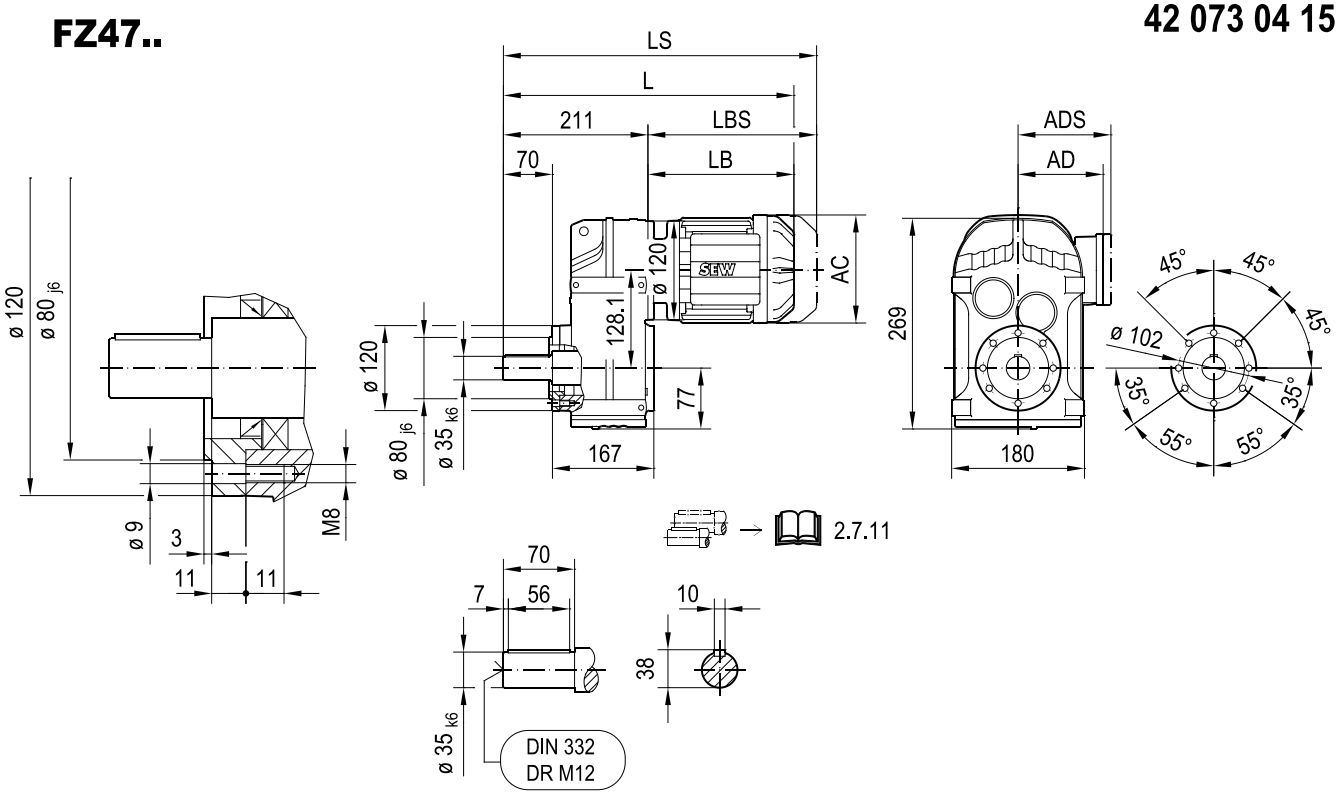

(→ 📖 4.1)	DRN										
	63MS	63M	71MS	71M	80MK	80MS	80M	90S	90L	100LS	100L/LM
AC	115	115	139	139	156	156	156	179	179	197	197
AD	98	98	118	118	128	128	128	140	140	157	157
ADS	98	98	129	129	139	139	139	150	150	158	158
L	391	405	407	427	438	455	484	485	517	515	565
LS	447	461	474	494	519	536	565	579	611	609	659
LB	190	204	206	226	237	254	283	284	316	314	364
LBS	246	260	273	293	318	335	364	378	410	408	458

FT47..

42 033 02 14

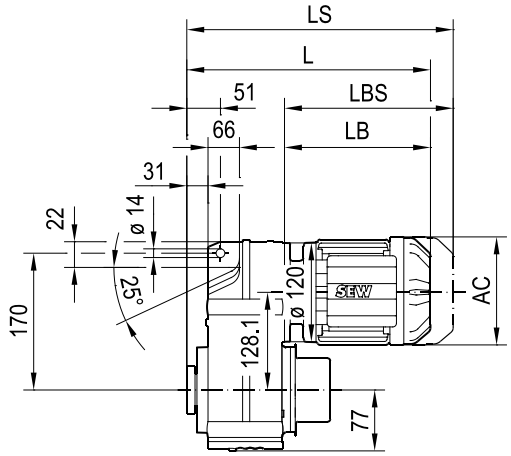

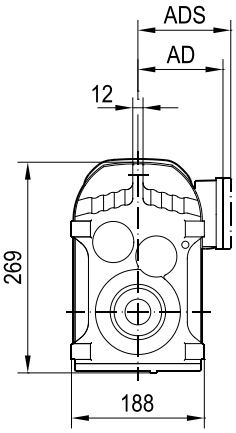

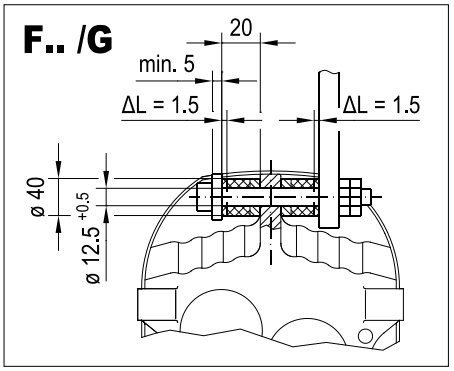

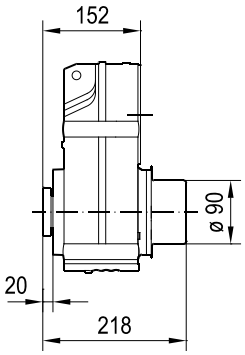

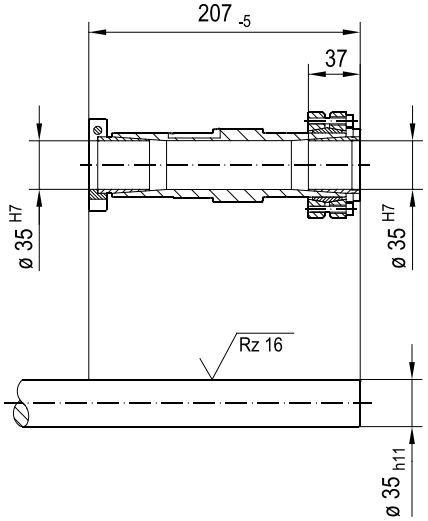

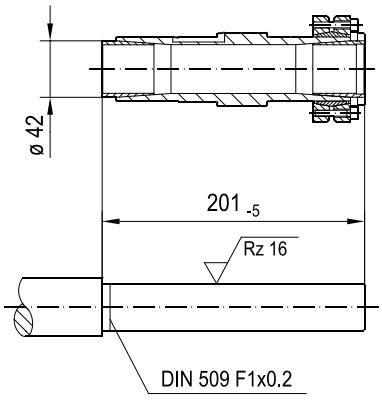

(→ 📖 4.1)	DRN							
	63MS	63M	71MS	71M	80MS			
AC	115	115	139	139	156			
AD	98	98	118	118	128			
ADS	98	98	129	129	139			
L	342	356	358	378	406			
LS	398	412	425	445	487			
LB	190	204	206	226	254			
LBS	246	260	273	293	335			

F57..

42 034 01 14

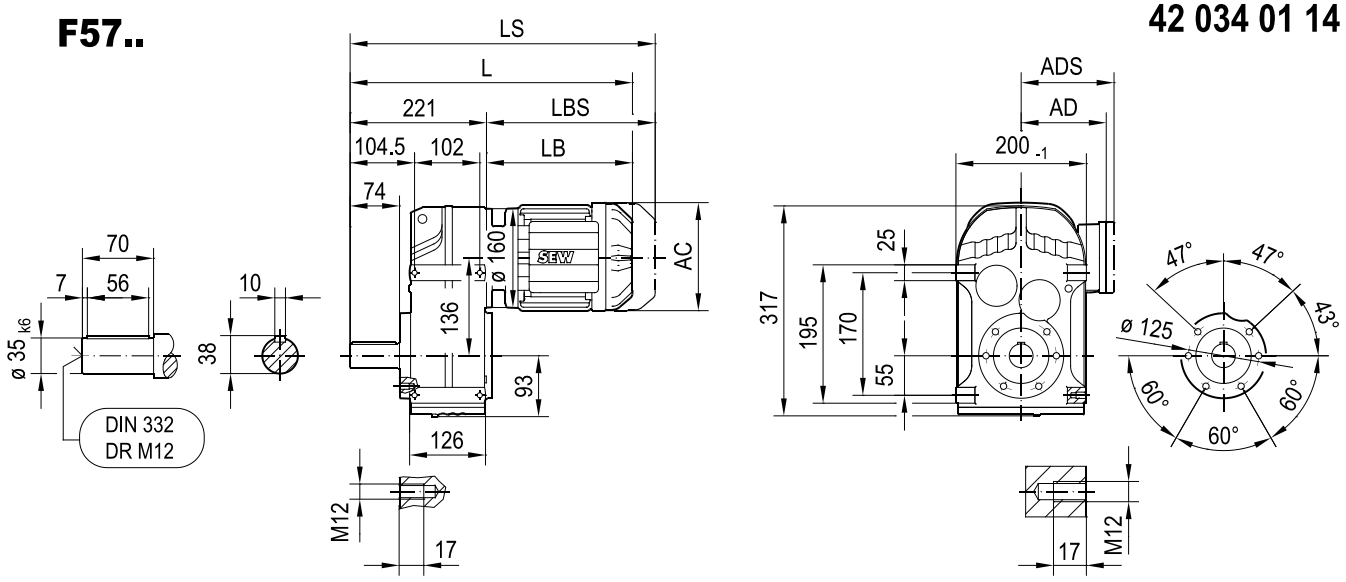

FA57B..

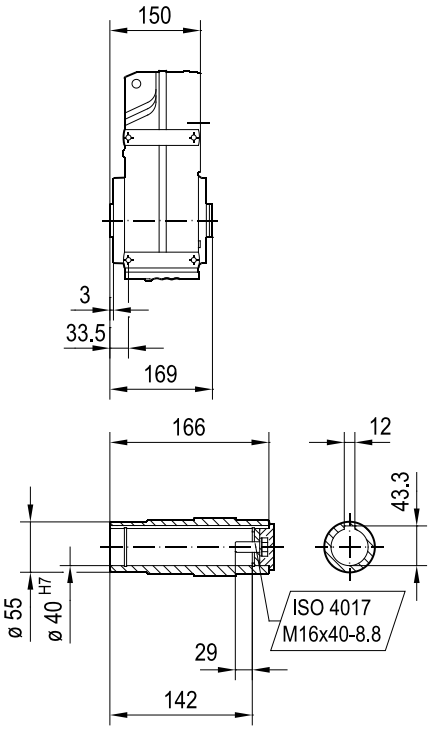

FH57B..
max. DRN100L

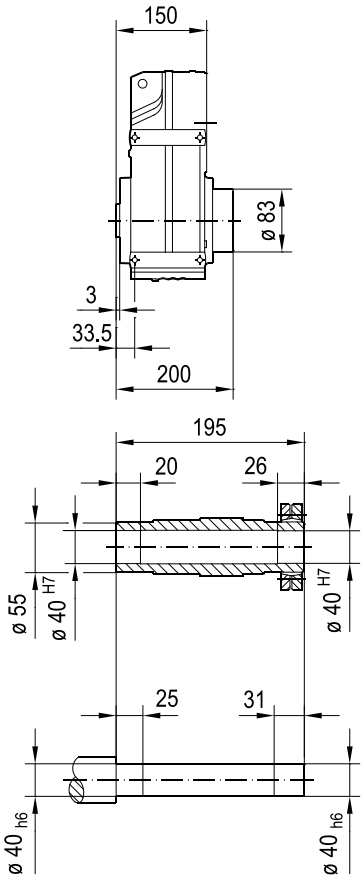

FV57B..

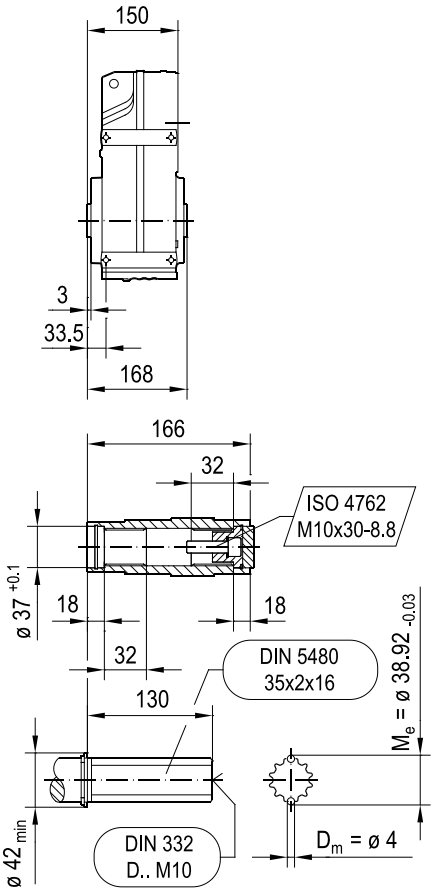

(→ 📖 4.1)	DRN													
	63MS	63M	71MS	71M	80MK	80MS	80M	90S	90L	100LS	100L/LM	112M	132S	132M
AC	115	115	139	139	156	156	156	179	179	197	197	221	221	261
AD	98	98	118	118	128	128	128	140	140	157	157	170	170	228
ADS	98	98	129	129	139	139	139	150	150	158	158	172	172	228
L	405	419	420	440	451	468	497	499	531	526	576	607	661	679
LS	461	475	488	508	532	549	578	592	624	620	670	719	773	817
LB	184	198	199	219	230	247	276	278	310	305	355	386	440	458
LBS	240	254	267	287	311	328	357	371	403	399	449	498	552	596

FF57..

42 035 00 14

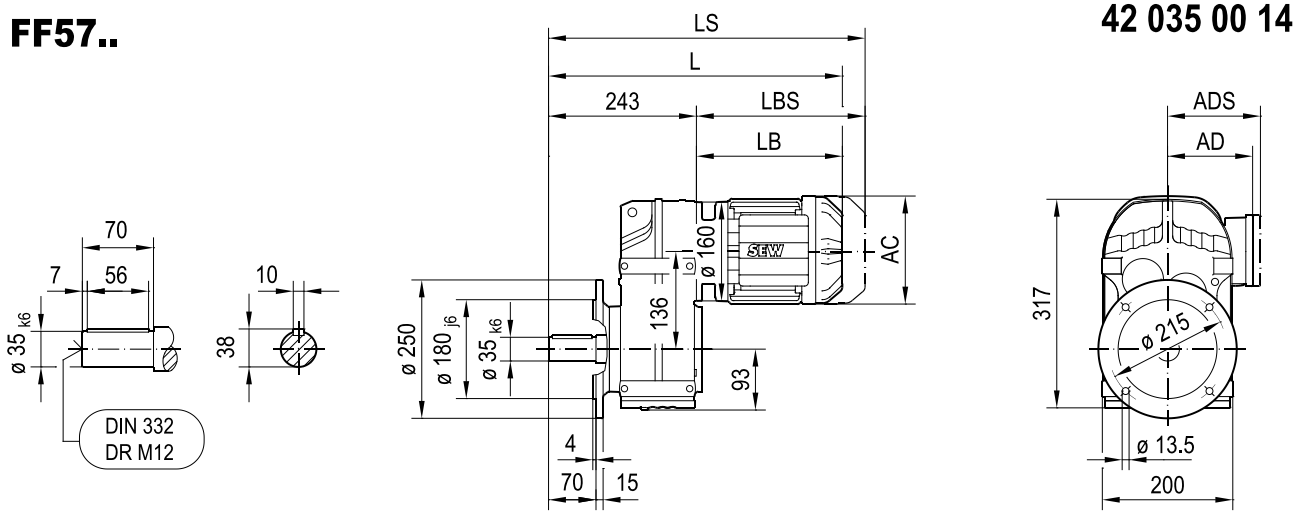

FAF57..

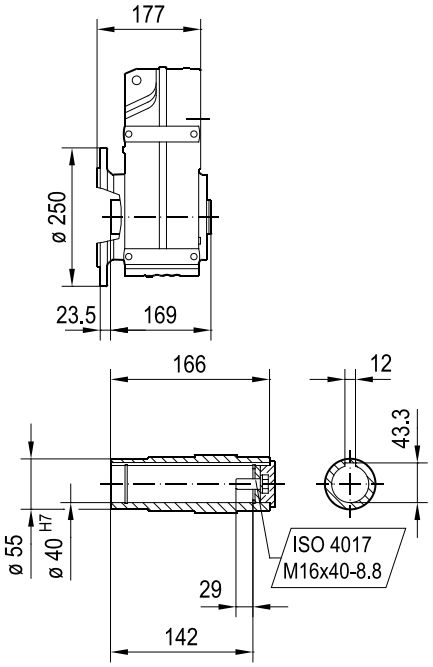

FHF57..
max. DRN100L

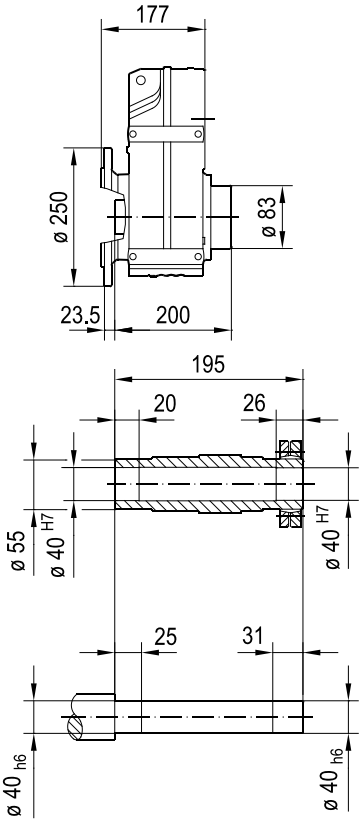

FVF57..

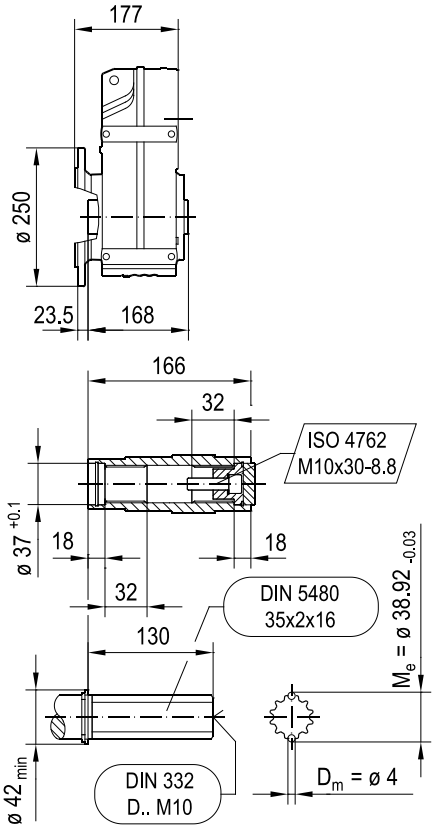

(→ 4.1)	DRN													
	63MS	63M	71MS	71M	80MK	80MS	80M	90S	90L	100LS	100L/LM	112M	132S	132M
AC	115	115	139	139	156	156	156	179	179	197	197	221	221	261
AD	98	98	118	118	128	128	128	140	140	157	157	170	170	228
ADS	98	98	129	129	139	139	139	150	150	158	158	172	172	228
L	427	441	442	462	473	490	519	521	553	548	598	629	683	701
LS	483	497	510	530	554	571	600	614	646	642	692	741	795	839
LB	184	198	199	219	230	247	276	278	310	305	355	386	440	458
LBS	240	254	267	287	311	328	357	371	403	399	449	498	552	596

FA57..

42 036 00 14

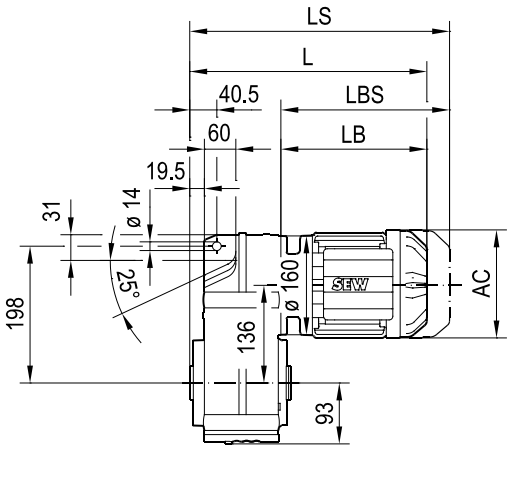

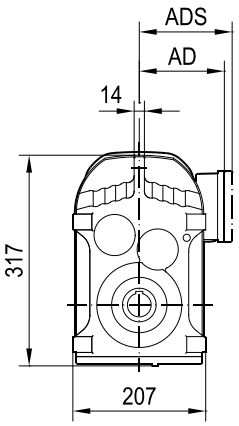

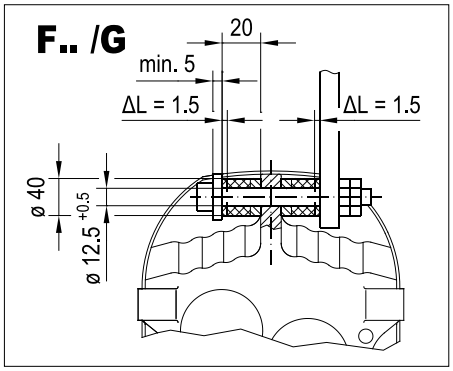

FA57..

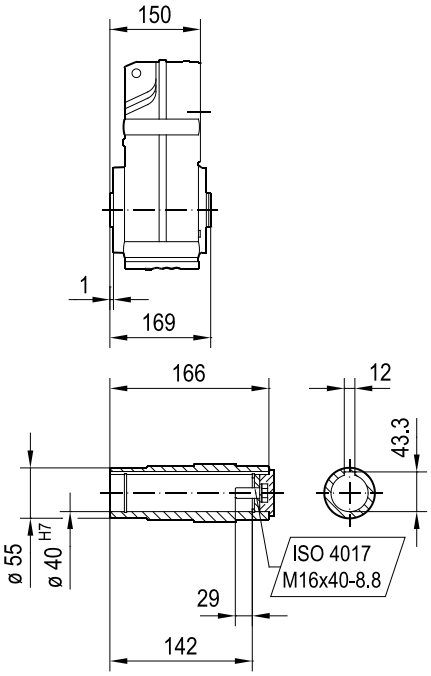

FH57..
max. DRN100L

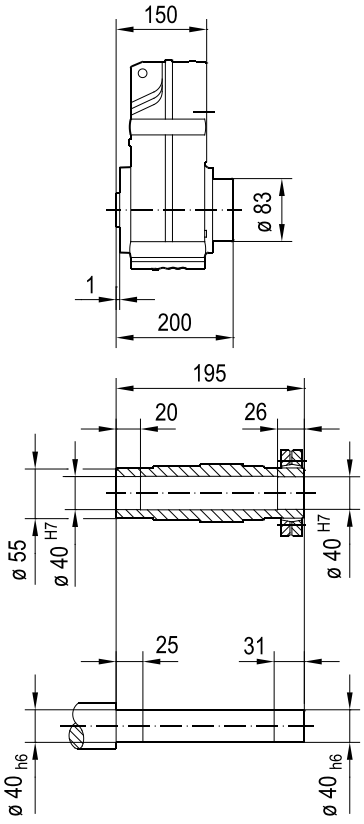

FV57..

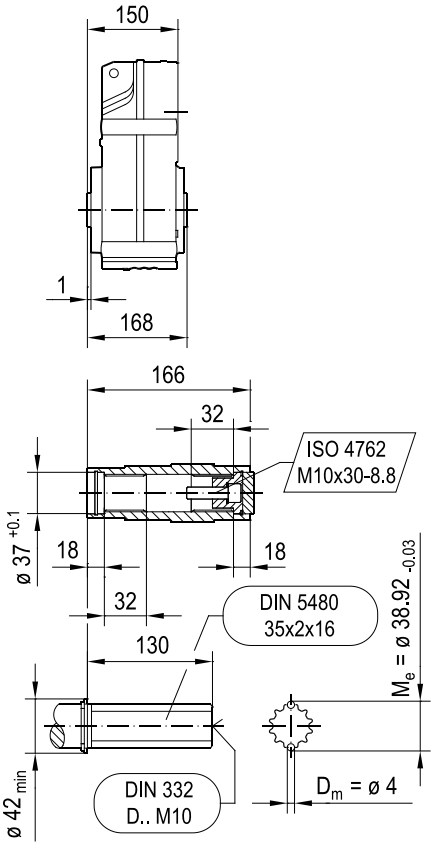

(→ 📖 4.1)	DRN													
	63MS	63M	71MS	71M	80MK	80MS	80M	90S	90L	100LS	100L/LM	112M	132S	132M
AC	115	115	139	139	156	156	156	179	179	197	197	221	221	261
AD	98	98	118	118	128	128	128	140	140	157	157	170	170	228
ADS	98	98	129	129	139	139	139	150	150	158	158	172	172	228
L	334	348	349	369	380	397	426	428	460	455	505	536	590	608
LS	390	404	417	437	461	478	507	521	553	549	599	648	702	746
LB	184	198	199	219	230	247	276	278	310	305	355	386	440	458
LBS	240	254	267	287	311	328	357	371	403	399	449	498	552	596

FAZ57..

42 037 00 14

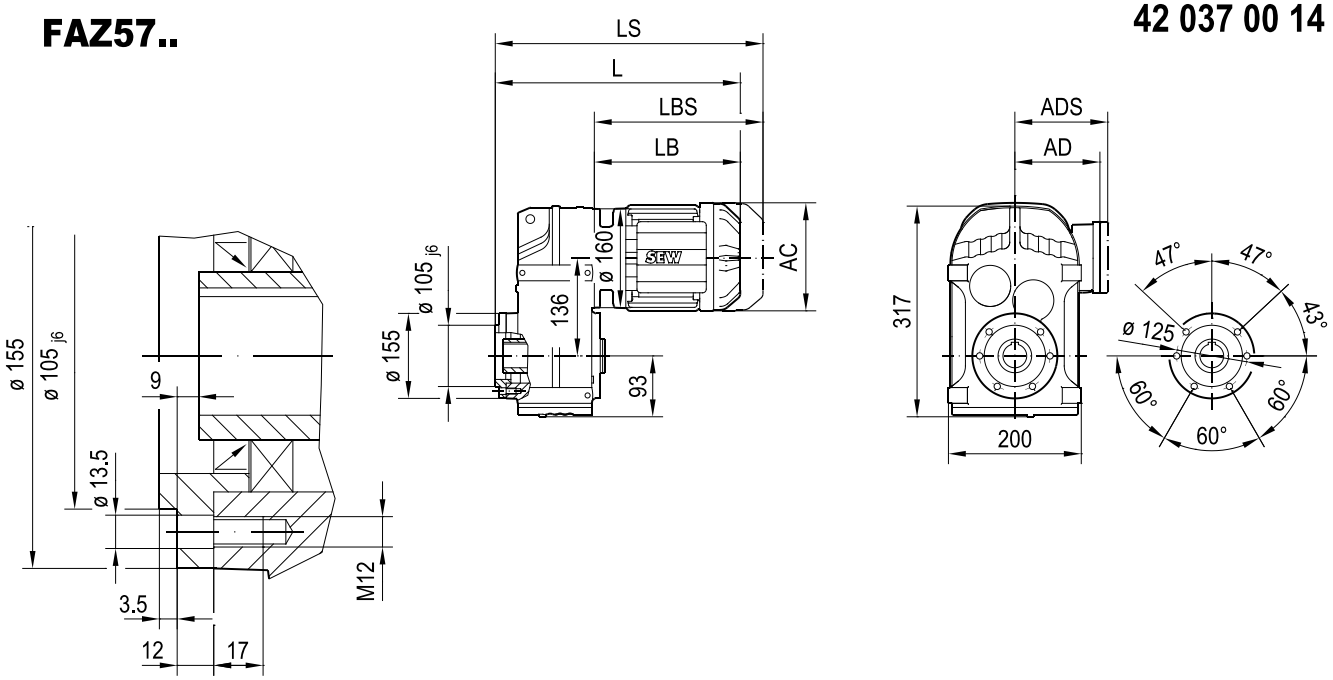

FAZ57..

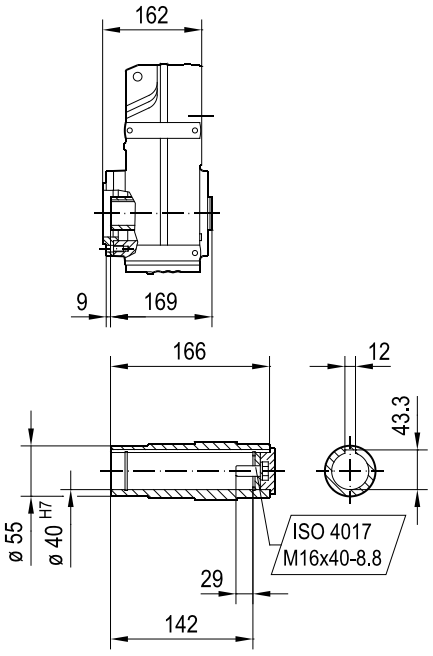

FHZ57..

max. DRN100L

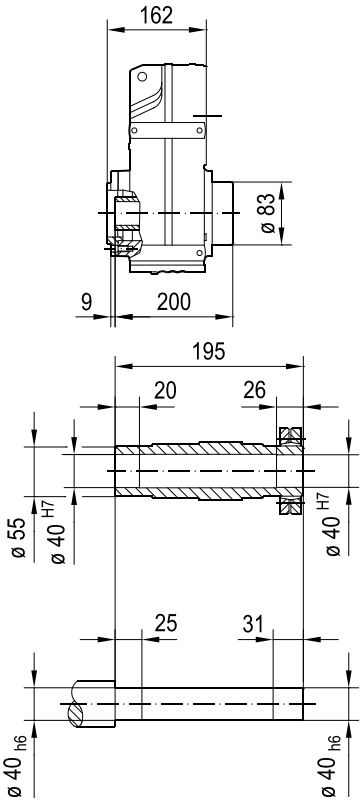

FVZ57..

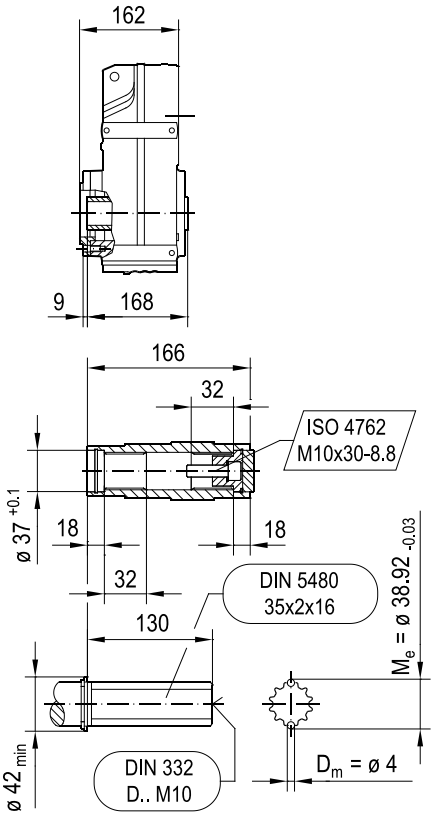

(→ 4.1)	DRN													
	63MS	63M	71MS	71M	80MK	80MS	80M	90S	90L	100LS	100L/LM	112M	132S	132M
AC	115	115	139	139	156	156	156	179	179	197	197	221	221	261
AD	98	98	118	118	128	128	128	140	140	157	157	170	170	228
ADS	98	98	129	129	139	139	139	150	150	158	158	172	172	228
L	346	360	361	381	392	409	438	440	472	467	517	548	602	620
LS	402	416	429	449	473	490	519	533	565	561	611	660	714	758
LB	184	198	199	219	230	247	276	278	310	305	355	386	440	458
LBS	240	254	267	287	311	328	357	371	403	399	449	498	552	596

FZ57..

42 074 02 15

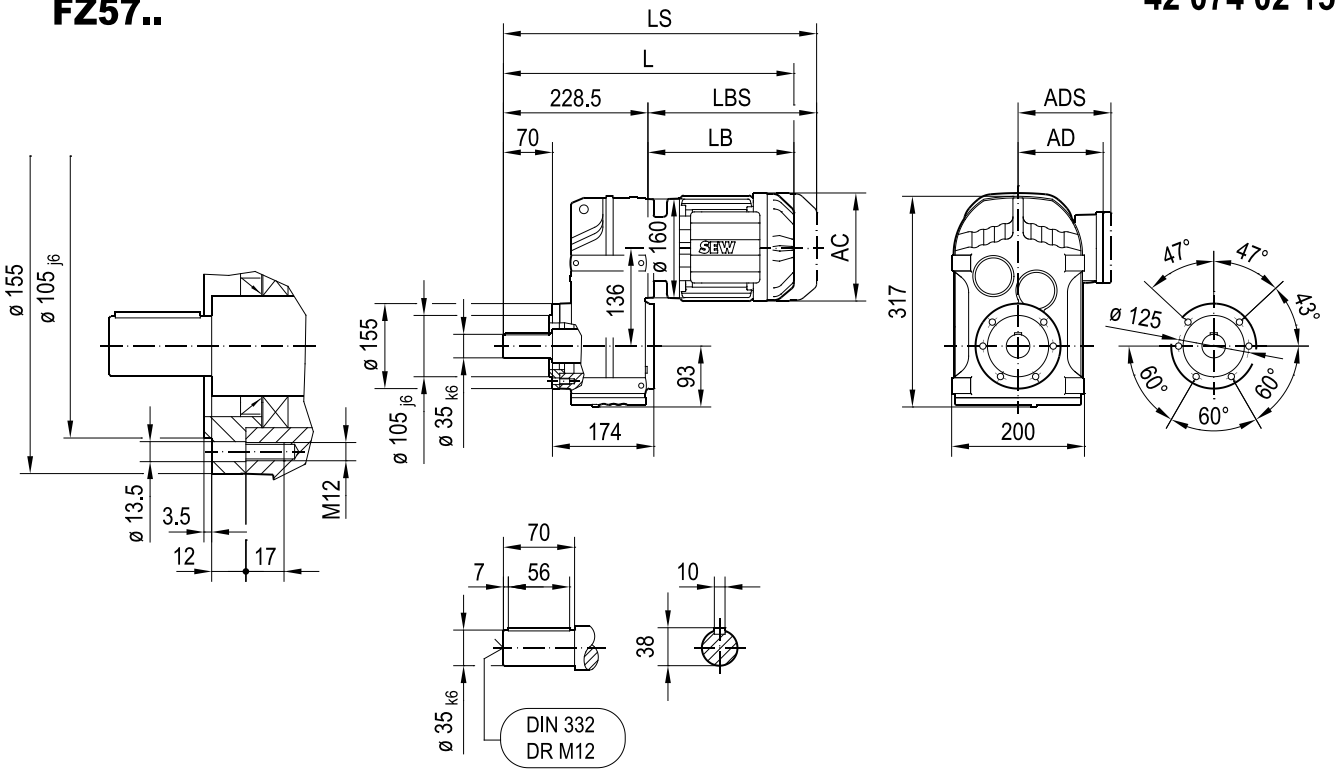

(→ 📖 4.1)	DRN													
	63MS	63M	71MS	71M	80MK	80MS	80M	90S	90L	100LS	100L/LM	112M	132S	132M
AC	115	115	139	139	156	156	156	179	179	197	197	221	221	261
AD	98	98	118	118	128	128	128	140	140	157	157	170	170	228
ADS	98	98	129	129	139	139	139	150	150	158	158	172	172	228
L	412	426	428	448	459	476	505	506	538	534	584	615	669	687
LS	468	482	495	515	540	557	586	600	632	627	677	727	781	824
LB	184	198	199	219	230	247	276	278	310	305	355	386	440	458
LBS	240	254	267	287	311	328	357	371	403	399	449	498	552	596

FT57..

42 038 02 14

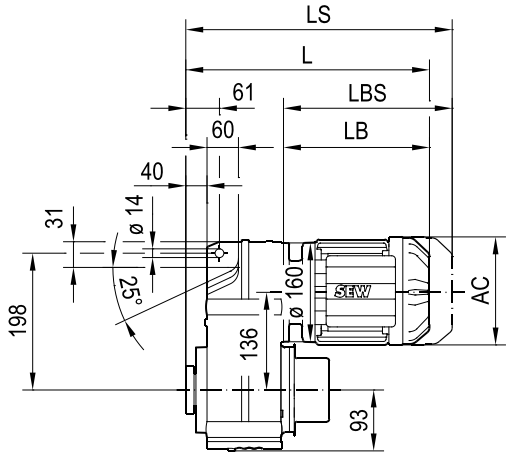

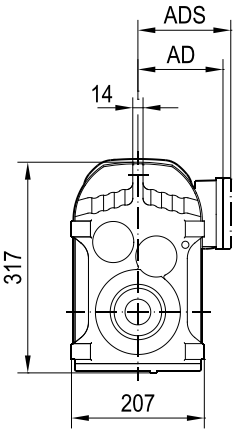

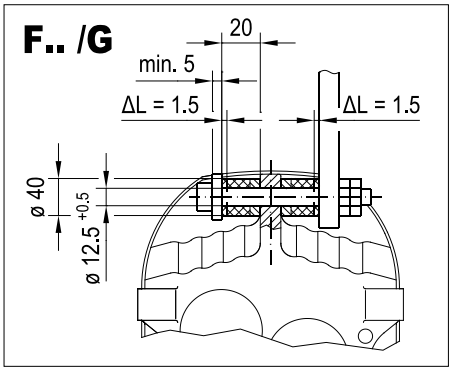

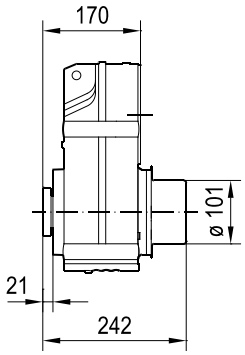

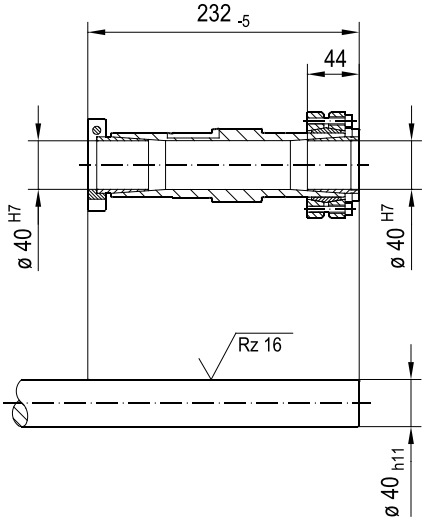

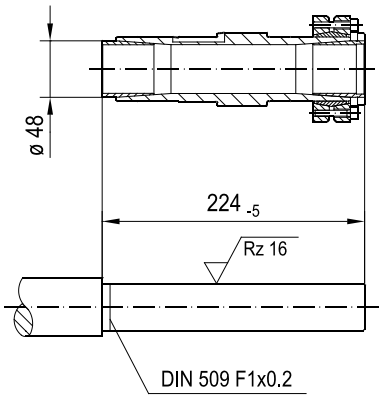

(→ 📖 4.1)	DRN							
	63MS	63M	71MS	71M	80MK	80MS	80M	90S
AC	115	115	139	139	156	156	156	179
AD	98	98	118	118	128	128	128	140
ADS	98	98	129	129	139	139	139	150
L	354	368	369	389	400	417	446	448
LS	410	424	437	457	481	498	527	541
LB	184	198	199	219	230	247	276	278
LBS	240	254	267	287	311	328	357	371

F67..

42 039 01 14

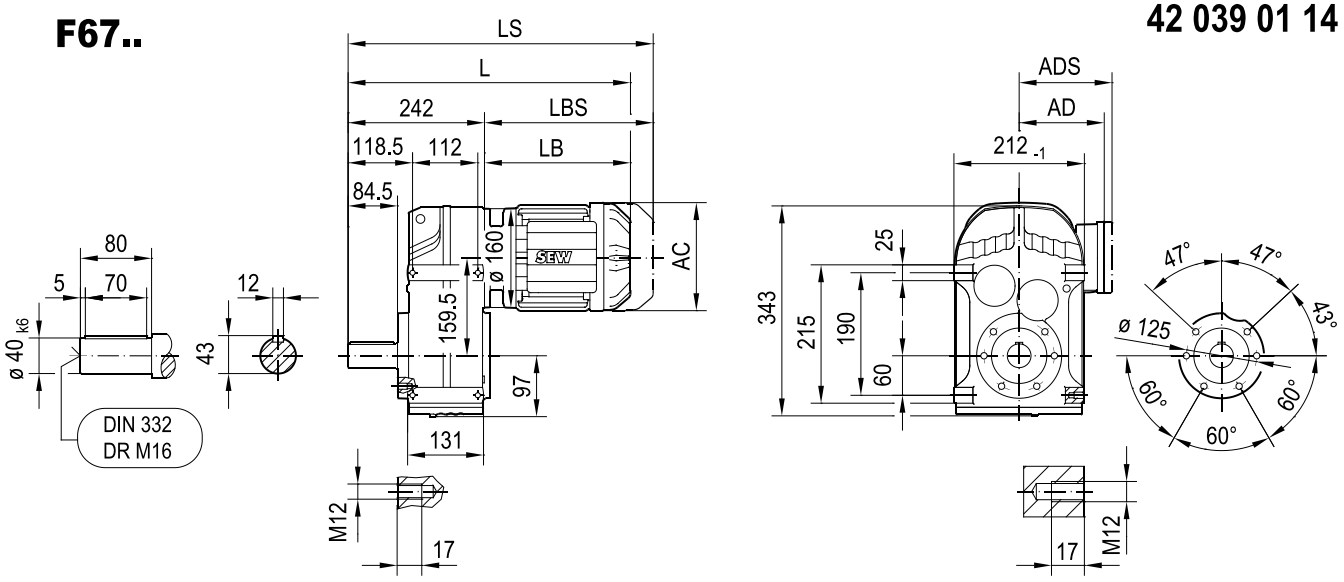

FA67B..

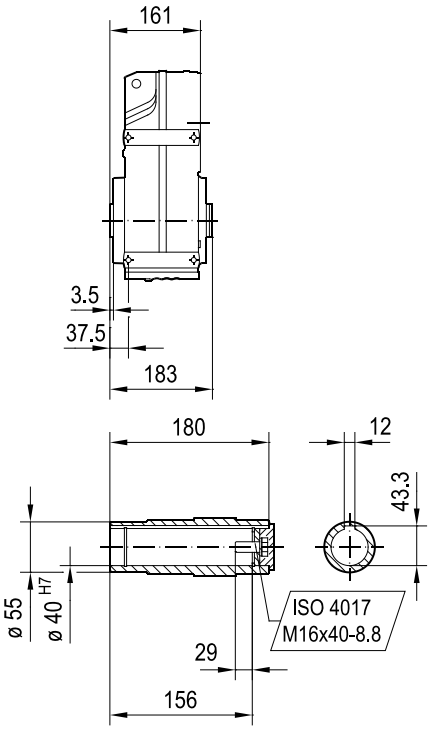

FH67B..

max. DRN132S

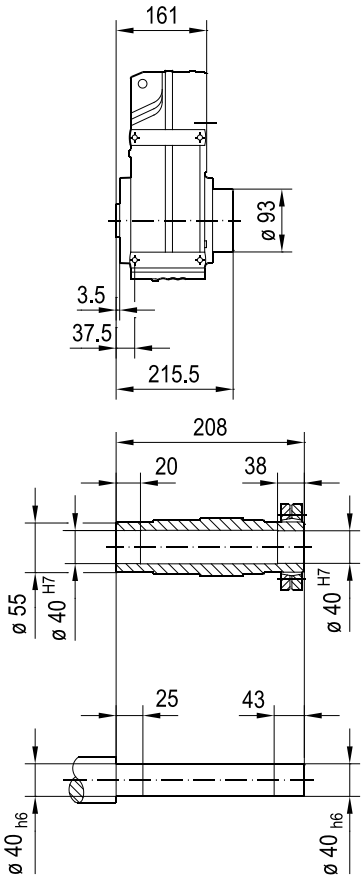

FV67B..

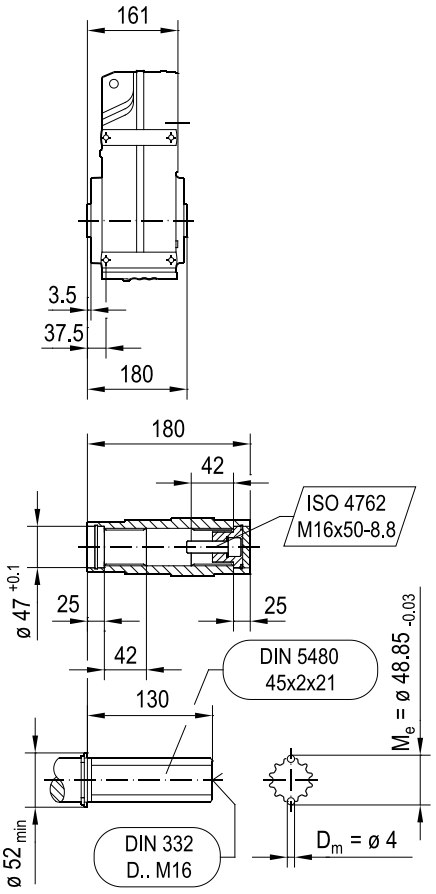

(→ 📖 4.1)	DRN												
	63M	71MS	71M	80MK	80MS	80M	90S	90L	100LS	100L/LM	112M	132S	132M
AC	115	139	139	156	156	156	179	179	197	197	221	221	261
AD	98	118	118	128	128	128	140	140	157	157	170	170	228
ADS	98	129	129	139	139	139	150	150	158	158	172	172	228
L	440	441	461	472	489	518	520	552	547	597	628	682	700
LS	496	509	529	553	570	599	613	645	641	691	740	794	838
LB	198	199	219	230	247	276	278	310	305	355	386	440	458
LBS	254	267	287	311	328	357	371	403	399	449	498	552	596

FF67..

42 040 00 14

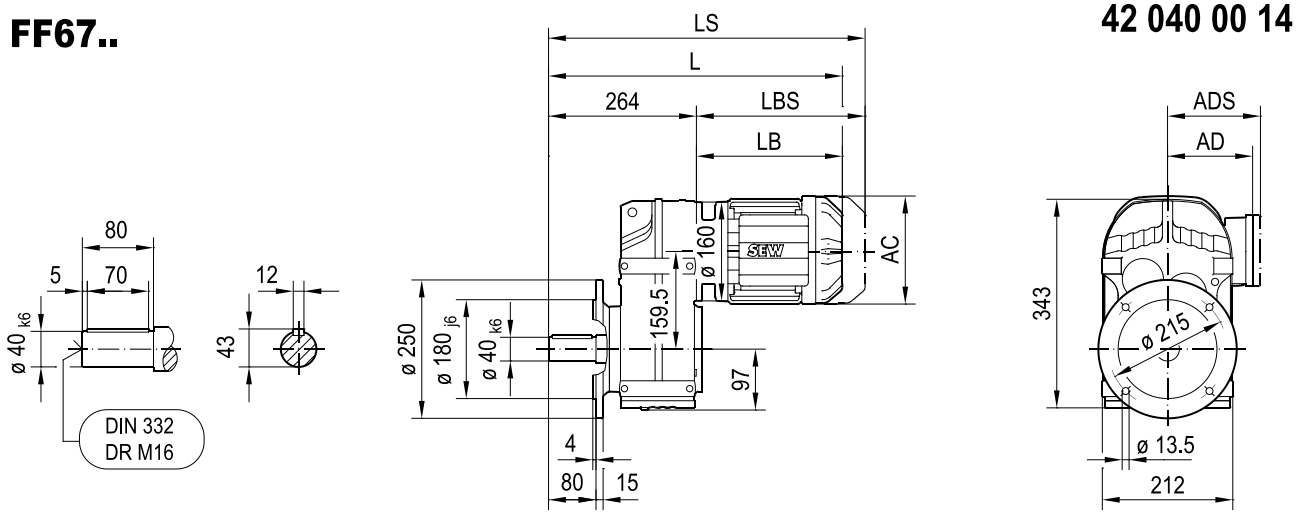

FAF67..

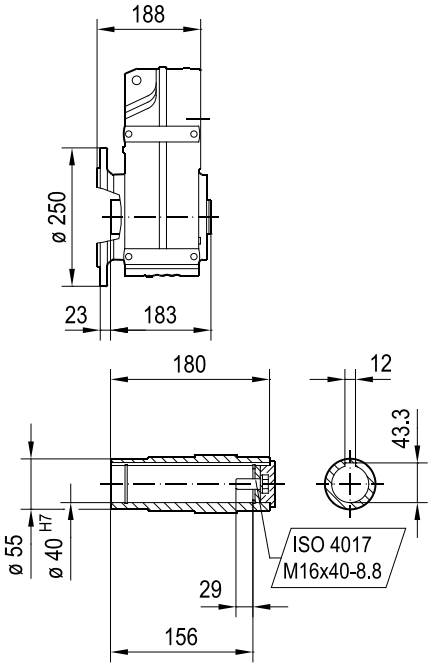

FHF67..
max. DRN132S

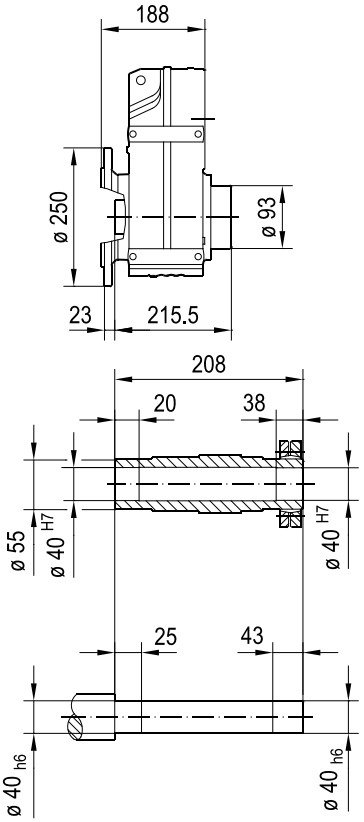

FVF67..

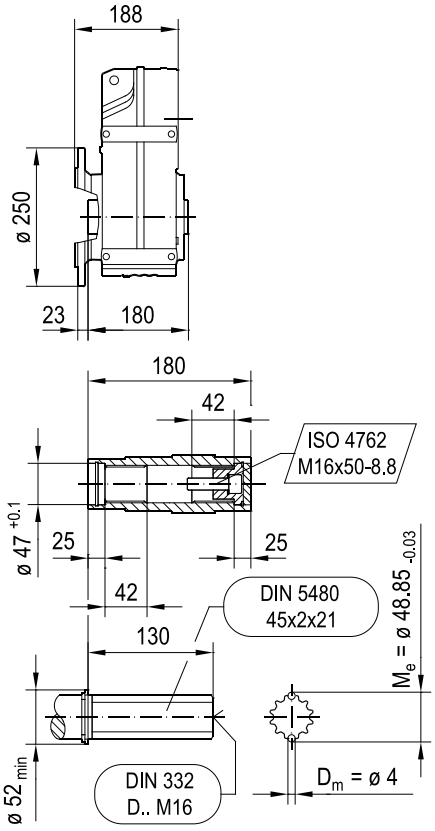

(→ 📖 4.1)	DRN												
	63M	71MS	71M	80MK	80MS	80M	90S	90L	100LS	100L/LM	112M	132S	132M
AC	115	139	139	156	156	156	179	179	197	197	221	221	261
AD	98	118	118	128	128	128	140	140	157	157	170	170	228
ADS	98	129	129	139	139	139	150	150	158	158	172	172	228
L	462	463	483	494	511	540	542	574	569	619	650	704	722
LS	518	531	551	575	592	621	635	667	663	713	762	816	860
LB	198	199	219	230	247	276	278	310	305	355	386	440	458
LBS	254	267	287	311	328	357	371	403	399	449	498	552	596

FM67..

42 112 00 17

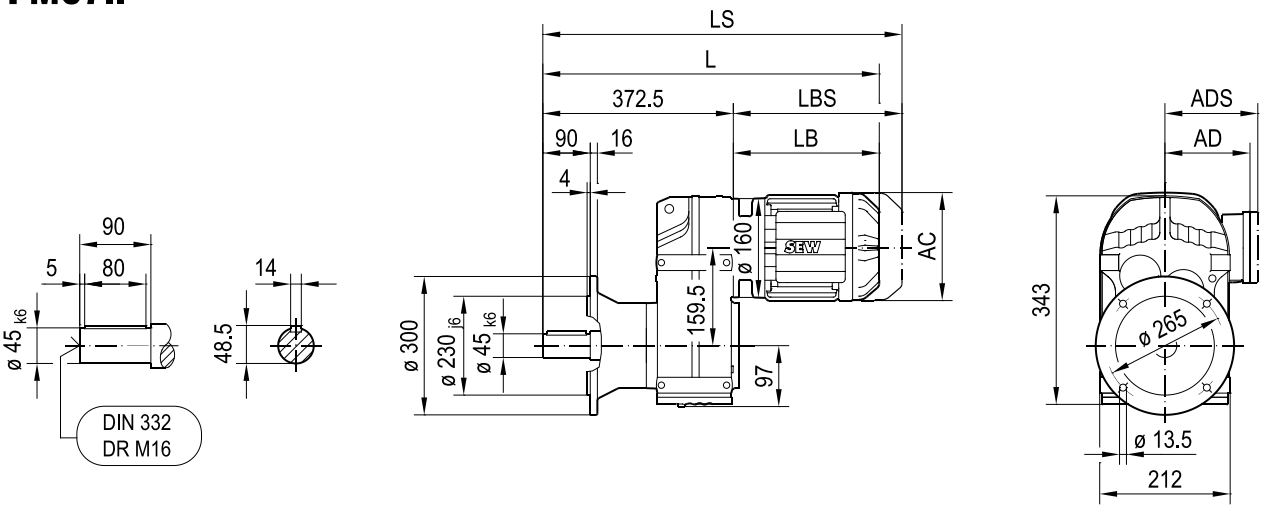

FAM67..

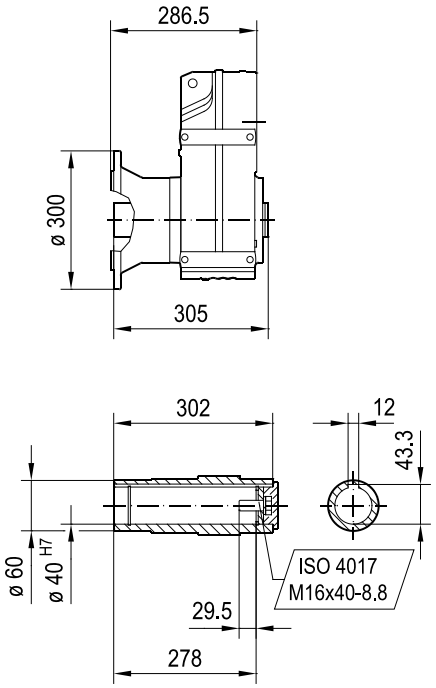

(→ 📖 4.1)	DRN												
	63M	71MS	71M	80MK	80MS	80M	90S	90L	100LS	100L/LM	112M	132S	132M
AC	115	139	139	156	156	156	179	179	197	197	221	221	261
AD	98	118	118	128	128	128	140	140	157	157	170	170	228
ADS	98	129	129	139	139	139	150	150	158	158	172	172	228
L	570	572	592	603	620	649	650	682	678	728	759	813	831
LS	626	639	659	684	701	730	744	776	771	821	871	925	968
LB	198	199	219	230	247	276	278	310	305	355	386	440	458
LBS	254	267	287	311	328	357	371	403	399	449	498	552	596

FA67..

42 041 00 14

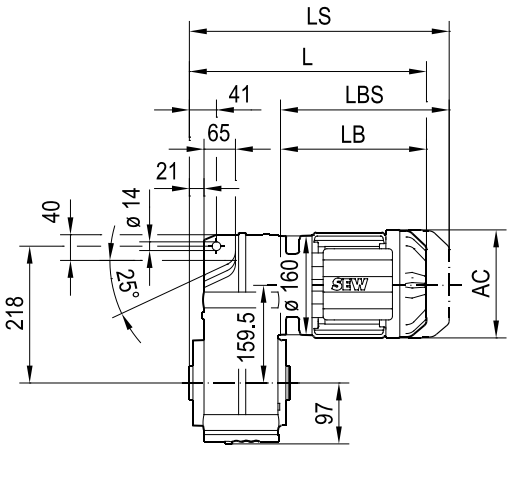

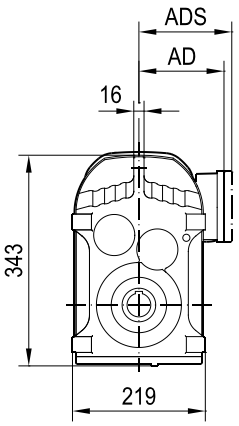

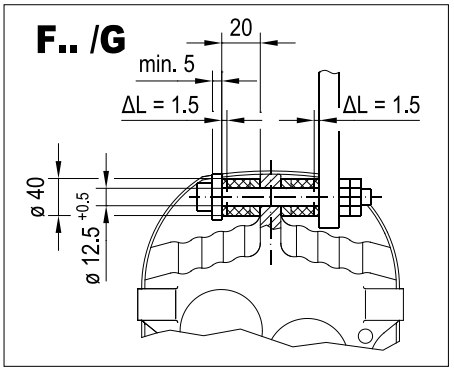

FA67..

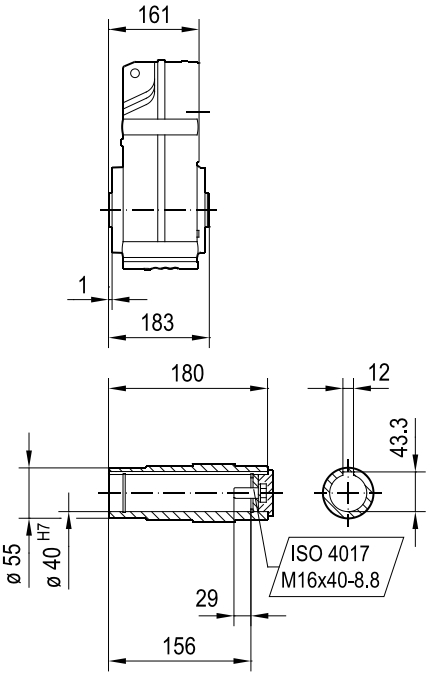

FH67..
max. DRN132S

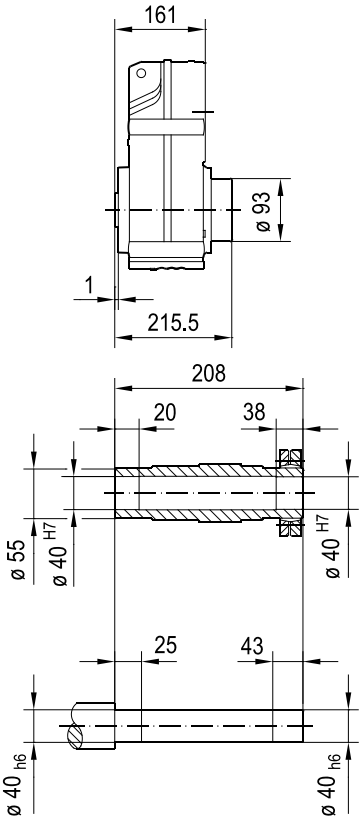

FV67..

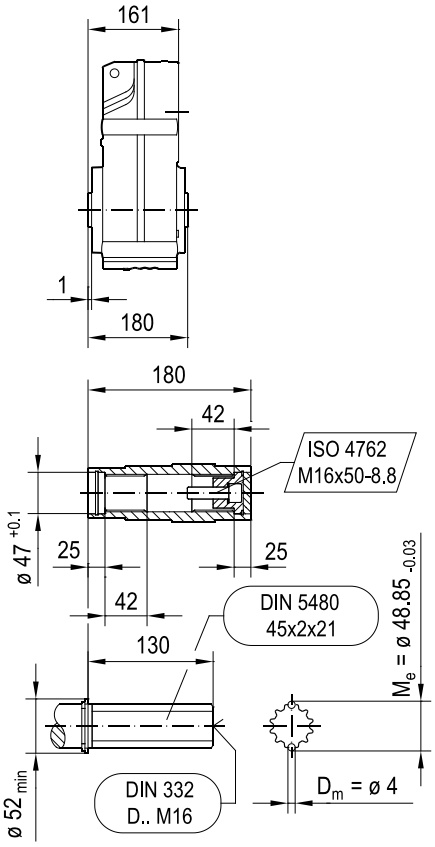

(→ 📖 4.1)	DRN												
	63M	71MS	71M	80MK	80MS	80M	90S	90L	100LS	100L/LM	112M	132S	132M
AC	115	139	139	156	156	156	179	179	197	197	221	221	261
AD	98	118	118	128	128	128	140	140	157	157	170	170	228
ADS	98	129	129	139	139	139	150	150	158	158	172	172	228
L	359	360	380	391	408	437	439	471	466	516	547	601	619
LS	415	428	448	472	489	518	532	564	560	610	659	713	757
LB	198	199	219	230	247	276	278	310	305	355	386	440	458
LBS	254	267	287	311	328	357	371	403	399	449	498	552	596

FAZ67..

42 042 00 14

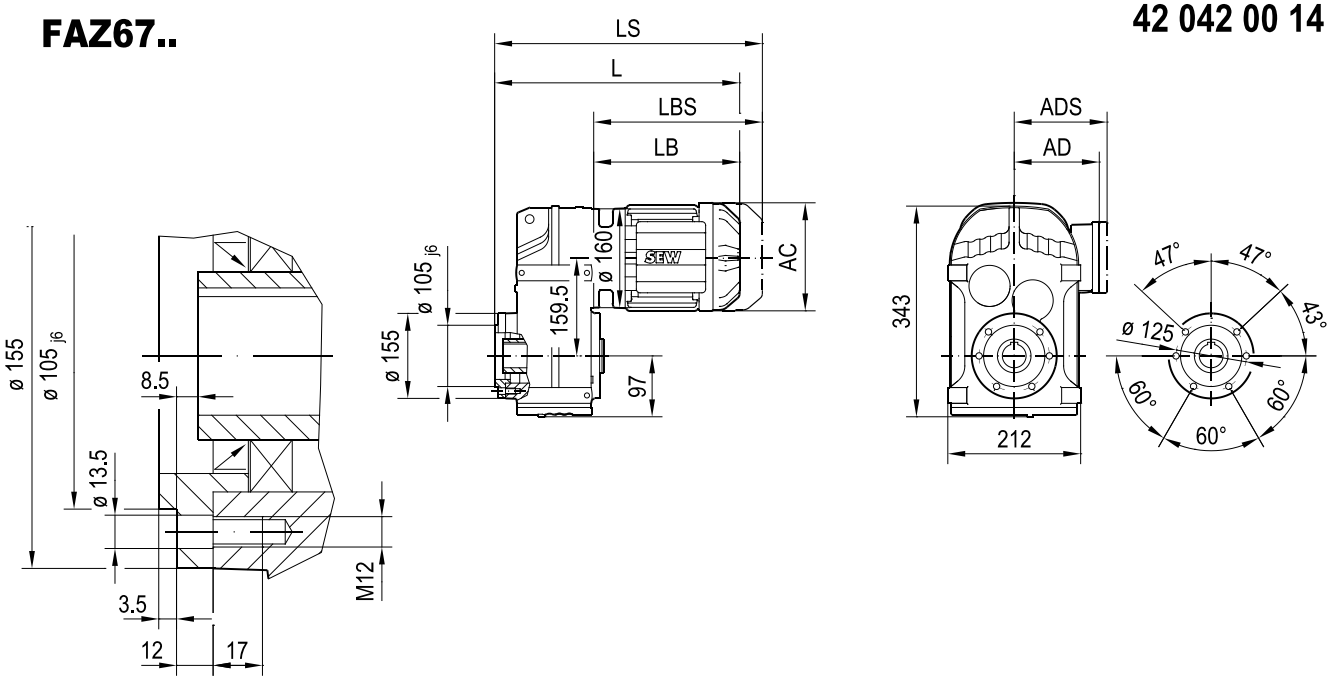

FAZ67..

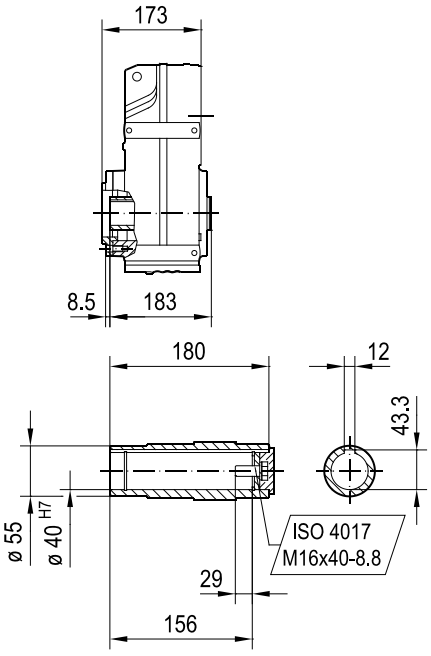

FHZ67..
max. DRN132S

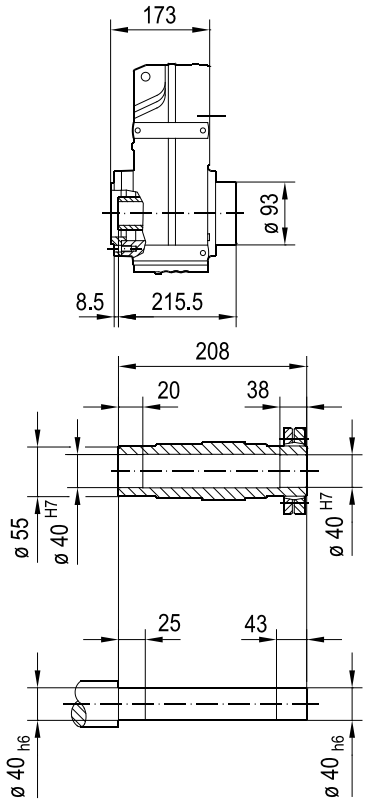

FVZ67..

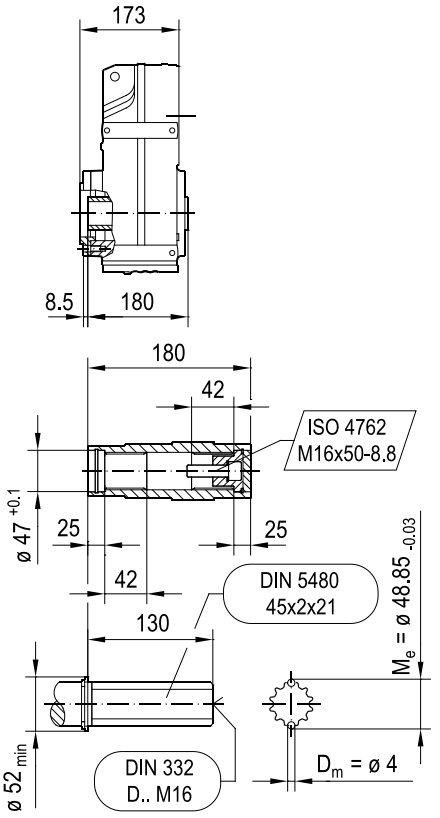

(→ 📖 4.1)	DRN												
	63M	71MS	71M	80MK	80MS	80M	90S	90L	100LS	100L/LM	112M	132S	132M
AC	115	139	139	156	156	156	179	179	197	197	221	221	261
AD	98	118	118	128	128	128	140	140	157	157	170	170	228
ADS	98	129	129	139	139	139	150	150	158	158	172	172	228
L	371	372	392	403	420	449	451	483	478	528	559	613	631
LS	427	440	460	484	501	530	544	576	572	622	671	725	769
LB	198	199	219	230	247	276	278	310	305	355	386	440	458
LBS	254	267	287	311	328	357	371	403	399	449	498	552	596

FZ67..

42 075 02 15

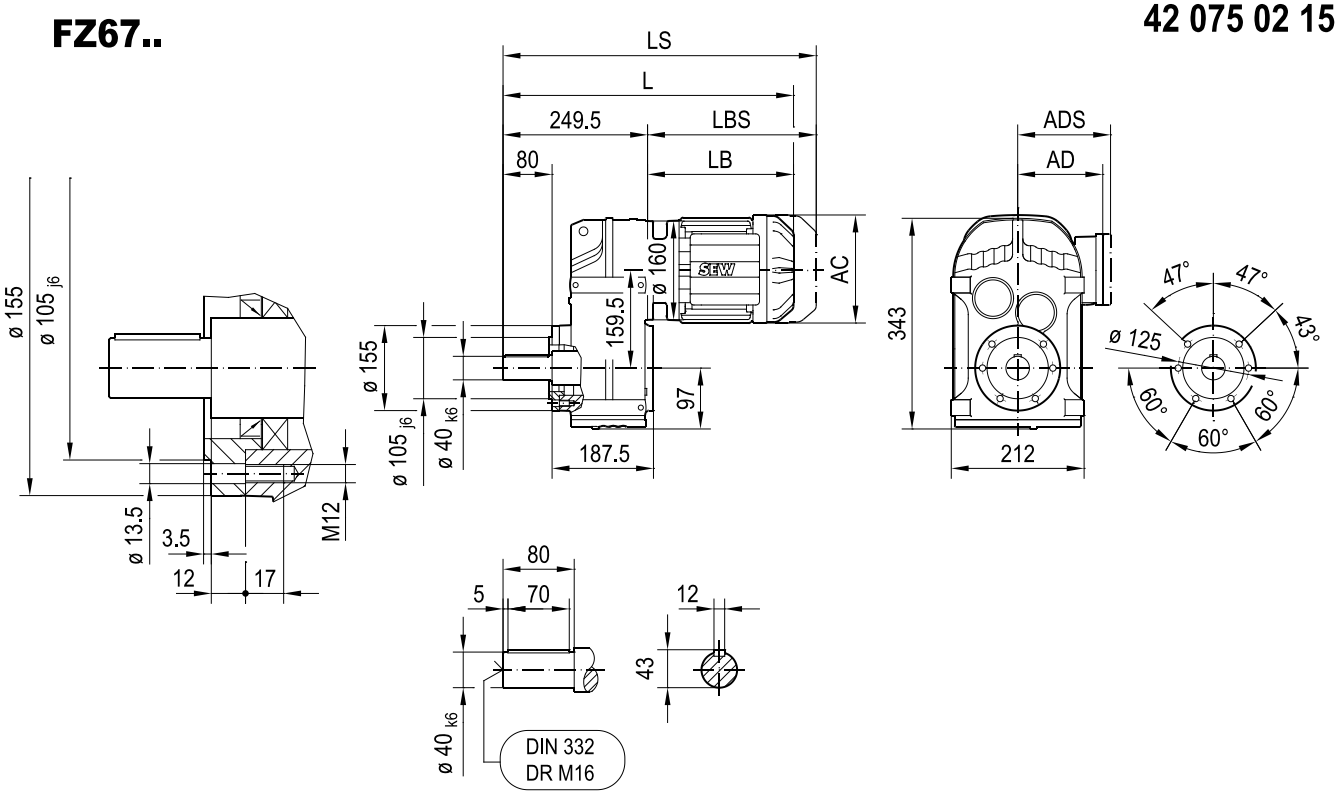

(→ 📖 4.1)	DRN												
	63M	71MS	71M	80MK	80MS	80M	90S	90L	100LS	100L/LM	112M	132S	132M
AC	115	139	139	156	156	156	179	179	197	197	221	221	261
AD	98	118	118	128	128	128	140	140	157	157	170	170	228
ADS	98	129	129	139	139	139	150	150	158	158	172	172	228
L	447	449	469	480	497	526	527	559	555	605	636	690	708
LS	503	516	536	561	578	607	621	653	648	698	748	802	845
LB	198	199	219	230	247	276	278	310	305	355	386	440	458
LBS	254	267	287	311	328	357	371	403	399	449	498	552	596

FT67..

42 043 02 14

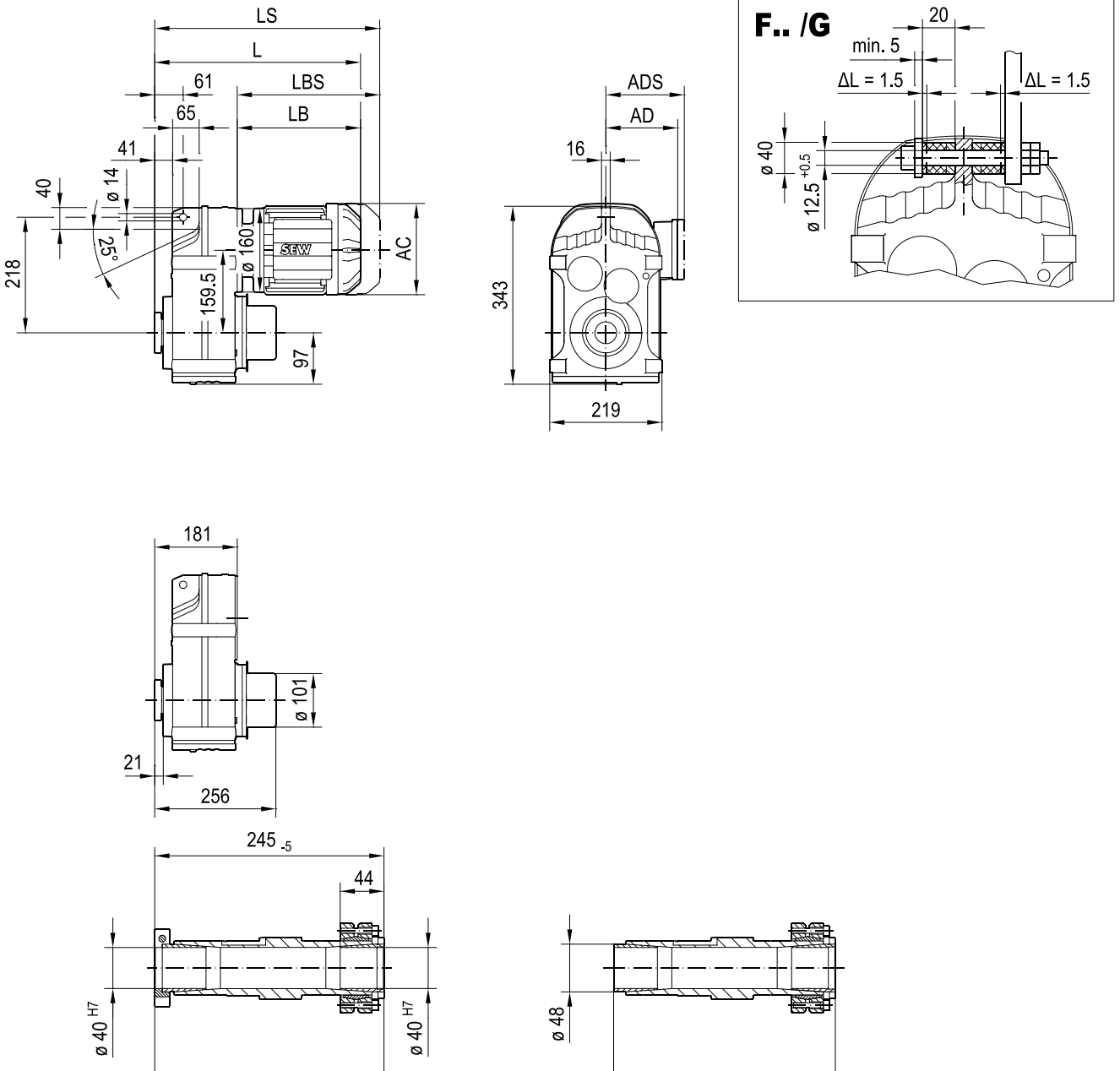

(→ 📖 4.1)	DRN									
	63M	71MS	71M	80MK	80MS	80M	90S	90L	100LS	100L/LM
AC	115	139	139	156	156	156	179	179	197	197
AD	98	118	118	128	128	128	140	140	157	157
ADS	98	129	129	139	139	139	150	150	158	158
L	379	380	400	411	428	457	459	491	486	536
LS	435	448	468	492	509	538	552	584	580	630
LB	198	199	219	230	247	276	278	310	305	355
LBS	254	267	287	311	328	357	371	403	399	449

F77..

42 044 01 14

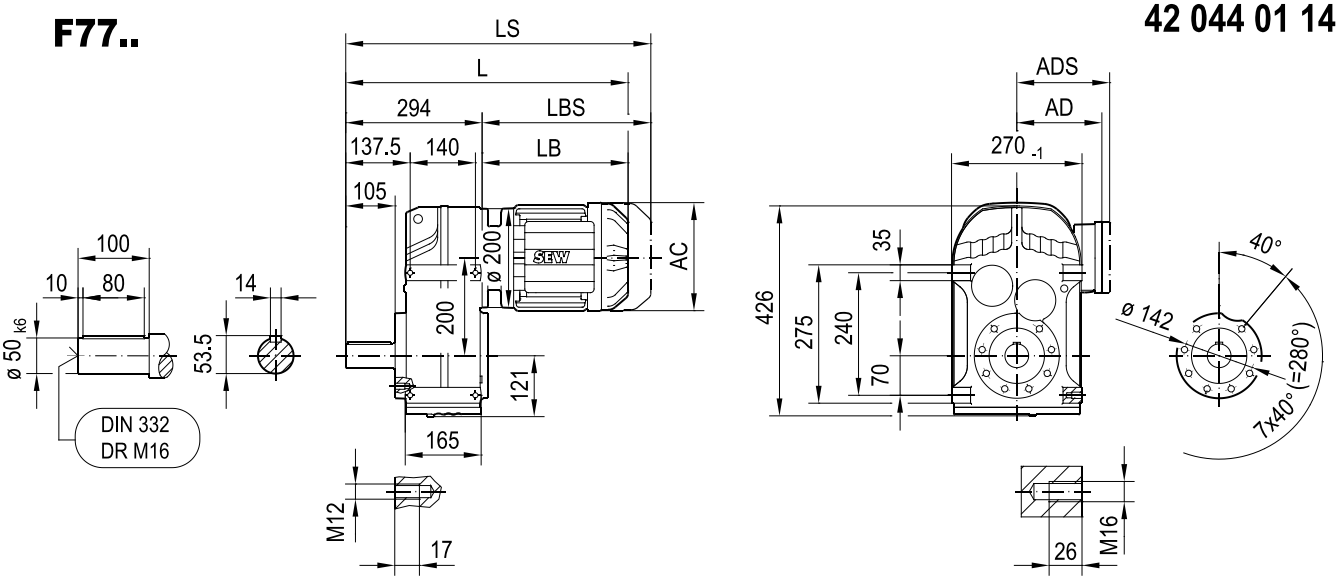

FA77B..

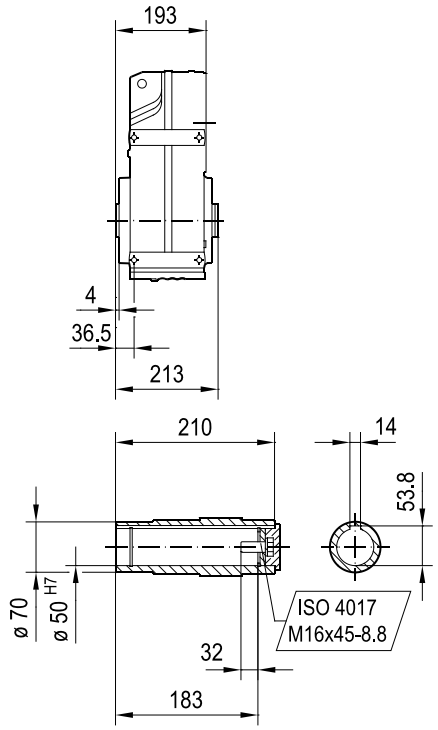

FH77B..

max. DRN132L

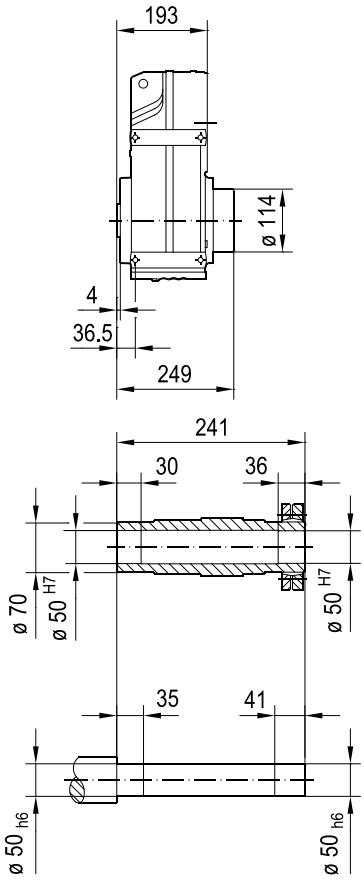

FV77B..

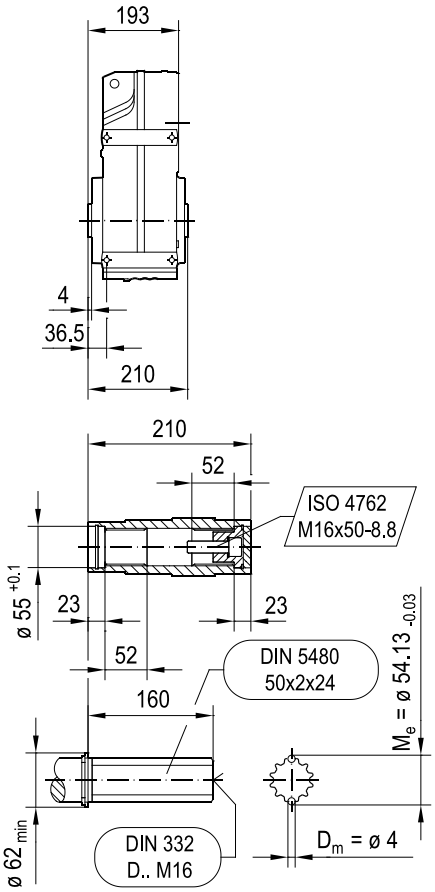

(→ 4.1)	DRN													
	71MS	71M	80MK	80MS	80M	90S	90L	100LS	100L/LM	112M	132S	132M	132L	160..
AC	139	139	156	156	156	179	179	197	197	221	221	261	261	314
AD	118	118	128	128	128	140	140	157	157	170	170	228	228	253
ADS	129	129	139	139	139	150	150	158	158	172	172	228	228	253
L	486	506	517	534	563	565	597	592	642	673	723	741	767	833
LS	554	574	598	615	644	658	690	686	736	785	835	879	904	1022
LB	192	212	223	240	269	271	303	298	348	379	429	447	473	539
LBS	260	280	304	321	350	364	396	392	442	491	541	585	610	728

FF77..

42 045 00 14

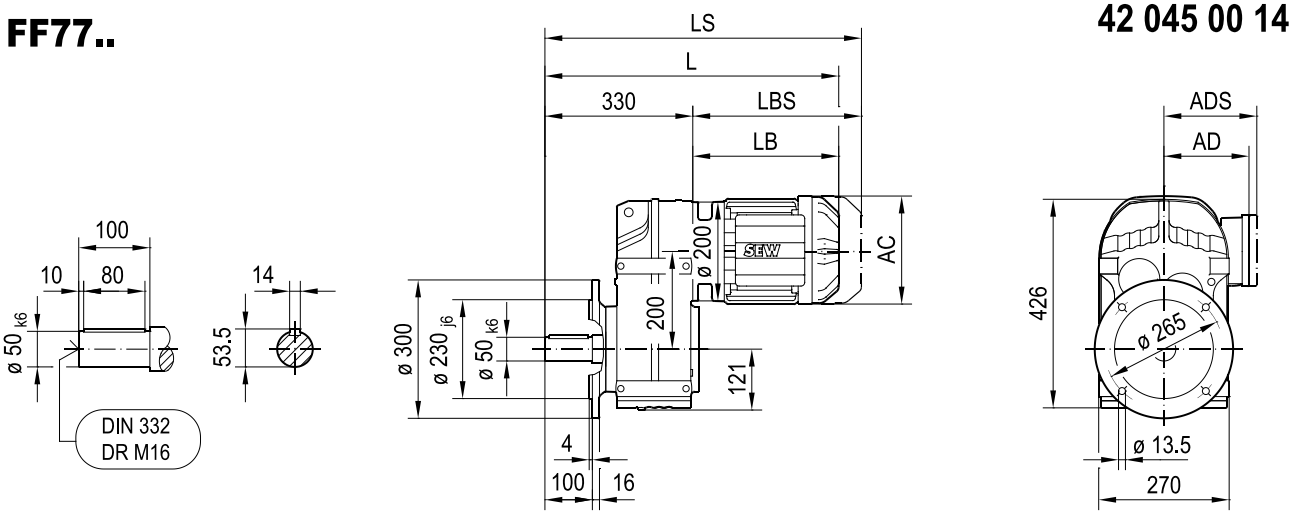

FAF77..

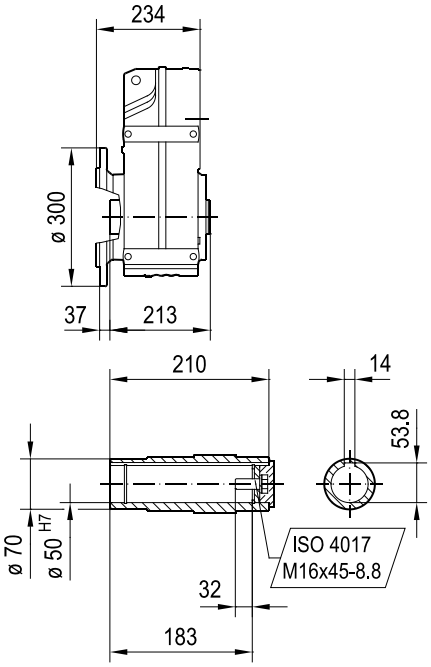

FHF77..
max. DRN132L

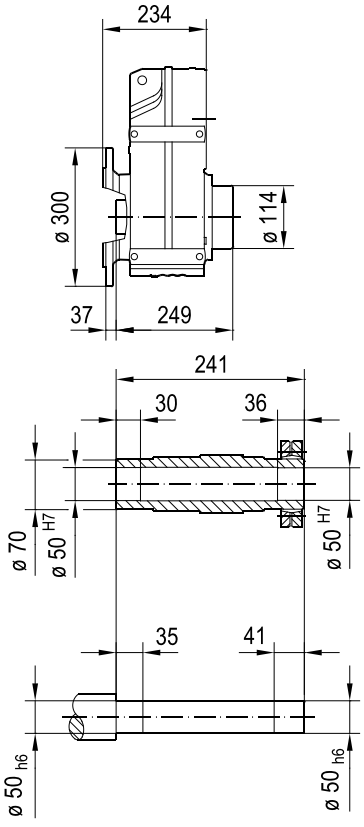

FVF77..

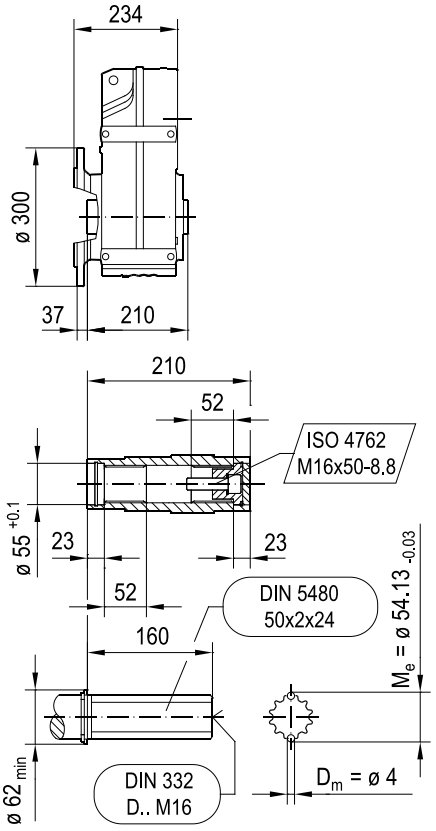

(→ 📖 4.1)	DRN													
	71MS	71M	80MK	80MS	80M	90S	90L	100LS	100L/LM	112M	132S	132M	132L	160..
AC	139	139	156	156	156	179	179	197	197	221	221	261	261	314
AD	118	118	128	128	128	140	140	157	157	170	170	228	228	253
ADS	129	129	139	139	139	150	150	158	158	172	172	228	228	253
L	522	542	553	570	599	601	633	628	678	709	759	777	803	869
LS	590	610	634	651	680	694	726	722	772	821	871	915	940	1058
LB	192	212	223	240	269	271	303	298	348	379	429	447	473	539
LBS	260	280	304	321	350	364	396	392	442	491	541	585	610	728

FM77..

42 113 01 17

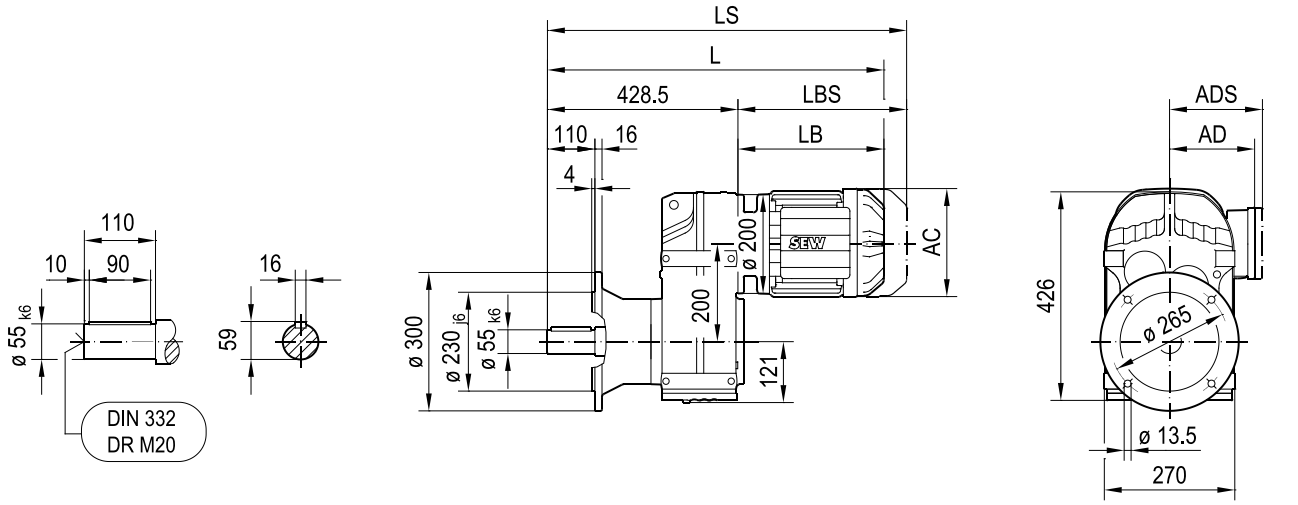

FAM77..

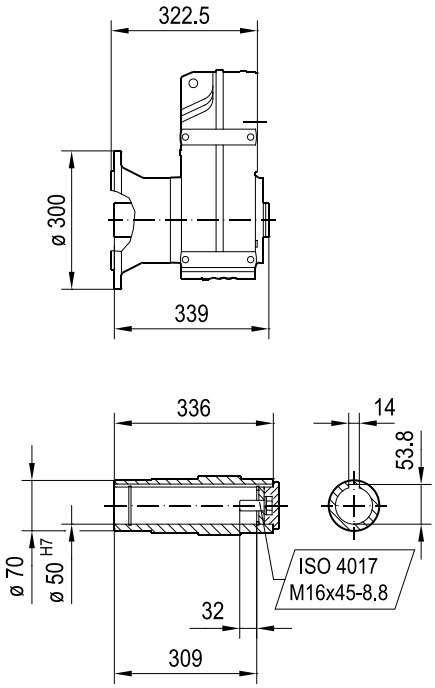

(→ 📖 4.1)	DRN													
	71MS	71M	80MK	80MS	80M	90S	90L	100LS	100L/LM	112M	132S	132M	132L	160..
AC	139	139	156	156	156	179	179	197	197	221	221	261	261	314
AD	118	118	128	128	128	140	140	157	157	170	170	228	228	253
ADS	129	129	139	139	139	150	150	158	158	172	172	228	228	253
L	621	641	652	669	698	699	731	727	777	808	858	876	901	968
LS	688	708	733	750	779	793	825	820	870	920	970	1013	1038	1157
LB	192	212	223	240	269	271	303	298	348	379	429	447	473	539
LBS	260	280	304	321	350	364	396	392	442	491	541	585	610	728

FA77..

42 046 01 14

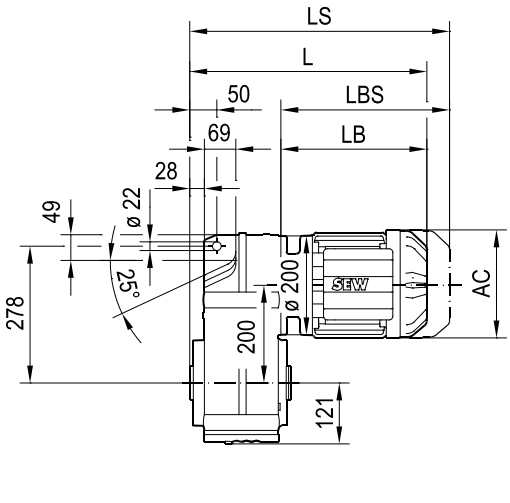

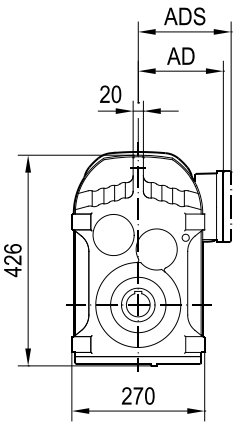

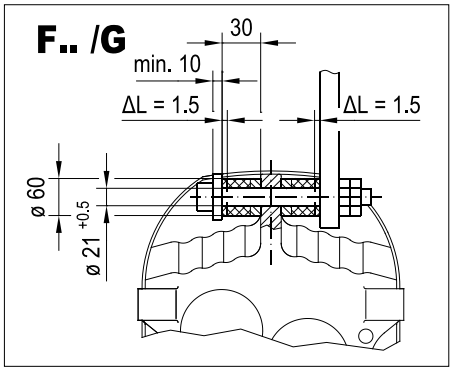

FA77..

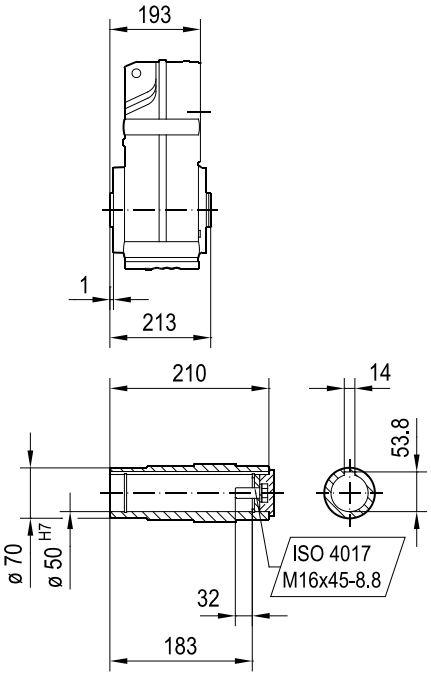

FH77..
max. DRN132L

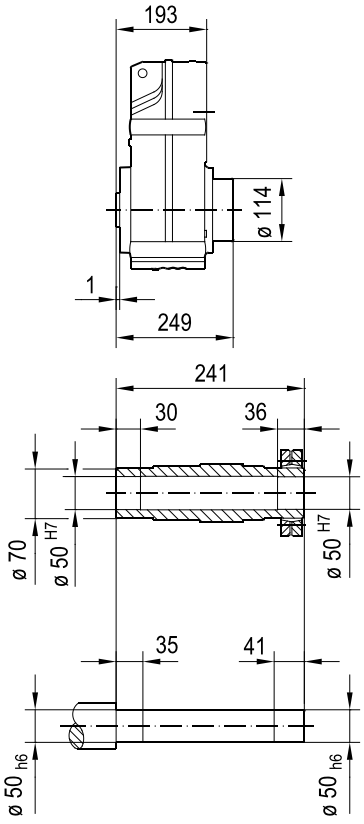

FV77..

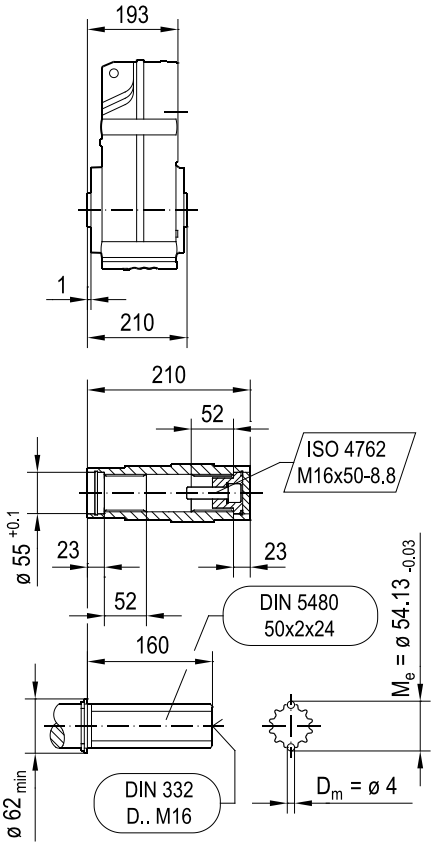

(→ 📖 4.1)	DRN													
	71MS	71M	80MK	80MS	80M	90S	90L	100LS	100L/LM	112M	132S	132M	132L	160..
AC	139	139	156	156	156	179	179	197	197	221	221	261	261	314
AD	118	118	128	128	128	140	140	157	157	170	170	228	228	253
ADS	129	129	139	139	139	150	150	158	158	172	172	228	228	253
L	385	405	416	433	462	464	496	491	541	572	622	640	666	732
LS	453	473	497	514	543	557	589	585	635	684	734	778	803	921
LB	192	212	223	240	269	271	303	298	348	379	429	447	473	539
LBS	260	280	304	321	350	364	396	392	442	491	541	585	610	728

FAZ77..

42 047 00 14

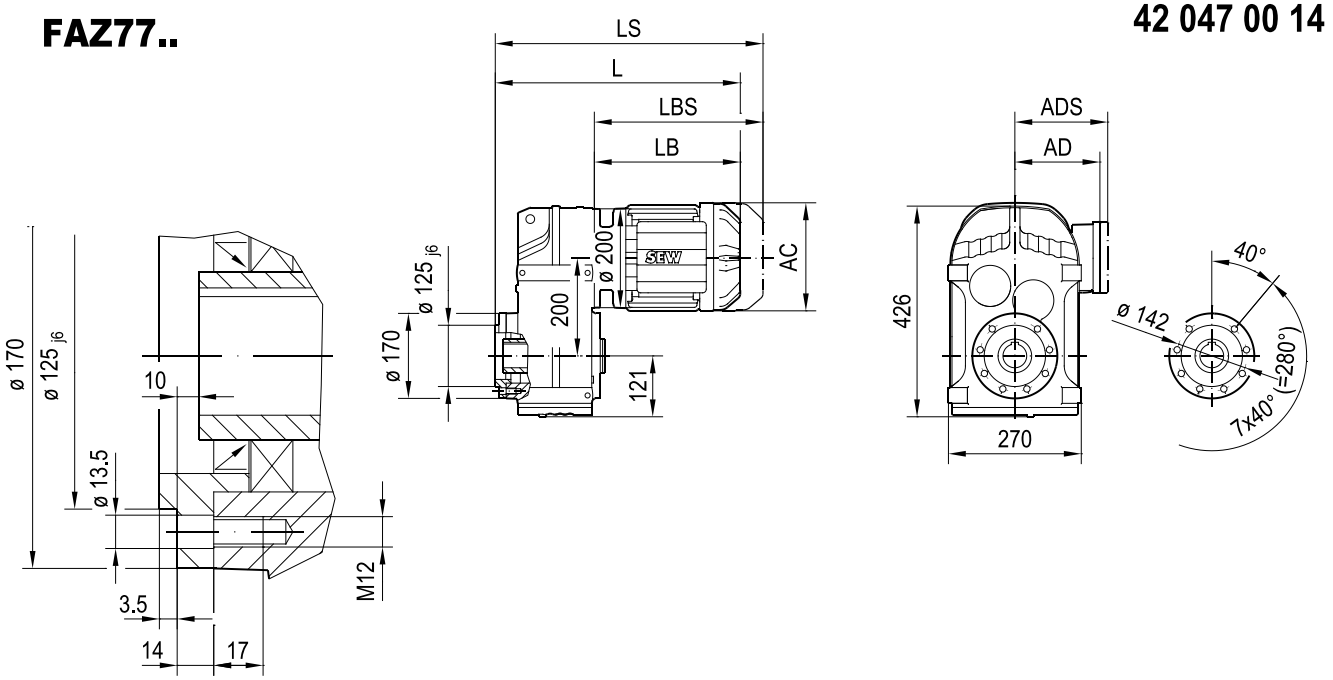

FAZ77..

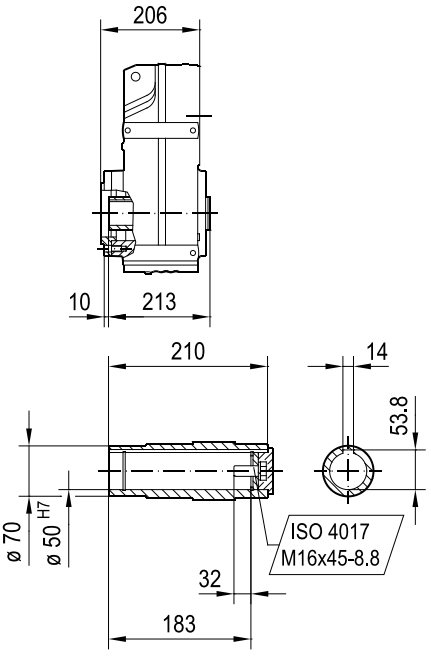

FHZ77..

max. DRN132L

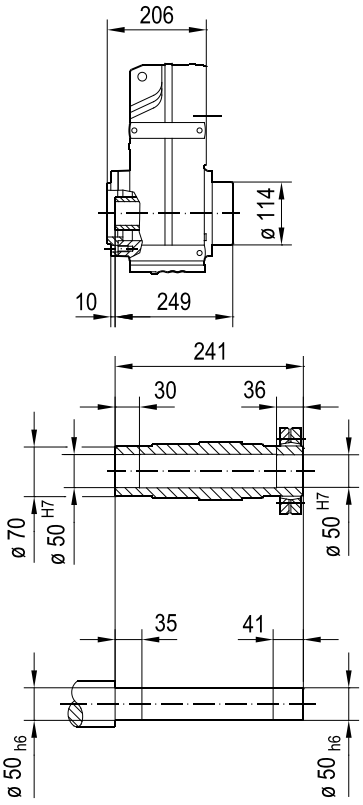

FVZ77..

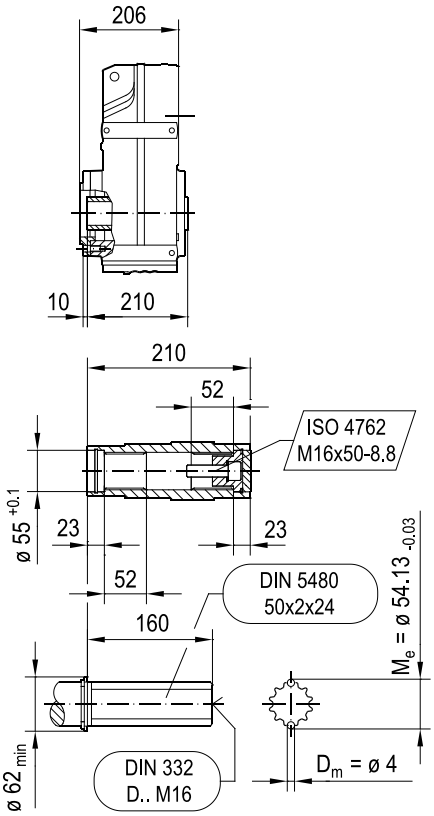

(→ 4.1)	DRN													
	71MS	71M	80MK	80MS	80M	90S	90L	100LS	100L/LM	112M	132S	132M	132L	160..
AC	139	139	156	156	156	179	179	197	197	221	221	261	261	314
AD	118	118	128	128	128	140	140	157	157	170	170	228	228	253
ADS	129	129	139	139	139	150	150	158	158	172	172	228	228	253
L	398	418	429	446	475	477	509	504	554	585	635	653	679	745
LS	466	486	510	527	556	570	602	598	648	697	747	791	816	934
LB	192	212	223	240	269	271	303	298	348	379	429	447	473	539
LBS	260	280	304	321	350	364	396	392	442	491	541	585	610	728

FZ77..

42 076 02 15

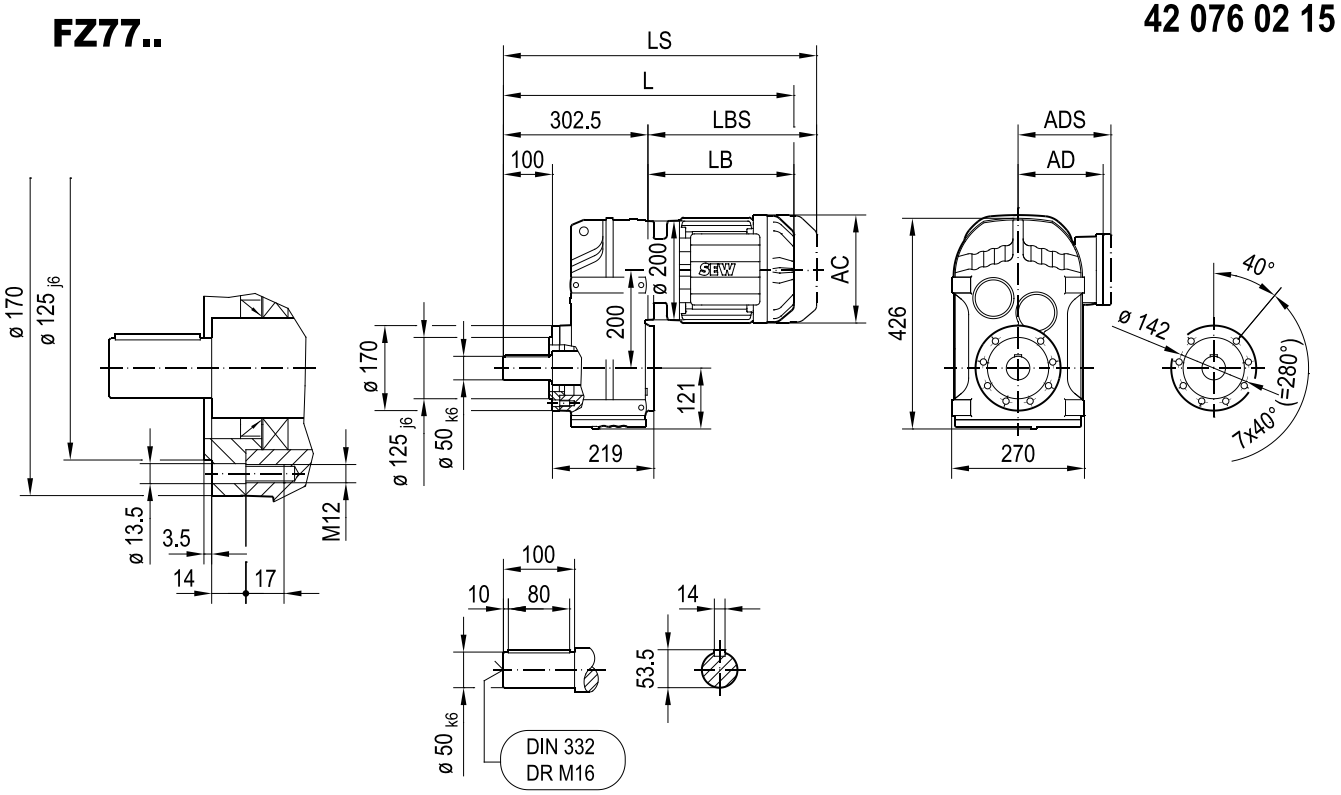

(→ 📖 4.1)	DRN													
	71MS	71M	80MK	80MS	80M	90S	90L	100LS	100L/LM	112M	132S	132M	132L	160..
AC	139	139	156	156	156	179	179	197	197	221	221	261	261	314
AD	118	118	128	128	128	140	140	157	157	170	170	228	228	253
ADS	129	129	139	139	139	150	150	158	158	172	172	228	228	253
L	495	515	526	543	572	573	605	601	651	682	732	750	775	842
LS	562	582	607	624	653	667	699	694	744	794	844	887	912	1031
LB	192	212	223	240	269	271	303	298	348	379	429	447	473	539
LBS	260	280	304	321	350	364	396	392	442	491	541	585	610	728

FT77..

42 048 03 14

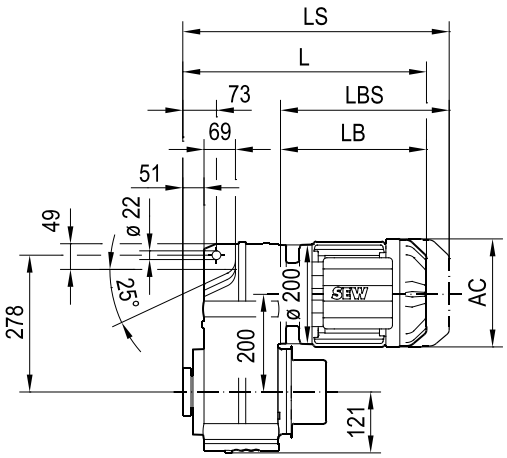

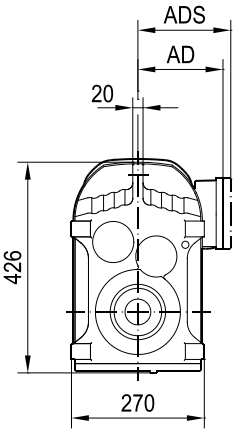

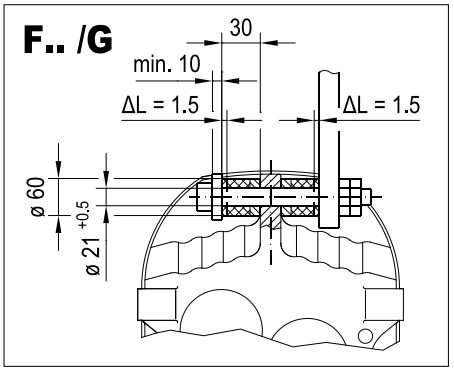

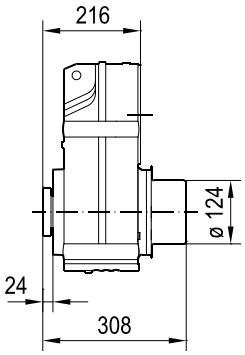

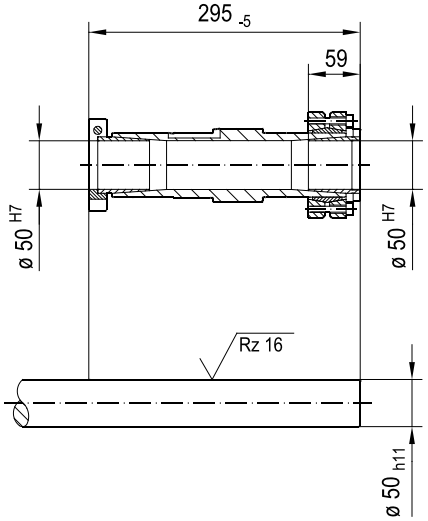

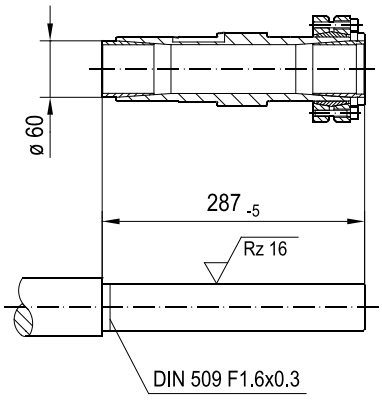

(→ 📖 4.1)	DRN												
	71MS	71M	80MK	80MS	80M	90S	90L	100LS	100L/LM	112M	132S	132M	132L
AC	139	139	156	156	156	179	179	197	197	221	221	261	261
AD	118	118	128	128	128	140	140	157	157	170	170	228	228
ADS	129	129	139	139	139	150	150	158	158	172	172	228	228
L	408	428	439	456	485	487	519	514	564	595	645	663	689
LS	476	496	520	537	566	580	612	608	658	707	757	801	826
LB	192	212	223	240	269	271	303	298	348	379	429	447	473
LBS	260	280	304	321	350	364	396	392	442	491	541	585	610

F87..

42 049 02 14

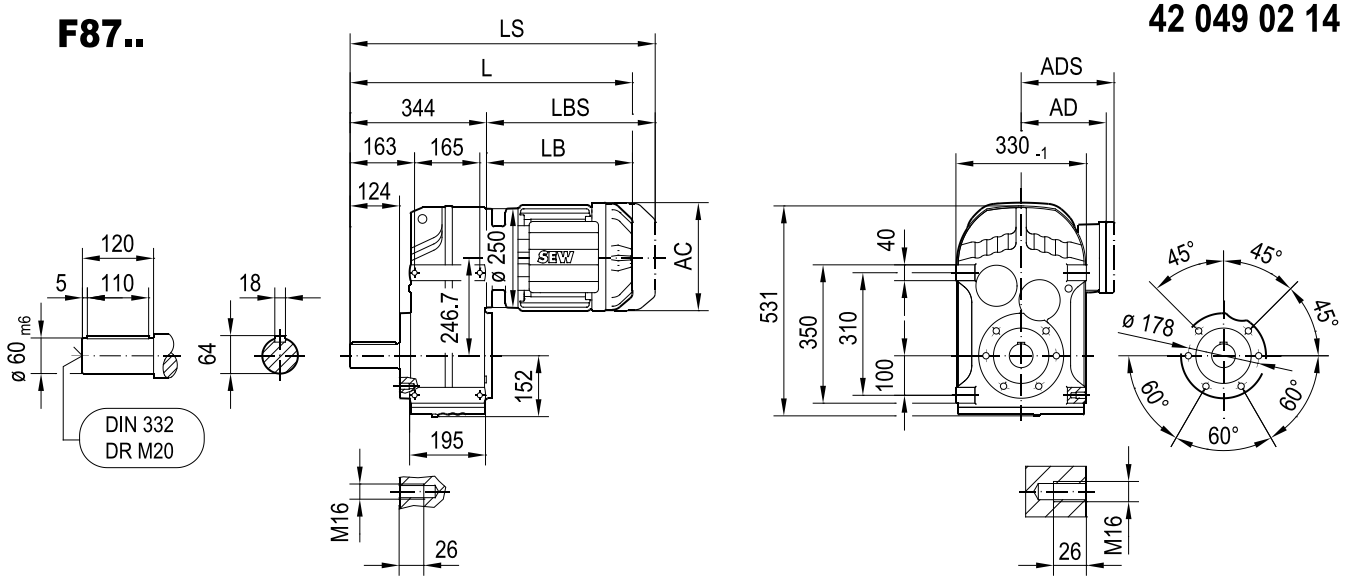

FA87B..

5.6

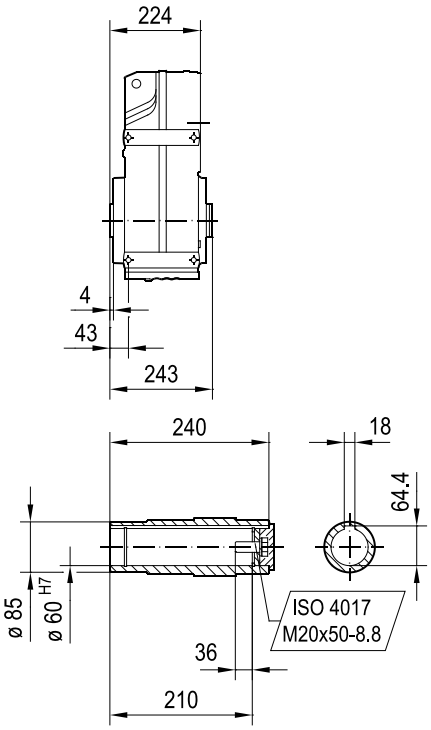

FH87B..

5.6 / 5.7

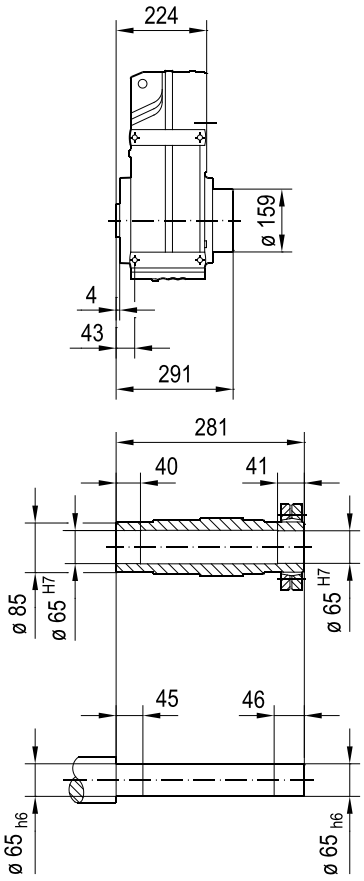

FV87B..

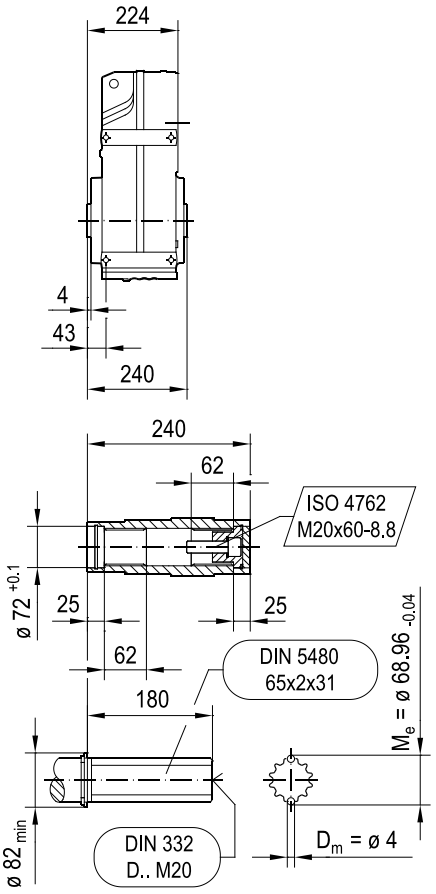

(→ 4.1)	DRN												
	80MK	80M	90S	90L	100LS	100L/LM	112M	132S	132M	132L	160..	180..	200L
AC	156	156	179	179	197	197	221	221	261	261	314	357	394
AD	128	128	140	140	157	157	170	170	228	228	253	268	283
ADS	139	139	150	150	158	158	172	172	228	228	253	268	283
L	562	608	610	642	637	687	718	768	786	812	878	901	1011
LS	643	689	703	735	731	781	830	880	924	949	1067	1090	1216
LB	218	264	266	298	293	343	374	424	442	468	534	557	667
LBS	299	345	359	391	387	437	486	536	580	605	723	746	872

FF87..

42 050 01 14

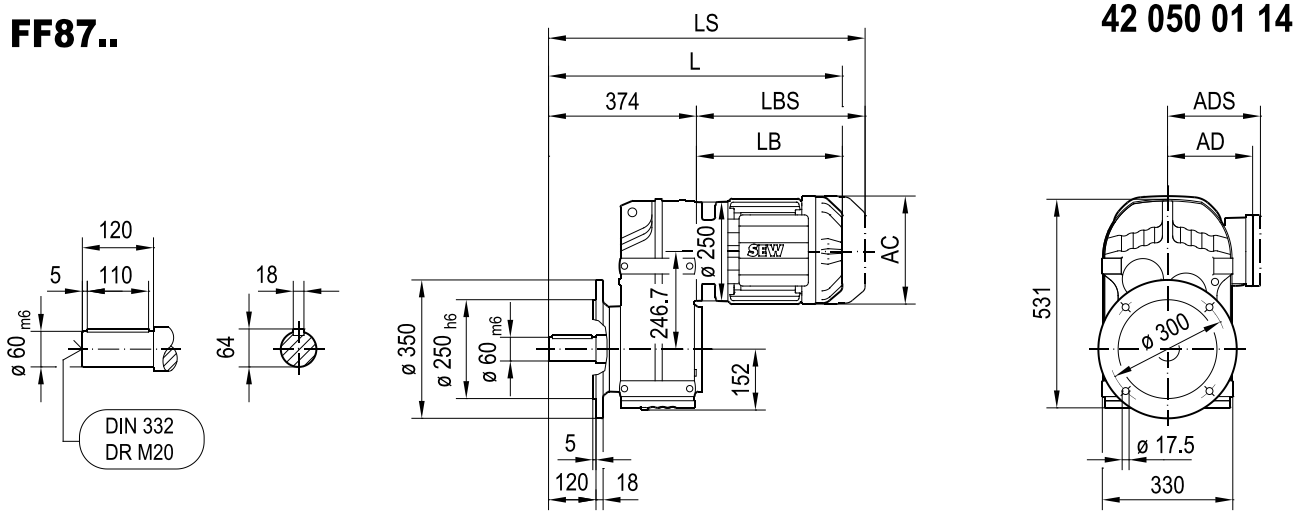

FAF87..

⚠ → 📖 5.6

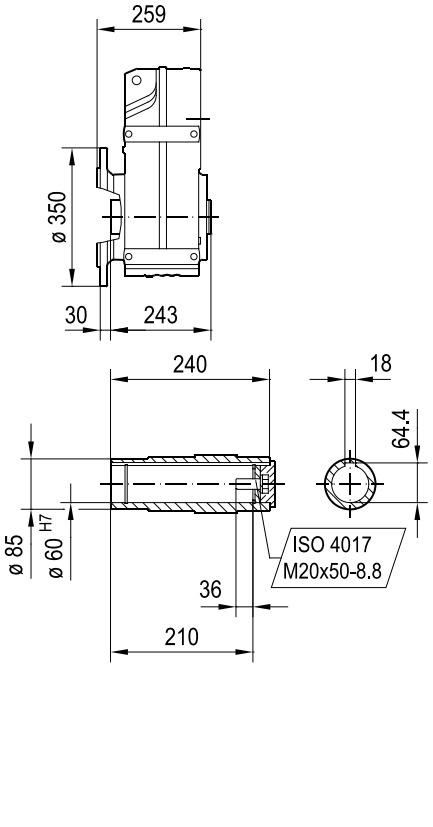

FHF87..

⚠ → 📖 5.6 / 5.7

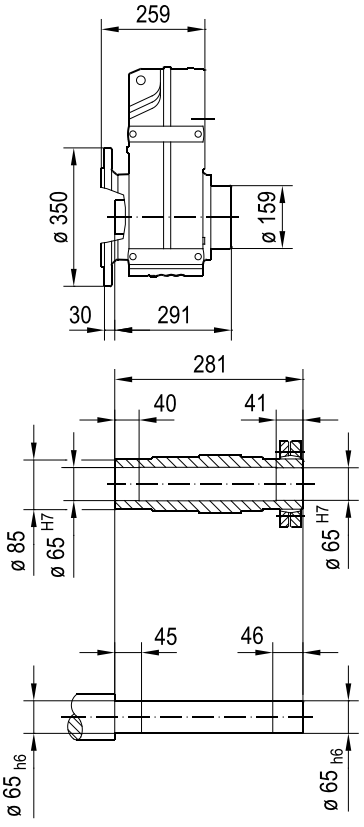

FVF87..

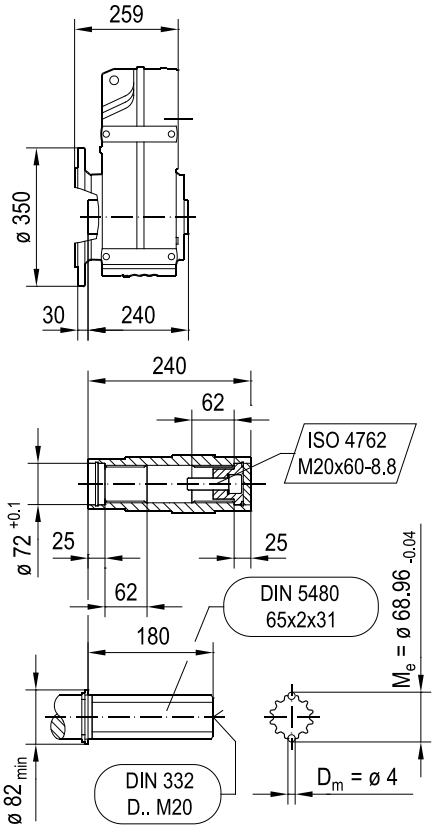

(→ 📖 4.1)	DRN												
	80MK	80M	90S	90L	100LS	100L/LM	112M	132S	132M	132L	160..	180..	200L
AC	156	156	179	179	197	197	221	221	261	261	314	357	394
AD	128	128	140	140	157	157	170	170	228	228	253	268	283
ADS	139	139	150	150	158	158	172	172	228	228	253	268	283
L	592	638	640	672	667	717	748	798	816	842	908	931	1041
LS	673	719	733	765	761	811	860	910	954	979	1097	1120	1246
LB	218	264	266	298	293	343	374	424	442	468	534	557	667
LBS	299	345	359	391	387	437	486	536	580	605	723	746	872

FM87..

42 114 01 17

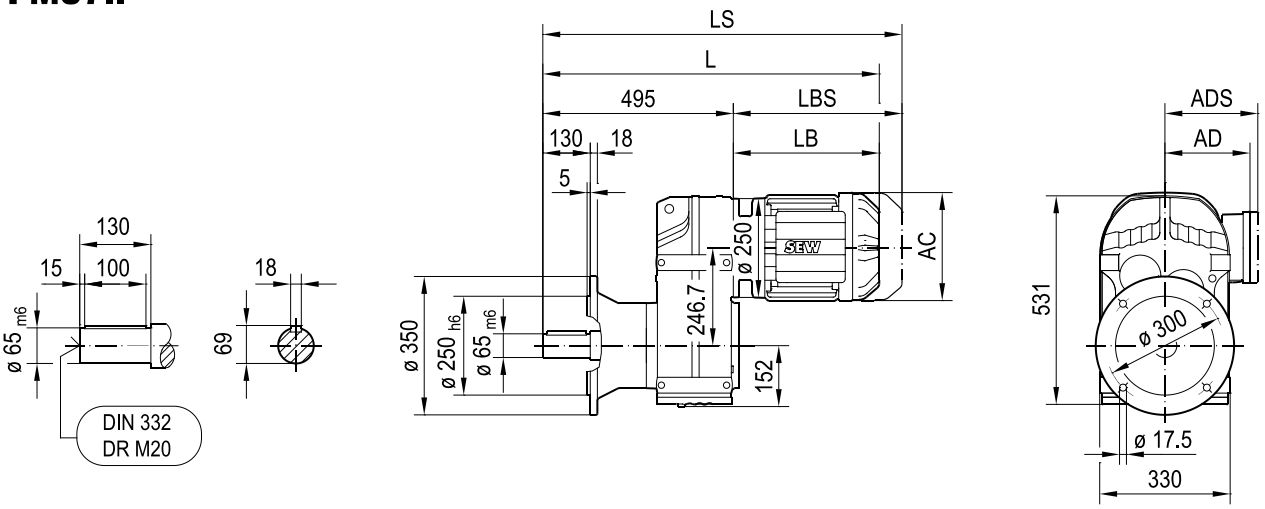

FAM87..

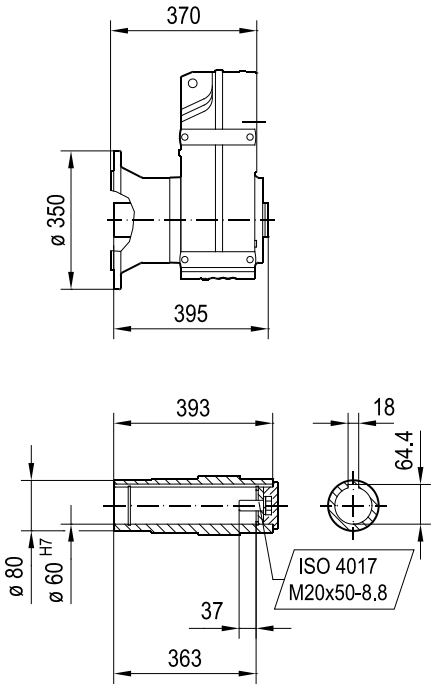

(→ 📖 4.1)	DRN												
	80MK	80M	90S	90L	100LS	100L/LM	112M	132S	132M	132L	160..	180..	200L
AC	156	156	179	179	197	197	221	221	261	261	314	357	394
AD	128	128	140	140	157	157	170	170	228	228	253	268	283
ADS	139	139	150	150	158	158	172	172	228	228	253	268	283
L	713	759	761	793	788	838	869	919	937	963	1029	1052	1162
LS	794	840	854	886	882	932	981	1031	1075	1100	1218	1241	1367
LB	218	264	266	298	293	343	374	424	442	468	534	557	667
LBS	299	345	359	391	387	437	486	536	580	605	723	746	872

FA87..

42 051 02 14

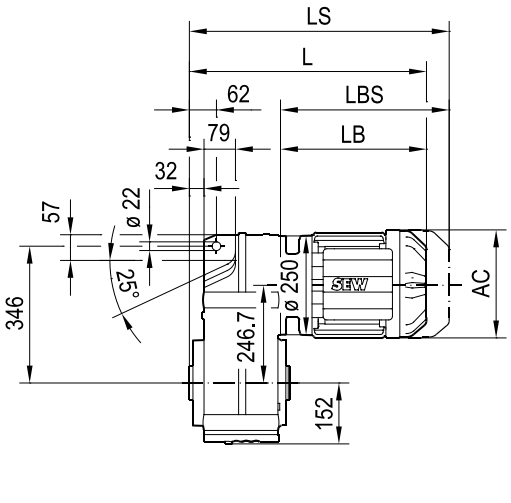

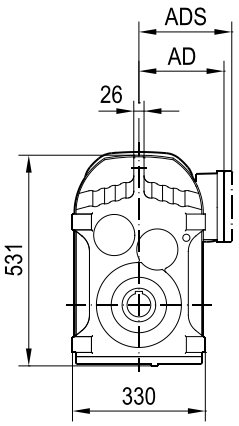

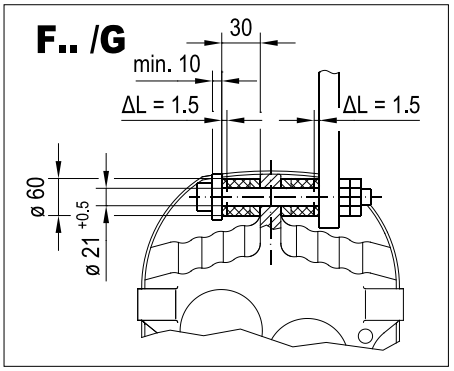

FA87..

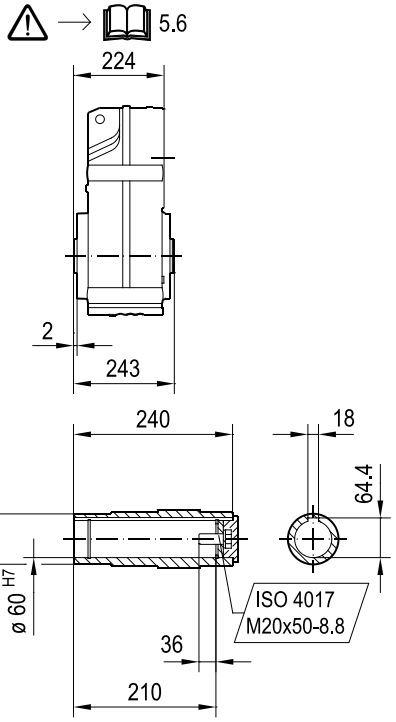

FH87..

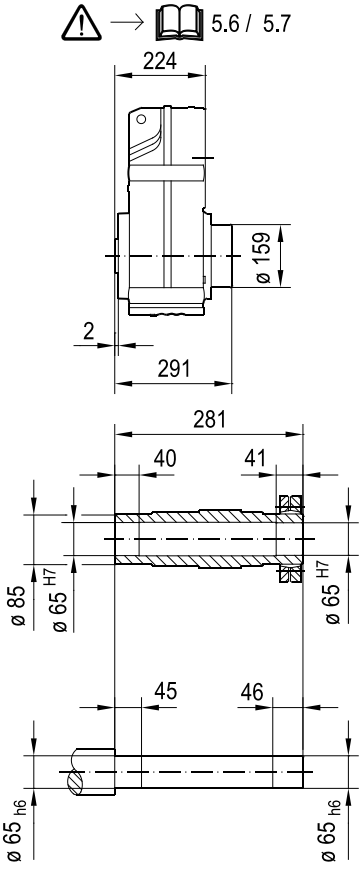

FV87..

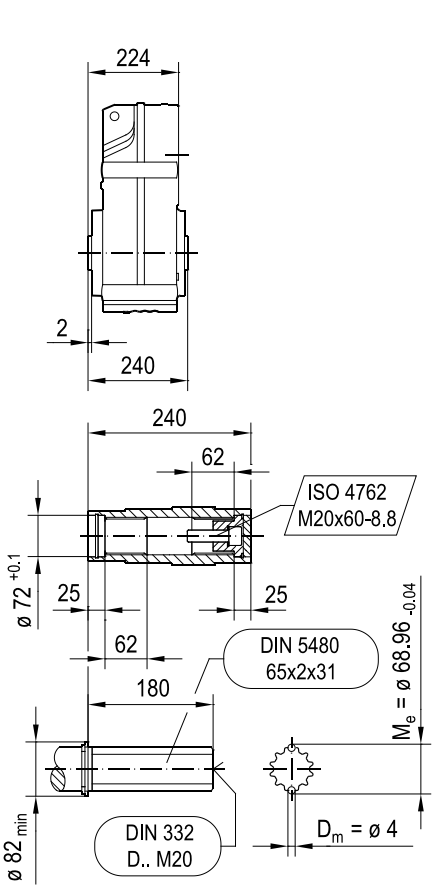

(→ 4.1)	DRN												
	80MK	80M	90S	90L	100LS	100L/LM	112M	132S	132M	132L	160..	180..	200L
AC	156	156	179	179	197	197	221	221	261	261	314	357	394
AD	128	128	140	140	157	157	170	170	228	228	253	268	283
ADS	139	139	150	150	158	158	172	172	228	228	253	268	283
L	442	488	490	522	517	567	598	648	666	692	758	781	891
LS	523	569	583	615	611	661	710	760	804	829	947	970	1096
LB	218	264	266	298	293	343	374	424	442	468	534	557	667
LBS	299	345	359	391	387	437	486	536	580	605	723	746	872

FAZ87..

42 052 01 14

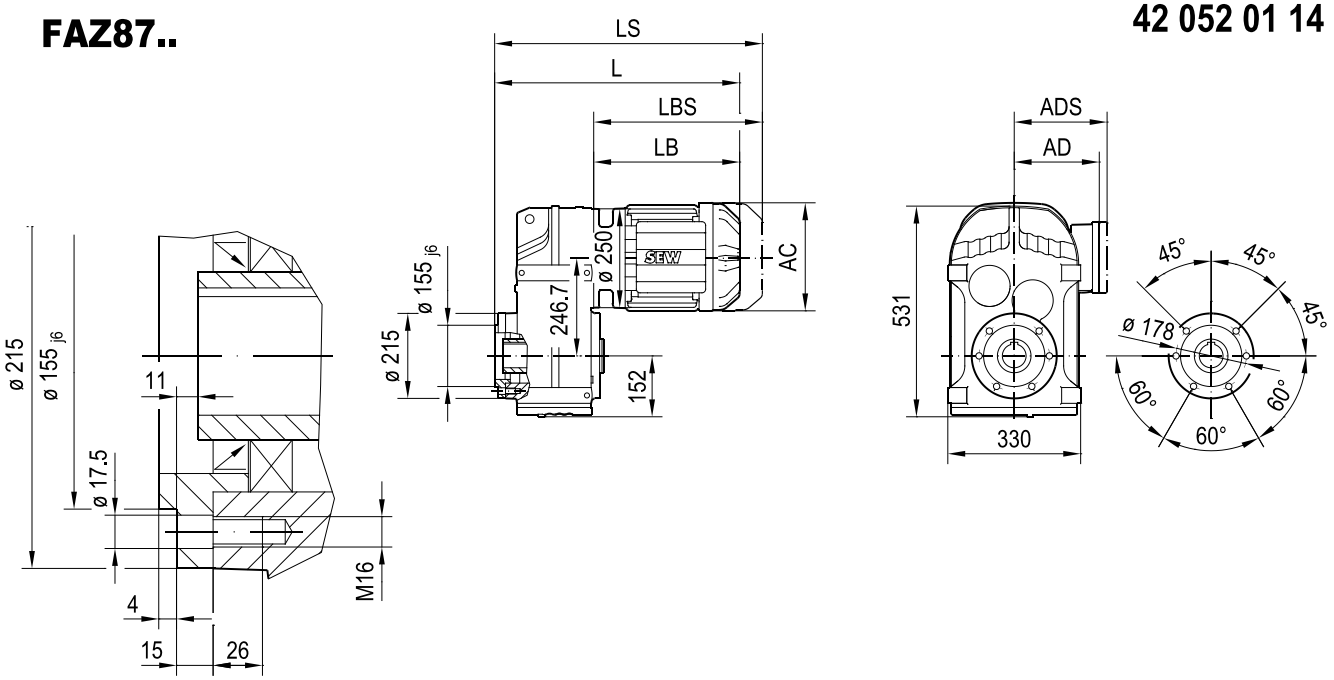

FAZ87..

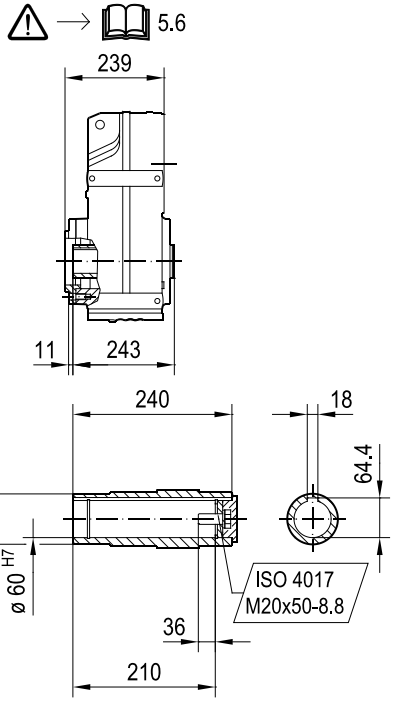

FHZ87..

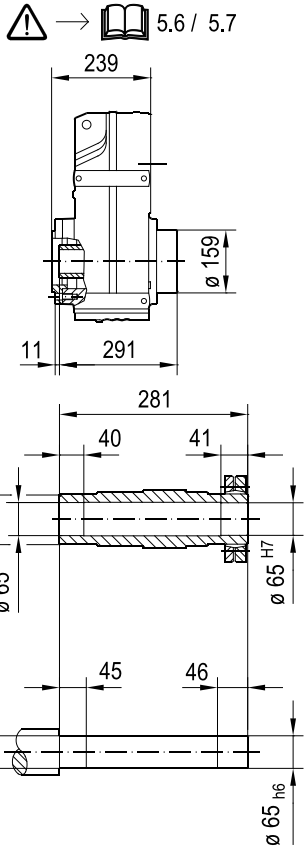

FVZ87..

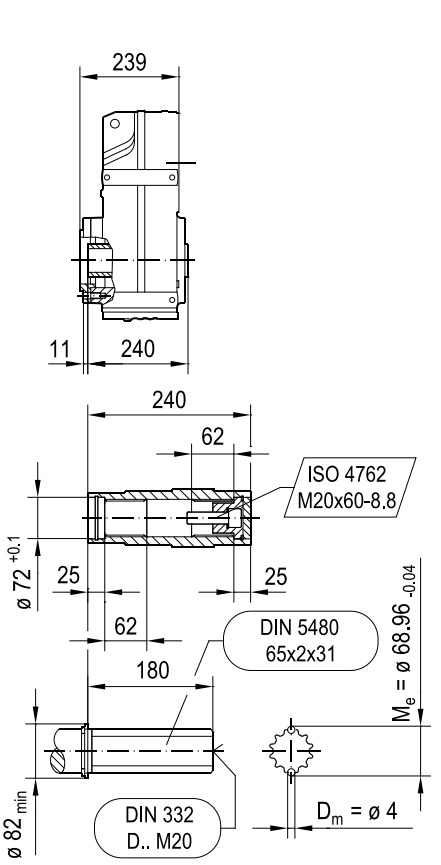

(→ 📖 4.1)	DRN												
	80MK	80M	90S	90L	100LS	100L/LM	112M	132S	132M	132L	160..	180..	200L
AC	156	156	179	179	197	197	221	221	261	261	314	357	394
AD	128	128	140	140	157	157	170	170	228	228	253	268	283
ADS	139	139	150	150	158	158	172	172	228	228	253	268	283
L	457	503	505	537	532	582	613	663	681	707	773	796	906
LS	538	584	598	630	626	676	725	775	819	844	962	985	1111
LB	218	264	266	298	293	343	374	424	442	468	534	557	667
LBS	299	345	359	391	387	437	486	536	580	605	723	746	872

FZ87..

42 077 02 15

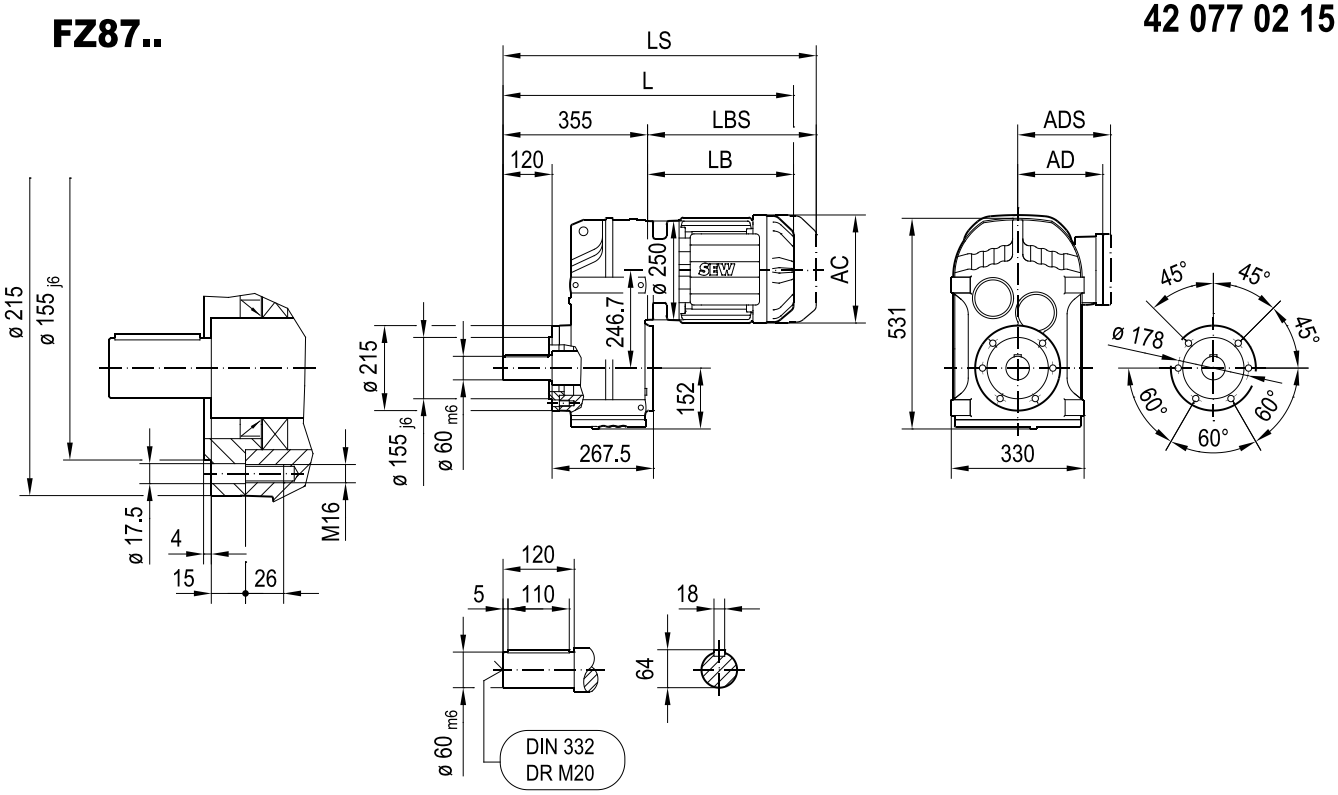

(→ 📖 4.1)	DRN												
	80MK	80M	90S	90L	100LS	100L/LM	112M	132S	132M	132L	160..	180..	200L
AC	156	156	179	179	197	197	221	221	261	261	314	357	394
AD	128	128	140	140	157	157	170	170	228	228	253	268	283
ADS	139	139	150	150	158	158	172	172	228	228	253	268	283
L	573	619	621	653	648	698	729	779	797	823	889	912	1022
LS	654	700	714	746	742	792	841	891	935	960	1078	1101	1227
LB	218	264	266	298	293	343	374	424	442	468	534	557	667
LBS	299	345	359	391	387	437	486	536	580	605	723	746	872

FT87..

42 053 03 14

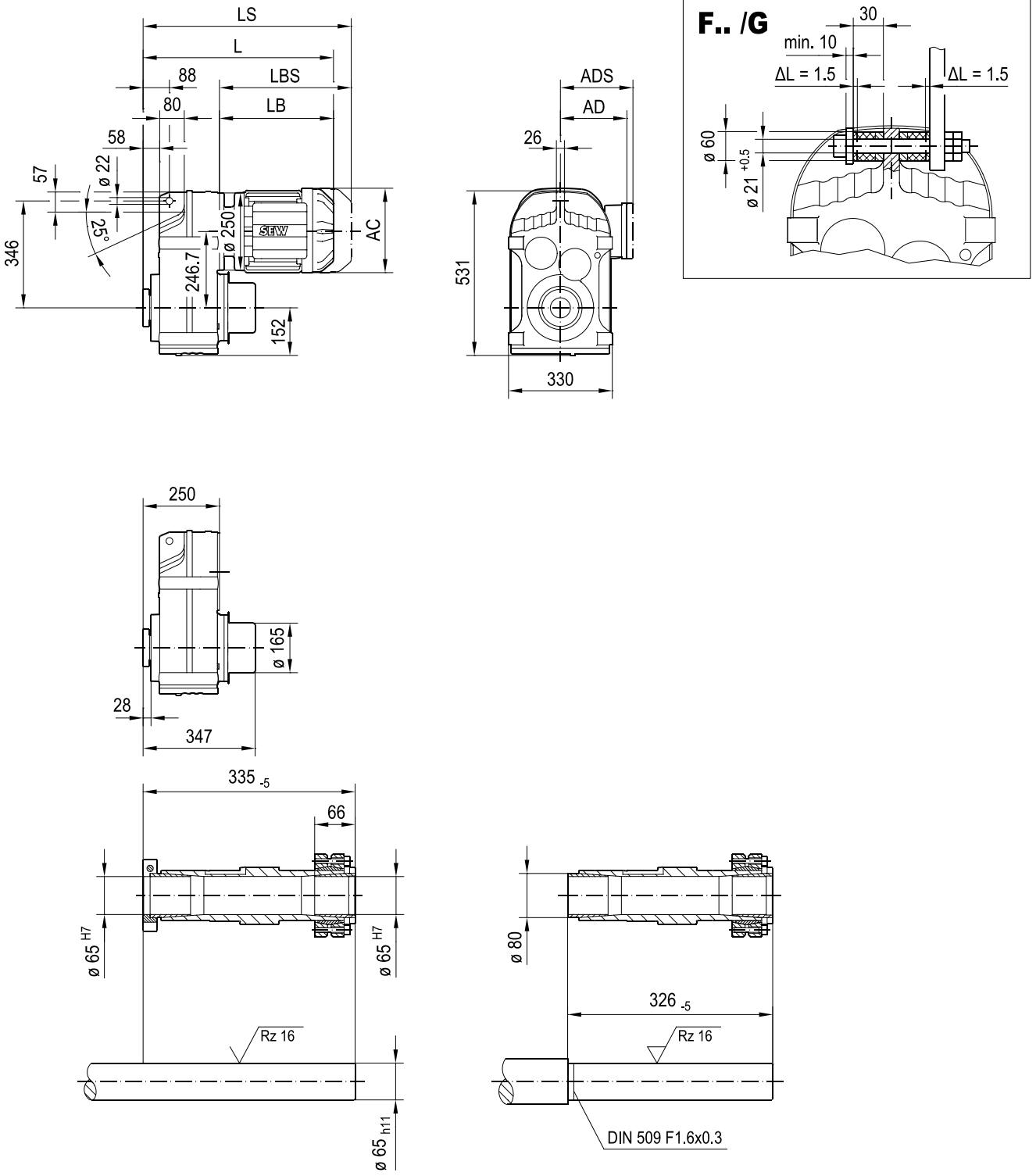

(→ 📖 4.1)	DRN												
	80MK	80M	90S	90L	100LS	100L/LM	112M	132S	132M	132L	160..	180..	200L
AC	156	156	179	179	197	197	221	221	261	261	314	357	394
AD	128	128	140	140	157	157	170	170	228	228	253	268	283
ADS	139	139	150	150	158	158	172	172	228	228	253	268	283
L	468	514	516	548	543	593	624	674	692	718	784	807	917
LS	549	595	609	641	637	687	736	786	830	855	973	996	1122
LB	218	264	266	298	293	343	374	424	442	468	534	557	667
LBS	299	345	359	391	387	437	486	536	580	605	723	746	872

F97..

42 054 02 14

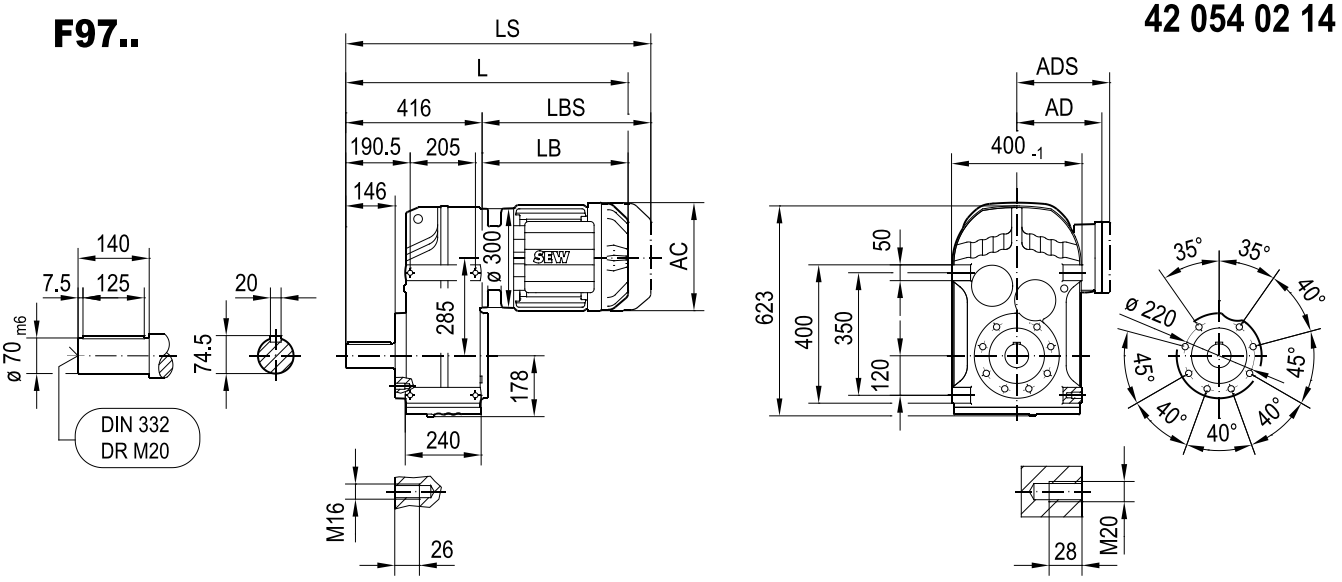

FA97B..

⚠ → 📖 5.6

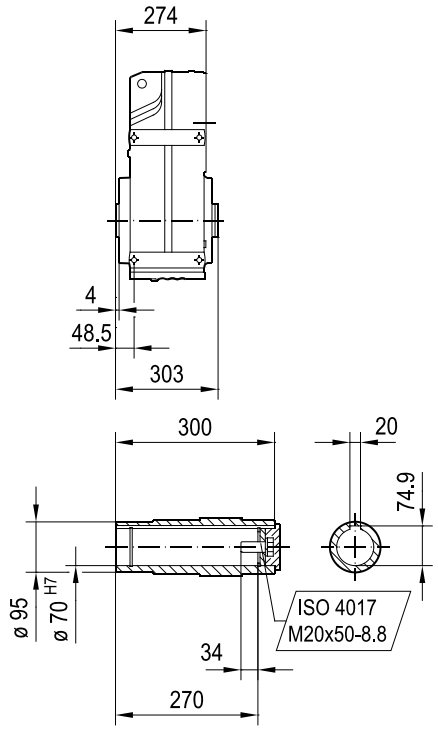

FH97B..

⚠ → 📖 5.6 / 5.7

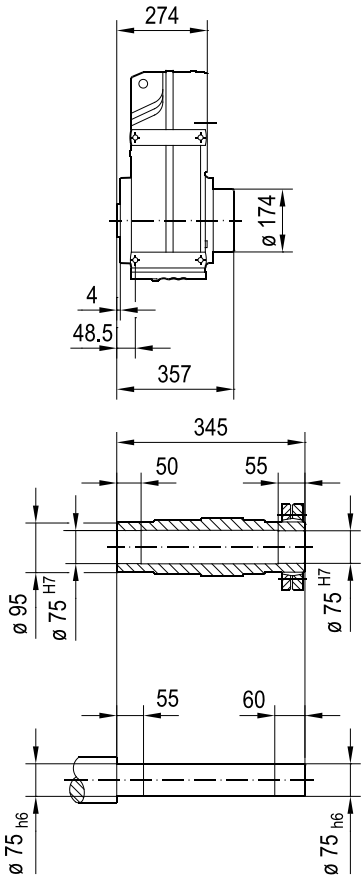

FV97B..

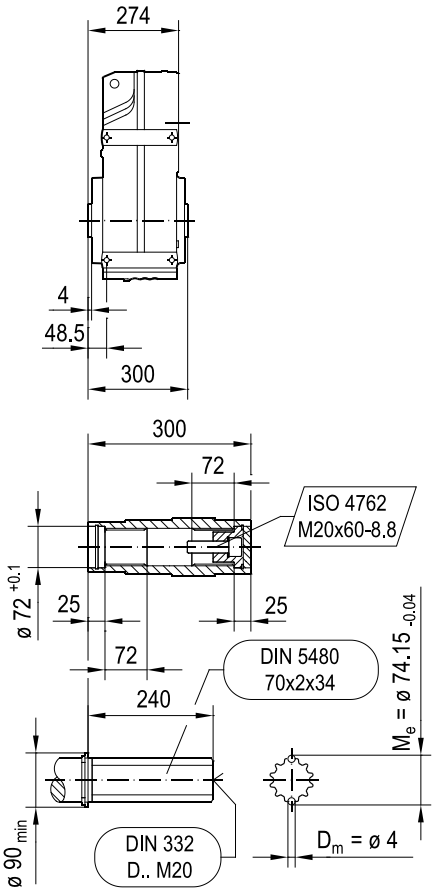

(→ 📖 4.1)	DRN												
	80M	90S	90L	100LS	100L/LM	112M	132S	132M	132L	160..	180..	200L	225..
AC	156	179	179	197	197	221	221	261	261	314	357	394	434
AD	128	140	140	157	157	170	170	228	228	253	268	283	305
ADS	139	150	150	158	158	172	172	228	228	253	268	283	305
L	675	677	709	704	754	785	835	853	879	945	968	1078	1052
LS	756	770	802	798	848	897	947	991	1016	1134	1157	1283	1257
LB	259	261	293	288	338	369	419	437	463	529	552	662	636
LBS	340	354	386	382	432	481	531	575	600	718	741	867	841

FF97..

42 055 01 14

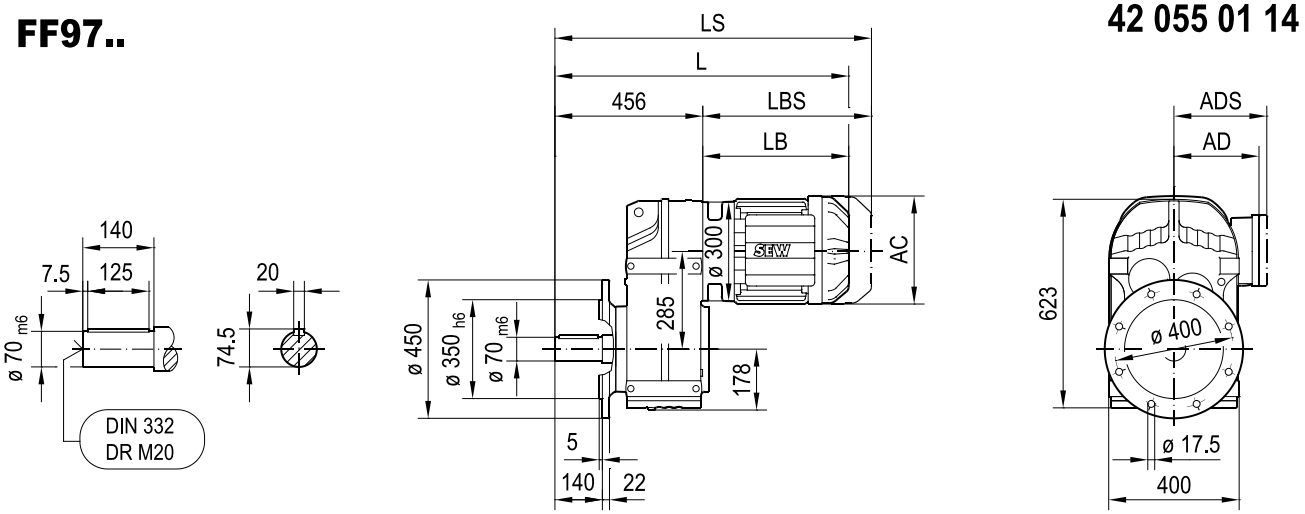

FAF97..

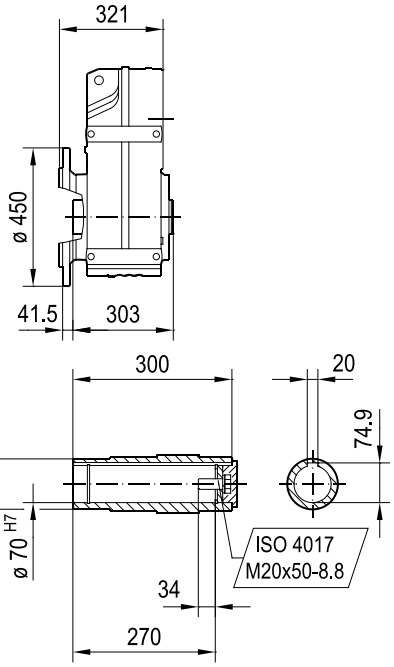

FHF97..

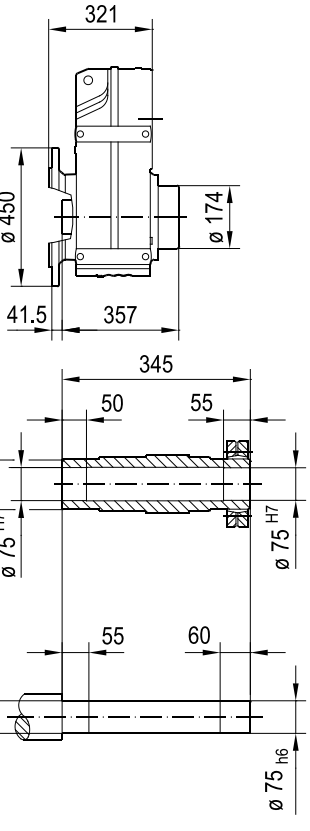

FVF97..

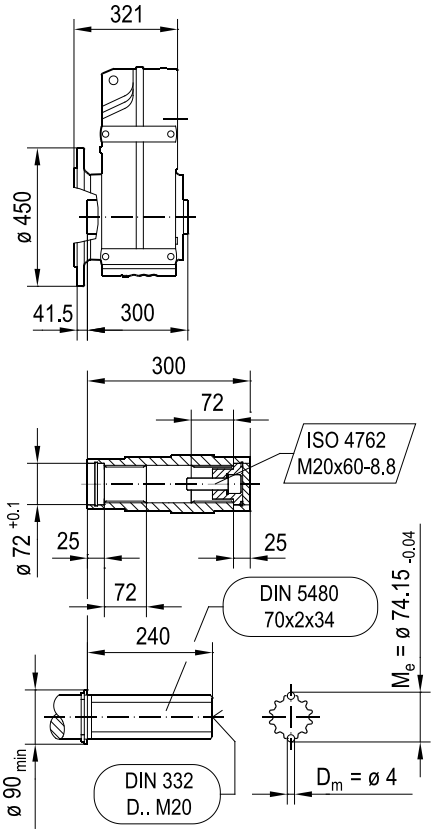

(→ 📖 4.1)	DRN												
	80M	90S	90L	100LS	100L/LM	112M	132S	132M	132L	160..	180..	200L	225..
AC	156	179	179	197	197	221	221	261	261	314	357	394	434
AD	128	140	140	157	157	170	170	228	228	253	268	283	305
ADS	139	150	150	158	158	172	172	228	228	253	268	283	305
L	715	717	749	744	794	825	875	893	919	985	1008	1118	1092
LS	796	810	842	838	888	937	987	1031	1056	1174	1197	1323	1297
LB	259	261	293	288	338	369	419	437	463	529	552	662	636
LBS	340	354	386	382	432	481	531	575	600	718	741	867	841

FM97..

42 115 00 17

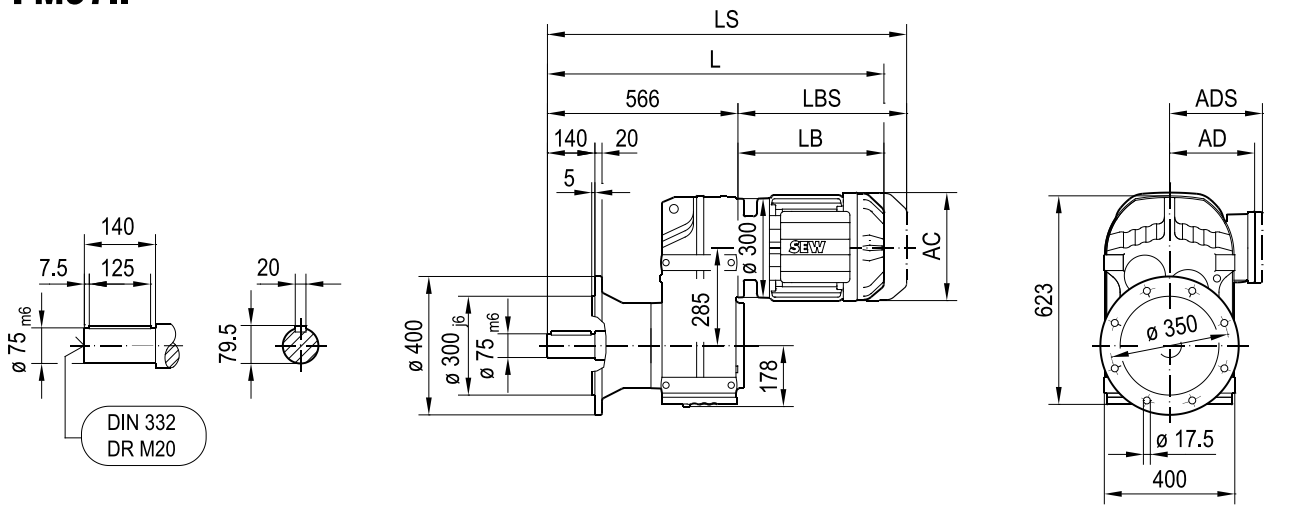

FAM97..

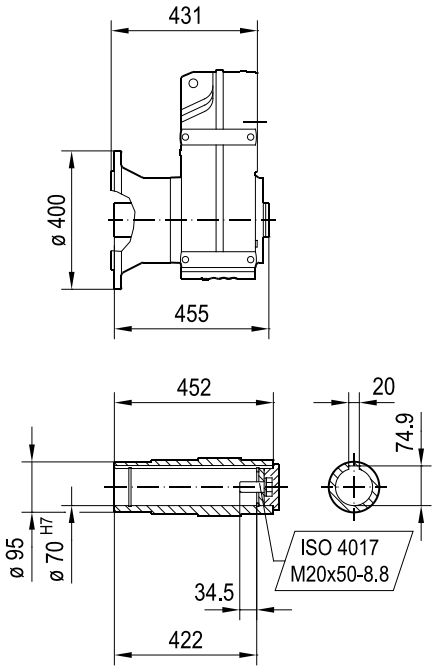

(→ 📖 4.1)	DRN												
	80M	90S	90L	100LS	100L/LM	112M	132S	132M	132L	160..	180..	200L	225..
AC	156	179	179	197	197	221	221	261	261	314	357	394	434
AD	128	140	140	157	157	170	170	228	228	253	268	283	305
ADS	139	150	150	158	158	172	172	228	228	253	268	283	305
L	825	827	859	854	904	935	985	1003	1029	1095	1118	1228	1202
LS	906	920	952	948	998	1047	1097	1141	1166	1284	1307	1433	1407
LB	259	261	293	288	338	369	419	437	463	529	552	662	636
LBS	340	354	386	382	432	481	531	575	600	718	741	867	841

FA97..

42 056 02 14

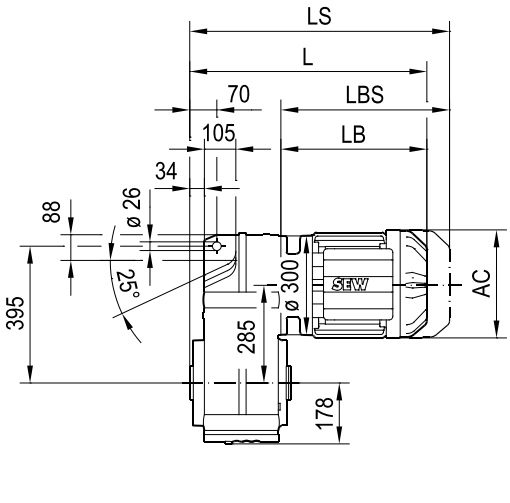

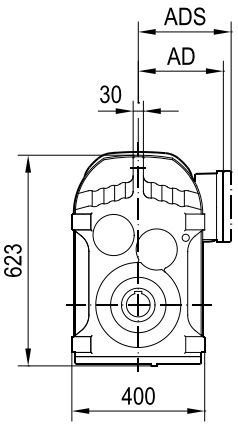

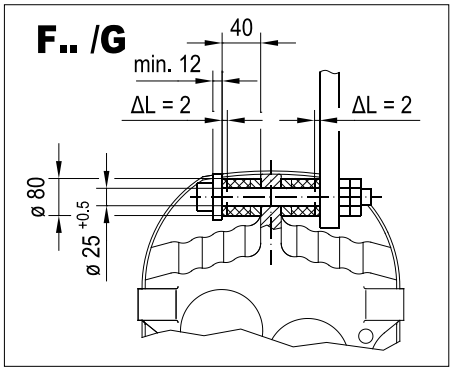

FA97..

⚠ → 📖 5.6

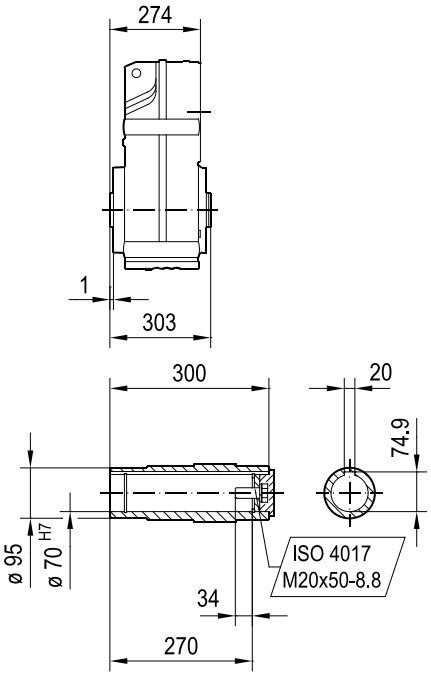

FH97..

⚠ → 📖 5.6 / 5.7

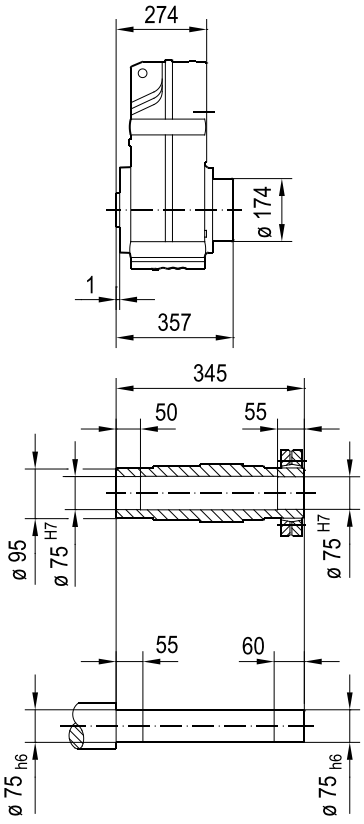

FV97..

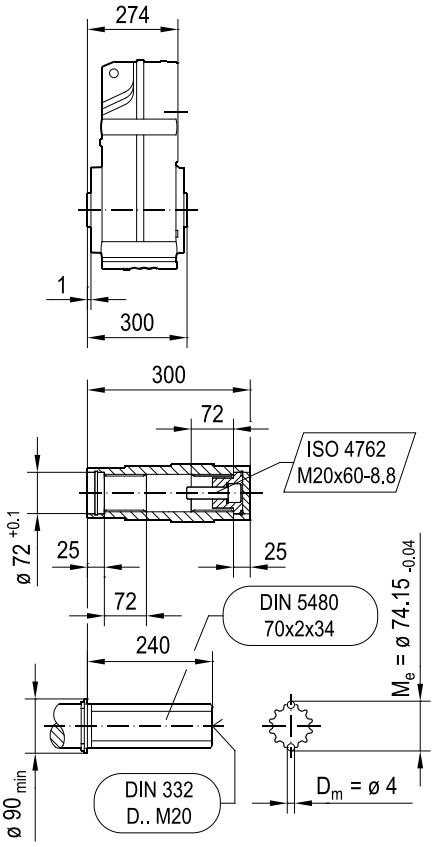

(→ 📖 4.1)	DRN												
	80M	90S	90L	100LS	100L/LM	112M	132S	132M	132L	160..	180..	200L	225..
AC	156	179	179	197	197	221	221	261	261	314	357	394	434
AD	128	140	140	157	157	170	170	228	228	253	268	283	305
ADS	139	150	150	158	158	172	172	228	228	253	268	283	305
L	533	535	567	562	612	643	693	711	737	803	826	936	910
LS	614	628	660	656	706	755	805	849	874	992	1015	1141	1115
LB	259	261	293	288	338	369	419	437	463	529	552	662	636
LBS	340	354	386	382	432	481	531	575	600	718	741	867	841

FAZ97..

42 057 01 14

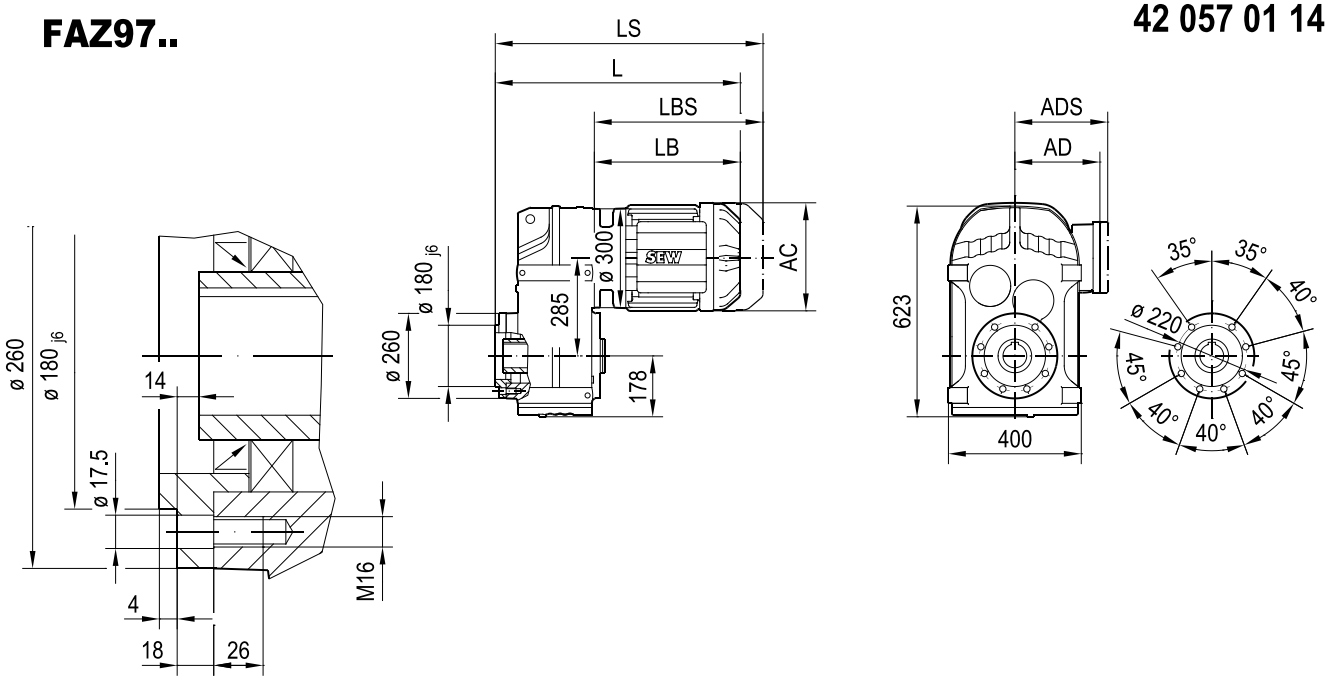

FAZ97..

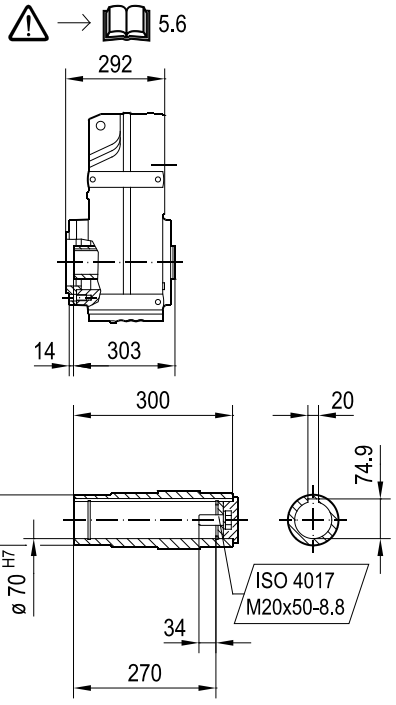

FHZ97..

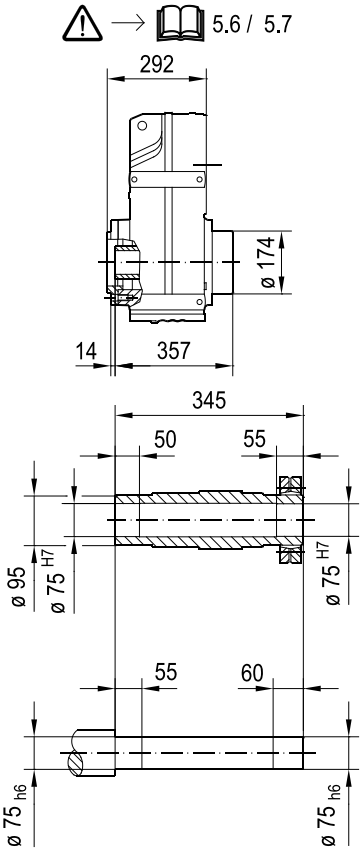

FVZ97..

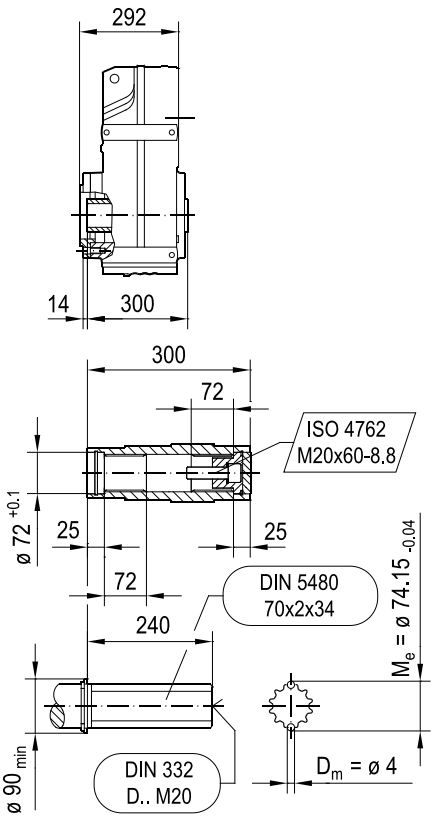

(→ 4.1)	DRN												
	80M	90S	90L	100LS	100L/LM	112M	132S	132M	132L	160..	180..	200L	225..
AC	156	179	179	197	197	221	221	261	261	314	357	394	434
AD	128	140	140	157	157	170	170	228	228	253	268	283	305
ADS	139	150	150	158	158	172	172	228	228	253	268	283	305
L	551	553	585	580	630	661	711	729	755	821	844	954	928
LS	632	646	678	674	724	773	823	867	892	1010	1033	1159	1133
LB	259	261	293	288	338	369	419	437	463	529	552	662	636
LBS	340	354	386	382	432	481	531	575	600	718	741	867	841

FZ97..

42 078 03 15

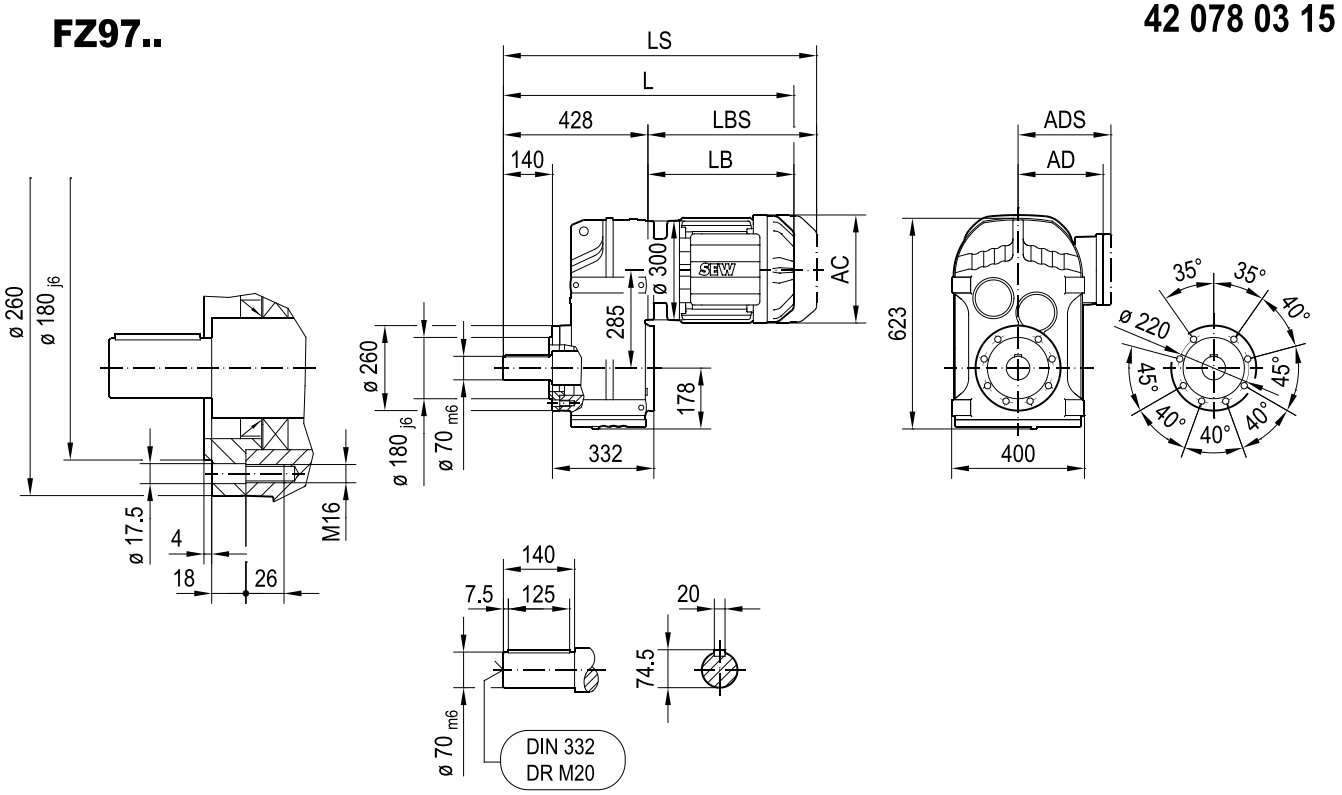

(→ 📖 4.1)	DRN												
	80M	90S	90L	100LS	100L/LM	112M	132S	132M	132L	160..	180..	200L	225..
AC	156	179	179	197	197	221	221	261	261	314	357	394	434
AD	128	140	140	157	157	170	170	228	228	253	268	283	305
ADS	139	150	150	158	158	172	172	228	228	253	268	283	305
L	687	689	721	716	766	797	847	865	891	957	980	1090	1064
LS	768	782	814	810	860	909	959	1003	1028	1146	1169	1295	1269
LB	259	261	293	288	338	369	419	437	463	529	552	662	636
LBS	340	354	386	382	432	481	531	575	600	718	741	867	841

FT97..

42 058 03 14

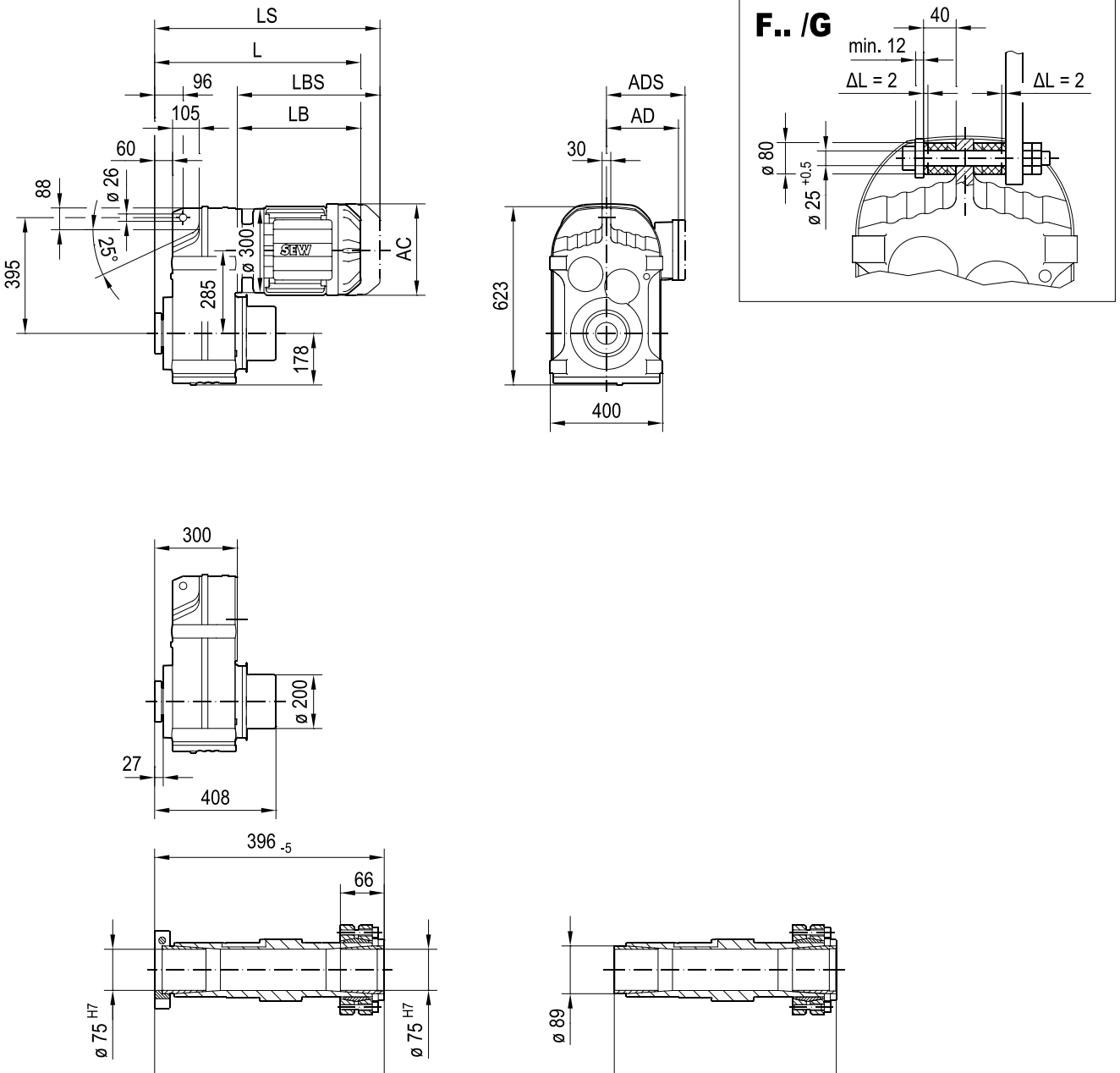

(→ 📖 4.1)	DRN										
	80M	90S	90L	100LS	100L/LM	112M	132S	132M	132L	160..	180..
AC	156	179	179	197	197	221	221	261	261	314	357
AD	128	140	140	157	157	170	170	228	228	253	268
ADS	139	150	150	158	158	172	172	228	228	253	268
L	559	561	593	588	638	669	719	737	763	829	852
LS	640	654	686	682	732	781	831	875	900	1018	1041
LB	259	261	293	288	338	369	419	437	463	529	552
LBS	340	354	386	382	432	481	531	575	600	718	741

F107..

42 059 01 14

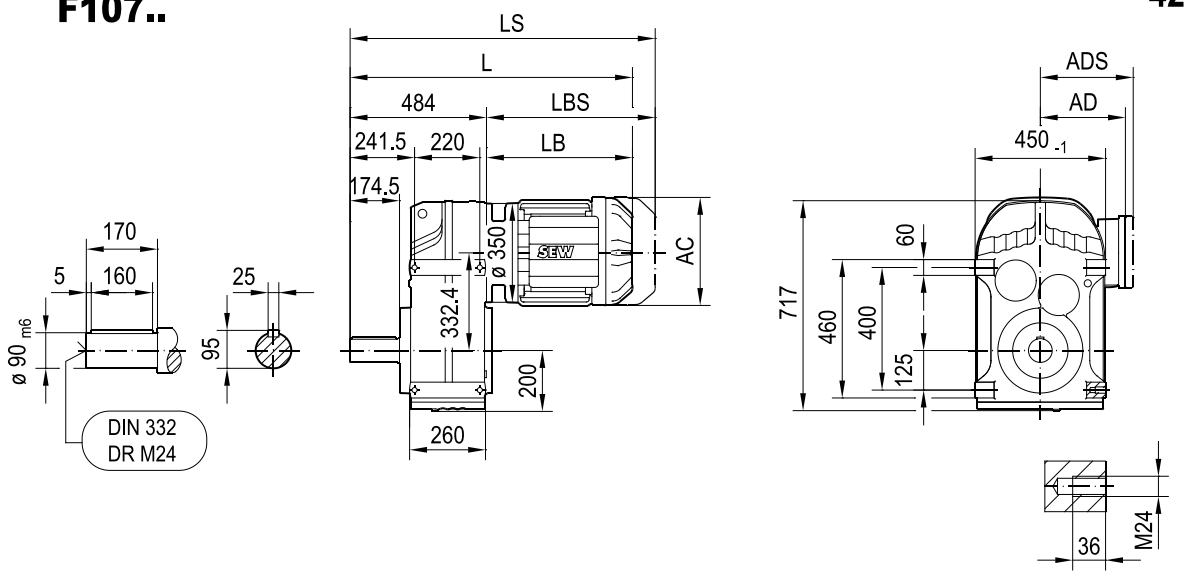

FA107B..

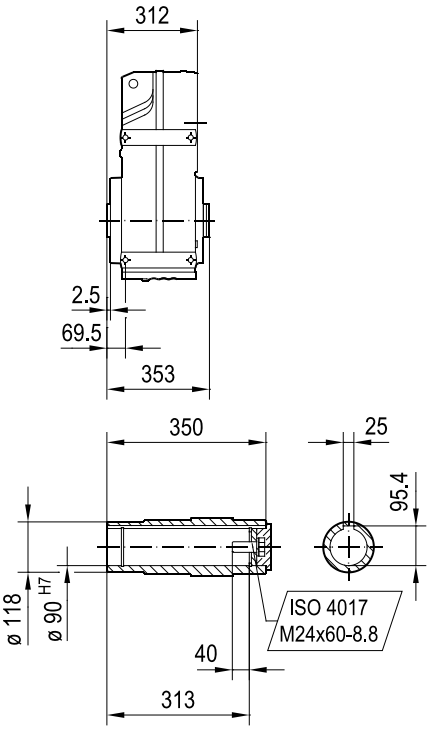

FH107B..

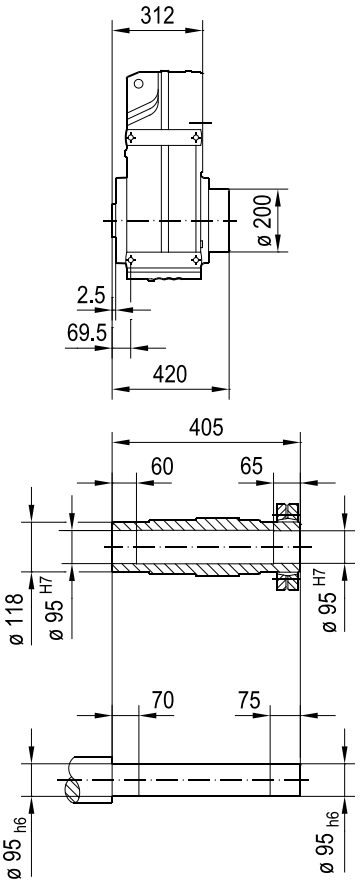

FV107B..

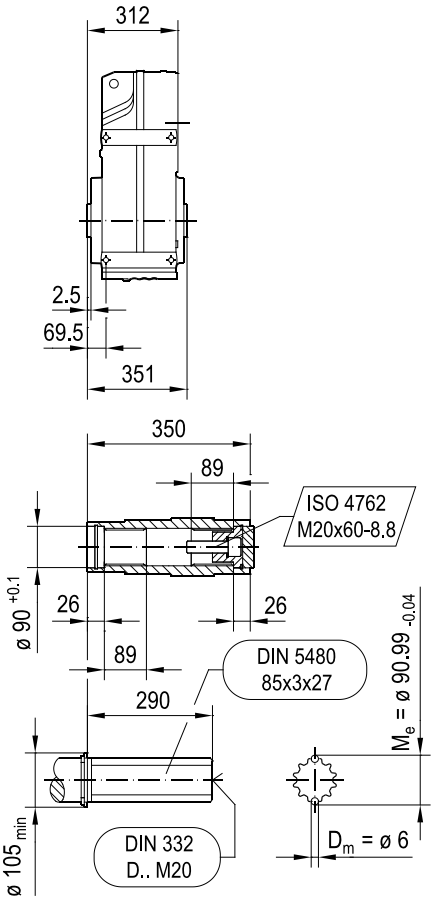

(→ 📖 4.1)	DRN										
	100LS	100L/LM	112M	132S	132M	132L	160..	180..	200L	225..	250M
AC	197	197	221	221	261	261	314	357	394	434	495
AD	157	157	170	170	228	228	253	268	283	305	394
ADS	158	158	172	172	228	228	253	268	283	305	394
L	766	816	847	897	915	941	1007	1030	1140	1114	1251
LS	860	910	959	1009	1053	1078	1196	1219	1345	1319	1491
LB	282	332	363	413	431	457	523	546	656	630	767
LBS	376	426	475	525	569	594	712	735	861	835	1007

FF107..

42 060 00 14

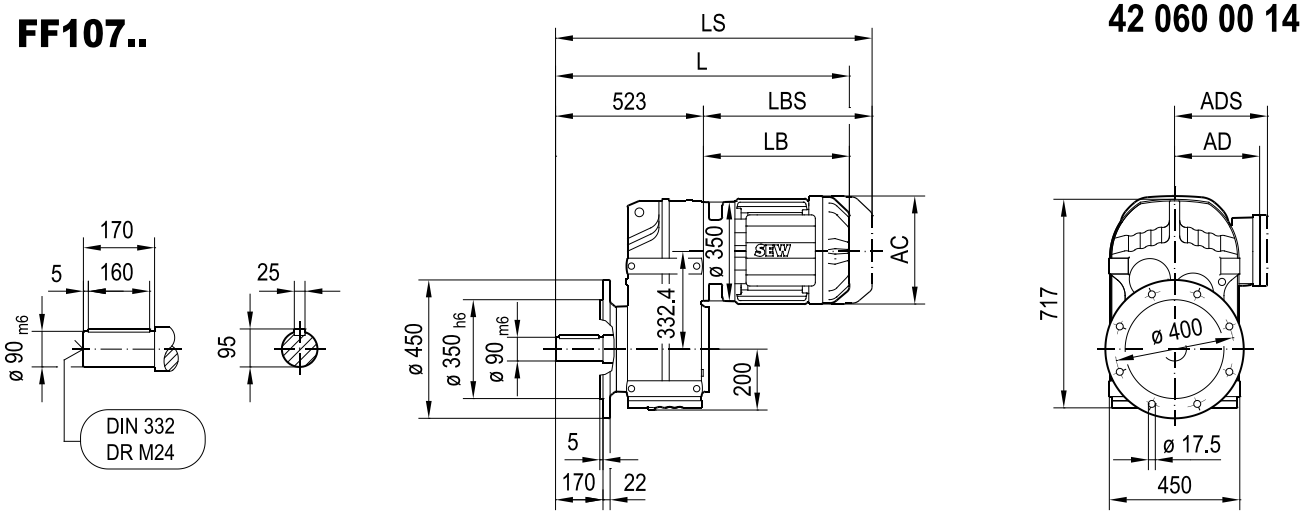

FAF107..

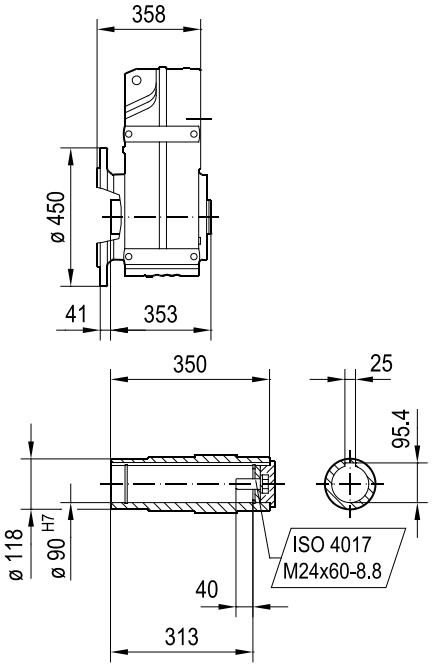

FHF107..

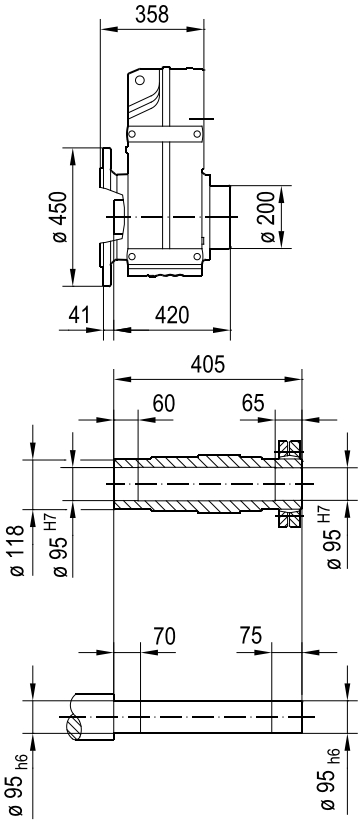

FVF107..

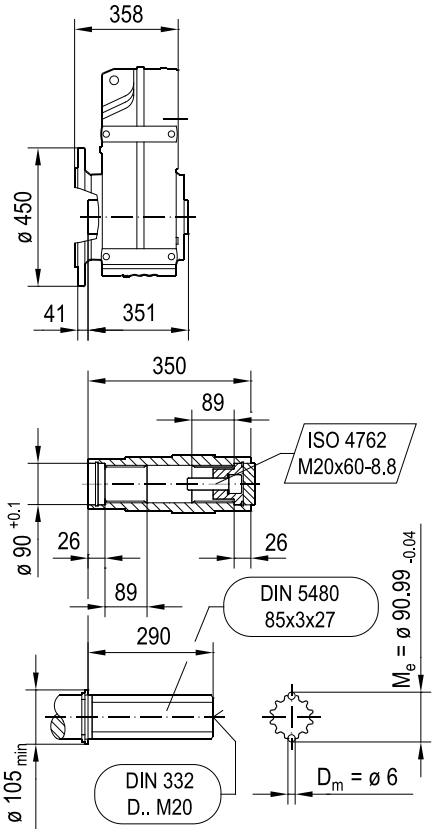

(→ 4.1)	DRN										
	100LS	100L/LM	112M	132S	132M	132L	160..	180..	200L	225..	250M
AC	197	197	221	221	261	261	314	357	394	434	495
AD	157	157	170	170	228	228	253	268	283	305	394
ADS	158	158	172	172	228	228	253	268	283	305	394
L	805	855	886	936	954	980	1046	1069	1179	1153	1290
LS	899	949	998	1048	1092	1117	1235	1258	1384	1358	1530
LB	282	332	363	413	431	457	523	546	656	630	767
LBS	376	426	475	525	569	594	712	735	861	835	1007

FM107..

42 116 00 17

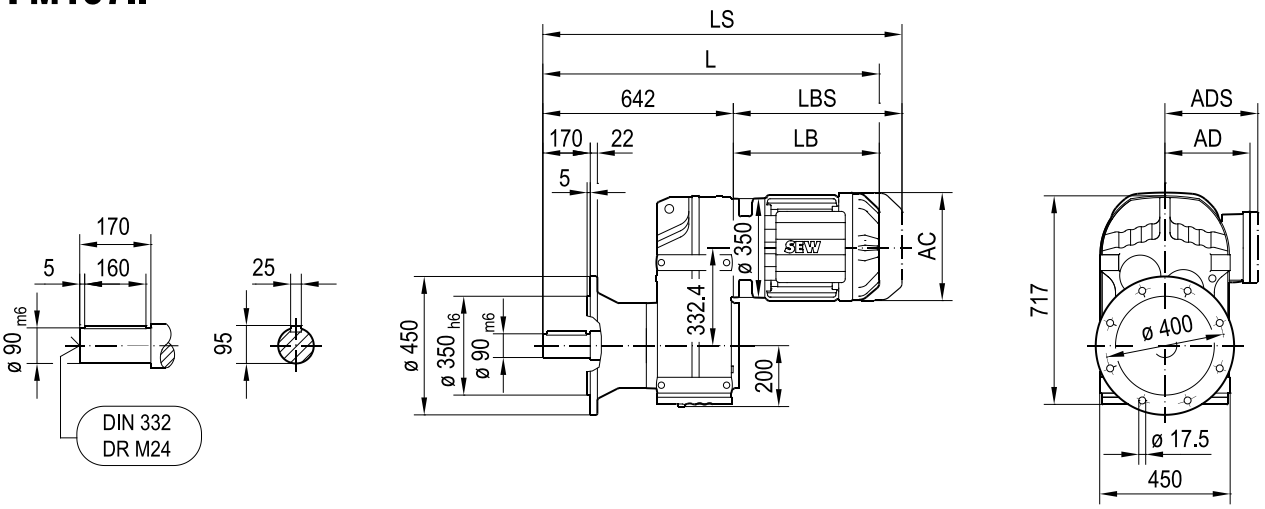

FAM107..

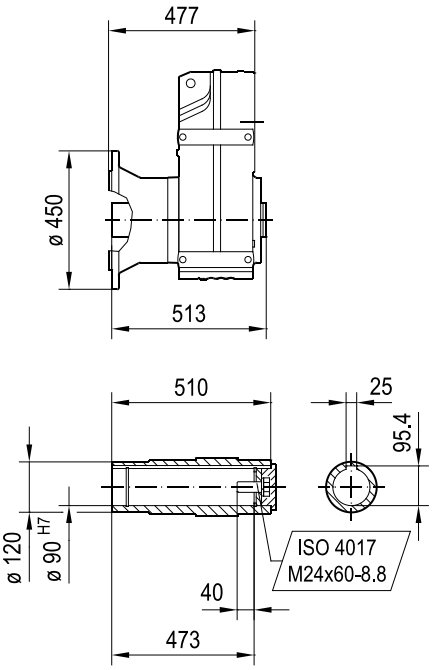

(→ 📖 4.1)	DRN										
	100LS	100L/LM	112M	132S	132M	132L	160..	180..	200L	225..	250M
AC	197	197	221	221	261	261	314	357	394	434	495
AD	157	157	170	170	228	228	253	268	283	305	394
ADS	158	158	172	172	228	228	253	268	283	305	394
L	924	974	1005	1055	1073	1099	1165	1188	1298	1272	1409
LS	1018	1068	1117	1167	1211	1236	1354	1377	1503	1477	1649
LB	282	332	363	413	431	457	523	546	656	630	767
LBS	376	426	475	525	569	594	712	735	861	835	1007

FA107..

42 061 01 14

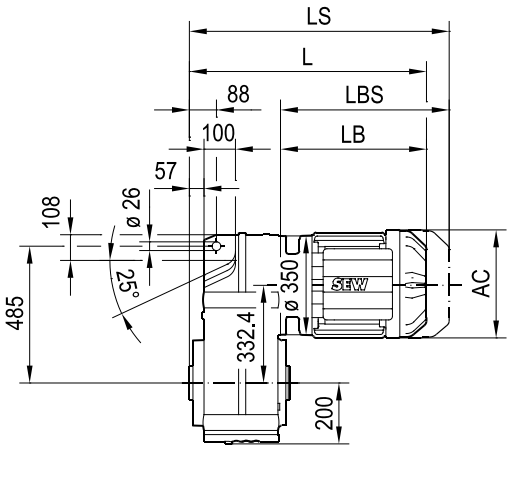

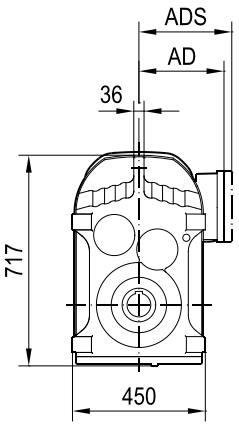

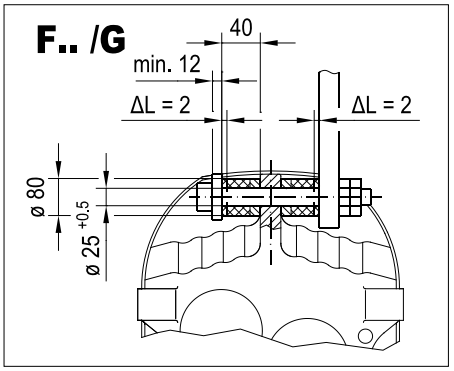

FA107..

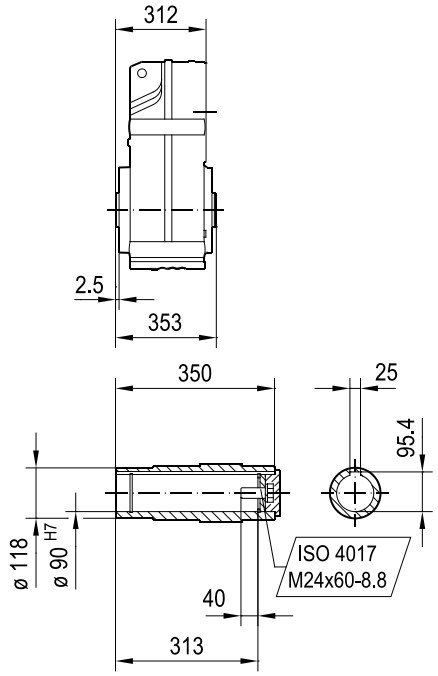

FH107..

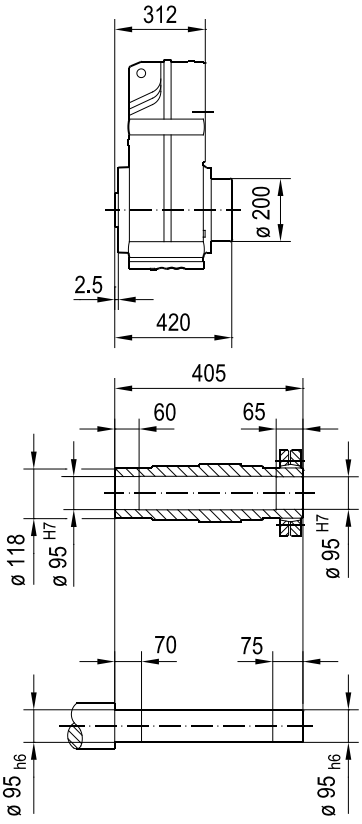

FV107..

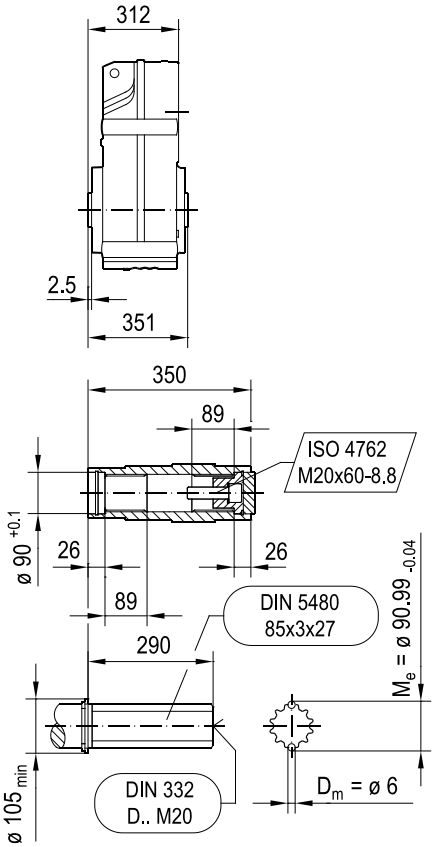

(→ 4.1)	DRN										
	100LS	100L/LM	112M	132S	132M	132L	160..	180..	200L	225..	250M
AC	197	197	221	221	261	261	314	357	394	434	495
AD	157	157	170	170	228	228	253	268	283	305	394
ADS	158	158	172	172	228	228	253	268	283	305	394
L	594	644	675	725	743	769	835	858	968	942	1079
LS	688	738	787	837	881	906	1024	1047	1173	1147	1319
LB	282	332	363	413	431	457	523	546	656	630	767
LBS	376	426	475	525	569	594	712	735	861	835	1007

FAZ107..

42 062 00 14

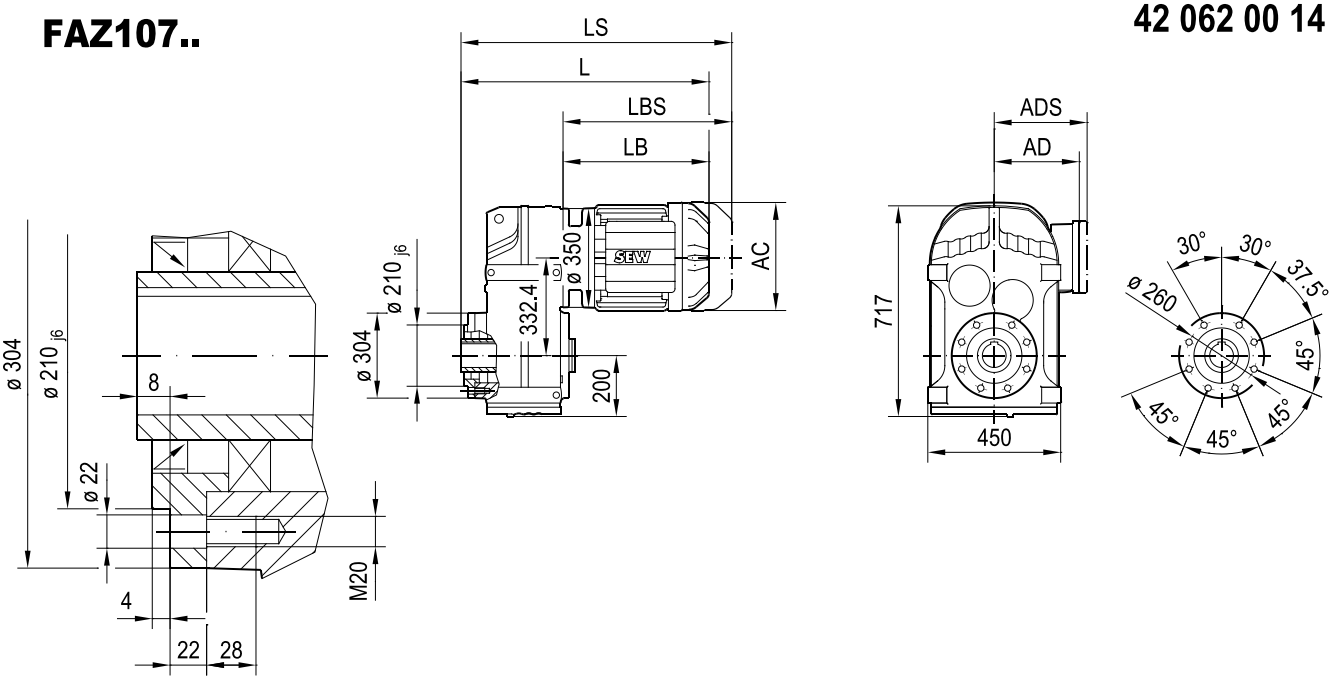

FAZ107..

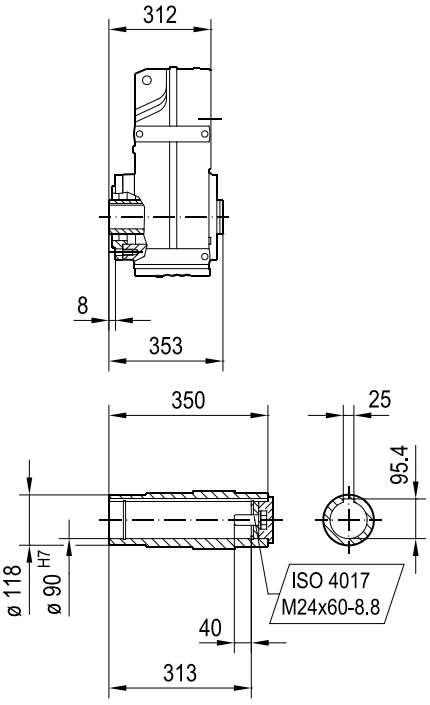

FHZ107..

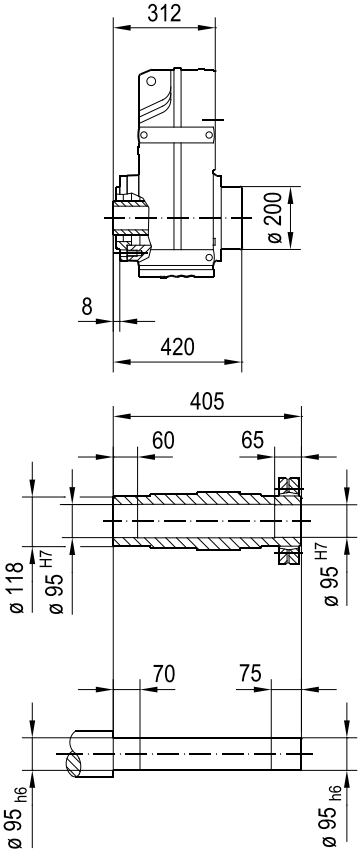

FVZ107..

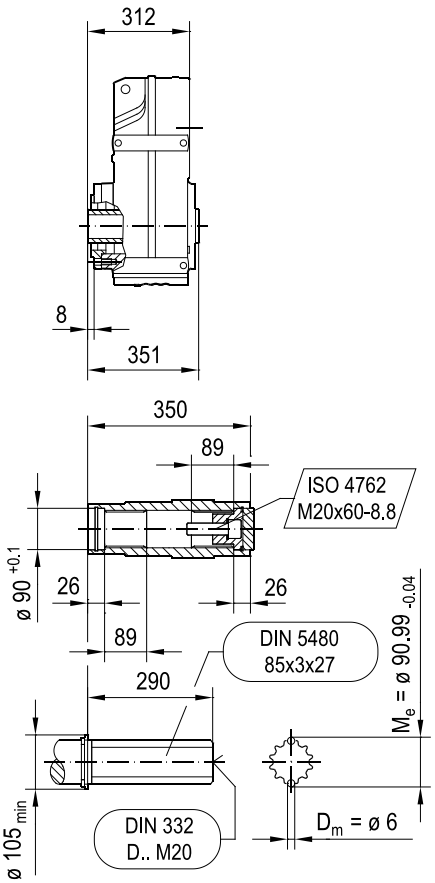

(→ 📖 4.1)	DRN										
	100LS	100L/LM	112M	132S	132M	132L	160..	180..	200L	225..	250M
AC	197	197	221	221	261	261	314	357	394	434	495
AD	157	157	170	170	228	228	253	268	283	305	394
ADS	158	158	172	172	228	228	253	268	283	305	394
L	594	644	675	725	743	769	835	858	968	942	1079
LS	688	738	787	837	881	906	1024	1047	1173	1147	1319
LB	282	332	363	413	431	457	523	546	656	630	767
LBS	376	426	475	525	569	594	712	735	861	835	1007

FZ107..

42 079 01 15

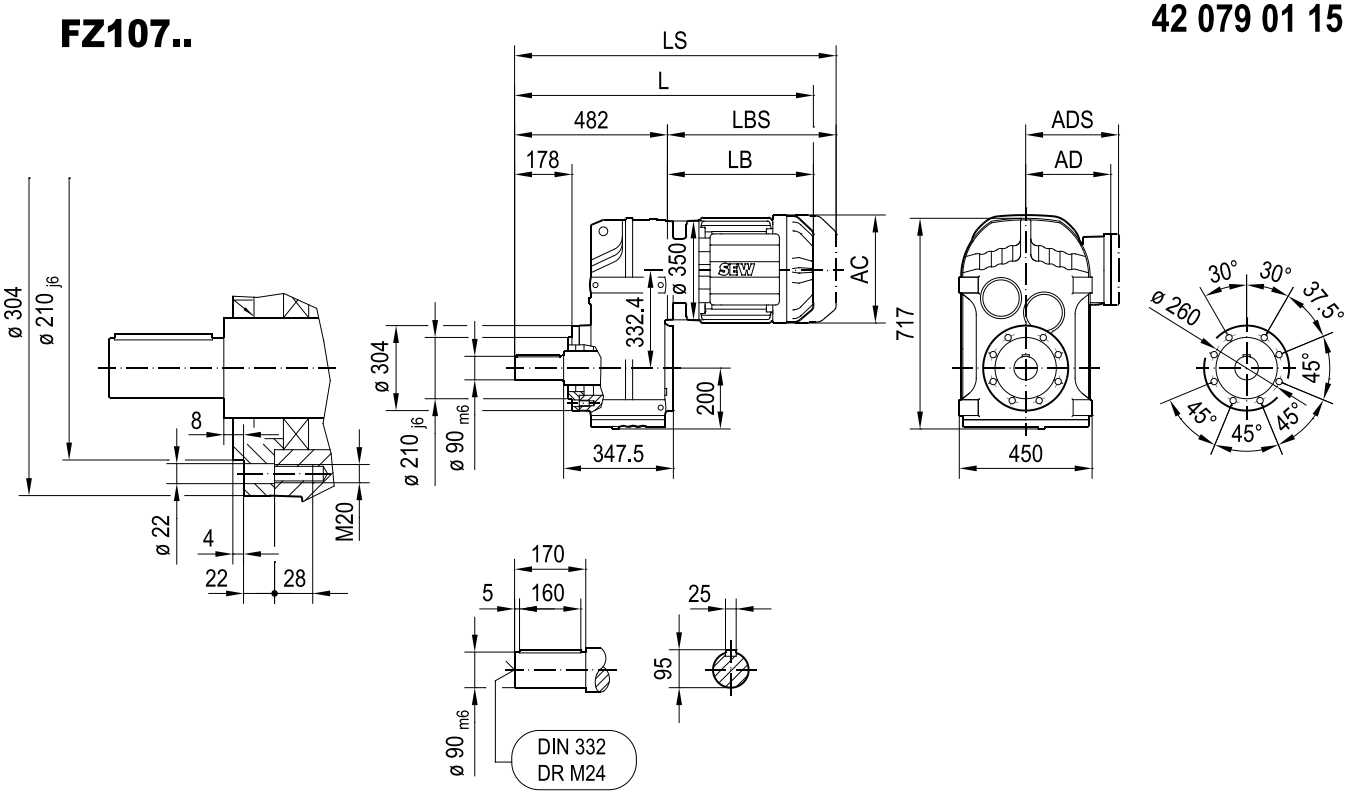

(→ 📖 4.1)	DRN										
	100LS	100L/LM	112M	132S	132M	132L	160..	180..	200L	225..	250M
AC	197	197	221	221	261	261	314	357	394	434	495
AD	157	157	170	170	228	228	253	268	283	305	394
ADS	158	158	172	172	228	228	253	268	283	305	394
L	764	814	845	895	913	939	1005	1028	1138	1112	1249
LS	858	908	957	1007	1051	1076	1194	1217	1343	1317	1489
LB	282	332	363	413	431	457	523	546	656	630	767
LBS	376	426	475	525	569	594	712	735	861	835	1007

FT107..

42 063 03 14

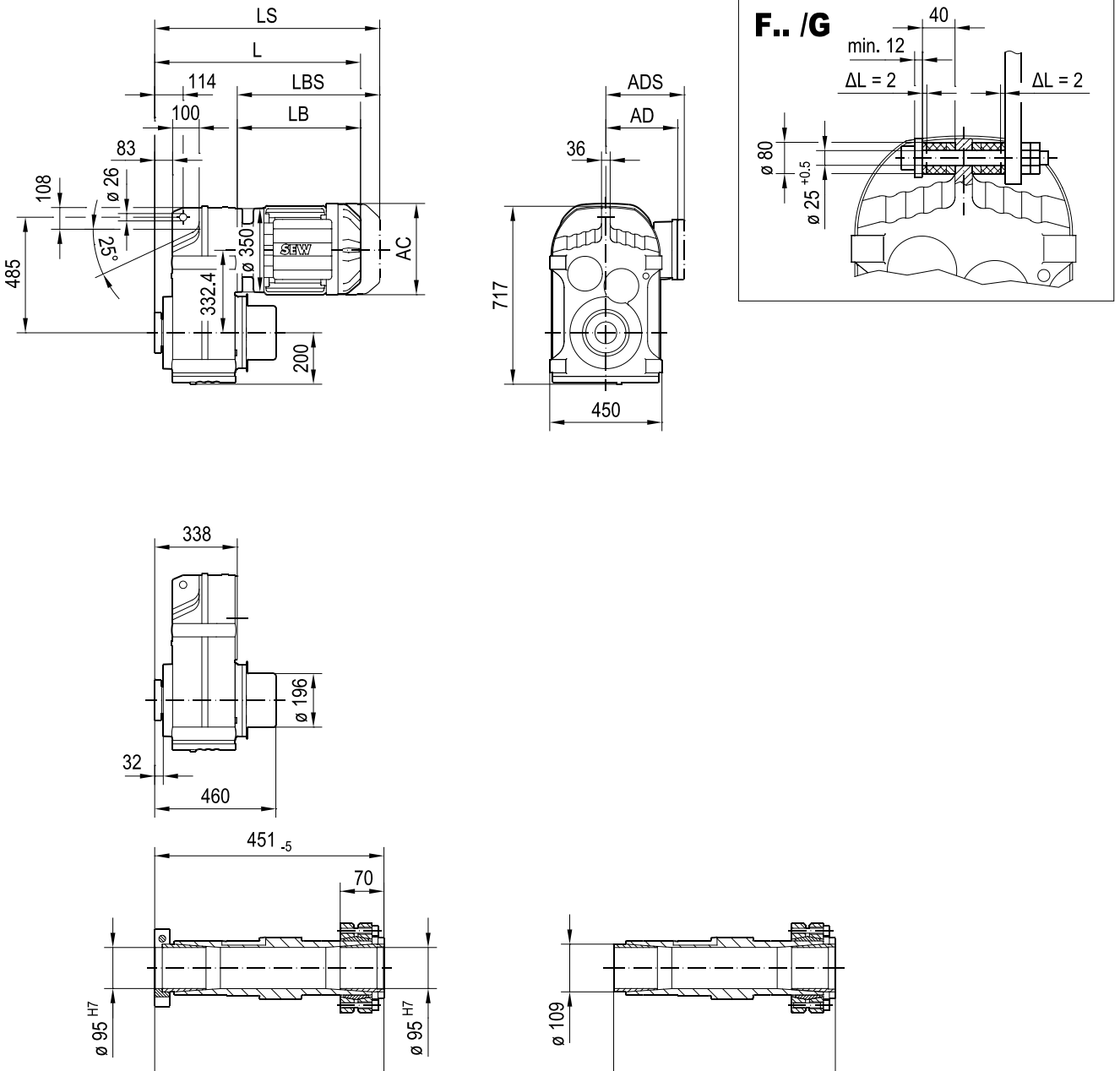

(→ 📖 4.1)	DRN										
	100LS	100L/LM	112M	132S	132M	132L	160..	180..	200L	225..	250M
AC	197	197	221	221	261	261	314	357	394	434	495
AD	157	157	170	170	228	228	253	268	283	305	394
ADS	158	158	172	172	228	228	253	268	283	305	394
L	620	670	701	751	769	795	861	884	994	968	1105
LS	714	764	813	863	907	932	1050	1073	1199	1173	1345
LB	282	332	363	413	431	457	523	546	656	630	767
LBS	376	426	475	525	569	594	712	735	861	835	1007

F127..

42 064 01 14

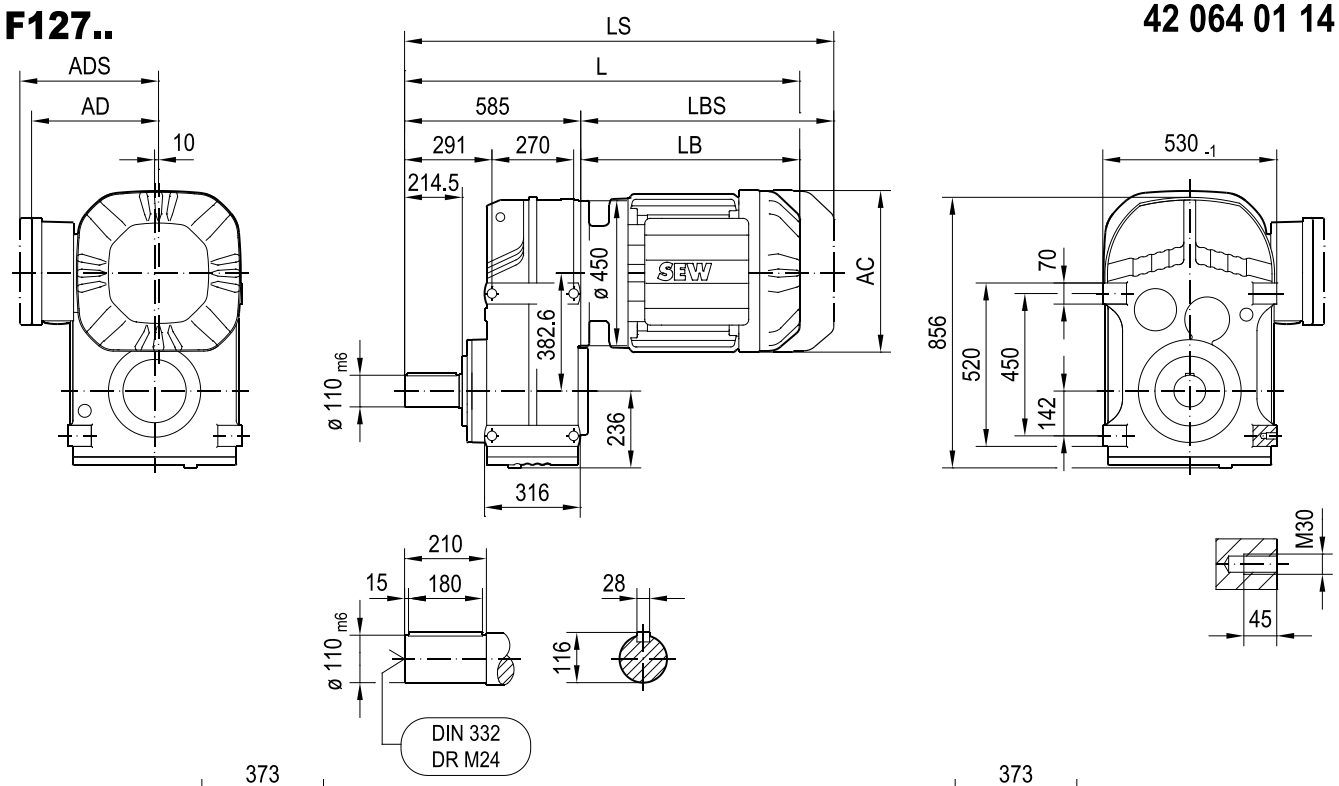

FA127B..

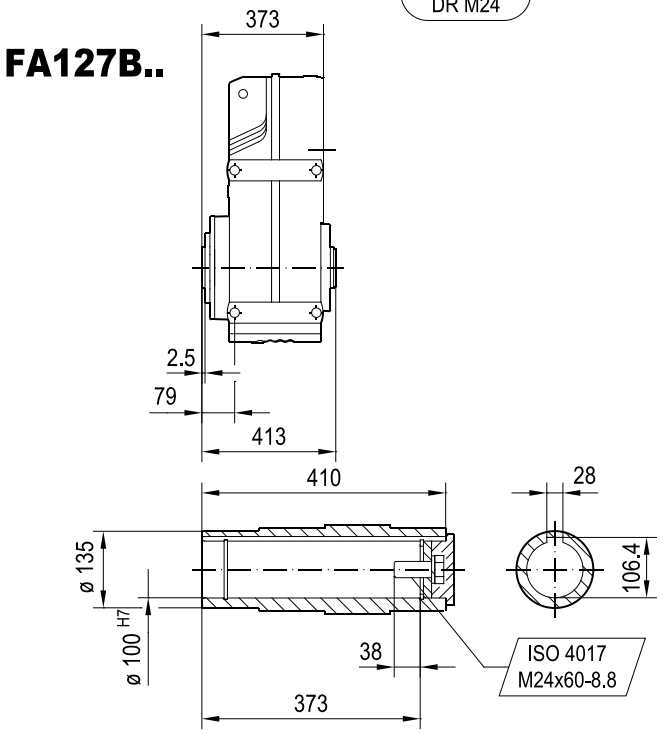

FH127B..

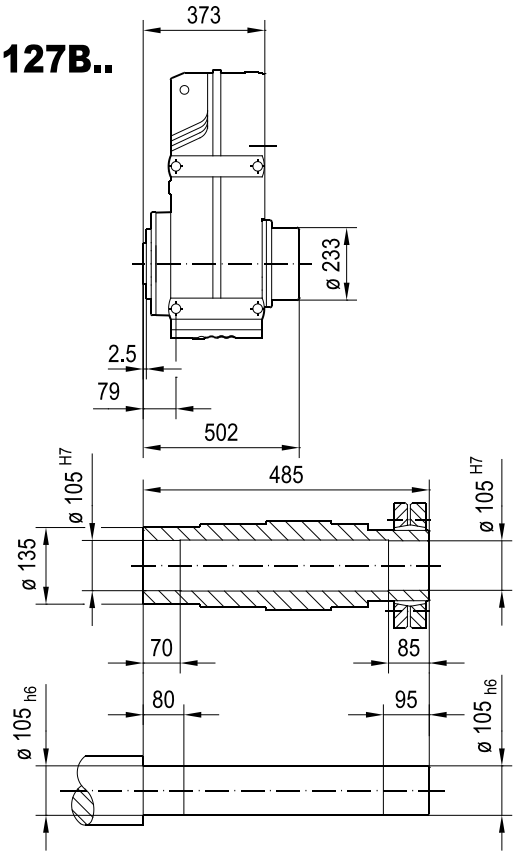

(→ 📖 4.1)	DRN									
	132S	132M	132L	160..	180..	200L	225..	250M	280S	280M
AC	221	261	261	314	357	394	434	495	495	495
AD	170	228	228	253	268	283	305	394	394	394
ADS	172	228	228	253	268	283	305	394	394	394
L	983	1001	1027	1093	1116	1226	1200	1337	1337	1432
LS	1095	1139	1164	1282	1305	1431	1405	1577	1577	1672
LB	398	416	442	508	531	641	615	752	752	847
LBS	510	554	579	697	720	846	820	992	992	1087

FF127..

42 065 00 14

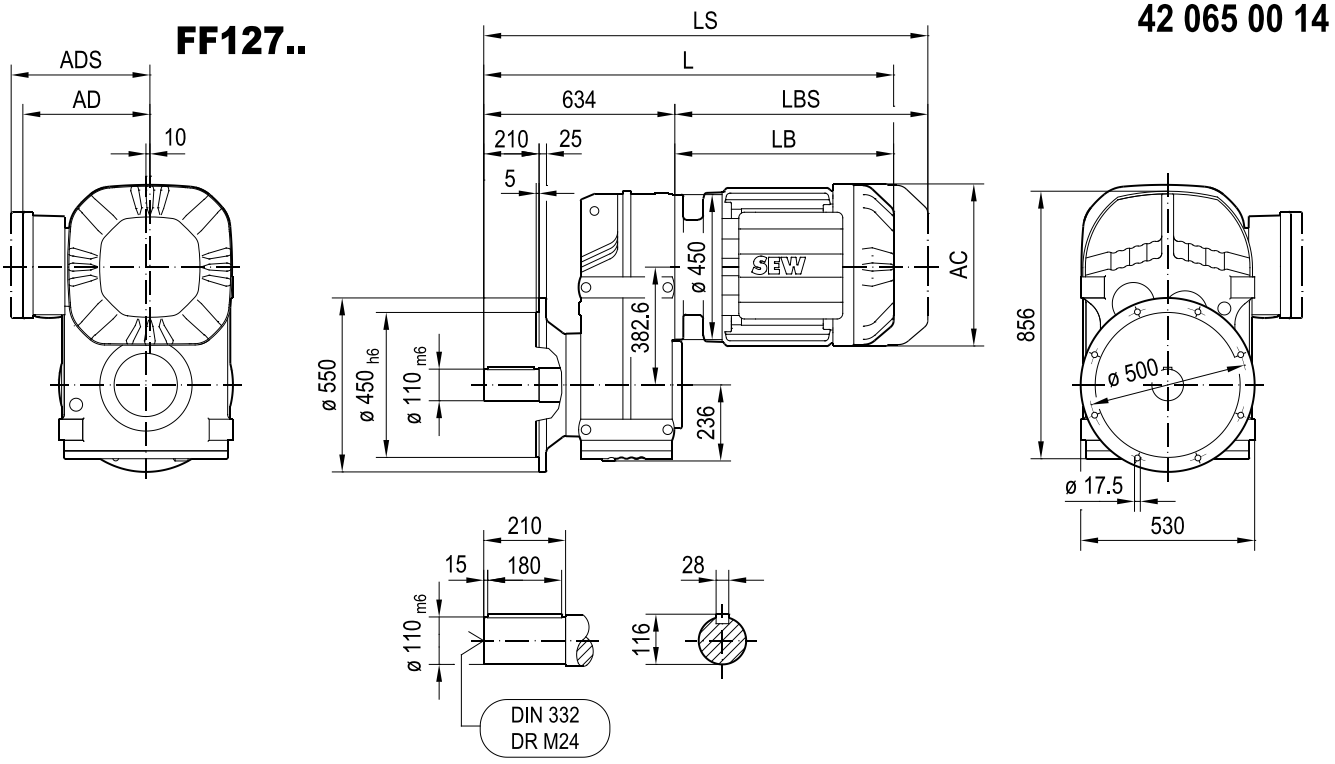

FAF127..

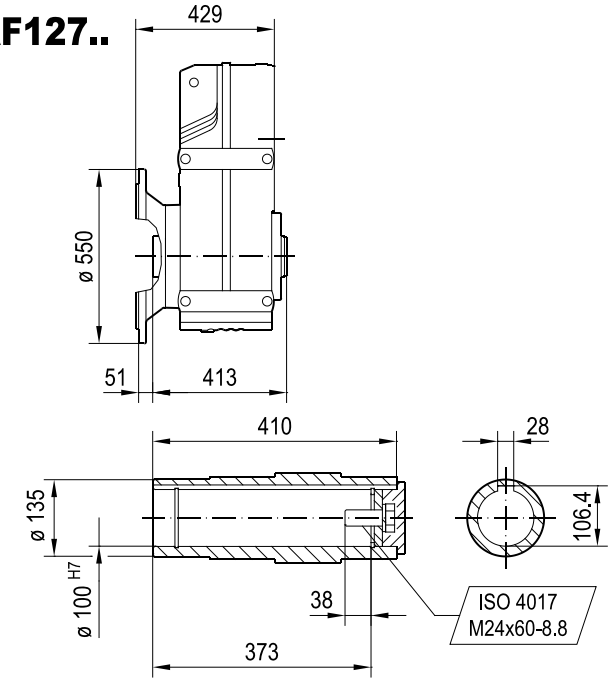

FHF127..

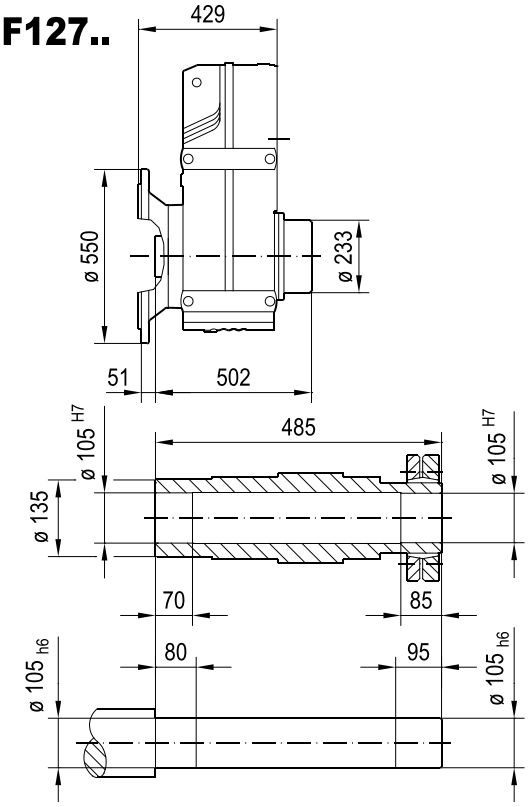

(→ 📖 4.1)	DRN									
	132S	132M	132L	160..	180..	200L	225..	250M	280S	280M
AC	221	261	261	314	357	394	434	495	495	495
AD	170	228	228	253	268	283	305	394	394	394
ADS	172	228	228	253	268	283	305	394	394	394
L	1032	1050	1076	1142	1165	1275	1249	1386	1386	1481
LS	1144	1188	1213	1331	1354	1480	1454	1626	1626	1721
LB	398	416	442	508	531	641	615	752	752	847
LBS	510	554	579	697	720	846	820	992	992	1087

FM127..

42 011 01 17

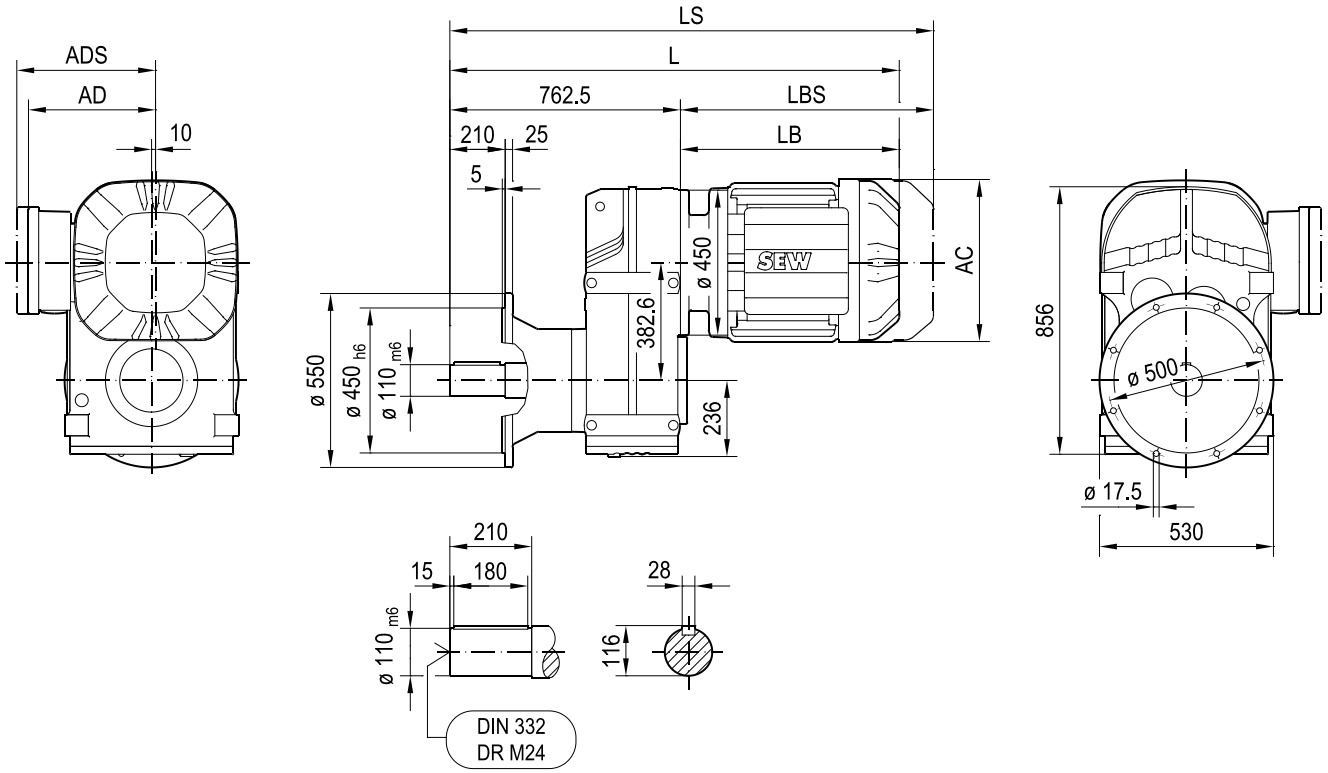

FAM127..

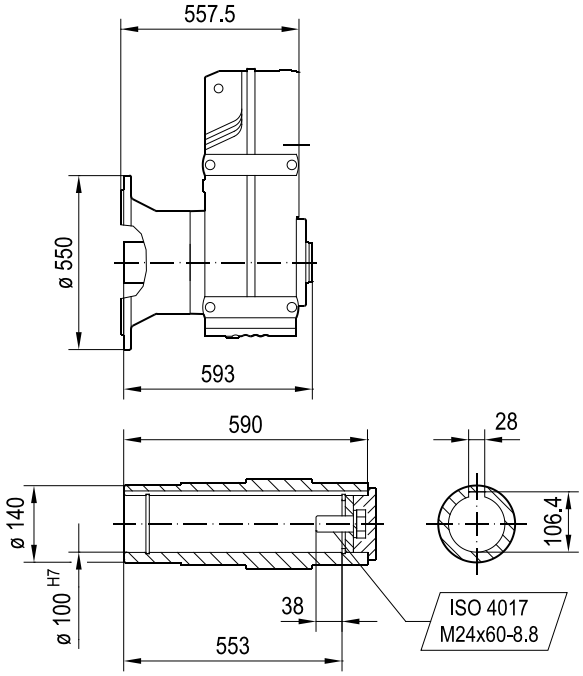

(→ 📖 4.1)	DRN									
	132S	132M	132L	160..	180..	200L	225..	250M	280S	280M
AC	221	261	261	314	357	394	434	495	495	495
AD	170	228	228	253	268	283	305	394	394	394
ADS	172	228	228	253	268	283	305	394	394	394
L	1161	1179	1204	1271	1294	1403	1378	1515	1515	1610
LS	1273	1316	1341	1460	1483	1608	1583	1755	1755	1850
LB	398	416	442	508	531	641	615	752	752	847
LBS	510	554	579	697	720	846	820	992	992	1087

FA127..

42 066 00 14

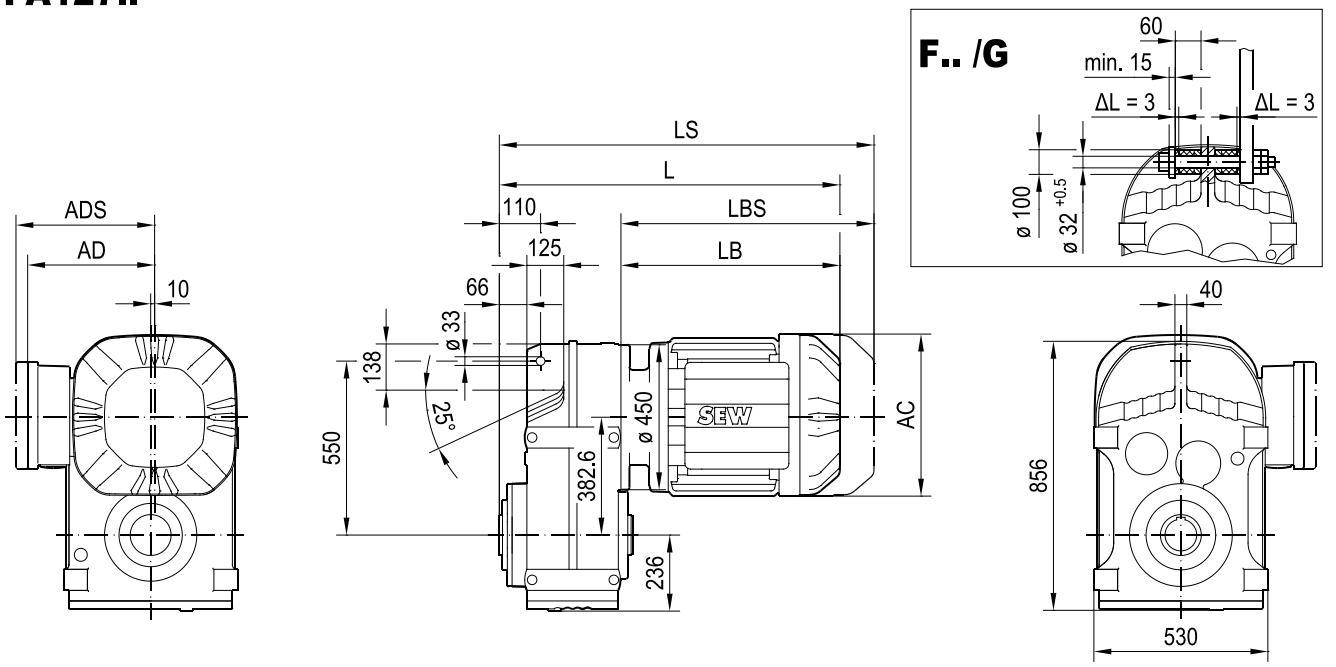

FA127..

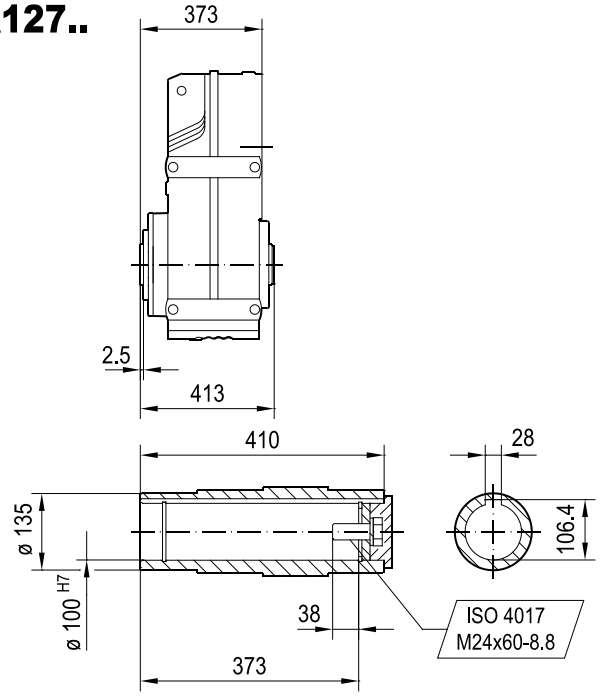

FH127..

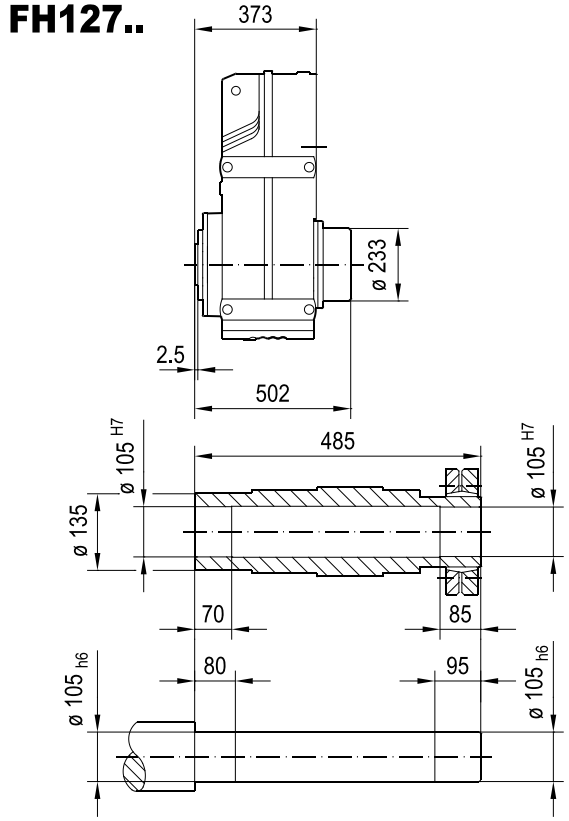

(→ 📖 4.1)	DRN									
	132S	132M	132L	160..	180..	200L	225..	250M	280S	280M
AC	221	261	261	314	357	394	434	495	495	495
AD	170	228	228	253	268	283	305	394	394	394
ADS	172	228	228	253	268	283	305	394	394	394
L	771	789	815	881	904	1014	988	1125	1125	1220
LS	883	927	952	1070	1093	1219	1193	1365	1365	1460
LB	398	416	442	508	531	641	615	752	752	847
LBS	510	554	579	697	720	846	820	992	992	1087

FAZ127..

42 067 00 14

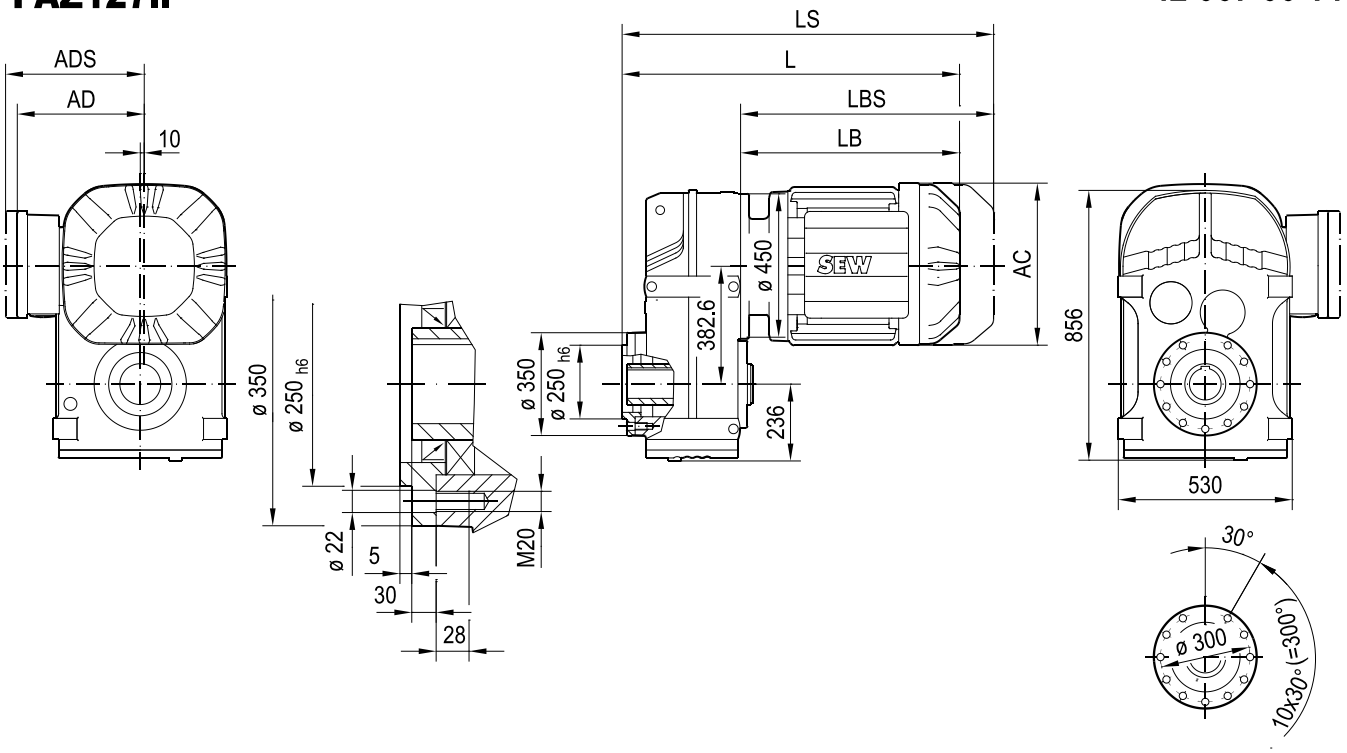

FAZ127..

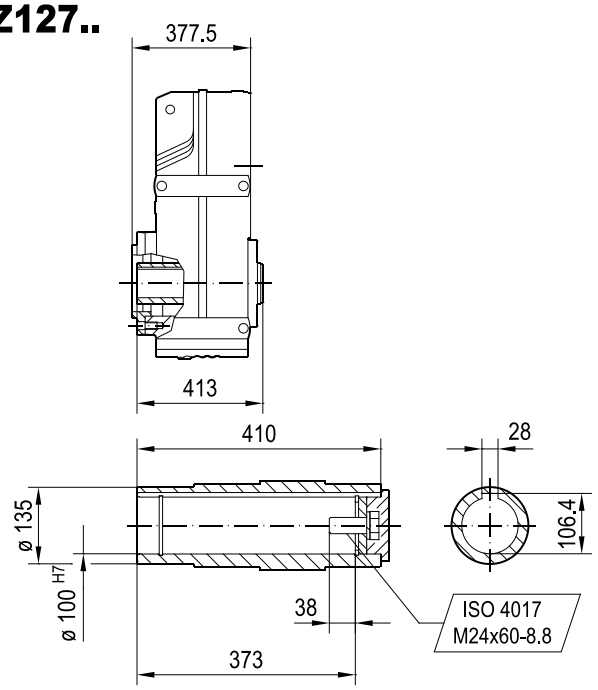

FHZ127..

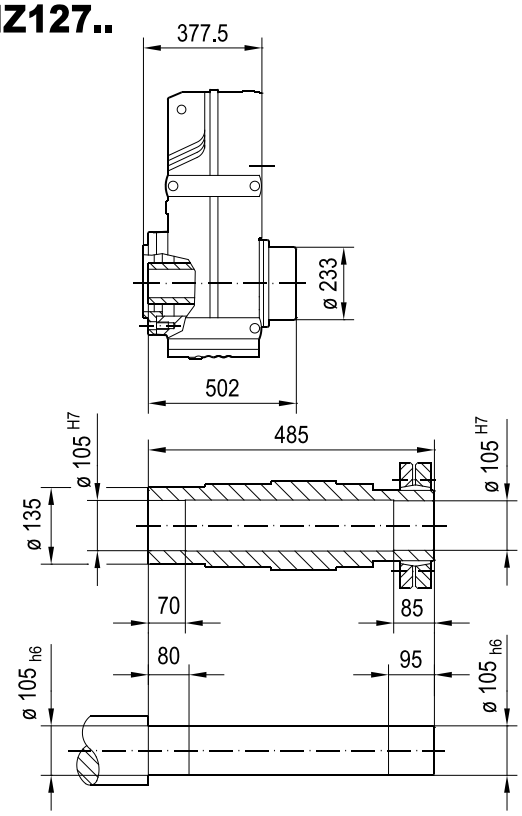

(→ 📖 4.1)	DRN									
	132S	132M	132L	160..	180..	200L	225..	250M	280S	280M
AC	221	261	261	314	357	394	434	495	495	495
AD	170	228	228	253	268	283	305	394	394	394
ADS	172	228	228	253	268	283	305	394	394	394
L	776	794	819	886	909	1018	993	1130	1130	1225
LS	888	931	956	1075	1098	1223	1198	1370	1370	1465
LB	398	416	442	508	531	641	615	752	752	847
LBS	510	554	579	697	720	846	820	992	992	1087

FZ127..

42 080 01 15

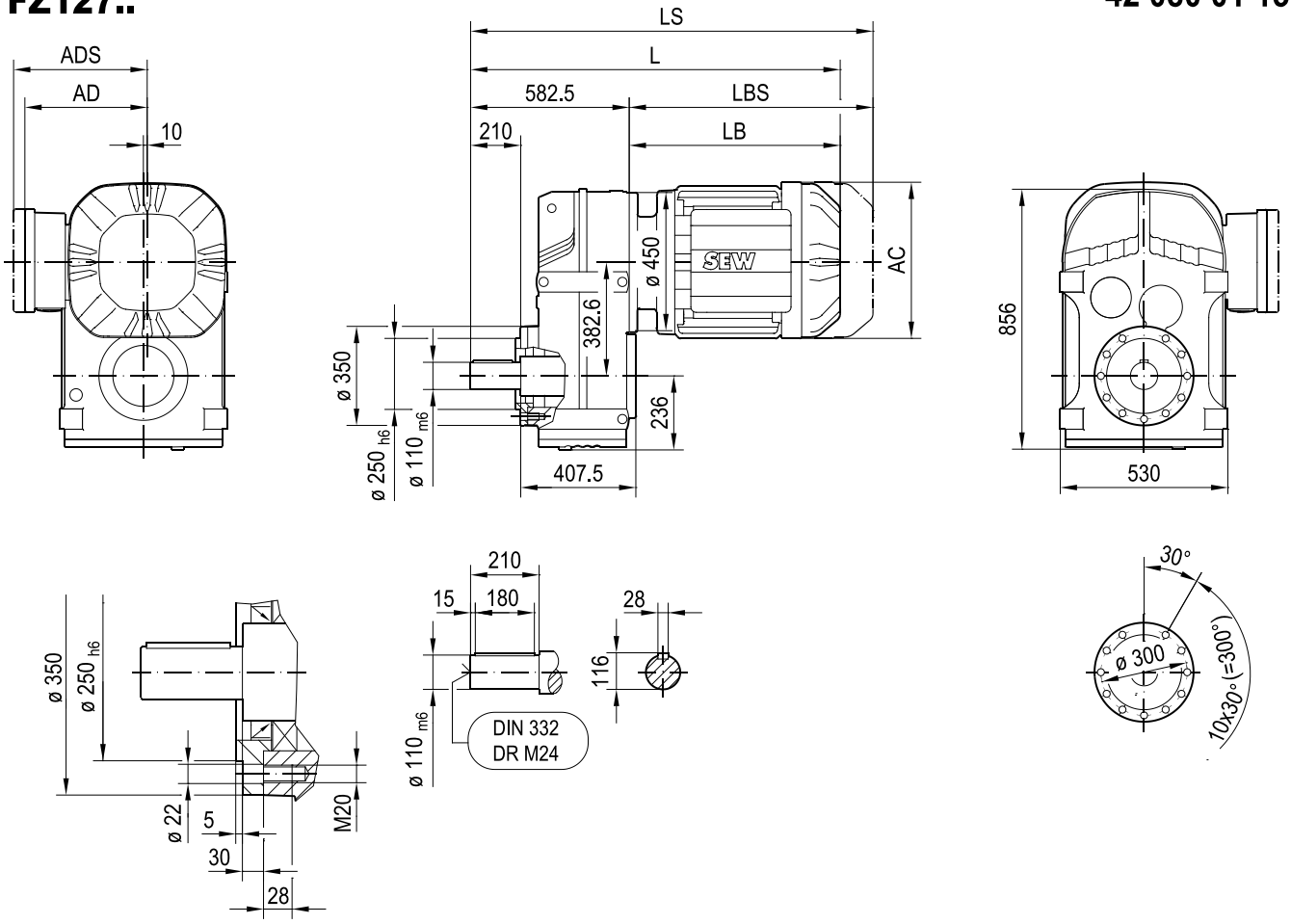

(→ 📖 4.1)	DRN									
	132S	132M	132L	160..	180..	200L	225..	250M	280S	280M
AC	221	261	261	314	357	394	434	495	495	495
AD	170	228	228	253	268	283	305	394	394	394
ADS	172	228	228	253	268	283	305	394	394	394
L	981	999	1024	1091	1114	1223	1198	1335	1335	1430
LS	1093	1136	1161	1280	1303	1428	1403	1575	1575	1670
LB	398	416	442	508	531	641	615	752	752	847
LBS	510	554	579	697	720	846	820	992	992	1087

FT127..

42 068 02 14

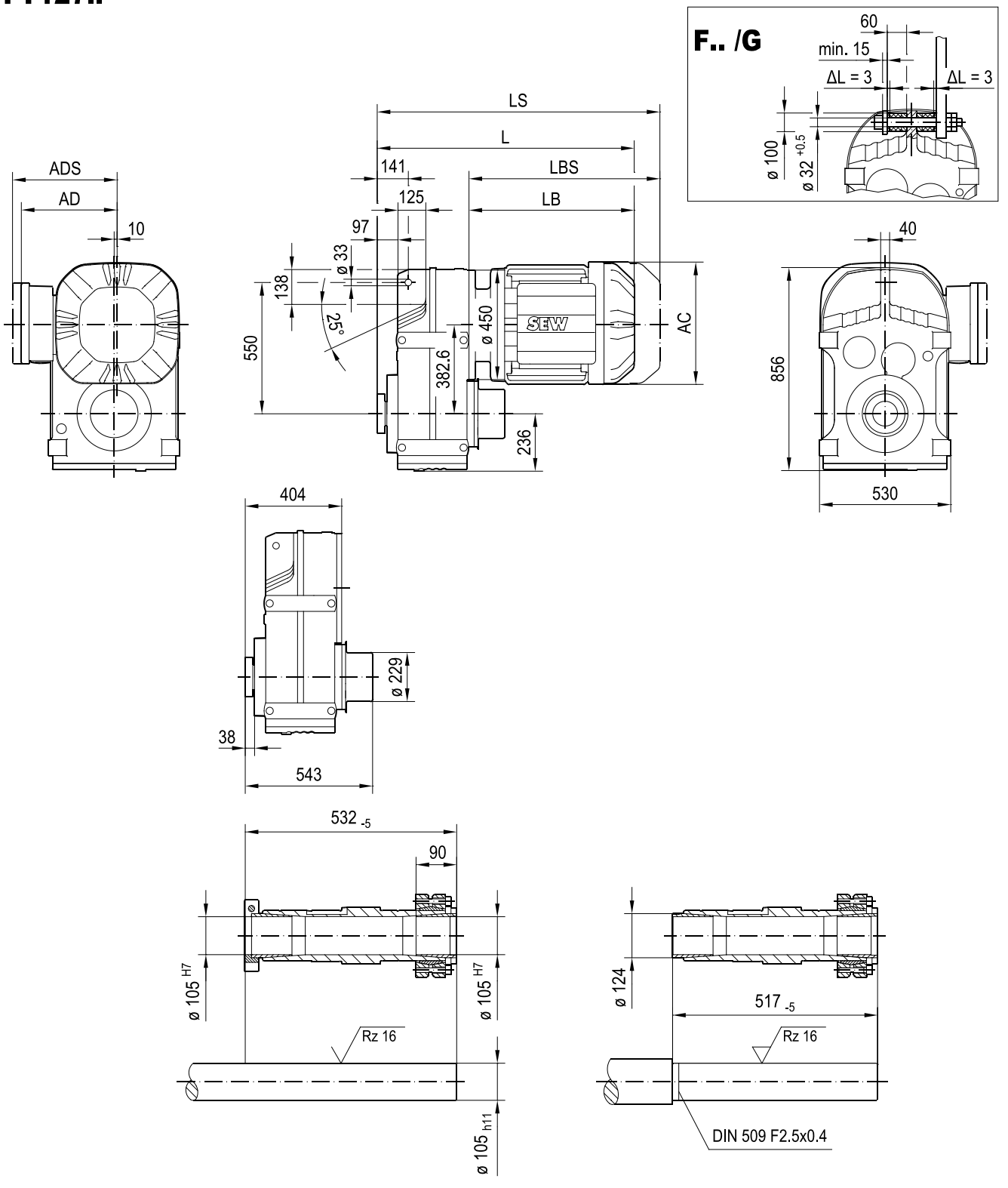

(→ 📖 4.1)	DRN									
	132S	132M	132L	160..	180..	200L	225..	250M	280S	280M
AC	221	261	261	314	357	394	434	495	495	495
AD	170	228	228	253	268	283	305	394	394	394
ADS	172	228	228	253	268	283	305	394	394	394
L	802	820	846	912	935	1045	1019	1156	1156	1251
LS	914	958	983	1101	1124	1250	1224	1396	1396	1491
LB	398	416	442	508	531	641	615	752	752	847
LBS	510	554	579	697	720	846	820	992	992	1087

F157..

42 069 01 14

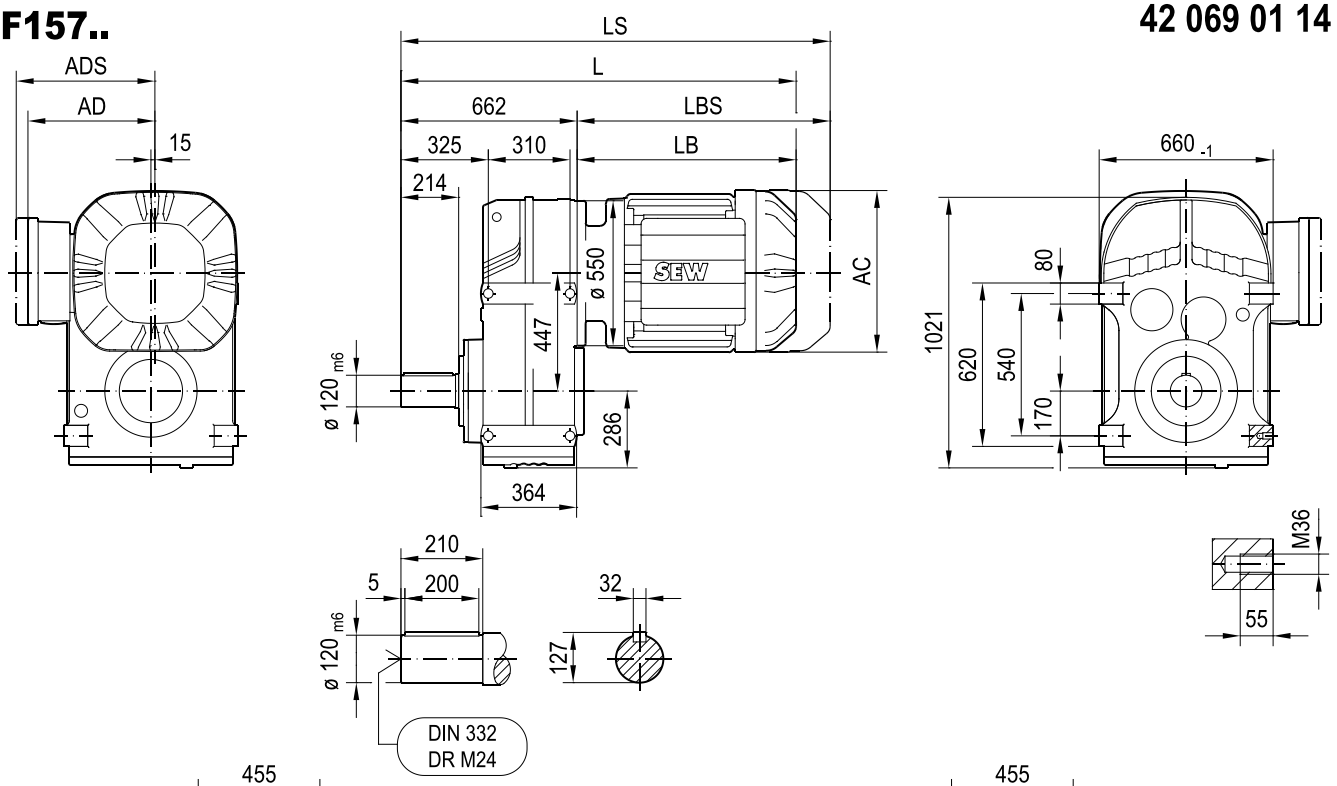

FA157B..

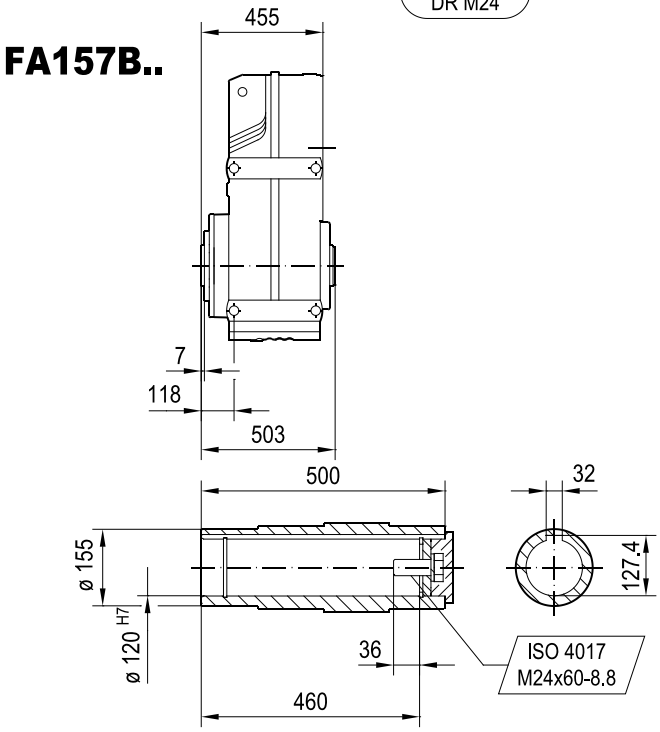

FH157B..

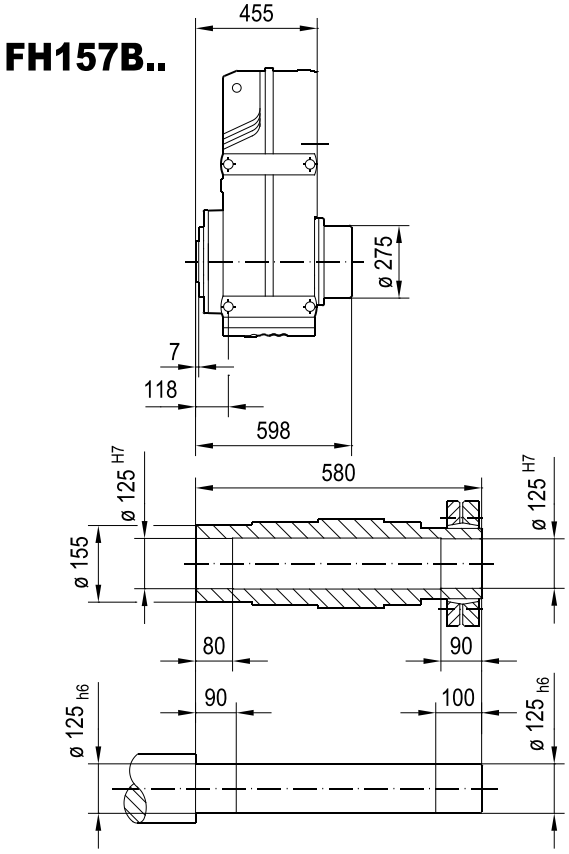

(→ 📖 4.1)	DRN									
	132L	160..	180..	200L	225..	250M	280S	280M	315S-M	315ME-H
AC	261	314	357	394	434	495	495	495	624	624
AD	228	253	268	283	305	394	394	394	506	506
ADS	228	253	268	283	305	394	394	394	506	506
L	1096	1162	1185	1295	1269	1406	1406	1501	1603	1733
LS	1233	1351	1374	1500	1474	1646	1646	1741	1854	1984
LB	434	500	523	633	607	744	744	839	941	1071
LBS	571	689	712	838	812	984	984	1079	1192	1322

42 070 00 14

FF157..

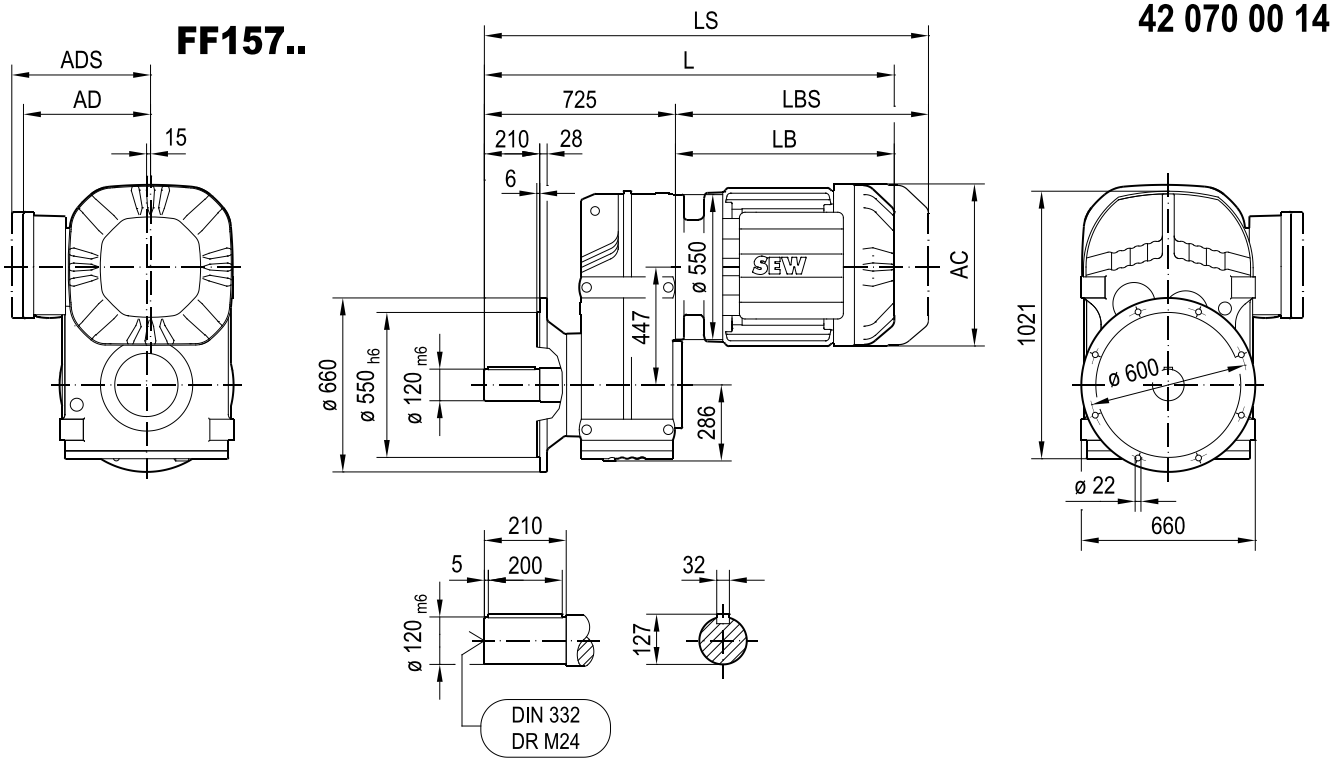

FAF157..

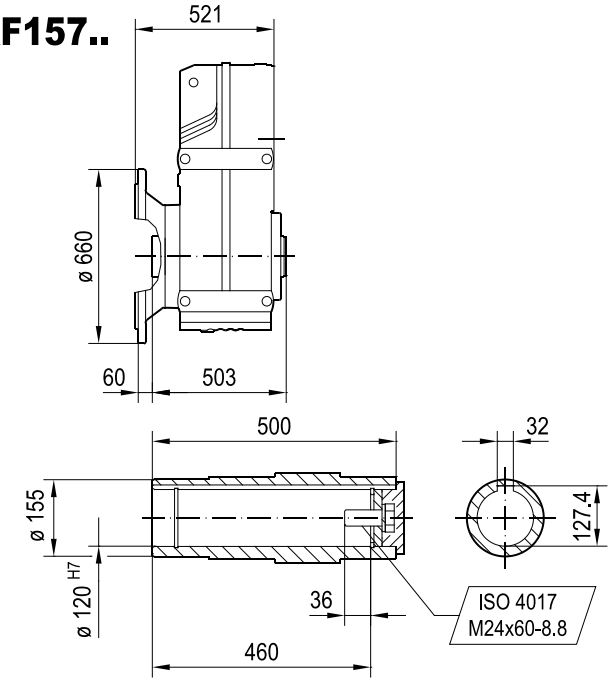

FHF157..

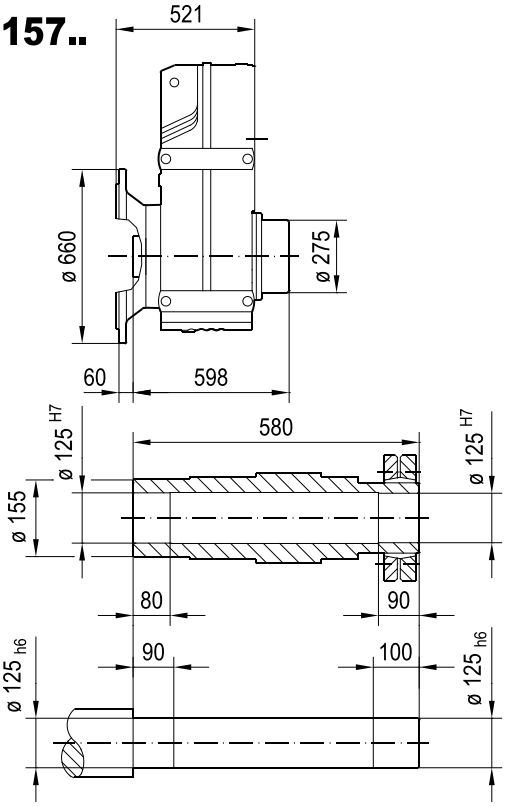

(→ 📖 4.1)	DRN									
	132L	160..	180..	200L	225..	250M	280S	280M	315S-M	315ME-H
AC	261	314	357	394	434	495	495	495	624	624
AD	228	253	268	283	305	394	394	394	506	506
ADS	228	253	268	283	305	394	394	394	506	506
L	1159	1225	1248	1358	1332	1469	1469	1564	1666	1796
LS	1296	1414	1437	1563	1537	1709	1709	1804	1917	2047
LB	434	500	523	633	607	744	744	839	941	1071
LBS	571	689	712	838	812	984	984	1079	1192	1322

FM157..

42 117 00 17

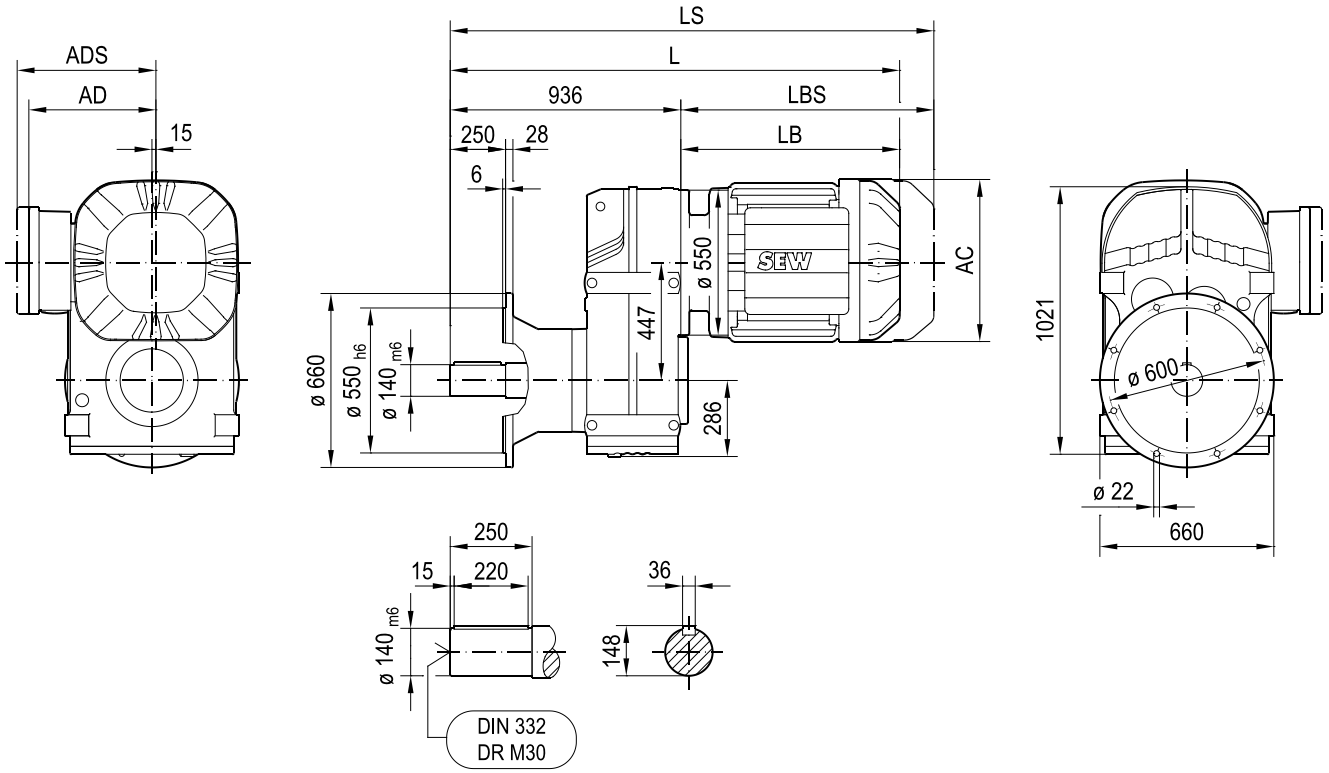

FAM157..

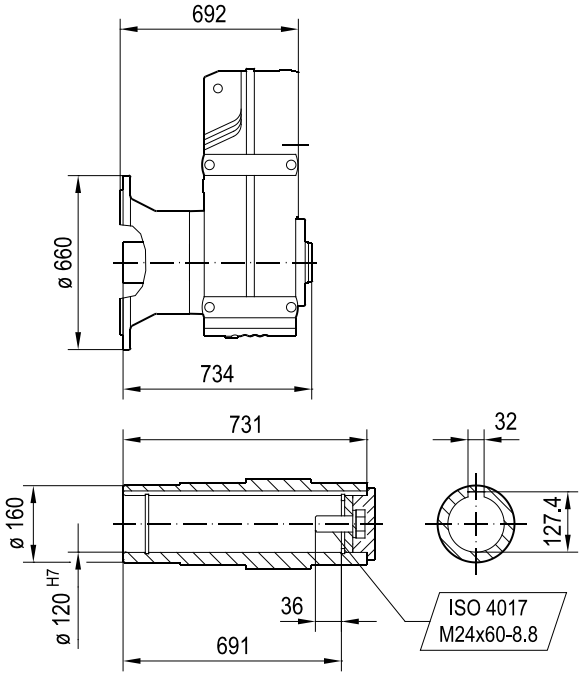

(→ 📖 4.1)	DRN									
	132L	160..	180..	200L	225..	250M	280S	280M	315S-M	315ME-H
AC	261	314	357	394	434	495	495	495	624	624
AD	228	253	268	283	305	394	394	394	506	506
ADS	228	253	268	283	305	394	394	394	506	506
L	1370	1436	1459	1569	1543	1680	1680	1775	1877	2007
LS	1507	1625	1648	1774	1748	1920	1920	2015	2128	2258
LB	434	500	523	633	607	744	744	839	941	1071
LBS	571	689	712	838	812	984	984	1079	1192	1322

FA157..

42 071 00 14

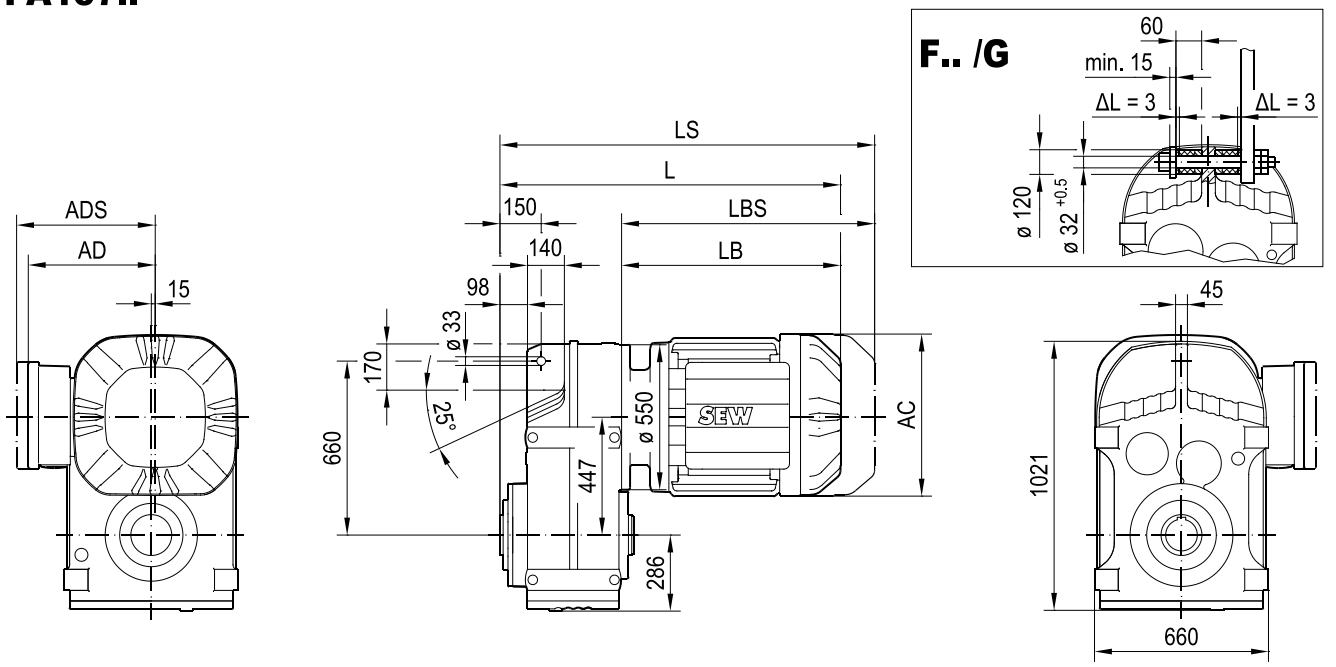

FA157..

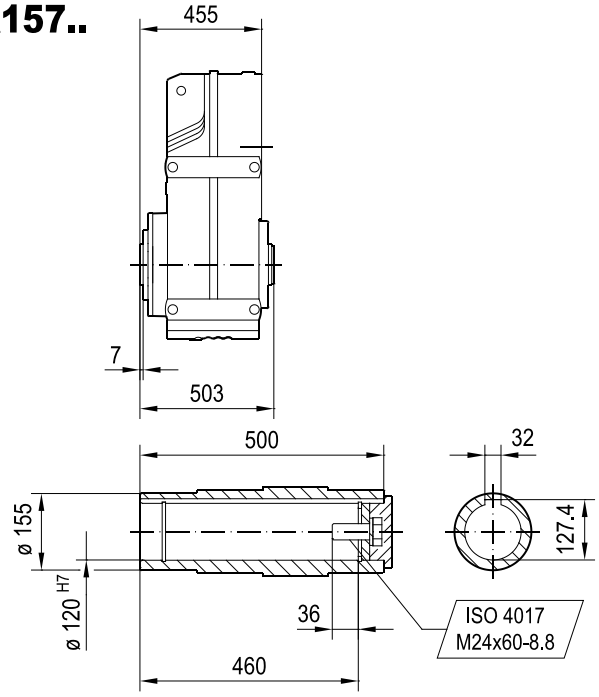

FH157..

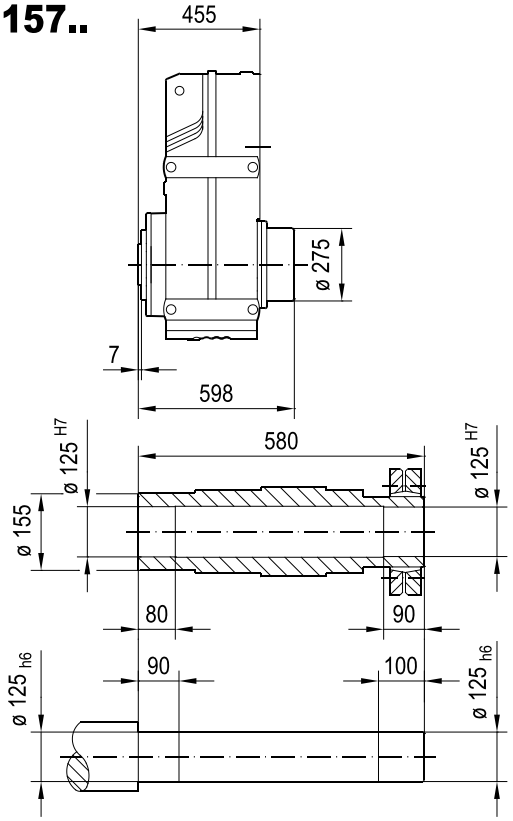

(→ 📖 4.1)	DRN									
	132L	160..	180..	200L	225..	250M	280S	280M	315S-M	315ME-H
AC	261	314	357	394	434	495	495	495	624	624
AD	228	253	268	283	305	394	394	394	506	506
ADS	228	253	268	283	305	394	394	394	506	506
L	889	955	978	1088	1062	1199	1199	1294	1396	1526
LS	1026	1144	1167	1293	1267	1439	1439	1534	1647	1777
LB	434	500	523	633	607	744	744	839	941	1071
LBS	571	689	712	838	812	984	984	1079	1192	1322

FAZ157..

42 072 00 14

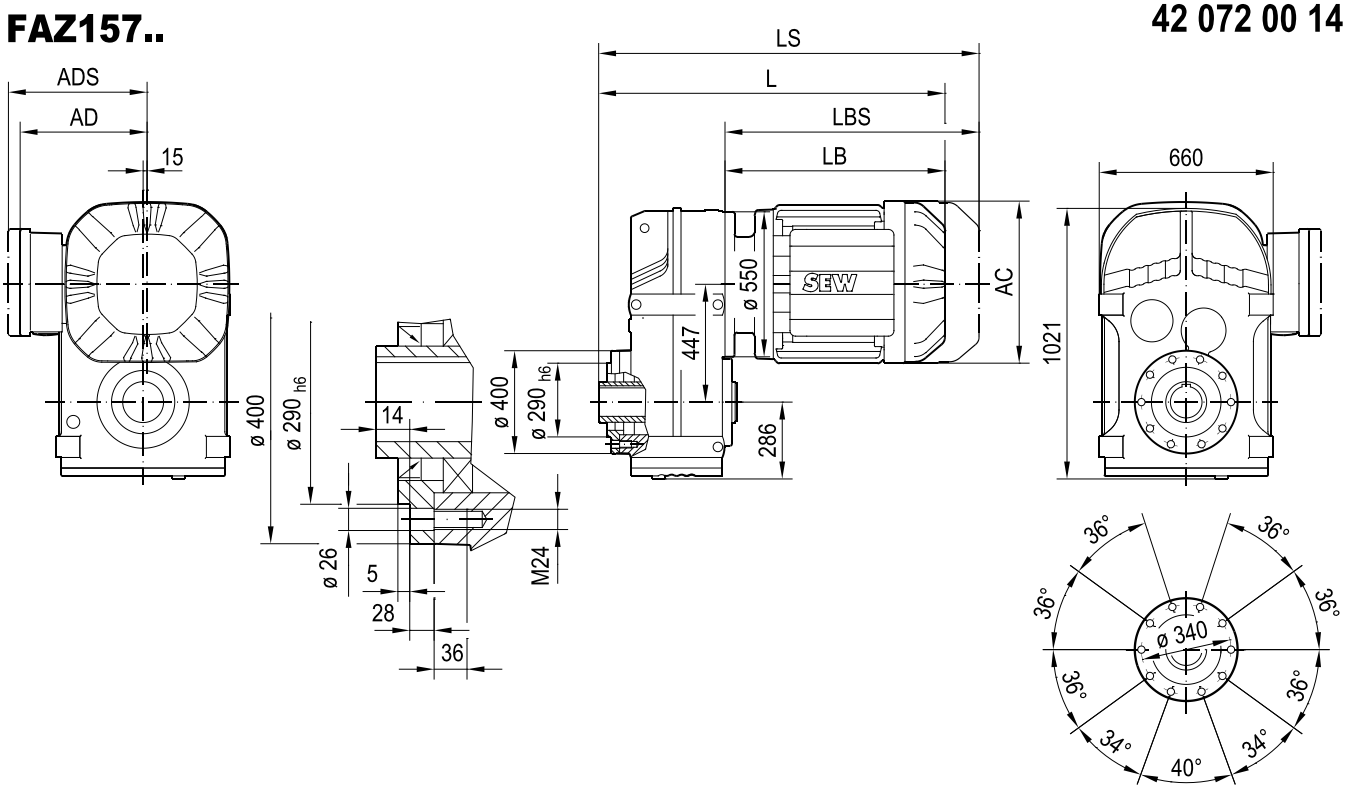

FAZ157..

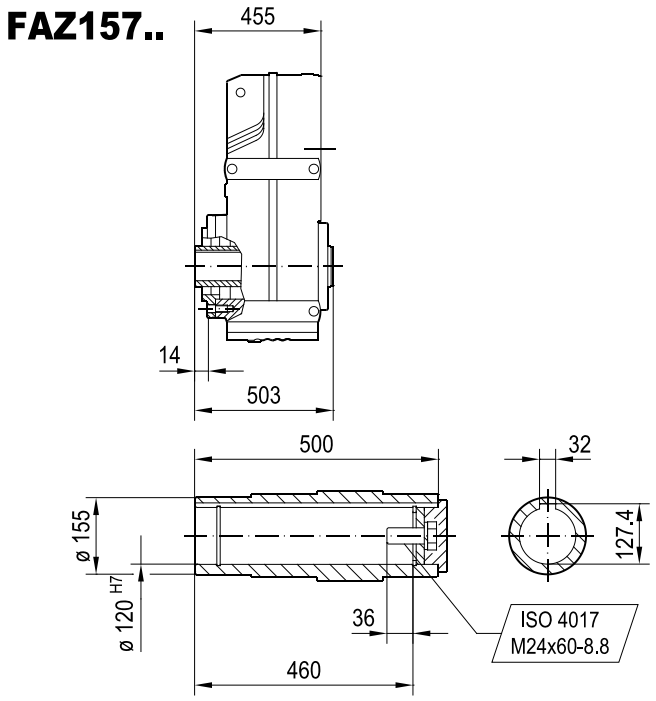

FHZ157..

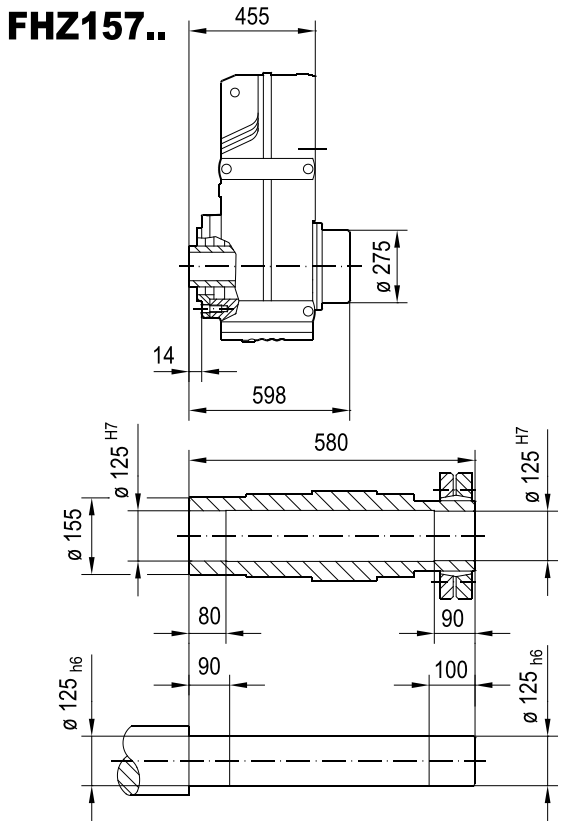

(→ 📖 4.1)	DRN									
	132L	160..	180..	200L	225..	250M	280S	280M	315S-M	315ME-H
AC	261	314	357	394	434	495	495	495	624	624
AD	228	253	268	283	305	394	394	394	506	506
ADS	228	253	268	283	305	394	394	394	506	506
L	889	955	978	1088	1062	1199	1199	1294	1396	1526
LS	1026	1144	1167	1293	1267	1439	1439	1534	1647	1777
LB	434	500	523	633	607	744	744	839	941	1071
LBS	571	689	712	838	812	984	984	1079	1192	1322

FZ157..

42 081 01 15

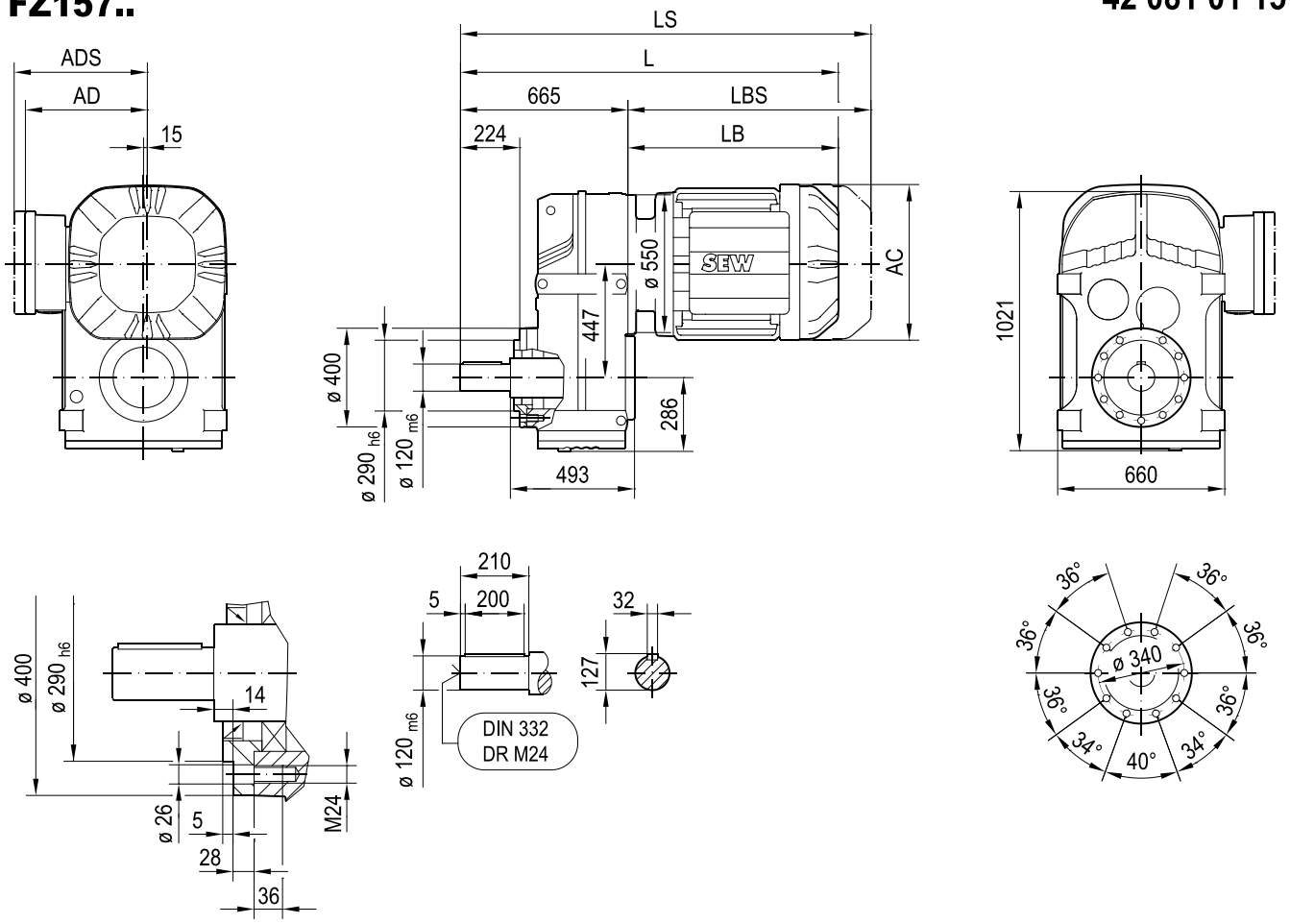

(→ 📖 4.1)	DRN									
	132L	160..	180..	200L	225..	250M	280S	280M	315S-M	315ME-H
AC	261	314	357	394	434	495	495	495	624	624
AD	228	253	268	283	305	394	394	394	506	506
ADS	228	253	268	283	305	394	394	394	506	506
L	1099	1165	1188	1298	1272	1409	1409	1504	1606	1736
LS	1236	1354	1377	1503	1477	1649	1649	1744	1857	1987
LB	434	500	523	633	607	744	744	839	941	1071
LBS	571	689	712	838	812	984	984	1079	1192	1322

FT157..

42 073 02 14

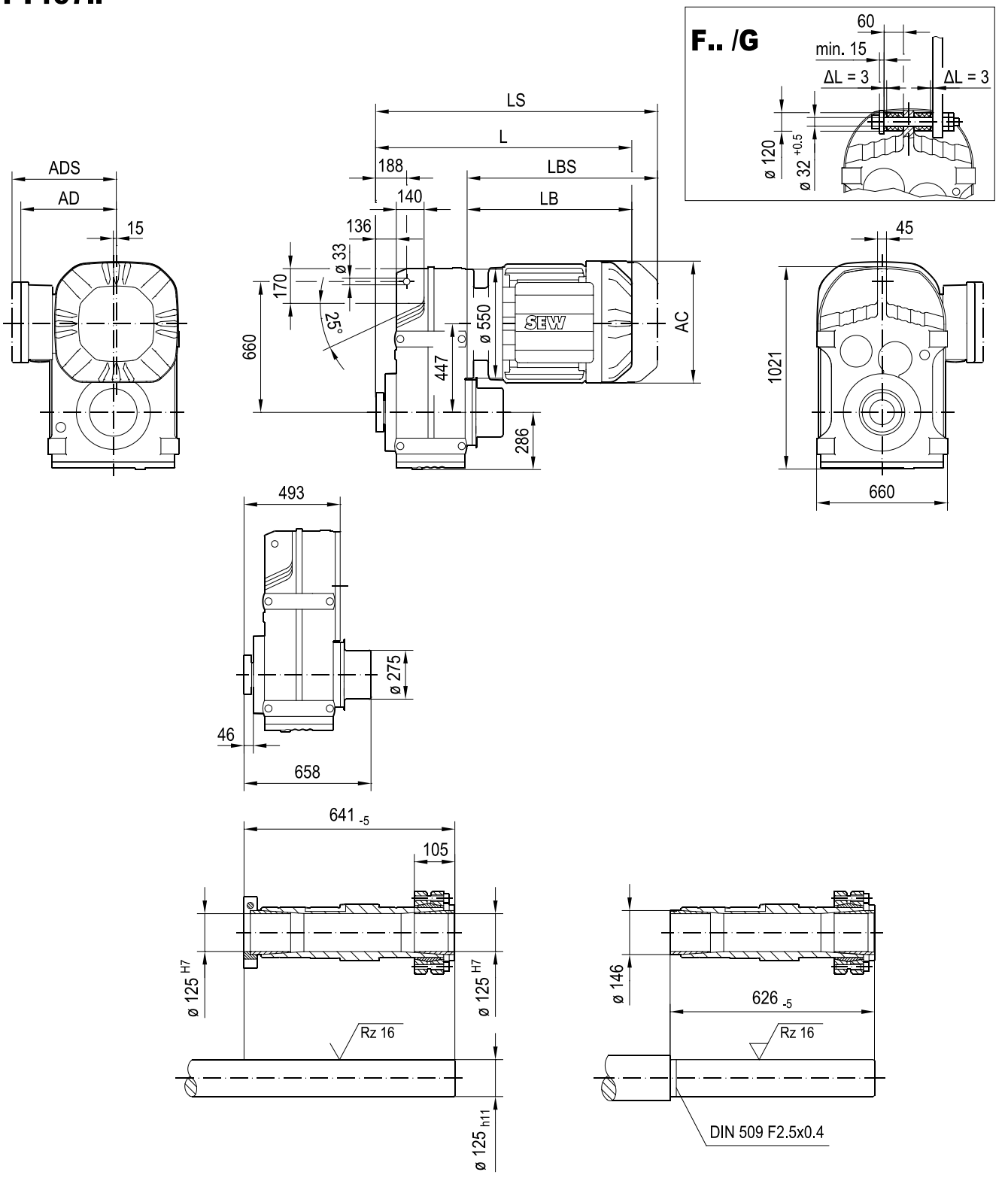

(→ 📖 4.1)	DRN									
	132L	160..	180..	200L	225..	250M	280S	280M	315S-M	315ME-H
AC	261	314	357	394	434	495	495	495	624	624
AD	228	253	268	283	305	394	394	394	506	506
ADS	228	253	268	283	305	394	394	394	506	506
L	927	993	1016	1126	1100	1237	1237	1332	1434	1564
LS	1064	1182	1205	1331	1305	1477	1477	1572	1685	1815
LB	434	500	523	633	607	744	744	839	941	1071
LBS	571	689	712	838	812	984	984	1079	1192	1322

4.3.5 Dimension sheets F..R..DRN..

42 084 01 21

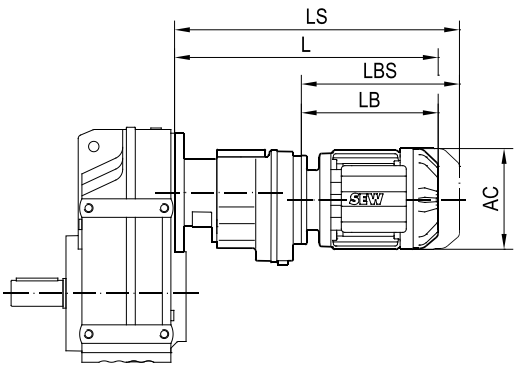

(→ 📖 4.1)	AC	L	LS	LB	LBS
F..27R17 DRN63MS	115	323	379	190	246
F..27R17 DRN63M	115	337	393	204	260
F..27R17 DRN71MS	139	339	406	206	273
F..27R17 DRN71M	139	359	426	226	293
F..37R17 DRN63MS	115	323	379	190	246
F..37R17 DRN63M	115	337	393	204	260
F..37R17 DRN71MS	139	339	406	206	273
F..37R17 DRN71M	139	359	426	226	293
F..37R17 DRN80MK	156	370	451	237	318
F..47R17 DRN63MS	115	323	379	190	246
F..47R17 DRN63M	115	337	393	204	260
F..47R17 DRN71MS	139	339	406	206	273
F..47R17 DRN71M	139	359	426	226	293
F..47R17 DRN80MK	156	370	451	237	318
F..47R17 DRN80M	156	416	497	283	364
F..57R37 DRN63MS	115	355	411	190	246
F..57R37 DRN63M	115	369	425	204	260
F..57R37 DRN71MS	139	371	438	206	273
F..57R37 DRN71M	139	391	458	226	293
F..57R37 DRN80MK	156	402	483	237	318
F..57R37 DRN80M	156	448	529	283	364
F..57R37 DRN90S	179	449	543	284	378
F..67R37 DRN63M	115	369	425	204	260
F..67R37 DRN71MS	139	371	438	206	273
F..67R37 DRN71M	139	391	458	226	293
F..67R37 DRN80MK	156	402	483	237	318
F..67R37 DRN80M	156	448	529	283	364
F..67R37 DRN90S	179	449	543	284	378
F..77R37 DRN71MS	139	363	430	206	273
F..77R37 DRN71M	139	383	450	226	293
F..77R37 DRN80MK	156	394	475	237	318
F..77R37 DRN80M	156	440	521	283	364
F..77R37 DRN90S	179	441	535	284	378
F..77R37 DRN90L	179	473	567	316	410
F..77R37 DRN100L/LM	197	521	615	364	458
F..87R57 DRN80M	156	504	585	276	357
F..87R57 DRN90S	179	505	599	278	371
F..87R57 DRN90L	179	537	631	310	403
F..87R57 DRN100LS	197	533	626	305	399
F..87R57 DRN100L/LM	197	583	676	355	449
F..87R57 DRN112M	221	614	726	386	498

	AC	L	LS	LB	LBS
F..97R57 DRN80M	156	499	580	276	357
F..97R57 DRN90S	179	500	594	278	371
F..97R57 DRN90L	179	532	626	310	403
F..97R57 DRN100LS	197	528	621	305	399
F..97R57 DRN100L/LM	197	578	671	355	449
F..97R57 DRN112M	221	609	721	386	498
F..97R57 DRN132S	221	663	775	440	552
F..107R77 DRN100LS	197	545	639	298	392
F..107R77 DRN100L/LM	197	595	689	348	442
F..107R77 DRN112M	221	626	738	379	491
F..107R77 DRN132S	221	676	788	429	541
F..107R77 DRN132M	261	694	832	447	585
F..107R77 DRN132L	261	720	857	473	610
F..127R77 DRN132S	221	661	773	429	541
F..127R77 DRN132M	261	679	817	447	585
F..127R87 DRN132S	221	704	816	424	536
F..127R87 DRN132M	261	722	860	442	580
F..127R87 DRN132L	261	748	885	468	605
F..127R87 DRN160..	314	814	1003	534	723
F..157R97 DRN132L	261	788	925	463	600
F..157R97 DRN160..	314	854	1043	529	718
F..157R97 DRN180..	357	877	1066	552	741

4.4 K..DRN.. helical-bevel gearmotors

4.4.1 Geometrically possible combinations K..DRN..

K19, n_e = 1400 min^{-1} — **80 Nm**

n_a min^{-1}	M_{amax} Nm	F_{Ra} N	$\varphi_{(/R)}$	i	DRN 63M 63MS 71M 71MS 80MK 80MS	DRN 80M 90S	DRN 63M 63MS 71MS
					2		
23	70	4330	-	58.68			✓
25	70	4330	-	53.88			✓
28	70	4330	-	49.69*			✓
31	69	4340	-	44.48	✓		
34	67	4350	-	40.63	✓		
40	64	4370	-	34.29	✓	✓	
44	80	4260	-	31.74			✓
47	61	4200	-	29.29	✓	✓	
48	80	4120	-	29.14			✓
51	60	4090	-	27.16*	✓	✓	
52	80	3990	-	26.88*			✓
58	80	3820	-	24.06	✓		
63	80	3680	-	21.98	✓		
75	80	3430	-	18.55	✓	✓	
88	80	3210	-	15.84	✓	✓	
95	80	3110	-	14.69	✓	✓	
110	80	2930	-	12.70	✓	✓	
118	79	2850	-	11.84	✓	✓	
135	76	2720	-	10.32*	✓	✓	
146	63	2910	-	9.58	✓		
173	80	2590	-	8.09	✓	✓	
202	80	2420	-	6.91	✓	✓	
218	80	2350	-	6.41*	✓	✓	
252	80	2200	-	5.54	✓	✓	
271	80	2140	-	5.16	✓	✓	
311	80	2010	-	4.50*	✓	✓	

K29, n_e = 1400 min^{-1} — **130 Nm**

n_a min^{-1}	M_{amax} Nm	F_{Ra} N	$\varphi_{(/R)}$	i	DRN 63M 63MS 71M 71MS 80MK 80MS	DRN 80M 90S	DRN 90L	DRN 100LM 100LS	DRN 63M 63MS 71MS
					2				
19	130	4980	-	71.93					✓
21	130	4980	-	66.25*					✓
22	130	4980	-	61.28*					✓
25	130	4980	-	54.89	✓				
27	130	4980	-	50.35*	✓				
32	128	4790	-	42.87	✓	✓			

K29, n_e = 1400 min^{-1}									130 Nm
n_a min^{-1}	M_{amax} Nm	F_{Ra} N	$\varphi_{(/R)}$	i	DRN 63M 63MS 71M 71MS 80MK 80MS	DRN 80M 90S	DRN 90L	DRN 100LM 100LS	DRN 63M 63MS 71MS
35	130	4720	-	38.90					✓
37	122	4560	-	36.96	✓	✓	✓		
39	130	4560	-	35.83					✓
42	130	4410	-	33.15					✓
46	115	4250	-	30.11	✓	✓	✓	✓	
47	130	4210	-	29.69	✓				
51	130	4060	-	27.23	✓				
56	109	3980	-	24.91*	✓	✓	✓	✓	
60	130	3790	-	23.19	✓	✓			
63	105	3820	-	22.08	✓	✓	✓	✓	
70	130	3550	-	19.99	✓	✓	✓		
85	130	3240	-	16.29	✓	✓	✓	✓	
103	130	2970	-	13.47	✓	✓	✓	✓	
117	130	2810	-	11.94	✓	✓	✓	✓	
141	110	3000	-	9.90	✓	✓			
152	130	2470	-	9.17	✓	✓	✓	✓	
164	122	2740	-	8.53	✓	✓	✓		
187	123	2300	-	7.48	✓	✓	✓	✓	
201	112	2580	-	6.95	✓	✓	✓	✓	
243	112	2370	-	5.75	✓	✓	✓	✓	
274	110	2260	-	5.10	✓	✓	✓	✓	
357	126	1910	-	3.92	✓	✓	✓	✓	
438	110	1830	-	3.19	✓	✓	✓	✓	

K37, n_e = 1400 min^{-1}								230 Nm
n_a min^{-1}	M_{amax} Nm	F_{Ra} N	$\varphi_{(/R)}$	i	DRN 63M 63MS 71M 71MS 80MK 80MS	DRN 80M 90S	DRN 90L	DRN 100L 100LM 100LS
					 3			
13	230	4940	7	106.38	✓			
14	230	4940	7	97.81	✓			
16	230	4940	7	83.69	✓	✓		
19	230	4940	7	72.54	✓	✓	✓	
20	230	4940	7	67.80	✓	✓	✓	
23	230	4750	7	58.60	✓	✓	✓	✓
28	230	4380	7	49.79	✓	✓	✓	✓
31	230	4140	7	44.46	✓	✓	✓	✓
36	230	3830	7	37.97	✓	✓	✓	✓
39	230	3700	7	35.57	✓	✓	✓	✓
46	220	3470	7	29.96	✓	✓	✓	✓
48	230	3310	8	28.83	✓	✓		
56	230	3050	8	24.99	✓	✓	✓	
59	230	2940	8	23.36	✓	✓	✓	
69	185	3110	8	20.19	✓	✓	✓	✓
81	180	2900	8	17.15	✓	✓	✓	✓

K37, n_e = 1400 min^{-1} — **230 Nm**

n_a min^{-1}	M_{amax} Nm	F_{Ra} N	$\varphi_{(/R)}$	i	DRN 63M 63MS 71M 71MS 80MK 80MS	DRN 80M 90S	DRN 90L	DRN 100L 100LM 100LS
91	175	2780	9	15.31	✓	✓	✓	✓
107	165	2650	9	13.08	✓	✓	✓	✓
115	160	2600	12	12.14	✓	✓	✓	
133	160	2410	12	10.49	✓	✓	✓	✓
157	160	2200	12	8.91	✓	✓	✓	✓
175	155	2110	13	7.96	✓	✓	✓	✓
205	150	1980	13	6.80	✓	✓	✓	✓
219	145	1950	13	6.37	✓	✓	✓	✓
261	140	1810	13	5.36	✓	✓	✓	✓
351	125	1660	13	3.98	✓	✓	✓	✓

K37R17, n_e = 1400 min^{-1} — **230 Nm**

n_a min^{-1}	M_{amax} Nm	F_{Ra} N	$\varphi_{(/R)}$	i	DRN 63M 63MS 71M 71MS 80MK 80MS	DRN 80M
					3 3	
0.2	230	4940	7	6832	✓	✓
0.23	230	4940	7	5922	✓	✓
0.25	230	4940	7	5491	✓	✓
0.29	230	4940	7	4759	✓	✓
0.33	230	4940	7	4160	✓	✓
0.38	230	4940	7	3645	✓	✓
0.43	230	4940	7	3205	✓	✓
0.49	230	4940	7	2801	✓	✓
0.57	230	4940	7	2454	✓	✓
0.64	230	4940	7	2166	✓	✓
0.74	230	4940	9	1891	✓	✓
0.84	230	4940	7	1660	✓	✓
0.95	230	4940	8	1466	✓	✓
1	230	4940	8	1288	✓	✓
1.2	230	4940	8	1136	✓	✓
					3 2	
1.4	230	4940	7	996	✓	✓
1.5	230	4940	8	876	✓	✓
1.8	230	4940	7	761	✓	✓
2	230	4940	7	671	✓	✓
2.3	230	4940	7	585	✓	✓
2.7	230	4940	7	512	✓	✓
3.1	230	4940	8	451	✓	✓
3.5	230	4940	9	396	✓	✓
4	230	4940	9	346	✓	✓
4.6	220	5030	8	304	✓	✓
5.2	230	4940	8	267	✓	✓
5.9	230	4940	8	234	✓	✓
6.8	230	4940	8	205	✓	✓

K37R17, n_e = 1400 min^{-1} — **230 Nm**

n_a min^{-1}	M_{amax} Nm	F_{Ra} N	$\varphi_{(/R)}$	i	DRN 63M 63MS 71M 71MS 80MK 80MS	DRN 80M
7.7	230	4940	8	181	✓	✓
8.7	230	4940	8	160	✓	✓
10	230	4940	8	136	✓	✓
11	230	4940	9	127	✓	✓
12	230	4940	9	110	✓	✓
14	230	4940	9	96	✓	✓

K39, n_e = 1400 min^{-1} — **300 Nm**

n_a min^{-1}	M_{amax} Nm	F_{Ra} N	$\varphi_{(/R)}$	i	DRN 63M 63MS 71M 71MS 80MK 80MS	DRN 80M 90S	DRN 90L	DRN 100L 100LM 100LS	DRN 112M
					 2				
24	300	7500	-	58.24*	✓				
28	300	7440	-	49.69	✓	✓			
32	300	7000	-	43.45	✓	✓	✓		
33	300	6840	-	41.28*	✓	✓	✓		
38	300	6440	-	36.22	✓	✓	✓	✓	
45	300	5960	-	30.72*	✓	✓	✓	✓	✓
50	300	5670	-	27.73	✓	✓	✓	✓	✓
57	300	5330	-	24.40*	✓	✓	✓	✓	✓
60	300	5180	-	23.04*	✓	✓	✓	✓	✓
71	295	4820	-	19.62	✓	✓	✓	✓	✓
78	290	4630	-	17.83	✓	✓	✓	✓	✓
90	280	4380	-	15.44	✓	✓	✓	✓	✓
104	270	4160	-	13.44*		✓	✓	✓	✓
109	250	4930	-	12.73	✓	✓	✓		
115	255	4790	-	12.09*	✓	✓	✓		
131	285	4360	-	10.61	✓	✓	✓	✓	
155	300	3950	-	9.00*	✓	✓	✓	✓	✓
172	300	3760	-	8.12*	✓	✓	✓	✓	✓
195	300	3530	-	7.15*	✓	✓	✓	✓	✓
207	300	3430	-	6.75*	✓	✓	✓	✓	✓
243	275	3310	-	5.75	✓	✓	✓	✓	✓
268	260	3240	-	5.22	✓	✓	✓	✓	✓
309	240	3130	-	4.52	✓	✓	✓	✓	✓
355	215	3070	-	3.94*		✓	✓	✓	✓
498	170	2870	-	2.81*		✓	✓	✓	✓

K39R17, n_e = 1400 min^{-1} — **300 Nm**

n_a min^{-1}	M_{amax} Nm	F_{Ra} N	$\varphi_{(/R)}$	i	DRN 63M 63MS 71M 71MS 80MK 80MS	DRN 80M
					2 3	
0.34	300	7500	-	4057	✓	✓
0.41	300	7500	-	3370	✓	✓
0.48	300	7500	-	2906	✓	✓
0.55	300	7500	-	2508	✓	✓
0.59	300	7500	-	2367	✓	✓
0.64	300	7500	-	2162	✓	✓
0.74	300	7500	-	1881	✓	✓
0.79	300	7500	-	1762	✓	✓
0.86	300	7500	-	1622	✓	✓
0.93	300	7500	-	1494	✓	✓
1	300	7500	-	1321	✓	✓
1.1	300	7500	-	1169	✓	✓
1.2	300	7500	-	1093	✓	✓
					2 2	
1.4	300	7500	-	956	✓	
1.7	300	7500	-	814	✓	✓
1.9	300	7500	-	711	✓	
2.3	300	7500	-	605	✓	✓
2.7	300	7500	-	504	✓	✓
3	300	7500	-	454	✓	✓
3.5	300	7500	-	399	✓	✓
3.8	300	7500	-	365	✓	✓
4.4	300	7500	-	312	✓	✓
4.6	300	7500	-	299	✓	✓
5.5	300	7500	-	254	✓	✓
5.9	300	7500	-	234	✓	✓
6.6	300	7500	-	210	✓	✓
7.4	300	7500	-	189	✓	✓
8	300	7500	-	174	✓	✓
8.9	300	7500	-	156	✓	✓
9.8	300	7500	-	142	✓	✓
11	300	7500	-	117	✓	✓
18	295	7500	-	75	✓	✓

K47, n_e = 1400 min^{-1} — **450 Nm**

n_a min^{-1}	M_{amax} Nm	F_{Ra} N	$\varphi_{(/R)}$	i	DRN 63M 63MS 71M 71MS 80MK 80MS	DRN 80M 90S	DRN 90L	DRN 100L 100LM 100LS
					3			
10	450	8250	6	131.87*	✓			
11	450	8250	6	121.48*	✓			
13	450	8250	6	104.37	✓	✓		
15	450	8250	6	90.86	✓	✓	✓	

K47, n_e = 1400 min^{-1} — **450 Nm**

n_a min^{-1}	M_{amax} Nm	F_{Ra} N	$\varphi_{(/R)}$	i	DRN 63M 63MS 71M 71MS 80MK 80MS	DRN 80M 90S	DRN 90L	DRN 100L 100LM 100LS
16	450	8250	6	85.12*	✓	✓	✓	
18	450	8030	6	75.20*	✓	✓	✓	✓
20	450	7750	6	69.84	✓	✓	✓	
22	450	7400	7	63.30*	✓	✓	✓	✓
24	450	7020	7	56.83	✓	✓	✓	✓
28	450	6520	7	48.95*	✓	✓	✓	✓
30	450	6320	7	46.03*	✓	✓	✓	✓
35	450	5850	7	39.61	✓	✓	✓	✓
39	450	5510	7	35.39	✓	✓	✓	✓
44	450	5150	7	31.30	✓	✓	✓	
47	450	4970	8	29.32	✓	✓	✓	
54	450	4640	8	25.91	✓	✓	✓	✓
58	450	4440	8	24.06	✓	✓	✓	
64	450	4190	8	21.81	✓	✓	✓	✓
71	430	4080	8	19.58	✓	✓	✓	✓
83	415	3830	8	16.86	✓	✓	✓	✓
88	405	3770	8	15.86	✓	✓	✓	✓
102	390	3550	8	13.65	✓	✓	✓	✓
114	375	3420	8	12.19	✓	✓	✓	✓
118	280	3930	10	11.77	✓	✓	✓	✓
132	280	3710	11	10.56	✓	✓	✓	✓
153	280	3430	11	9.10	✓	✓	✓	✓
163	270	3390	11	8.56	✓	✓	✓	✓
190	250	3280	11	7.36	✓	✓	✓	✓
212	240	3160	12	6.58	✓	✓	✓	✓
240	230	3040	12	5.81	✓	✓	✓	✓
301	205	2920	12	4.64		✓	✓	✓

K47R37, n_e = 1400 min^{-1} — **450 Nm**

n_a min^{-1}	M_{amax} Nm	F_{Ra} N	$\varphi_{(/R)}$	i	DRN 63M 63MS 71M 71MS 80MK 80MS	DRN 80M 90S	DRN 90L	DRN 100L 100LM 100LS
					3 3			
0.13	450	8250	7	10138	✓			
0.16	450	8250	7	8534	✓			
0.18	450	8250	7	7662	✓			
0.2	450	8250	7	6826	✓	✓	✓	
0.23	450	8250	7	5983	✓	✓		
0.27	450	8250	7	5159	✓	✓	✓	
0.3	450	8250	7	4601	✓	✓	✓	✓
0.35	450	8250	7	3940	✓	✓	✓	
0.4	450	8250	7	3477	✓	✓	✓	✓
0.46	450	8250	7	3043	✓	✓	✓	
0.51	450	8250	7	2733	✓	✓	✓	
0.59	450	8250	7	2354	✓	✓	✓	

K47R37, n_e = 1400 min^{-1} — **450 Nm**

n_a min^{-1}	M_{amax} Nm	F_{Ra} N	$\varphi_{(/R)}$	i	DRN 63M 63MS 71M 71MS 80MK 80MS	DRN 80M 90S	DRN 90L	DRN 100L 100LM 100LS
0.67	450	8250	7	2063	✓	✓	✓	
0.76	450	8250	7	1819	✓	✓	✓	✓
0.88	450	8250	7	1586	✓	✓	✓	✓
1	450	8250	7	1388	✓	✓	✓	✓
					3 2			
1.1	450	8250	7	1222	✓	✓	✓	
1.2	450	8250	7	1097	✓	✓	✓	
1.4	450	8250	7	945	✓	✓	✓	
1.6	450	8250	7	831	✓	✓	✓	
1.9	450	8250	7	718	✓	✓	✓	✓
2.1	450	8250	7	639	✓	✓	✓	
2.5	450	8250	7	552	✓	✓	✓	✓
2.8	450	8250	7	495	✓	✓	✓	✓
3.2	450	8250	7	426	✓	✓	✓	✓
3.7	450	8250	7	375	✓	✓	✓	✓
4.2	450	8250	7	327	✓	✓	✓	✓
4.8	450	8250	9	289	✓	✓	✓	✓
5.4	450	8250	7	256	✓	✓	✓	✓
6.2	450	8250	7	225	✓	✓	✓	✓
7	450	8250	7	198	✓	✓	✓	✓
8.1	450	8250	7	171	✓	✓	✓	✓
9.1	450	8250	8	153	✓	✓	✓	✓
10	450	8250	9	131	✓	✓	✓	✓
12	450	8250	9	112	✓	✓	✓	✓
14	430	8400	9	99	✓	✓	✓	✓
14	450	8250	9	94	✓	✓	✓	✓

K49, n_e = 1400 min^{-1} — **500 Nm**

n_a min^{-1}	M_{amax} Nm	F_{Ra} N	$\varphi_{(/R)}$	i	DRN 63M 63MS 71M 71MS 80MK 80MS	DRN 80M 90S	DRN 90L	DRN 100L 100LM 100LS	DRN 112M	DRN 132M 132S
						2				
18	475	9000	-	75.20*	✓					
19	445	9000	-	70.19	✓					
23	500	9000	-	60.27	✓	✓				
26	500	8590	-	52.94	✓	✓	✓			
27	500	8380	-	50.29*	✓	✓	✓			
31	500	7900	-	44.44	✓	✓	✓	✓		
36	500	7310	-	37.98*	✓	✓	✓	✓	✓	
40	500	7000	-	34.81	✓	✓	✓	✓	✓	
45	500	6550	-	30.55*	✓	✓	✓	✓	✓	✓
48	500	6370	-	28.95*	✓	✓	✓	✓	✓	✓
55	500	5940	-	25.34	✓	✓	✓	✓	✓	✓
61	500	5610	-	22.83	✓	✓	✓	✓	✓	✓
69	500	5220	-	20.03	✓	✓	✓	✓	✓	✓

K49, n_e = 1400 min^{-1} — **500 Nm**

n_a min^{-1}	M_{amax} Nm	F_{Ra} N	$\varphi_{(/R)}$	i	DRN 63M 63MS 71M 71MS 80MK 80MS	DRN 80M 90S	DRN 90L	DRN 100L 100LM 100LS	DRN 112M	DRN 132M 132S
79	500	4860	-	17.67*		✓	✓	✓	✓	✓
89	490	4590	-	15.67		✓	✓	✓	✓	✓
104	470	4320	-	13.38		✓	✓	✓	✓	✓
123	495	5000	-	11.37*	✓	✓	✓	✓	✓	
134	480	4860	-	10.42	✓	✓	✓	✓	✓	
153	500	4460	-	9.14*	✓	✓	✓	✓	✓	✓
161	500	4340	-	8.66*	✓	✓	✓	✓	✓	✓
184	500	4050	-	7.58	✓	✓	✓	✓	✓	✓
204	500	3840	-	6.83	✓	✓	✓	✓	✓	✓
233	500	3570	-	5.99	✓	✓	✓	✓	✓	✓
264	485	3400	-	5.29*		✓	✓	✓	✓	✓
298	465	3270	-	4.69*		✓	✓	✓	✓	✓
350	440	3110	-	4.00		✓	✓	✓	✓	✓

K49R37, n_e = 1400 min^{-1} — **500 Nm**

n_a min^{-1}	M_{amax} Nm	F_{Ra} N	$\varphi_{(/R)}$	i	DRN 63M 63MS 71M 71MS 80MK 80MS	DRN 80M 90S	DRN 90L	DRN 100L 100LM 100LS
					2 3			
0.19	500	9000	-	7137	✓			
0.23	500	9000	-	5991	✓			
0.27	500	9000	-	5120	✓			
0.34	500	9000	-	4034	✓	✓	✓	
0.39	500	9000	-	3580	✓			
0.45	500	9000	-	3081	✓	✓	✓	
0.5	500	9000	-	2773	✓	✓	✓	
0.55	500	9000	-	2545	✓	✓	✓	
0.59	500	9000	-	2372	✓	✓	✓	
0.66	500	9000	-	2118	✓	✓		
0.72	500	9000	-	1941	✓	✓		
0.8	500	9000	-	1741	✓	✓	✓	✓
0.85	500	9000	-	1632	✓	✓	✓	
0.92	500	9000	-	1521	✓	✓	✓	✓
1.1	500	9000	-	1228	✓	✓	✓	✓
1.4	500	9000	-	1000	✓	✓	✓	✓
					2 2			
0.98	500	9000	-	1424	✓			
1	500	9000	-	1309	✓			
1.2	500	9000	-	1120	✓	✓		
1.5	500	9000	-	908	✓	✓	✓	
1.7	500	9000	-	802	✓	✓	✓	
1.9	500	9000	-	701	✓	✓	✓	✓
2.1	500	9000	-	645	✓	✓		
2.3	500	9000	-	595	✓	✓	✓	✓
2.5	500	9000	-	543	✓	✓	✓	✓

K49R37, n_e = 1400 min^{-1} — **500 Nm**

n_a min^{-1}	M_{amax} Nm	F_{Ra} N	$\varphi_{(/R)}$	i	DRN 63M 63MS 71M 71MS 80MK 80MS	DRN 80M 90S	DRN 90L	DRN 100L 100LM 100LS
2.7	500	9000	-	501	✓	✓	✓	✓
3.1	500	9000	-	449	✓	✓	✓	✓
3.4	500	9000	-	401	✓	✓	✓	✓
3.8	500	9000	-	360	✓	✓	✓	✓
4.2	500	9000	-	330	✓	✓	✓	✓
4.6	500	9000	-	300	✓	✓	✓	✓
5.1	500	9000	-	274	✓	✓	✓	✓
5.7	500	9000	-	243	✓	✓	✓	✓
6.4	500	9000	-	217	✓	✓	✓	✓
7.2	500	9000	-	193	✓	✓	✓	✓
7.9	500	9000	-	176	✓	✓	✓	✓
9.2	500	9000	-	152	✓	✓	✓	✓
11	500	9000	-	125	✓	✓	✓	✓
14	500	9000	-	99	✓	✓	✓	✓

K57, n_e = 1400 min^{-1} — **630 Nm**

n_a min^{-1}	M_{amax} Nm	F_{Ra} N	$\varphi_{(/R)}$	i	DRN 63M 63MS 71M 71MS 80MK 80MS	DRN 80M 90S	DRN 90L	DRN 100L 100LM 100LS	DRN 112M	DRN 132M 132S
						 3				
9.6	630	7380	6	145.14*	✓					
11	630	7380	6	123.85	✓	✓				
12	630	7380	6	108.29	✓	✓	✓			
13	630	7380	6	102.88*	✓	✓	✓			
15	630	7380	6	90.26*	✓	✓	✓	✓		
18	630	7380	6	76.56*	✓	✓	✓	✓	✓	
20	630	7380	6	69.12	✓	✓	✓	✓	✓	
23	630	7380	6	60.81*	✓	✓	✓	✓	✓	✓
24	630	7380	6	57.42*	✓	✓	✓	✓	✓	✓
28	630	7380	6	48.89	✓	✓	✓	✓	✓	✓
31	630	7380	6	44.43	✓	✓	✓	✓	✓	✓
36	630	7380	6	38.49	✓	✓	✓	✓	✓	✓
39	630	7380	7	35.70	✓	✓	✓	✓		
46	630	7110	7	30.28	✓	✓	✓	✓	✓	
51	630	6730	7	27.34	✓	✓	✓	✓	✓	
58	615	6380	7	24.05	✓	✓	✓	✓	✓	✓
61	600	6280	7	22.71	✓	✓	✓	✓	✓	✓
72	575	5910	7	19.34	✓	✓	✓	✓	✓	✓
79	555	5740	7	17.57	✓	✓	✓	✓	✓	✓
91	535	5430	7	15.22	✓	✓	✓	✓	✓	✓
105	510	5190	7	13.25		✓	✓	✓	✓	✓
117	415	5150	9	11.92	✓	✓	✓	✓	✓	✓
124	415	4990	9	11.26	✓	✓	✓	✓	✓	✓
145	405	4650	10	9.59	✓	✓	✓	✓	✓	✓
160	390	4520	10	8.71	✓	✓	✓	✓	✓	✓

K57, n_e = 1400 min^{-1} — **630 Nm**

n_a min^{-1}	M_{amax} Nm	F_{Ra} N	$\varphi_{(/R)}$	i	DRN 63M 63MS 71M 71MS 80MK 80MS	DRN 80M 90S	DRN 90L	DRN 100L 100LM 100LS	DRN 112M	DRN 132M 132S
185	365	4360	10	7.55	✓	✓	✓	✓	✓	✓
213	345	4190	10	6.57		✓	✓	✓	✓	✓
298	300	3800	11	4.69		✓	✓	✓	✓	✓

K57R37, n_e = 1400 min^{-1} — **630 Nm**

n_a min^{-1}	M_{amax} Nm	F_{Ra} N	$\varphi_{(/R)}$	i	DRN 63M 63MS 71M 71MS 80MK 80MS	DRN 80M 90S	DRN 90L	DRN 100L 100LM 100LS
					3 3			
0.11	630	7380	6	12169	✓			
0.12	630	7380	6	11162	✓			
0.14	630	7380	6	9503	✓	✓		
0.16	630	7380	6	8547	✓			
0.19	630	7380	6	7277	✓	✓		
0.21	630	7380	6	6478	✓	✓	✓	
0.24	630	7380	6	5662	✓	✓	✓	✓
0.27	630	7380	6	5033	✓	✓		
0.32	630	7380	6	4340	✓	✓	✓	
0.36	630	7380	6	3854	✓	✓		
0.41	630	7380	6	3390	✓	✓	✓	
0.47	630	7380	6	2924	✓	✓	✓	
0.53	630	7380	6	2593	✓	✓	✓	✓
0.62	630	7380	6	2249	✓	✓	✓	✓
0.7	630	7380	6	1986	✓	✓	✓	✓
					3 2			
0.8	630	7380	6	1743	✓	✓	✓	
0.9	630	7380	6	1539	✓	✓		
1	630	7380	6	1354	✓	✓		
1.1	630	7380	6	1174	✓	✓	✓	
1.3	630	7380	6	1036	✓	✓	✓	
1.5	630	7380	6	906	✓	✓	✓	✓
1.7	630	7380	6	806	✓	✓	✓	✓
2	630	7380	6	699	✓	✓	✓	✓
2.2	630	7380	6	615	✓	✓	✓	✓
2.5	630	7380	6	544	✓	✓	✓	✓
2.9	630	7380	7	473	✓	✓	✓	✓
3.3	630	7380	7	421	✓	✓	✓	✓
3.8	630	7380	8	362	✓	✓	✓	✓
4.3	615	7510	8	319	✓	✓	✓	✓
5	630	7380	6	280	✓	✓	✓	✓
5.6	630	7380	6	246	✓	✓	✓	✓
6.5	600	7630	8	215	✓	✓	✓	✓
7.2	630	7380	7	192	✓	✓	✓	✓
8.4	630	7380	7	166	✓	✓	✓	✓
9.6	630	7380	8	145	✓	✓	✓	✓

K57R37, n_e = 1400 min^{-1}								630 Nm
n_a min^{-1}	M_{amax} Nm	F_{Ra} N	$\varphi_{(/R)}$	i	DRN 63M 63MS 71M 71MS 80MK 80MS	DRN 80M 90S	DRN 90L	DRN 100L 100LM 100LS
10	600	7630	8	129	✓	✓	✓	✓
12	630	7380	8	111	✓	✓	✓	✓
14	615	7510	8	97	✓	✓	✓	✓

K67, n_e = 1400 min^{-1}										870 Nm
n_a min^{-1}	M_{amax} Nm	F_{Ra} N	$\varphi_{(/R)}$	i	DRN 63M 63MS 71M 71MS 80MK 80MS	DRN 80M 90S	DRN 90L	DRN 100L 100LM 100LS	DRN 112M	DRN 132M 132S
						 3				
9.6	870	9840	6	144.79*	✓					
11	870	9840	6	123.54	✓	✓				
12	870	9840	6	108.03	✓	✓	✓			
13	870	9840	6	102.62	✓	✓	✓			
15	870	9840	6	90.04	✓	✓	✓	✓		
18	870	9840	6	76.37	✓	✓	✓	✓	✓	
20	870	9840	6	68.95	✓	✓	✓	✓	✓	
23	870	9840	6	60.66	✓	✓	✓	✓	✓	✓
24	870	9840	6	57.28	✓	✓	✓	✓	✓	✓
28	850	10000	6	48.77	✓	✓	✓	✓	✓	✓
31	830	10200	6	44.32	✓	✓	✓	✓	✓	✓
36	800	10500	6	38.39	✓	✓	✓	✓	✓	✓
39	870	9840	7	35.62	✓	✓	✓	✓		
46	870	9840	7	30.22	✓	✓	✓	✓	✓	
51	820	10300	7	27.28	✓	✓	✓	✓	✓	
58	800	10500	7	24.00	✓	✓	✓	✓	✓	✓
61	780	10700	7	22.66	✓	✓	✓	✓	✓	✓
72	760	10800	7	19.30	✓	✓	✓	✓	✓	✓
79	740	11000	7	17.54	✓	✓	✓	✓	✓	✓
92	700	11300	8	15.19	✓	✓	✓	✓	✓	✓
105	670	11500	8	13.22		✓	✓	✓	✓	✓
112	530	12300	9	12.48	✓	✓	✓	✓	✓	✓
131	500	11800	9	10.63	✓	✓	✓	✓	✓	✓
144	480	11500	9	9.66	✓	✓	✓	✓	✓	✓
167	440	11100	9	8.37	✓	✓	✓	✓	✓	✓
192	420	10700	9	7.28		✓	✓	✓	✓	✓
269	350	9870	10	5.20		✓	✓	✓	✓	✓

K67R37, n_e = 1400 min^{-1} **870 Nm**

n_a min^{-1}	M_{amax} Nm	F_{Ra} N	$\varphi_{(/R)}$	i	DRN 63M 63MS 71M 71MS 80MK 80MS	DRN 80M 90S	DRN 90L	DRN 100L 100LM 100LS
					 3 3			
0.11	870	9840	6	12139	✓			
0.12	870	9840	6	11134	✓			
0.14	870	9840	6	9479	✓	✓		
0.17	870	9840	6	8173	✓	✓	✓	
0.19	870	9840	6	7259	✓	✓		
0.21	870	9840	6	6462	✓	✓	✓	
0.24	870	9840	6	5648	✓	✓	✓	✓
0.28	870	9840	7	4846	✓	✓	✓	
0.32	870	9840	6	4329	✓	✓	✓	
0.37	830	10200	7	3750	✓	✓	✓	
0.42	870	9840	6	3315	✓	✓	✓	
0.47	870	9840	7	2917	✓	✓	✓	
0.55	870	9840	6	2532	✓	✓	✓	
0.62	870	9840	7	2244	✓	✓	✓	✓
0.7	870	9840	6	1981	✓	✓	✓	✓
					 3 2			
0.8	870	9840	6	1739	✓	✓	✓	
0.91	870	9840	6	1535	✓	✓		
1	870	9840	7	1351	✓	✓		
1.1	870	9840	7	1171	✓	✓	✓	
1.3	870	9840	7	1034	✓	✓	✓	
1.5	870	9840	6	903	✓	✓	✓	✓
1.7	870	9840	8	793	✓	✓		
2	870	9840	6	697	✓	✓	✓	✓
2.2	870	9840	7	613	✓	✓	✓	✓
2.5	870	9840	7	542	✓	✓	✓	✓
2.9	870	9840	8	471	✓	✓	✓	✓
3.3	830	10200	7	420	✓	✓	✓	✓
3.8	820	10300	8	361	✓	✓	✓	✓
4.3	820	10300	8	323	✓	✓	✓	✓
5	870	9840	7	279	✓	✓	✓	✓
5.6	870	9840	7	246	✓	✓	✓	✓
6.4	820	10300	8	217	✓	✓	✓	✓
7.3	830	10200	7	191	✓	✓	✓	✓
8.4	850	10000	7	166	✓	✓	✓	✓
9.7	870	9840	8	144	✓	✓	✓	✓
11	870	9840	8	122	✓	✓	✓	✓

K77, n_e = 1400 min^{-1} — **1550 Nm**

n_a min^{-1}	M_{amax} Nm	F_{Ra} N	$\varphi_{(/R)}$	i	DRN 63M 63MS 71M 71MS 80MK 80MS	DRN 80M 90S	DRN 90L	DRN 100L 100LM 100LS	DRN 112M	DRN 132M 132S	DRN 132L 160L 160M
					 3						
7.2	1450	16100	5	192.18	✓						
7.8	1450	16100	5	179.37	✓						
9	1550	15400	5	154.02	✓	✓					
10	1550	15400	5	135.28	✓	✓	✓				
10	1550	15400	5	128.52	✓	✓	✓				
12	1550	15400	5	113.56	✓	✓	✓	✓			
14	1550	15400	5	97.05	✓	✓	✓	✓	✓		
15	1550	15400	5	88.97	✓	✓	✓	✓	✓		
17	1550	15400	5	78.07	✓	✓	✓	✓	✓	✓	
18	1550	15400	5	73.99	✓	✓	✓	✓	✓	✓	
21	1550	15400	5	64.75	✓	✓	✓	✓	✓	✓	
23	1550	15400	6	58.34	✓	✓	✓	✓	✓	✓	✓
27	1550	15400	6	51.18	✓	✓	✓	✓	✓	✓	✓
31	1550	15400	6	45.16		✓	✓	✓	✓	✓	✓
34	1550	15400	6	40.04		✓	✓	✓	✓	✓	✓
36	1500	15700	6	38.39	✓	✓	✓	✓	✓		
39	1550	15400	6	35.20	✓	✓	✓	✓	✓		
45	1550	15400	6	30.89	✓	✓	✓	✓	✓	✓	
47	1550	15400	6	29.27	✓	✓	✓	✓	✓	✓	
54	1550	15400	6	25.62	✓	✓	✓	✓	✓	✓	
60	1550	15400	6	23.08	✓	✓	✓	✓	✓	✓	✓
69	1500	15700	6	20.25	✓	✓	✓	✓	✓	✓	✓
78	1450	16100	6	17.87		✓	✓	✓	✓	✓	✓
88	1400	15500	6	15.84		✓	✓	✓	✓	✓	✓
103	1340	14800	7	13.52		✓	✓	✓	✓	✓	✓
113	1000	15100	8	12.36	✓	✓	✓	✓	✓	✓	✓
129	990	14400	8	10.84	✓	✓	✓	✓	✓	✓	✓
146	940	13900	8	9.56		✓	✓	✓	✓	✓	✓
165	890	13500	8	8.48		✓	✓	✓	✓	✓	✓
193	820	13100	8	7.24		✓	✓	✓	✓	✓	✓

K77R37, n_e = 1400 min^{-1} — **1550 Nm**

n_a min^{-1}	M_{amax} Nm	F_{Ra} N	$\varphi_{(/R)}$	i	DRN 63M 63MS 71M 71MS 80MK 80MS	DRN 80M 90S	DRN 90L	DRN 100L 100LM 100LS
					 3 3			
0.09	1550	15400	6	15310	✓			
0.09	1550	15400	6	14043	✓			
0.11	1550	15400	6	11955	✓	✓		
0.13	1550	15400	6	10217	✓	✓		
0.15	1550	15400	6	8809	✓	✓	✓	
0.18	1550	15400	6	7528	✓	✓	✓	
0.21	1550	15400	6	6606	✓	✓	✓	
0.24	1550	15400	6	5774	✓	✓	✓	✓

K77R37, n_e = 1400 min^{-1} — **1550 Nm**

n_a min^{-1}	M_{amax} Nm	F_{Ra} N	$\varphi_{(/R)}$	i	DRN 63M 63MS 71M 71MS 80MK 80MS	DRN 80M 90S	DRN 90L	DRN 100L 100LM 100LS
0.27	1550	15400	6	5089	✓	✓	✓	
0.31	1550	15400	6	4489	✓	✓	✓	
0.35	1550	15400	6	3961	✓	✓	✓	✓
0.4	1550	15400	6	3485	✓	✓	✓	✓
0.48	1550	15400	6	2901	✓	✓	✓	
0.51	1550	15400	6	2717	✓	✓	✓	
0.59	1550	15400	6	2370	✓	✓	✓	✓
					 3 2			
0.68	1550	15400	6	2050	✓	✓	✓	
0.79	1550	15400	6	1772	✓	✓	✓	✓
0.92	1550	15400	6	1514	✓	✓	✓	✓
1	1550	15400	6	1388	✓	✓	✓	✓
1.1	1550	15400	6	1218	✓	✓	✓	✓
1.3	1550	15400	6	1053	✓	✓	✓	
1.5	1550	15400	6	924	✓	✓	✓	
1.7	1550	15400	6	815	✓	✓	✓	
1.9	1550	15400	6	709	✓	✓	✓	✓
2.2	1550	15400	6	622	✓	✓	✓	✓
2.5	1550	15400	6	552	✓	✓	✓	✓
2.8	1550	15400	6	485	✓	✓	✓	✓
3.2	1550	15400	6	428	✓	✓	✓	✓
3.8	1550	15400	6	367	✓	✓	✓	✓
4.2	1550	15400	6	328	✓	✓	✓	✓
4.8	1550	15400	6	290	✓	✓	✓	✓
5.5	1550	15400	6	252	✓	✓	✓	✓
6.3	1550	15400	6	221	✓	✓	✓	✓
7.1	1550	15400	6	195	✓	✓	✓	✓
8	1550	15400	6	175	✓	✓	✓	✓
9	1550	15400	6	154	✓	✓	✓	✓

K87, n_e = 1400 min^{-1} — **2700 Nm**

n_a min^{-1}	M_{amax} Nm	F_{Ra} N	$\varphi_{(/R)}$	i	DRN 71M 80MK 80MS	DRN 80M 90S	DRN 90L	DRN 100L 100LM 100LS	DRN 112M	DRN 132M 132S	DRN 132L 160L 160M	DRN 180L 180M	DRN 200L
							 3						
7	2700	27300	5	197.37	✓	✓							
8	2700	27300	5	174.19	✓	✓	✓						
8.5	2700	27300	5	164.34*	✓	✓	✓						
9.5	2700	27300	5	147.32*	✓	✓	✓	✓					
11	2700	27300	5	126.91*	✓	✓	✓	✓	✓				
12	2700	27300	5	115.82	✓	✓	✓	✓	✓				
13	2700	27300	5	102.71*	✓	✓	✓	✓	✓	✓			
16	2700	27300	5	86.34	✓	✓	✓	✓	✓	✓			
17	2700	27300	5	79.34	✓	✓	✓	✓	✓	✓	✓		
19	2700	27300	5	70.46	✓	✓	✓	✓	✓	✓	✓		
22	2700	26200	5	63.00*		✓	✓	✓	✓	✓	✓	✓	
24	2700	25000	5	56.64		✓	✓	✓	✓	✓	✓	✓	
28	2700	23500	5	49.16		✓	✓	✓	✓	✓	✓	✓	✓

K87, n_e = 1400 min^{-1} — **2700 Nm**

n_a min^{-1}	M_{amax} Nm	F_{Ra} N	$\varphi_{(/R)}$	i	DRN 71M 80MK 80MS	DRN 80M 90S	DRN 90L	DRN 100L 100LM 100LS	DRN 112M	DRN 132M 132S	DRN 132L 160L 160M	DRN 180L 180M	DRN 200L
31	2600	22800	6	44.02				✓	✓	✓	✓	✓	✓
38	2500	21400	6	36.52*				✓	✓	✓	✓	✓	✓
44	2700	19200	6	31.39	✓	✓	✓	✓	✓	✓	✓		
50	2600	18500	6	27.88	✓	✓	✓	✓	✓	✓	✓		
56	2500	18000	6	24.92		✓	✓	✓	✓	✓	✓	✓	
62	2300	17900	6	22.41		✓	✓	✓	✓	✓	✓	✓	
71	2300	16800	6	19.45		✓	✓	✓	✓	✓	✓	✓	✓
80	2200	16300	6	17.42				✓	✓	✓	✓	✓	✓
87	1800	16000	6	16.00	✓	✓	✓	✓	✓	✓	✓		
96	2100	15300	6	14.45				✓	✓	✓	✓	✓	✓
111	2000	14800	6	12.56						✓	✓	✓	✓
125	1500	14900	7	11.17		✓	✓	✓	✓	✓	✓	✓	✓
140	1500	14200	7	10.00				✓	✓	✓	✓	✓	✓
168	1400	13500	7	8.29				✓	✓	✓	✓	✓	✓
194	1300	13200	7	7.21						✓	✓	✓	✓

K87R57, n_e = 1400 min^{-1} — **2700 Nm**

n_a min^{-1}	M_{amax} Nm	F_{Ra} N	$\varphi_{(/R)}$	i	DRN 63M 63MS 71M 71MS 80MK 80MS	DRN 80M 90S	DRN 90L	DRN 100L 100LM 100LS	DRN 112M	DRN 132M 132S
						3 3				
0.09	2700	27300	6	14829	✓					
0.1	2700	27300	6	13168	✓					
0.11	2700	27300	6	11737	✓	✓				
0.13	2700	27300	6	10217	✓	✓	✓			
0.15	2700	27300	6	9073	✓	✓	✓			
0.17	2700	27300	6	7854	✓	✓	✓			
0.2	2700	27300	6	6832	✓	✓	✓			
0.23	2700	27300	6	5930	✓	✓	✓			
0.26	2700	27300	6	5240	✓	✓	✓	✓		
0.3	2700	27300	6	4562	✓	✓	✓	✓	✓	
0.34	2700	27300	6	4037	✓	✓	✓	✓		
0.38	2700	27300	6	3609	✓	✓	✓	✓		
0.45	2700	27300	7	3107	✓	✓	✓			
0.51	2700	27300	6	2728	✓	✓	✓	✓	✓	
0.59	2700	27300	6	2371	✓	✓	✓	✓	✓	
						3 2				
0.67	2700	27300	6	2088	✓	✓	✓			
0.75	2700	27300	6	1854	✓	✓	✓			
0.84	2700	27300	6	1657	✓	✓	✓			
0.98	2700	27300	6	1415	✓	✓	✓			
1.1	2700	27300	6	1229	✓	✓	✓			
1.2	2700	27300	6	1078	✓	✓	✓	✓		
1.4	2700	27300	6	951	✓	✓	✓	✓	✓	
1.6	2700	27300	6	837	✓	✓	✓	✓	✓	✓
1.9	2700	27300	6	726	✓	✓	✓	✓	✓	✓
2.1	2700	27300	6	638	✓	✓	✓	✓	✓	
2.4	2700	27300	6	562	✓	✓	✓	✓	✓	✓

K87R57, n_e = 1400 min^{-1} — **2700 Nm**

n_a min^{-1}	M_{amax} Nm	F_{Ra} N	$\varphi_{(/R)}$	i	DRN 63M 63MS 71M 71MS 80MK 80MS	DRN 80M 90S	DRN 90L	DRN 100L 100LM 100LS	DRN 112M	DRN 132M 132S
2.9	2700	27300	6	474	✓	✓	✓	✓	✓	✓
3.2	2700	27300	6	426	✓	✓	✓	✓	✓	✓
3.7	2700	27300	7	373	✓	✓	✓	✓	✓	✓
4.2	2700	27300	6	330	✓	✓	✓	✓	✓	✓
4.7	2700	27300	7	294	✓	✓	✓	✓	✓	✓
5.6	2700	27300	7	250	✓	✓	✓	✓	✓	✓
5.9	2700	27300	7	236	✓	✓	✓	✓	✓	✓
6.9	2700	27300	7	201	✓	✓	✓	✓	✓	✓
7.6	2700	27300	7	183	✓	✓	✓	✓	✓	✓
8.8	2700	27300	7	159	✓	✓	✓	✓	✓	✓
9.9	2600	27400	7	141	✓	✓	✓	✓	✓	✓

K97, n_e = 1400 min^{-1} — **4300 Nm**

n_a min^{-1}	M_{amax} Nm	F_{Ra} N	$\varphi_{(/R)}$	i	DRN 80M 90S	DRN 90L	DRN 100L 100LM 100LS	DRN 112M	DRN 132M 132S	DRN 132L 160L 160M	DRN 180L 180M	DRN 200L 225S
							 3					
7.9	4300	40000	7	176.05*	✓	✓	✓					
9.1	4300	40000	7	153.21*	✓	✓	✓	✓				
9.9	4300	40000	7	140.28	✓	✓	✓	✓				
11	4300	40000	7	123.93*	✓	✓	✓	✓	✓			
13	4300	40000	7	105.13	✓	✓	✓	✓	✓			
14	4300	40000	7	96.80	✓	✓	✓	✓	✓	✓		
16	4300	38800	7	86.52	✓	✓	✓	✓	✓	✓		
17	4300	37100	7	77.89*	✓	✓	✓	✓	✓	✓	✓	
19	4300	35600	7	70.54	✓	✓	✓	✓	✓	✓	✓	
22	4300	33800	7	62.55	✓	✓	✓	✓	✓	✓	✓	✓
24	4300	32300	7	56.55			✓	✓	✓	✓	✓	✓
29	4300	30000	7	47.93*			✓	✓	✓	✓	✓	✓
33	4300	28300	7	41.87					✓	✓	✓	✓
36	4300	27100	7	38.30	✓	✓	✓	✓	✓	✓		
40	4300	25700	7	34.23	✓	✓	✓	✓	✓	✓		
45	4300	24500	7	30.82	✓	✓	✓	✓	✓	✓	✓	
50	4300	23300	8	27.91	✓	✓	✓	✓	✓	✓	✓	
56	4300	22000	8	24.75	✓	✓	✓	✓	✓	✓	✓	✓
62	4300	20900	8	22.37			✓	✓	✓	✓	✓	✓
73	4300	19100	8	18.96			✓	✓	✓	✓	✓	✓
84	4300	17800	8	16.56					✓	✓	✓	✓
101	4300	16100	8	13.85					✓	✓	✓	✓
116	3890	16200	8	11.99					✓	✓	✓	✓
134	2870	16400	10	10.41					✓	✓	✓	✓
160	2660	15800	10	8.71					✓	✓	✓	✓
185	2400	15700	10	7.54					✓	✓	✓	✓

K97R57, n_e = 1400 min^{-1} — **4300 Nm**

n_a min^{-1}	M_{amax} Nm	F_{Ra} N	$\varphi_{(/R)}$	i	DRN 63M 63MS 71M 71MS 80MK 80MS	DRN 80M 90S	DRN 90L	DRN 100L 100LM 100LS	DRN 112M	DRN 132M 132S
						3 3				
0.07	4300	40000	7	18091	✓					
0.08	4300	40000	7	16666	✓					
0.09	4300	40000	7	14897	✓					
0.1	4300	40000	7	13182	✓					
0.11	4300	40000	7	11677	✓	✓	✓			
0.13	4300	40000	7	10317	✓	✓	✓	✓		
0.15	4300	40000	7	9083	✓	✓	✓			
0.17	4300	40000	7	8054	✓	✓	✓			
0.2	4300	40000	7	6970	✓	✓	✓	✓	✓	
0.23	4300	40000	7	6027	✓	✓	✓	✓		
0.25	4300	40000	7	5391	✓	✓	✓			
0.29	4300	40000	7	4669	✓	✓	✓	✓	✓	
0.34	4300	40000	8	4082	✓	✓	✓	✓		
0.39	4300	40000	7	3583	✓	✓	✓	✓		
0.45	4300	40000	7	3108	✓	✓	✓			
0.5	4300	40000	8	2757	✓	✓	✓	✓	✓	
						3 2				
0.57	4300	40000	7	2419	✓	✓	✓			
0.65	4300	40000	7	2123	✓	✓	✓	✓		
0.75	4300	40000	7	1856	✓	✓	✓			
0.86	4300	40000	7	1625	✓	✓	✓	✓	✓	
0.97	4300	40000	7	1430	✓	✓	✓	✓	✓	✓
1.1	4300	40000	7	1261	✓	✓	✓			
1.2	4300	40000	7	1102	✓	✓	✓			
1.4	4300	40000	8	957	✓	✓	✓			
1.6	4300	40000	8	855	✓	✓	✓			
1.8	4300	40000	7	743	✓	✓	✓	✓	✓	✓
2.1	4300	40000	7	652	✓	✓	✓	✓	✓	✓
2.4	4300	40000	8	573	✓	✓	✓	✓	✓	
2.7	4300	40000	7	504	✓	✓	✓	✓	✓	✓
3.2	4300	40000	7	437	✓	✓	✓	✓	✓	✓
3.6	4300	40000	7	382	✓	✓	✓	✓	✓	✓
4	4300	40000	7	342		✓	✓	✓	✓	✓
4.5	4300	40000	8	305	✓	✓	✓	✓	✓	✓
5.4	4300	40000	8	258	✓	✓	✓	✓	✓	✓
6	4300	40000	8	232	✓	✓	✓	✓	✓	✓
7	4300	40000	8	199	✓	✓	✓	✓	✓	✓

K107, n_e = 1400 min^{-1} — **8000 Nm**

n_a min^{-1}	M_{amax} Nm	F_{Ra} N	$\varphi_{(/R)}$	i	DRN 100L 100LM 100LS	DRN 112M	DRN 132M 132S	DRN 132L 160L 160M	DRN 180L 180M	DRN 200L 225M 225S	DRN 250M 280M 280S
						3					
9.7	8000	65000	6	143.47*	✓	✓	✓				
11	8000	61500	6	121.46	✓	✓	✓				
12	8000	59300	6	112.41*	✓	✓	✓	✓			

K107, n_e = 1400 min^{-1} — **8000 Nm**

n_a min^{-1}	M_{amax} Nm	F_{Ra} N	$\varphi_{(/R)}$	i	DRN 100L 100LM 100LS	DRN 112M	DRN 132M 132S	DRN 132L 160L 160M	DRN 180L 180M	DRN 200L 225M 225S	DRN 250M 280M 280S
13	8000	56200	6	100.75	✓	✓	✓	✓			
15	8000	53500	6	90.96*	✓	✓	✓	✓	✓		
16	8000	50900	6	82.61	✓	✓	✓	✓	✓		
19	8000	47900	6	73.30	✓	✓	✓	✓	✓	✓	
21	8000	45400	6	66.52*	✓	✓	✓	✓	✓	✓	
24	8000	41700	6	57.17*	✓	✓	✓	✓	✓	✓	✓
28	7840	39300	6	49.90			✓	✓	✓	✓	✓
33	7360	37900	6	42.33*			✓	✓	✓	✓	✓
37	7200	35800	6	37.00*			✓	✓	✓	✓	✓
42	7200	33200	6	32.69	✓	✓	✓	✓	✓		
44	6800	34200	6	31.28*				✓	✓	✓	✓
48	7200	30700	6	29.00	✓	✓	✓	✓	✓	✓	
53	7200	28800	6	26.32	✓	✓	✓	✓	✓	✓	
61	7200	25800	6	22.62	✓	✓	✓	✓	✓	✓	✓
70	7200	23200	6	19.74			✓	✓	✓	✓	✓
83	7050	21000	7	16.75			✓	✓	✓	✓	✓
95	6890	19500	7	14.64			✓	✓	✓	✓	✓
104	4300	29200	9	13.43	✓	✓	✓	✓	✓	✓	✓
119	4300	27500	9	11.73			✓	✓	✓	✓	✓
140	4190	25800	9	9.94			✓	✓	✓	✓	✓
161	4070	24600	9	8.69			✓	✓	✓	✓	✓
190	3600	24400	9	7.35				✓	✓	✓	✓

K107R77, n_e = 1400 min^{-1} — **8000 Nm**

n_a min^{-1}	M_{amax} Nm	F_{Ra} N	$\varphi_{(/R)}$	i	DRN 63M 63MS 71M 71MS 80MK 80MS	DRN 80M 90S	DRN 90L	DRN 100L 100LM 100LS	DRN 112M	DRN 132M 132S	DRN 132L 160L 160M
						3	3				
0.09	8000	65000	6	14311	✓						
0.11	8000	65000	6	12211	✓	✓					
0.13	8000	65000	6	10677	✓	✓	✓				
0.14	8000	65000	6	9524	✓	✓					
0.16	8000	65000	6	8328	✓	✓	✓				
0.19	8000	65000	6	7270	✓	✓	✓				
0.22	8000	65000	6	6184	✓	✓	✓	✓	✓		
0.24	8000	65000	6	5662	✓	✓	✓	✓	✓	✓	
0.27	8000	65000	6	5138	✓	✓	✓	✓	✓	✓	
0.32	8000	65000	6	4359	✓	✓	✓	✓	✓		
0.36	8000	65000	6	3810	✓	✓	✓	✓	✓		
0.41	8000	65000	6	3358	✓	✓	✓	✓	✓	✓	
0.47	8000	65000	6	2977	✓	✓	✓	✓	✓		
0.53	8000	65000	6	2599	✓	✓	✓	✓	✓		
0.61	8000	65000	6	2286	✓	✓	✓	✓	✓	✓	
0.72	8000	65000	6	1939	✓	✓	✓	✓	✓	✓	
						3	2				
0.81	8000	65000	6	1713	✓	✓	✓	✓	✓		
0.9	8000	65000	6	1554	✓	✓	✓	✓	✓		
1	8000	65000	6	1336	✓	✓	✓	✓	✓		

K107R77, n_e = 1400 min^{-1} — **8000 Nm**

n_a min^{-1}	M_{amax} Nm	F_{Ra} N	$\varphi_{(/R)}$	i	DRN 63M 63MS 71M 71MS 80MK 80MS	DRN 80M 90S	DRN 90L	DRN 100L 100LM 100LS	DRN 112M	DRN 132M 132S	DRN 132L 160L 160M
1.2	8000	65000	6	1166	✓	✓	✓	✓	✓		
1.3	8000	65000	6	1030	✓	✓	✓	✓	✓	✓	✓
1.5	8000	65000	6	904	✓	✓	✓	✓	✓	✓	✓
1.7	8000	65000	6	793	✓	✓	✓	✓	✓		
2	8000	65000	6	696	✓	✓	✓	✓	✓	✓	
2.2	8000	65000	6	615	✓	✓	✓	✓	✓	✓	✓
2.6	8000	65000	6	522	✓	✓	✓	✓	✓	✓	✓
3	8000	65000	6	461		✓	✓	✓	✓	✓	✓
3.4	8000	65000	6	408		✓	✓	✓	✓	✓	✓
3.8	8000	65000	6	364	✓	✓	✓	✓	✓	✓	
4.4	8000	65000	6	318	✓	✓	✓	✓	✓	✓	
4.8	8000	65000	6	286	✓	✓	✓	✓	✓	✓	✓
5.5	8000	65000	6	251	✓	✓	✓	✓	✓	✓	✓
6.3	8000	65000	6	222		✓	✓	✓	✓	✓	✓
7.1	8000	65000	6	196		✓	✓	✓	✓	✓	✓
8	7200	65000	7	174		✓	✓	✓	✓	✓	✓
9	7200	65000	7	154		✓	✓	✓	✓	✓	✓
10	7200	65000	7	140		✓	✓	✓	✓	✓	✓

K127, n_e = 1400 min^{-1} — **13000 Nm**

n_a min^{-1}	M_{amax} Nm	F_{Ra} N	$\varphi_{(/R)}$	i	DRN 132M 132S	DRN 132L 160L 160M	DRN 180L 180M	DRN 200L 225M 225S	DRN 250M 280M 280S
					 3				
9.5	13000	79200	5	146.07	✓				
10	13000	79200	5	136.14	✓	✓			
11	13000	79200	5	122.48	✓	✓			
12	13000	79200	5	110.18	✓	✓	✓		
15	13000	75100	5	89.89	✓	✓	✓	✓	
17	13000	72100	5	81.98	✓	✓	✓	✓	
19	13000	67700	5	70.95*	✓	✓	✓	✓	✓
22	13000	64000	5	62.60	✓	✓	✓	✓	✓
25	13000	59900	5	54.07	✓	✓	✓	✓	✓
29	13000	56500	5	47.82	✓	✓	✓	✓	✓
34	13000	52000	5	40.19		✓	✓	✓	✓
38	13000	49400	6	36.25	✓	✓	✓	✓	
44	13000	45900	6	31.37	✓	✓	✓	✓	✓
50	13000	43000	6	27.68	✓	✓	✓	✓	✓
58	13000	39800	6	23.91	✓	✓	✓	✓	✓
66	13000	37200	6	21.15	✓	✓	✓	✓	✓
78	13000	32600	6	17.77		✓	✓	✓	✓
97	12100	31000	6	14.35			✓	✓	✓
109	8530	35400	8	12.79	✓	✓	✓	✓	✓
130	8000	33900	8	10.74		✓	✓	✓	✓
161	7230	32500	8	8.68			✓	✓	✓

K127R77, n_e = 1400 min^{-1} — **13000 Nm**

n_a min^{-1}	M_{amax} Nm	F_{Ra} N	$\varphi_{(/R)}$	i	DRN 63M 63MS 71M 71MS 80MK 80MS	DRN 80M 90S	DRN 90L	DRN 100L 100LM 100LS	DRN 112M	DRN 132M 132S	DRN 132L 160L 160M
					 3	 3					
0.07	13000	79200	5	17550	✓						
0.08	13000	79200	5	16006	✓						
0.09	13000	79200	5	14975	✓	✓					
0.11	13000	79200	5	12440	✓	✓	✓				
0.12	13000	79200	5	10915	✓	✓	✓	✓			
0.14	13000	79200	5	9819	✓	✓	✓				
0.16	13000	79200	5	8443	✓	✓	✓	✓	✓		
0.18	13000	79200	6	7482	✓	✓	✓				
0.21	13000	79200	6	6565	✓	✓	✓	✓			
0.24	13000	79200	5	5804	✓	✓	✓	✓	✓	✓	
0.27	13000	79200	6	5027	✓	✓	✓	✓	✓		
0.31	13000	79200	6	4423	✓	✓	✓	✓	✓	✓	
0.35	13000	79200	5	3889	✓	✓	✓	✓	✓	✓	
0.42	13000	79200	5	3311	✓	✓	✓	✓	✓	✓	
0.46	13000	79200	5	3009	✓	✓	✓	✓	✓	✓	✓
0.53	13000	79200	5	2607	✓	✓	✓	✓	✓	✓	✓
0.61	13000	79200	5	2268		✓	✓	✓	✓	✓	✓
					 3	 2					
0.72	13000	79200	5	1926	✓	✓	✓	✓	✓		
0.79	13000	79200	5	1757	✓	✓	✓	✓	✓		
0.9	13000	79200	5	1541	✓	✓	✓	✓	✓	✓	
1	13000	79200	5	1342	✓	✓	✓	✓	✓		
1.1	13000	79200	5	1177	✓	✓	✓	✓	✓	✓	
1.3	13000	79200	6	1025	✓	✓	✓	✓	✓		
1.5	13000	79200	6	899	✓	✓	✓	✓	✓	✓	
1.7	13000	79200	5	790		✓	✓	✓	✓	✓	✓
1.9	13000	79200	5	704	✓	✓	✓	✓	✓	✓	
2.2	13000	79200	5	610	✓	✓	✓	✓	✓	✓	✓
2.5	13000	79200	6	549	✓	✓	✓	✓	✓	✓	✓
2.9	13000	79200	5	477		✓	✓	✓	✓	✓	✓
3.3	13000	79200	6	418	✓	✓	✓	✓	✓	✓	✓

K127R87, n_e = 1400 min^{-1} — **13000 Nm**

n_a min^{-1}	M_{amax} Nm	F_{Ra} N	$\varphi_{(/R)}$	i	DRN 80M 90S	DRN 90L	DRN 100L 100LM 100LS	DRN 112M	DRN 132M 132S	DRN 132L 160L 160M	DRN 180L 180M	DRN 200L
					 3	 2						
2.6	13000	79200	6	536	✓	✓	✓	✓	✓	✓	✓	✓
2.9	13000	79200	6	473			✓	✓	✓	✓	✓	✓
3.3	13000	79200	6	418	✓	✓	✓	✓	✓	✓	✓	✓
3.8	13000	79200	6	367	✓	✓	✓	✓	✓	✓	✓	
4.2	13000	79200	6	330	✓	✓	✓	✓	✓	✓	✓	
4.8	13000	79200	6	287			✓	✓	✓	✓	✓	✓
5.5	13000	79200	6	253			✓	✓	✓	✓	✓	✓
6.5	13000	79200	6	213			✓	✓	✓	✓	✓	✓
7	12000	79700	6	200			✓	✓	✓	✓	✓	✓
8.4	12000	79700	6	166			✓	✓	✓	✓	✓	✓

K127R87, n_e = 1400 min^{-1} — **13000 Nm**

n_a min^{-1}	M_{amax} Nm	F_{Ra} N	$\varphi_{(/R)}$	i	DRN 80M 90S	DRN 90L	DRN 100L 100LM 100LS	DRN 112M	DRN 132M 132S	DRN 132L 160L 160M	DRN 180L 180M	DRN 200L
9.5	12000	79700	6	147			✓	✓	✓	✓	✓	✓

K157, n_e = 1400 min^{-1} — **20000 Nm**

n_a min^{-1}	M_{amax} Nm	F_{Ra} N	$\varphi_{(/R)}$	i	DRN 132L 160L 160M	DRN 180L 180M	DRN 200L 225M 225S	DRN 250M 280M 280S	DRN 315M 315S	DRN 315H 315L
						3				
9.3	20000	111100	5	150.41	✓					
11	20000	102100	5	122.39	✓	✓				
13	20000	93700	5	100.22	✓	✓	✓			
15	20000	90000	5	91.65	✓	✓	✓			
17	20000	84500	5	79.75	✓	✓	✓	✓		
19	20000	79800	5	70.38	✓	✓	✓	✓		
22	20000	74600	5	61.02	✓	✓	✓	✓	✓	
25	20000	70600	5	54.29	✓	✓	✓	✓	✓	
29	20000	65600	5	46.79	✓	✓	✓	✓	✓	✓
36	20000	59000	5	38.02		✓	✓	✓	✓	✓
44	19000	55300	6	31.30	✓	✓	✓	✓		
50	20000	49600	6	27.62	✓	✓	✓	✓		
58	20000	45700	6	23.95	✓	✓	✓	✓	✓	
65	20000	42600	6	21.31	✓	✓	✓	✓	✓	
76	20000	38800	6	18.37	✓	✓	✓	✓	✓	✓
93	20000	33800	6	14.92		✓	✓	✓	✓	✓
110	18700	32900	6	12.65			✓	✓	✓	✓

K157R97, n_e = 1400 min^{-1} — **20000 Nm**

n_a min^{-1}	M_{amax} Nm	F_{Ra} N	$\varphi_{(/R)}$	i	DRN 71M 71MS 80MK 80MS	DRN 80M 90S	DRN 90L	DRN 100L 100LM 100LS	DRN 112M	DRN 132M 132S	DRN 132L 160L 160M	DRN 180L 180M	DRN 200L 225S
							3 3						
0.07	20000	111100	5	17679	✓	✓							
0.08	20000	111100	5	15729	✓	✓							
0.09	20000	111100	5	14721	✓	✓	✓						
0.1	20000	111100	5	13097	✓	✓	✓						
0.12	20000	111100	5	11368	✓	✓	✓	✓	✓				
0.13	20000	111100	5	10114	✓	✓	✓	✓	✓				
0.16	20000	111100	5	8718	✓	✓	✓	✓	✓				
0.18	20000	111100	5	7734	✓	✓	✓	✓	✓	✓			
0.2	20000	111100	5	6881	✓	✓	✓	✓	✓	✓			
0.23	20000	111100	5	5931	✓	✓	✓	✓	✓	✓			
0.27	20000	111100	5	5074		✓	✓	✓	✓	✓	✓	✓	
0.31	20000	111100	5	4514		✓	✓	✓	✓	✓	✓	✓	
0.35	20000	111100	5	3979	✓	✓	✓	✓	✓	✓			
0.39	20000	111100	6	3516		✓	✓	✓	✓	✓	✓	✓	
0.45	20000	111100	5	3051	✓	✓	✓	✓	✓	✓			
0.53	20000	111100	5	2610		✓	✓	✓	✓	✓	✓	✓	
0.6	20000	111100	5	2322		✓	✓	✓	✓	✓	✓	✓	
0.68	20000	111100	5	2029				✓	✓	✓	✓	✓	✓

K157R97, n_e = 1400 min^{-1}													20000 Nm
n_a min^{-1}	M_{amax} Nm	F_{Ra} N	$\varphi_{(/R)}$	i	DRN 71M 71MS 80MK 80MS	DRN 80M 90S	DRN 90L	DRN 100L 100LM 100LS	DRN 112M	DRN 132M 132S	DRN 132L 160L 160M	DRN 180L 180M	DRN 200L 225S
0.77	20000	111100	5	1805				✓	✓	✓	✓	✓	✓
						3	2						
0.84	20000	111100	5	1659	✓	✓	✓	✓	✓	✓			
1	20000	111100	5	1365	✓	✓	✓	✓	✓	✓	✓		
1.1	20000	111100	5	1229		✓	✓	✓	✓	✓	✓	✓	
1.2	20000	111100	5	1093		✓	✓	✓	✓	✓	✓	✓	
1.4	20000	111100	5	942		✓	✓	✓	✓	✓	✓	✓	
1.6	20000	111100	5	854		✓	✓	✓	✓	✓	✓	✓	
1.8	20000	111100	5	756				✓	✓	✓	✓	✓	✓
2.1	20000	111100	5	661						✓	✓	✓	✓
2.4	20000	111100	5	567		✓	✓	✓	✓	✓	✓	✓	✓
2.7	20000	111100	5	504		✓	✓	✓	✓	✓	✓	✓	✓
3.2	20000	111100	5	434				✓	✓	✓	✓	✓	✓
3.6	20000	111100	5	379						✓	✓	✓	✓
4.2	20000	111100	6	333				✓	✓	✓	✓	✓	✓
4.8	20000	111100	6	291						✓	✓	✓	✓

K157R107, n_e = 1400 min^{-1}								20000 Nm
n_a min^{-1}	M_{amax} Nm	F_{Ra} N	$\varphi_{(/R)}$	i	DRN 132M 132S	DRN 132L 160L 160M	DRN 180L 180M	DRN 200L 225M 225S
					3	2		
3.6	20000	111100	6	385	✓	✓	✓	✓
4.3	20000	111100	6	325		✓	✓	✓
4.6	20000	111100	6	299	✓	✓	✓	✓
5.5	20000	111100	6	253	✓	✓	✓	✓
6	20000	111100	6	230		✓	✓	✓
6.5	20000	111100	6	213	✓	✓	✓	✓
7.4	20000	111100	6	187		✓	✓	✓
8.9	20000	111100	6	157		✓	✓	✓
11	20000	102100	6	122	✓	✓	✓	✓
13	20000	96400	6	107	✓	✓	✓	✓

K167, n_e = 1400 min^{-1}										35000 Nm
n_a min^{-1}	M_{amax} Nm	F_{Ra} N	$\varphi_{(/R)}$	i	DRN 132L 160L 160M	DRN 180L 180M	DRN 200L 225M 225S	DRN 250M 280M 280S	DRN 315M 315S	DRN 315H 315L
						3				
8.5	33800	150000	4	164.50	✓					
10	35000	150000	5	134.99	✓	✓				
12	35000	150000	5	109.83	✓	✓	✓			
15	35000	141700	5	87.86	✓	✓	✓	✓		
17	35000	134600	5	78.14	✓	✓	✓	✓		
20	35000	126500	5	68.07	✓	✓	✓	✓	✓	
23	35000	120100	5	60.74	✓	✓	✓	✓	✓	
27	35000	111500	5	51.77	✓	✓	✓	✓	✓	✓
32	35000	101900	5	42.89		✓	✓	✓	✓	✓

K167, n_e = 1400 min^{-1} — **35000 Nm**

n_a min^{-1}	M_{amax} Nm	F_{Ra} N	$\varphi_{(/R)}$	i	DRN 132L 160L 160M	DRN 180L 180M	DRN 200L 225M 225S	DRN 250M 280M 280S	DRN 315M 315S	DRN 315H 315L
38	35000	94200	5	36.61			✓	✓	✓	✓
43	35000	88200	5	32.25	✓	✓	✓	✓	✓	
48	35000	83100	5	28.77	✓	✓	✓	✓	✓	
57	35000	76200	5	24.52	✓	✓	✓	✓	✓	✓
68	35000	68500	5	20.32		✓	✓	✓	✓	✓
80	35000	62400	5	17.34			✓	✓	✓	✓

K167R97, n_e = 1400 min^{-1} — **35000 Nm**

n_a min^{-1}	M_{amax} Nm	F_{Ra} N	$\varphi_{(/R)}$	i	DRN 71M 71MS 80MK 80MS	DRN 80M 90S	DRN 90L	DRN 100L 100LM 100LS	DRN 112M	DRN 132M 132S	DRN 132L 160L 160M	DRN 180L 180M	DRN 200L 225S
					3	3							
0.07	35000	150000	5	19723	✓	✓							
0.08	35000	150000	5	17406	✓	✓	✓						
0.09	35000	150000	5	15000	✓	✓							
0.1	35000	150000	5	13238	✓	✓	✓						
0.12	35000	150000	5	11573	✓	✓	✓	✓	✓				
0.13	35000	150000	5	10264	✓	✓	✓	✓	✓	✓			
0.16	35000	150000	5	8628	✓	✓	✓	✓	✓	✓			
0.21	35000	150000	5	6562	✓	✓	✓	✓	✓	✓			
0.26	35000	150000	5	5355	✓	✓	✓	✓	✓	✓	✓		
0.29	35000	150000	5	4788		✓	✓	✓	✓	✓	✓	✓	
0.34	35000	150000	5	4079	✓	✓	✓	✓	✓	✓	✓		
0.41	35000	150000	5	3376	✓	✓	✓	✓	✓	✓			
0.5	35000	150000	5	2755	✓	✓	✓	✓	✓	✓	✓		
0.61	35000	150000	5	2263				✓	✓	✓	✓	✓	✓
					3	2							
0.64	35000	150000	5	2182	✓	✓	✓	✓	✓	✓			
0.82	35000	150000	5	1704	✓	✓	✓	✓	✓	✓	✓		
0.99	35000	150000	5	1408	✓	✓	✓	✓	✓	✓			
1	35000	150000	5	1296	✓	✓	✓	✓	✓	✓	✓		
1.2	35000	150000	5	1101		✓	✓	✓	✓	✓	✓	✓	✓
1.4	35000	150000	5	944		✓	✓	✓	✓	✓	✓	✓	
1.6	35000	150000	5	843				✓	✓	✓	✓	✓	✓
1.8	35000	150000	5	757				✓	✓	✓	✓	✓	✓
2.2	35000	150000	5	632		✓	✓	✓	✓	✓	✓	✓	✓
2.4	35000	150000	5	561						✓	✓	✓	✓
2.9	35000	150000	5	481		✓	✓	✓	✓	✓	✓	✓	✓
3.3	35000	150000	5	423						✓	✓	✓	✓
3.7	35000	150000	5	369				✓	✓	✓	✓	✓	✓

K167R107, n_e = 1400 min^{-1} — **35000 Nm**

n_a min^{-1}	M_{amax} Nm	F_{Ra} N	$\varphi_{(/R)}$	i	DRN 100L 100LM 100LS	DRN 112M	DRN 132M 132S	DRN 132L 160L 160M	DRN 180L 180M	DRN 200L 225M 225S
					3	2				
4.4	35000	150000	5	318	✓	✓	✓	✓	✓	✓
5	35000	150000	5	278			✓	✓	✓	✓

K167R107, n_e = 1400 min^{-1} — **35000 Nm**

n_a min^{-1}	M_{amax} Nm	F_{Ra} N	$\varphi_{(/R)}$	i	DRN 100L 100LM 100LS	DRN 112M	DRN 132M 132S	DRN 132L 160L 160M	DRN 180L 180M	DRN 200L 225M 225S
5.7	35000	150000	5	244			✓	✓	✓	✓
6.5	35000	150000	5	213			✓	✓	✓	✓
6.7	35000	150000	5	206			✓	✓	✓	✓
7.7	35000	150000	5	180				✓	✓	✓
8.7	35000	150000	5	160			✓	✓	✓	✓
10	35000	150000	6	135			✓	✓	✓	✓
11	35000	150000	6	118			✓	✓	✓	✓

K187, n_e = 1400 min^{-1} — **53000 Nm**

n_a min^{-1}	M_{amax} Nm	F_{Ra} N	$\varphi_{(/R)}$	i	DRN 132L 160L 160M	DRN 180L 180M	DRN 200L 225M 225S	DRN 250M 280M 280S	DRN 315M 315S	DRN 315H 315L
						3				
7.7	53000	190000	4	179.86	✓	✓	✓			
8.4	53000	190000	4	165.21	✓	✓	✓			
9.6	53000	181500	4	144.59	✓	✓	✓	✓		
10	53000	173100	4	129.69	✓	✓	✓	✓		
12	53000	162500	4	112.60	✓	✓	✓	✓	✓	
13	53000	155400	4	102.16	✓	✓	✓	✓	✓	
15	53000	145100	4	88.00	✓	✓	✓	✓	✓	✓
18	53000	133500	4	73.96		✓	✓	✓	✓	✓
21	53000	124400	4	64.04			✓	✓	✓	✓
26	53000	113400	4	53.36			✓	✓	✓	✓
30	53000	104300	4	45.50*			✓	✓	✓	✓
32	53000	100500	4	42.51	✓	✓	✓	✓	✓	
36	53000	95300	4	38.57	✓	✓	✓	✓	✓	
42	53000	87500	4	33.23	✓	✓	✓	✓	✓	✓
50	53000	78900	4	27.92		✓	✓	✓	✓	✓
57	53000	72100	4	24.18			✓	✓	✓	✓
69	49700	69000	4	20.15			✓	✓	✓	✓
81	46400	67300	4	17.18			✓	✓	✓	✓

K187R97, n_e = 1400 min^{-1} — **53000 Nm**

n_a min^{-1}	M_{amax} Nm	F_{Ra} N	$\varphi_{(/R)}$	i	DRN 71M 71MS 80MK 80MS	DRN 80M 90S	DRN 90L	DRN 100L 100LM 100LS	DRN 112M	DRN 132M 132S	DRN 132L 160L 160M	DRN 180L 180M	DRN 200L 225S
							3 3						
0.04	53000	190000	4	32625	✓	✓							
0.05	53000	190000	4	27165	✓	✓	✓						
0.05	53000	190000	4	24353	✓	✓	✓	✓					
0.07	53000	190000	4	19144	✓	✓	✓	✓	✓				
0.08	53000	190000	4	16978	✓	✓	✓	✓	✓	✓			
0.09	53000	190000	4	14272	✓	✓	✓	✓	✓	✓			
0.1	53000	190000	4	13116	✓	✓	✓	✓	✓	✓	✓		
0.12	53000	190000	4	11647	✓	✓	✓	✓	✓	✓	✓		
0.13	53000	190000	4	10413		✓	✓	✓	✓	✓	✓	✓	
0.14	53000	190000	4	9363		✓	✓	✓	✓	✓	✓	✓	
0.17	53000	190000	4	8126		✓	✓	✓	✓	✓	✓	✓	✓

K187R97, n_e = 1400 min^{-1} — **53000 Nm**

n_a min^{-1}	M_{amax} Nm	F_{Ra} N	$\varphi_{(/R)}$	i	DRN 71M 71MS 80MK 80MS	DRN 80M 90S	DRN 90L	DRN 100L 100LM 100LS	DRN 112M	DRN 132M 132S	DRN 132L 160L 160M	DRN 180L 180M	DRN 200L 225S
0.19	53000	190000	4	7343	✓	✓	✓	✓	✓	✓			
0.2	53000	190000	4	6747	✓	✓	✓	✓	✓	✓	✓		
0.23	53000	190000	4	5991	✓	✓	✓	✓	✓	✓	✓		
0.26	53000	190000	4	5358		✓	✓	✓	✓	✓	✓	✓	
0.29	53000	190000	4	4817		✓	✓	✓	✓	✓	✓	✓	
0.32	53000	190000	4	4370		✓	✓	✓	✓	✓	✓	✓	
0.49	53000	190000	4	2818				✓	✓	✓	✓	✓	✓
							 3  2						
0.38	53000	190000	4	3609	✓	✓	✓	✓	✓	✓			
0.45	53000	190000	4	3062	✓	✓	✓	✓	✓	✓			
0.55	53000	190000	4	2519	✓	✓	✓	✓	✓	✓	✓		
0.61	53000	190000	4	2268		✓	✓	✓	✓	✓	✓	✓	
0.68	53000	190000	4	2054		✓	✓	✓	✓	✓	✓	✓	
0.76	53000	190000	4	1821		✓	✓	✓	✓	✓	✓	✓	✓
0.87	53000	190000	4	1605		✓	✓	✓	✓	✓	✓	✓	
1	53000	190000	4	1395				✓	✓	✓	✓	✓	✓
1.1	53000	190000	4	1196		✓	✓	✓	✓	✓	✓	✓	✓
1.3	53000	190000	4	1046		✓	✓	✓	✓	✓	✓	✓	✓
1.4	53000	190000	4	945				✓	✓	✓	✓	✓	✓
1.8	53000	190000	4	738				✓	✓	✓	✓	✓	✓
2.2	53000	190000	4	621				✓	✓	✓	✓	✓	✓
2.6	53000	190000	4	527				✓	✓	✓	✓	✓	✓

K187R107, n_e = 1400 min^{-1} — **53000 Nm**

n_a min^{-1}	M_{amax} Nm	F_{Ra} N	$\varphi_{(/R)}$	i	DRN 100L 100LM 100LS	DRN 112M	DRN 132M 132S	DRN 132L 160L 160M	DRN 180L 180M	DRN 200L 225M 225S
					 3  2					
1.6	53000	190000	4	835	✓	✓	✓	✓	✓	✓
1.9	53000	190000	4	729			✓	✓	✓	✓
2.2	53000	190000	4	622			✓	✓	✓	✓
2.6	53000	190000	4	520	✓	✓	✓	✓	✓	✓
3	53000	190000	4	454			✓	✓	✓	✓
3.9	53000	190000	4	355			✓	✓	✓	✓
5.3	53000	190000	5	261			✓	✓	✓	✓
6.3	53000	190000	5	221			✓	✓	✓	✓
7.2	53000	190000	5	193			✓	✓	✓	✓
8.5	53000	190000	5	163				✓	✓	✓

4.4.2 Selection tables K..DRN.. in kW

P_N = 0.12 kW

n_a min^{-1}	M_a Nm	i	F_{Ra} N	SEW f_B	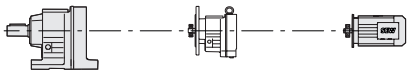			m kg
0.08	10900	17550	80300	1.20				
0.09	9260	14975	81000	1.40				
0.09	9900	16006	80700	1.30	**K127**			470
0.11	7690	12440	81600	1.70	**KF127**	**R77**	**DRN63MS4**	510
0.13	6750	10915	81800	1.95	**KA127**			440
0.14	6070	9819	82000	2.1	**KAF127**			480
0.16	5190	8443	82200	2.5				
0.18	4630	7482	82400	2.8				
0.10	8850	14311	65000	0.90				
0.11	7550	12211	65000	1.05				
0.13	6600	10677	65000	1.20				
0.14	5890	9524	65000	1.35	**K107**			310
0.17	5150	8328	65000	1.55	**KF107**	**R77**	**DRN63MS4**	320
0.19	4500	7270	65000	1.80	**KA107**			280
0.22	3710	6184	65000	2.2	**KAF107**			305
0.24	3220	5662	65000	2.5				
0.27	2920	5138	65000	2.7				
0.32	2680	4359	65000	3.0				
0.20	4430	6970	40000	0.95				
0.23	4000	6027	40000	1.05				
0.26	3660	5391	40000	1.20	**K97**			180
0.30	3020	4669	40000	1.40	**KF97**	**R57**	**DRN63MS4**	200
0.34	2740	4082	40000	1.55	**KA97**			160
0.39	2380	3583	40000	1.80	**KAF97**			185
0.44	2100	3108	40000	2.1				
0.50	1770	2757	40000	2.4				
0.57	1650	2419	40000	2.6				
0.65	1430	2123	40000	3.0				
0.74	1270	1856	40000	3.4	**K97**			180
0.85	1050	1625	40000	4.1	**KF97**	**R57**	**DRN63MS4**	200
0.96	890	1430	40000	4.8	**KA97**			160
1.1	870	1261	40000	5.0	**KAF97**			185
1.3	755	1102	40000	5.7				
0.30	2900	4562	27000	0.95				
0.34	2680	4037	27300	1.00	**K87**			120
0.38	2400	3609	27600	1.15	**KF87**	**R57**	**DRN63MS4**	130
0.44	2070	3107	28000	1.30	**KA87**			105
0.51	1730	2728	28300	1.55	**KAF87**			120
0.58	1530	2371	28400	1.75				
0.66	1430	2088	28500	1.90				
0.74	1270	1854	28600	2.1				
0.83	1140	1657	28700	2.4				
0.97	970	1415	28800	2.8	**K87**			120
1.1	840	1229	28900	3.2	**KF87**	**R57**	**DRN63MS4**	125
1.3	725	1078	28900	3.7	**KA87**			105
1.5	610	951	29000	4.4	**KAF87**			120
1.7	525	837	29000	5.2				
1.9	455	726	29000	5.9				
					K77			70
0.51	1840	2717	11500	0.85	**KF77**	**R37**	**DRN63MS4**	78
0.58	1530	2370	15500	1.00	**KA77**			62
					KAF77			70

P_N = 0.12 kW

n_a min^{-1}	M_a Nm	i	F_{Ra} N	SEW f_B	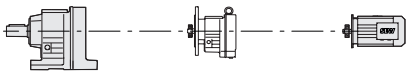			m kg
0.67	1440	2050	16100	1.10				
0.78	1230	1772	17300	1.25				
0.91	1050	1514	18100	1.50				
0.99	960	1388	18500	1.60	**K77**			69
1.1	840	1218	18900	1.85	**KF77**	**R37**	**DRN63MS4**	78
1.3	740	1053	19200	2.1	**KA77**			62
1.5	645	924	19400	2.4	**KAF77**			70
1.7	570	815	19600	2.7				
2.0	450	709	19800	3.5				
2.2	395	622	19900	3.9				
1.0	960	1351	6940	0.90				
1.2	830	1171	10300	1.05				
1.3	725	1034	11100	1.20				
1.5	605	903	11900	1.45				
1.7	570	793	12100	1.50				
2.0	455	697	12600	1.90				
2.3	400	613	12800	2.2	**K67**			45
2.6	350	542	13000	2.5	**KF67**	**R37**	**DRN63MS4**	51
2.9	330	471	13000	2.6	**KA67**			42
3.3	270	420	13000	3.1	**KAF67**			48
3.8	250	361	13000	3.3				
4.3	220	323	13000	3.8				
5.0	181	279	13000	4.8				
5.6	159	246	13000	5.5				
6.4	139	217	13000	5.9				
1.5	605	906	7580	1.05				
1.7	545	806	8060	1.15				
2.0	455	699	8620	1.40				
2.3	400	615	8870	1.55				
2.5	350	544	9080	1.80				
2.9	325	473	9190	1.95	**K57**			39
3.3	275	421	9390	2.3	**KF57**	**R37**	**DRN63MS4**	44
3.8	250	362	9470	2.5	**KA57**			37
4.3	220	319	9570	2.8	**KAF57**			43
4.9	181	280	9690	3.5				
5.6	159	246	9760	4.0				
6.4	141	215	9810	4.3				
7.2	126	192	9850	5.0				
1.5	620	908	9000	0.80				
1.7	545	802	9000	0.90				
2.0	460	701	9000	1.10				
2.1	445	645	9000	1.10				
2.3	385	595	9000	1.30				
2.5	365	543	9000	1.35				
2.8	315	501	9000	1.60	**K49**			43
3.1	285	449	9000	1.75	**KF49**	**R37**	**DRN63MS4**	45
3.4	245	401	9000	2.0	**KA49**			40
3.8	225	360	9000	2.2	**KAF49**			45
4.2	205	330	9000	2.4				
4.6	197	300	9000	2.5				
5.0	172	274	9000	2.9				
5.7	149	243	9000	3.3				
6.4	138	217	9000	3.6				
7.2	130	193	9000	3.9				

P_N = 0.12 kW

n_a min^{-1}	M_a Nm	i	F_{Ra} N	SEW f_B	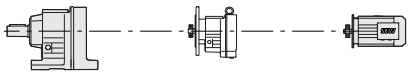			m kg
2.5	380	552	8750	1.20				
2.8	325	495	9180	1.40	**K47**			33
3.2	290	426	9440	1.55	**KF47**	**R37**	**DRN63MS4**	37
3.7	245	375	9690	1.85	**KA47**			33
4.2	225	327	9690	2.0	**KAF47**			35
4.8	198	289	9690	2.3				
2.7	330	504	7500	0.90				
3.0	315	454	7500	0.95				
3.5	270	399	7500	1.10				
3.8	250	365	7500	1.20				
4.4	205	312	7500	1.45				
4.6	200	299	7500	1.50	**K39**			24
5.4	172	254	7500	1.75	**KF39**	**R17**	**DRN63MS4**	26
5.9	154	234	7500	1.95	**KA39**			23
6.6	140	210	7500	2.1	**KAF39**			25
7.3	128	189	7500	2.3				
7.9	120	174	7500	2.5				
8.8	104	156	7500	2.9				
9.7	96	142	7500	3.1				
12	78	117	7500	3.8				
4.0	245	346	3540	0.95				
4.5	205	304	5150	1.05				
5.2	189	267	5310	1.20	**K37**			19
5.9	163	234	5540	1.40	**KF37**	**R17**	**DRN63MS4**	22
6.7	142	205	5730	1.60	**KA37**			19
7.6	124	181	5900	1.85	**KAF37**			21
8.6	109	160	6040	2.1				
10	91	136	6200	2.5				
6.0	191	144.79*	13000	4.6	**K67** **KF67** **KA67** **KAF67**	**-**	**DRN63M6**	35 40 32 38
6.0	191	145.14*	9660	3.3				
7.0	163	123.85	9750	3.9	**K57**			29
8.0	143	108.29	9810	4.4	**KF57**	**-**	**DRN63M6**	34
8.5	136	102.88*	9830	4.7	**KA57**			27
9.6	119	90.26*	9870	5.3	**KAF57**			33
11	101	76.56*	9920	6.3				
9.5	121	145.14*	9870	5.2				
11	103	123.85	9910	6.1	**K57**			28
13	85	102.88*	9960	7.4	**KF57**	**-**	**DRN63MS4**	33
13	90	108.29	9950	7.0	**KA57**			26
15	75	90.26*	9990	8.4	**KAF57**			32
6.6	174	131.87*	9690	2.6	**K47**			23
7.2	160	121.48*	9690	2.8	**KF47**	**-**	**DRN63M6**	26
8.3	137	104.37	9690	3.3	**KA47**			22
					KAF47			25
					K47			22
10	110	131.87*	9690	4.1	**KF47**	**-**	**DRN63MS4**	26
11	101	121.48*	9690	4.5	**KA47**			21
					KAF47			24
8.2	140	106.38	5750	1.65	**K37**			17
8.9	129	97.81	5860	1.80	**KF37**	**-**	**DRN63M6**	19
10	110	83.69	6030	2.1	**KA37**			17
12	96	72.54	6160	2.4	**KAF37**			18

P_N = 0.12 kW

n_a min^{-1}	M_a Nm	i	F_{Ra} N	SEW f_B	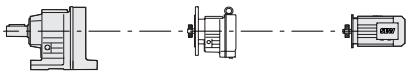			m kg
13	88	106.38	6230	2.6	**K37**	-	**DRN63MS4**	16
14	81	97.81	6290	2.8	**KF37**			18
16	69	83.69	6400	3.3	**KA37**			16
19	60	72.54	6480	3.8	**KAF37**			18
20	56	67.80	6520	4.1				
19	60	71.93	5180	2.2				
21	55	66.25*	5190	2.4	**K29**	-	**DRN63MS4**	10
23	51	61.28*	5200	2.6	**KF29**			11
25	46	54.89	5230	2.9	**KA29**			10.0
27	42	50.35*	5240	3.1	**KAF29**			11
32	36	42.87	5260	3.6				
24	49	58.68	4460	1.45				
26	45	53.88	4480	1.55				
28	41	49.69*	4500	1.70				
31	37	44.48	4500	1.85				
34	34	40.63	4500	2.0				
40	28	34.29	4500	2.3				
43	26	31.74	4500	3.0				
47	24	29.14	4500	3.3				
47	24	29.29	4500	2.5	**K19**	-	**DRN63MS4**	8.6
51	22	26.88*	4500	3.6	**KF19**			9.0
51	23	27.16*	4500	2.7	**KA19**			8.2
57	20	24.06	4460	4.0	**KAF19**			8.6
63	18	21.98	4340	4.4				
74	15	18.55	4120	5.2				
87	13	15.84	3920	6.1				
94	12	14.69	3830	6.6				
109	11	12.70	3660	7.6				
117	9.8	11.84	3580	8.0				
134	8.6	10.32*	3430	8.9				
144	8	9.58	3370	7.9				

P_N = 0.18 kW

n_a min^{-1}	M_a Nm	i	F_{Ra} N	SEW f_B	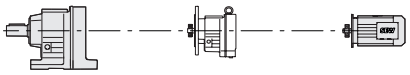			m kg
0.09	15100	14975	75800	0.85				
0.11	12500	12440	79400	1.05				
0.13	11000	10915	80200	1.20				
0.14	9870	9819	80700	1.30				
0.16	8460	8443	81300	1.55	**K127**	**R77**	**DRN63M4**	470
0.18	7520	7482	81600	1.75	**KF127**			510
0.21	6600	6565	81900	1.95	**KA127**			445
0.24	5600	5804	82200	2.3	**KAF127**			480
0.27	4960	5027	82300	2.6				
0.31	4270	4423	82400	3.1				
0.35	3720	3889	82500	3.5				
0.42	3080	3311	82600	4.2				

P_N = 0.18 kW

n_a min^{-1}	M_a Nm	i	F_{Ra} N	SEW f_B	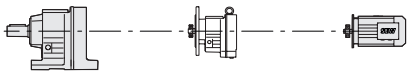			m kg
0.17	8380	8328	65000	0.95	**K107 KF107 KA107 KAF107**	**R77**	**DRN63M4**	310
0.19	7310	7270	65000	1.10				
0.22	6110	6184	65000	1.30				
0.24	5410	5662	65000	1.50				
0.27	4910	5138	65000	1.65				320
0.32	4370	4359	65000	1.85				285
0.36	3820	3810	65000	2.1				305
0.41	3240	3358	65000	2.5				
0.46	2940	2977	65000	2.7				
0.53	2570	2599	65000	3.1				
0.60	2210	2286	65000	3.6				
0.29	4830	4669	40000	0.90	**K97 KF97 KA97 KAF97**	**R57**	**DRN63M4**	180
0.34	4330	4082	40000	1.00				200
0.38	3770	3583	40000	1.15				160
0.44	3300	3108	40000	1.30				185
0.50	2850	2757	40000	1.50				
0.57	2600	2419	40000	1.65	**K97 KF97 KA97 KAF97**	**R57**	**DRN63M4**	180
0.65	2260	2123	40000	1.90				200
0.74	2000	1856	40000	2.2				160
0.85	1680	1625	40000	2.6				185
0.96	1460	1430	40000	3.0				
1.1	1360	1261	40000	3.2				
1.3	1190	1102	40000	3.6				
1.4	1040	957	40000	4.1				
1.6	930	855	40000	4.6				
1.9	735	743	40000	5.8				
2.1	660	652	40000	6.5				
0.44	3280	3107	26500	0.80	**K87 KF87 KA87 KAF87**	**R57**	**DRN63M4**	120
0.50	2790	2728	27200	0.95				130
0.58	2450	2371	27600	1.10				105
								120
0.66	2250	2088	27800	1.20	**K87 KF87 KA87 KAF87**	**R57**	**DRN63M4**	
0.74	2000	1854	28100	1.35				
0.83	1790	1657	28200	1.50				120
0.97	1520	1415	28500	1.75				130
1.1	1320	1229	28600	2.0				105
1.3	1150	1078	28700	2.4				120
1.5	980	951	28800	2.7				
1.6	850	837	28900	3.2				
1.9	740	726	28900	3.7				
0.91	1640	1514	14700	0.95	**K77 KF77 KA77 KAF77**	**R37**	**DRN63M4**	
0.99	1500	1388	15700	1.05				
1.1	1320	1218	16800	1.15				
1.3	1150	1053	17700	1.35				
1.5	1010	924	18300	1.55				70
1.7	890	815	18700	1.75				78
1.9	725	709	19200	2.1				63
2.2	640	622	19400	2.4				71
2.5	575	552	19600	2.7				
2.8	505	485	19700	3.1				
3.2	445	428	19800	3.5				
3.8	395	367	19900	4.0				

P_N = 0.18 kW

n_a min^{-1}	M_a Nm	i	F_{Ra} N	SEW f_B	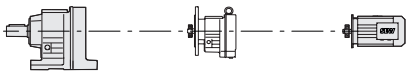			m kg
1.7	890	793	9670	1.00	**K67 KF67 KA67 KAF67**	**R37**	**DRN63M4**	46
2.0	730	697	11100	1.20				52
2.2	640	613	11700	1.35				43
2.5	565	542	12100	1.55				49
2.9	515	471	12300	1.70				
3.3	435	420	12700	1.90				
3.8	390	361	12800	2.1				
4.3	345	323	13000	2.4				
4.9	290	279	13000	3.0				
2.5	565	544	7910	1.10	**K57 KF57 KA57 KAF57**	**R37**	**DRN63M4**	40
2.9	510	473	8330	1.25				45
3.3	435	421	8720	1.45				38
3.8	390	362	8920	1.60				44
4.3	345	319	9110	1.80				
4.9	290	280	9320	2.2				
5.6	255	246	9440	2.5				
6.4	225	215	9550	2.7				
7.2	200	192	9630	3.1				
8.3	174	166	9710	3.6				
2.5	570	543	9000	0.90	**K49 KF49 KA49 KAF49**	**R37**	**DRN63M4**	44
2.7	505	501	9000	1.00				46
3.1	455	449	9000	1.10				41
3.4	400	401	9000	1.25				46
3.8	365	360	9000	1.40				
4.2	335	330	9000	1.50				
4.6	310	300	9000	1.60				
5.0	275	274	9000	1.80				
5.6	240	243	9000	2.1				
6.3	220	217	9000	2.3				
7.1	205	193	9000	2.5				
7.8	181	176	9000	2.8				
9.1	151	152	9000	3.3				
11	127	125	9000	3.9				
2.8	520	495	7750	0.85	**K47 KF47 KA47 KAF47**	**R37**	**DRN63M4**	34
3.7	390	375	8690	1.15				37
4.2	355	327	8960	1.25				33
4.8	310	289	9260	1.45				36
5.4	265	256	9600	1.70				
6.1	240	225	9690	1.85				
6.9	205	198	9690	2.2				
8.0	179	171	9690	2.5				
9.0	160	153	9690	2.8				
10	140	131	9690	3.2				
4.4	325	312	7500	0.95	**K39 KF39 KA39 KAF39**	**R17**	**DRN63M4**	25
4.6	315	299	7500	0.95				27
5.4	270	254	7500	1.10				24
5.9	245	234	7500	1.25				26
6.6	220	210	7500	1.35				
7.3	200	189	7500	1.50				
7.9	186	174	7500	1.60				
8.8	164	156	7500	1.85				
9.7	150	142	7500	2.0				
12	123	117	7500	2.4				
18	77	75	7500	3.8				

P_N = 0.18 kW

n_a min^{-1}	M_a Nm	i	F_{Ra} N	SEW f_B	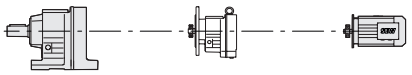			m kg
5.9	255	234	1350	0.90				
6.7	225	205	5000	1.05	**K37**			20
7.6	195	181	5250	1.20	**KF37**	**R17**	**DRN63M4**	23
8.6	172	160	5470	1.35	**KA37**			20
10	144	136	5720	1.60	**KAF37**			22
11	138	127	5770	1.65				
6.3	270	144.79*	13000	3.2	**K67**			35
7.4	230	123.54	13000	3.8	**KF67**	-	**DRN71MS6**	41
8.5	205	108.03	13000	4.3	**KA67**			33
8.9	193	102.62	13000	4.5	**KAF67**			38
9.5	181	144.79*	13000	4.8	**K67**			35
11	154	123.54	13000	5.6	**KF67**	-	**DRN63M4**	40
13	135	108.03	13000	6.4	**KA67**			32
					KAF67			38
6.3	275	145.14*	9390	2.3	**K57**			30
7.4	235	123.85	9520	2.7	**KF57**	-	**DRN71MS6**	34
8.5	205	108.29	9620	3.1	**KA57**			28
8.9	193	102.88*	9650	3.3	**KAF57**			33
10	170	90.26*	9730	3.7				
9.5	181	145.14*	9690	3.5				
11	155	123.85	9770	4.1	**K57**			29
13	129	102.88*	9840	4.9	**KF57**	-	**DRN63M4**	34
13	135	108.29	9830	4.7	**KA57**			27
15	113	90.26*	9890	5.6	**KAF57**			33
18	96	76.56*	9930	6.6				
6.9	250	131.87*	9690	1.80	**K47**			24
7.5	230	121.48*	9690	1.95	**KF47**	-	**DRN71MS6**	27
8.8	196	104.37	9690	2.3	**KA47**			23
10	171	90.86	9690	2.6	**KAF47**			26
11	160	85.12*	9690	2.8				
10	165	131.87*	9690	2.7	**K47**			23
11	152	121.48*	9690	3.0	**KF47**	-	**DRN63M4**	26
13	130	104.37	9690	3.5	**KA47**			22
15	114	90.86	9690	4.0	**KAF47**			25
16	106	85.12*	9690	4.2				
8.6	200	106.38	5210	1.15	**K37**			18
9.4	184	97.81	5360	1.25	**KF37**	-	**DRN71MS6**	20
11	157	83.69	5600	1.45	**KA37**			17
13	136	72.54	5790	1.70	**KAF37**			19
13	133	106.38	5820	1.75				
14	122	97.81	5920	1.90				
16	105	83.69	6080	2.2	**K37**			17
19	91	72.54	6200	2.5	**KF37**	-	**DRN63M4**	19
20	85	67.80	6260	2.7	**KA37**			17
23	73	58.60	6210	3.1	**KAF37**			18
28	62	49.79	5950	3.7				
31	56	44.46	5770	4.1				
36	47	37.97	5520	4.8				

P_N = 0.18 kW

n_a min^{-1}	M_a Nm	i	F_{Ra} N	SEW f_B	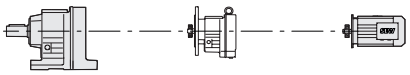			m kg
19	90	71.93	5080	1.45				
21	83	66.25*	5100	1.55				
22	77	61.28*	5120	1.70				
25	69	54.89	5160	1.90				
27	63	50.35*	5180	2.1				
32	54	42.87	5210	2.4	**K29**			11
35	49	38.90	5220	2.7	**KF29**	-	**DRN63M4**	12
37	46	36.96	5230	2.6	**KA29**			11
38	45	35.83	5230	2.9	**KAF29**			12
41	41	33.15	5240	3.1				
46	37	29.69	5070	3.5				
46	38	30.11	5050	3.1				
50	34	27.23	4950	3.8				
55	31	24.91*	4790	3.5				
23	73	58.68	4300	0.95				
26	67	53.88	4350	1.05				
28	62	49.69*	4380	1.15				
31	56	44.48	4420	1.25				
34	51	40.63	4450	1.30				
40	43	34.29	4490	1.50				
43	40	31.74	4500	2.0				
47	36	29.14	4500	2.2				
47	37	29.29	4500	1.65				
51	34	26.88*	4500	2.4	**K19**			9.5
51	34	27.16*	4440	1.75	**KF19**	-	**DRN63M4**	9.8
57	30	24.06	4360	2.7	**KA19**			9.0
63	27	21.98	4250	2.9	**KAF19**			9.4
74	23	18.55	4040	3.5				
87	20	15.84	3860	4.0				
94	18	14.69	3770	4.4				
108	16	12.70	3610	5.0				
116	15	11.84	3530	5.3				
133	13	10.32*	3390	5.9				
143	12	9.58	3340	5.3				
170	10	8.09	3160	7.9				
199	8.6	6.91	3010	9.3				

P_N = 0.25 kW

n_a min^{-1}	M_a Nm	i	F_{Ra} N	SEW f_B	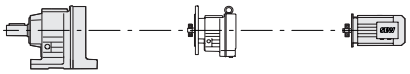			m kg
0.08	22000	17679	109900	0.90	**K157** **KF157** **KA157** **KAF157**	**R97**	**DRN71MS4**	790 870 750 810
0.14	13900	9819	78100	0.95				
0.17	12000	8443	79700	1.10				
0.19	10600	7482	80400	1.20				
0.21	9320	6565	81000	1.40	**K127**			470
0.24	8000	5804	81400	1.65	**KF127**			510
0.28	7040	5027	81800	1.85	**KA127**	**R77**	**DRN71MS4**	445
0.32	6100	4423	82000	2.1	**KAF127**			480
0.36	5320	3889	82200	2.4				
0.42	4450	3311	82400	2.9				

P_N = 0.25 kW

n_a min^{-1}	M_a Nm	i	F_{Ra} N	SEW f_B	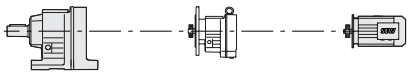			m kg
0.23	8660	6184	65000	0.90				
0.25	7750	5662	65000	1.05				
0.27	7030	5138	65000	1.15				
0.32	6170	4359	65000	1.30	**K107**			310
0.37	5390	3810	65000	1.50	**KF107**	**R77**	**DRN71MS4**	325
0.42	4630	3358	65000	1.75	**KA107**			285
0.47	4170	2977	65000	1.90	**KAF107**			310
0.54	3640	2599	65000	2.2				
0.61	3150	2286	65000	2.5				
0.72	2670	1939	65000	3.0				
0.82	2450	1713	65000	3.3	**K107**			310
0.90	2230	1554	65000	3.6	**KF107**	**R77**	**DRN71MS4**	320
1.1	1910	1336	65000	4.2	**KA107**			280
					KAF107			305
					K97			180
0.45	4590	3108	40000	0.95	**KF97**	**R57**	**DRN71MS4**	200
0.51	4000	2757	40000	1.05	**KA97**			160
					KAF97			185
0.58	3620	2419	40000	1.20				
0.66	3150	2123	40000	1.35				
0.76	2780	1856	40000	1.55				
0.86	2360	1625	40000	1.80	**K97**			180
0.98	2050	1430	40000	2.1	**KF97**	**R57**	**DRN71MS4**	200
1.1	1890	1261	40000	2.3	**KA97**			160
1.3	1650	1102	40000	2.6	**KAF97**			185
1.5	1440	957	40000	3.0				
1.6	1290	855	40000	3.3				
0.67	3130	2088	26700	0.85				
0.76	2780	1854	27200	0.95				
0.85	2480	1657	27500	1.10				
0.99	2120	1415	27900	1.30	**K87**			120
1.1	1840	1229	28200	1.45	**KF87**	**R57**	**DRN71MS4**	130
1.3	1600	1078	28400	1.70	**KA87**			105
1.5	1380	951	28600	1.95	**KAF87**			120
1.7	1200	837	28700	2.3				
1.9	1040	726	28800	2.6				
2.2	930	638	28800	2.9				
1.3	1590	1053	15100	0.95				
1.5	1400	924	16400	1.10				
1.7	1230	815	17300	1.25				
2.0	1020	709	18200	1.50				
2.3	900	622	18700	1.75				
2.5	810	552	19000	1.90				
2.9	705	485	19200	2.2	**K77**			71
3.3	625	428	19400	2.5	**KF77**	**R37**	**DRN71MS4**	79
3.8	545	367	19600	2.8	**KA77**			63
4.3	485	328	19700	3.2	**KAF77**			71
4.9	430	290	19800	3.6				
5.6	370	252	19900	4.2				
6.4	325	221	20000	4.8				
7.2	285	195	20000	5.4				
8.1	250	175	20000	6.2				

P_N = 0.25 kW

n_a min^{-1}	M_a Nm	i	F_{Ra} N	SEW f_B	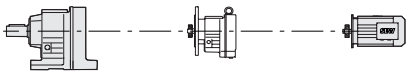			m kg
2.3	900	613	9540	0.95				
2.6	790	542	10600	1.10				
3.0	715	471	11200	1.20				
3.4	610	420	11800	1.35	**K67**			47
3.9	545	361	12200	1.50	**KF67**	**R37**	**DRN71MS4**	52
4.4	480	323	12500	1.70	**KA67**			44
5.0	405	279	12800	2.1	**KAF67**			50
5.7	360	246	13000	2.4				
6.5	315	217	13000	2.6				
3.3	615	421	7520	1.05				
3.9	545	362	8070	1.15				
4.4	480	319	8520	1.30				
5.0	410	280	8850	1.55				
5.7	360	246	9050	1.75	**K57**			41
6.5	315	215	9220	1.90	**KF57**	**R37**	**DRN71MS4**	45
7.3	280	192	9350	2.2	**KA57**			39
8.5	245	166	9490	2.6	**KAF57**			44
9.7	215	145	9590	3.0				
11	194	129	9650	3.1				
13	163	111	9750	3.9				
14	143	97	9800	4.3				
3.5	560	401	9000	0.90				
3.9	510	360	9000	1.00				
4.3	465	330	9000	1.05				
4.7	435	300	9000	1.15				
5.1	390	274	9000	1.30	**K49**			44
5.8	340	243	9000	1.45	**KF49**	**R37**	**DRN71MS4**	46
6.5	310	217	9000	1.60	**KA49**			42
7.3	280	193	9000	1.80	**KAF49**			46
8.0	255	176	9000	2.0				
9.3	210	152	9000	2.4				
11	178	125	9000	2.8				
14	138	99	9000	3.6				
6.0	340	234	7500	0.90				
6.7	305	210	7500	1.00				
7.4	275	189	7500	1.10	**K39**			26
8.1	255	174	7500	1.15	**KF39**	**R17**	**DRN71MS4**	27
9.0	225	156	7500	1.30	**KA39**			25
9.9	210	142	7500	1.45	**KAF39**			26
12	170	117	7500	1.75				
19	108	75	7500	2.7				
4.8	500	192.18	19700	2.9	**K77**			63
5.1	470	179.37	19800	3.1	**KF77**	-	**DRN71M6**	71
5.9	400	154.02	19900	3.9	**KA77**			55
6.8	355	135.28	19900	4.4	**KAF77**			63
6.3	380	144.79*	12900	2.3	**K67**			37
7.4	320	123.54	13000	2.7	**KF67**	-	**DRN71M6**	42
8.5	280	108.03	13000	3.1	**KA67**			34
8.9	270	102.62	13000	3.3	**KAF67**			40
9.7	245	144.79*	13000	3.5	**K67**			35
11	210	123.54	13000	4.1	**KF67**	-	**DRN71MS4**	41
13	184	108.03	13000	4.7	**KA67**			33
14	174	102.62	13000	5.0	**KAF67**			38

P_N = 0.25 kW

n_a min^{-1}	M_a Nm	i	F_{Ra} N	SEW f_B	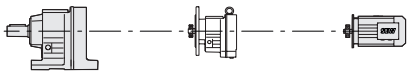			m kg
6.3	380	145.14*	8970	1.65				
7.4	325	123.85	9200	1.95	**K57**			31
8.5	285	108.29	9350	2.2	**KF57**	-	**DRN71M6**	36
8.9	270	102.88*	9400	2.4	**KA57**			29
10	235	90.26*	9520	2.7	**KAF57**			34
12	200	76.56*	9630	3.2				
9.7	245	145.14*	9480	2.6				
11	210	123.85	9600	3.0	**K57**			30
13	184	108.29	9680	3.4	**KF57**	-	**DRN71MS4**	34
14	175	102.88*	9710	3.6	**KA57**			28
16	153	90.26*	9770	4.1	**KAF57**			33
18	130	76.56*	9840	4.8				
					K49			36
19	128	75.20*	9000	3.7	**KF49**	-	**DRN71MS4**	38
20	119	70.19	9000	3.7	**KA49**			33
					KAF49			38
6.9	345	131.87*	9030	1.30				
7.5	315	121.48*	9230	1.40	**K47**			25
8.8	270	104.37	9560	1.65	**KF47**	-	**DRN71M6**	28
10	235	90.86	9690	1.90	**KA47**			24
11	220	85.12*	9690	2.0	**KAF47**			27
11	225	131.87*	9690	2.0				
12	205	121.48*	9690	2.2	**K47**			24
13	177	104.37	9690	2.5	**KF47**	-	**DRN71MS4**	27
15	154	90.86	9690	2.9	**KA47**			23
17	145	85.12*	9690	3.1	**KAF47**			26
					K39			23
24	99	58.24*	7500	3.0	**KF39**	-	**DRN71MS4**	24
28	84	49.69	7500	3.6	**KA39**			22
					KAF39			23
11	220	83.69	5040	1.05				
13	189	72.54	5310	1.20	**K37**			19
14	177	67.80	5420	1.30	**KF37**	-	**DRN71M6**	21
16	153	58.60	5640	1.50	**KA37**			19
18	130	49.79	5850	1.75	**KAF37**			20
13	181	106.38	5380	1.25				
14	166	97.81	5520	1.40				
17	142	83.69	5740	1.60				
19	123	72.54	5910	1.85				
21	115	67.80	5980	2.0	**K37**			18
24	100	58.60	5920	2.3	**KF37**	-	**DRN71MS4**	20
28	85	49.79	5700	2.7	**KA37**			17
32	76	44.46	5540	3.0	**KAF37**			19
37	65	37.97	5320	3.6				
40	60	35.57	5230	3.8				
47	51	29.96	5000	4.3				
49	49	28.83	4950	4.7				

P_N = 0.25 kW

n_a min^{-1}	M_a Nm	i	F_{Ra} N	SEW f_B	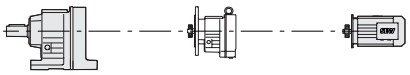			m kg
20	122	71.93	5000	1.05				
21	113	66.25*	5030	1.15				
23	104	61.28*	5060	1.25				
26	93	54.89	5090	1.40				
28	86	50.35*	5110	1.50				
33	73	42.87	5150	1.75				
36	66	38.90	5180	1.95				
38	63	36.96	5150	1.95	**K29**			12
39	61	35.83	5170	2.1	**KF29**	-	**DRN71MS4**	13
42	56	33.15	5060	2.3	**KA29**			11
47	50	29.69	4920	2.6	**KAF29**			12
47	51	30.11	4880	2.3				
52	46	27.23	4800	2.8				
56	42	24.91*	4640	2.6				
61	39	23.19	4590	3.3				
64	38	22.08	4490	2.8				
70	34	19.99	4400	3.8				
32	76	44.48	4290	0.90				
35	69	40.63	4330	0.95				
41	58	34.29	4410	1.10				
44	54	31.74	4430	1.50				
48	50	29.14	4430	1.60				
48	50	29.29	4330	1.25				
52	46	26.88*	4340	1.75				
52	46	27.16*	4250	1.30				
58	41	24.06	4210	1.95				
64	37	21.98	4110	2.1	**K19**			10
76	32	18.55	3920	2.5	**KF19**	-	**DRN71MS4**	10
89	27	15.84	3750	3.0	**KA19**			9.6
96	25	14.69	3670	3.2	**KAF19**			10.0
111	22	12.70	3520	3.7				
119	20	11.84	3450	3.9				
136	18	10.32*	3310	4.3				
147	16	9.58	3280	3.9				
174	14	8.09	3110	5.8				
203	12	6.91	2960	6.8				
219	11	6.41*	2890	7.4				
254	9.4	5.54	2760	8.5				
272	8.8	5.16	2700	9.1				

P_N = 0.37 kW

n_a min^{-1}	M_a Nm	i	F_{Ra} N	SEW f_B	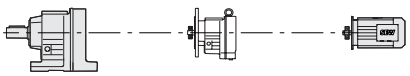			m kg
0.04	64600	32625	190000	0.80	**K187**	**R97**	**DRN71M4**	1770
0.05	53800	27165	190000	1.00	**KH187**			1700
0.07	39100	19723	150000	0.90	**K167**	**R97**	**DRN71M4**	1180
0.08	34500	17406	150000	1.00	**KH167**			1150
					K157			790
0.12	22500	11368	109600	0.90	**KF157**	**R97**	**DRN71M4**	870
0.14	20000	10114	111100	1.00	**KA157**			750
					KAF157			810

P_N = 0.37 kW

n_a min^{-1}	M_a Nm	i	F_{Ra} N	SEW f_B	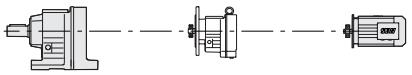			m kg
0.19	16100	7482	73600	0.80				
0.22	14200	6565	77700	0.90	**K127**			475
0.24	12300	5804	79600	1.05	**KF127**	**R77**	**DRN71M4**	510
0.28	10700	5027	80300	1.20	**KA127**			445
0.32	9350	4423	80900	1.40	**KAF127**			480
0.36	8180	3889	81400	1.60				
0.43	6890	3311	81800	1.90				
0.73	4170	1926	82500	3.1	**K127**			470
0.81	3800	1757	82500	3.4	**KF127**	**R77**	**DRN71M4**	510
0.92	3300	1541	82600	3.9	**KA127**			445
					KAF127			480
0.37	8200	3810	65000	1.00				
0.42	7100	3358	65000	1.15	**K107**			310
0.48	6360	2977	65000	1.25	**KF107**	**R77**	**DRN71M4**	325
0.54	5550	2599	65000	1.45	**KA107**			285
0.62	4830	2286	65000	1.65	**KAF107**			310
0.73	4100	1939	65000	1.95				
0.83	3730	1713	65000	2.1	**K107**			310
0.91	3390	1554	65000	2.4	**KF107**	**R77**	**DRN71M4**	325
1.1	2910	1336	65000	2.8	**KA107**			285
1.2	2540	1166	65000	3.2	**KAF107**			310
0.67	4730	2123	40000	0.90				
0.76	4160	1856	40000	1.05				
0.87	3570	1625	40000	1.20				
0.99	3120	1430	40000	1.40				
1.1	2830	1261	40000	1.50	**K97**			180
1.3	2470	1102	40000	1.75	**KF97**	**R57**	**DRN71M4**	200
1.5	2160	957	40000	2.0	**KA97**			165
1.7	1930	855	40000	2.2	**KAF97**			190
1.9	1600	743	40000	2.7				
2.2	1420	652	40000	3.0				
2.5	1280	573	40000	3.4				
1.0	3170	1415	26600	0.85				
1.2	2750	1229	27200	1.00				
1.3	2400	1078	27600	1.10				
1.5	2090	951	28000	1.30				
1.7	1830	837	28200	1.50	**K87**			120
2.0	1580	726	28400	1.70	**KF87**	**R57**	**DRN71M4**	130
2.2	1400	638	28500	1.90	**KA87**			110
2.5	1230	562	28700	2.2	**KAF87**			120
3.0	1030	474	28800	2.6				
3.3	930	426	28800	2.9				
3.8	810	373	28900	3.3				

P_N = 0.37 kW

n_a min^{-1}	M_a Nm	i	F_{Ra} N	SEW f_B	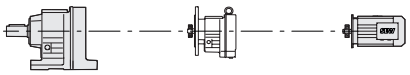			m kg
1.7	1840	815	11900	0.85				
2.0	1550	709	15400	1.00				
2.3	1360	622	16600	1.15				
2.6	1220	552	17400	1.25				
2.9	1070	485	18000	1.45				
3.3	940	428	18500	1.65	**K77**			72
3.9	820	367	18900	1.90	**KF77**	**R37**	**DRN71M4**	80
4.3	730	328	19200	2.1	**KA77**			64
4.9	650	290	19400	2.4	**KAF77**			72
5.6	555	252	19600	2.8				
6.4	490	221	19700	3.2				
7.3	430	195	19800	3.6				
8.1	380	175	19900	4.1				
9.2	335	154	19900	4.6				
3.4	920	420	9250	0.90				
3.9	820	361	10300	1.00				
4.4	725	323	11100	1.15				
5.1	615	279	11800	1.40	**K67**			48
5.8	540	246	12200	1.60	**KF67**	**R37**	**DRN71M4**	53
6.5	480	217	12500	1.70	**KA67**			45
7.4	425	191	12700	1.95	**KAF67**			51
8.5	365	166	12900	2.3				
9.8	320	144	13000	2.7				
12	270	122	13000	3.2				
5.1	615	280	7490	1.00				
5.8	540	246	8090	1.15				
6.6	480	215	8520	1.25				
7.4	425	192	8770	1.50	**K57**			42
8.5	370	166	9020	1.70	**KF57**	**R37**	**DRN71M4**	47
9.8	320	145	9200	1.95	**KA57**			40
11	290	129	9320	2.1	**KAF57**			46
13	245	111	9480	2.6				
15	215	97	9580	2.8				
5.2	585	274	9000	0.85				
5.8	515	243	9000	0.95				
6.5	465	217	9000	1.05	**K49**			46
7.3	420	193	9000	1.20	**KF49**	**R37**	**DRN71M4**	47
8.0	380	176	9000	1.30	**KA49**			43
9.3	320	152	9000	1.55	**KAF49**			48
11	270	125	9000	1.85				
14	210	99	9000	2.4				
5.5	565	256	7400	0.80	**K47**	**R37**	**DRN71M4**	36
					KF47			39
					KA47			35
					KAF47			38
9.1	340	156	7500	0.90	**K39**			27
10	310	142	7500	0.95	**KF39**	**R17**	**DRN71M4**	29
12	255	117	7500	1.20	**KA39**			26
19	162	75	7500	1.80	**KAF39**			28
					K87			100
4.7	745	197.37	28900	3.6	**KF87**	-	**DRN80MK6**	110
5.4	660	174.19	28900	4.1	**KA87**			89
					KAF87			100

P_N = 0.37 kW

n_a min^{-1}	M_a Nm	i	F_{Ra} N	SEW f_B	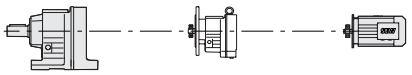			m kg
6.1	580	154.02	19500	2.7	**K77**	-	**DRN80MK6**	65
6.9	510	135.28	19700	3.0	**KF77**			73
7.3	485	128.52	19700	3.2	**KA77**			58
8.2	430	113.56	19800	3.6	**KAF77**			65
7.4	480	192.18	19700	3.0	**K77**	-	**DRN71M4**	63
7.9	450	179.37	19800	3.2	**KF77**			71
9.2	385	154.02	19900	4.0	**KA77**			55
					KAF77			63
7.6	465	123.54	12600	1.85	**K67**	-	**DRN80MK6**	39
8.7	410	108.03	12800	2.1	**KF67**			45
9.1	390	102.62	12900	2.2	**KA67**			36
10	340	90.04	13000	2.6	**KAF67**			42
9.8	360	144.79*	12900	2.4	**K67**	-	**DRN71M4**	37
11	310	123.54	13000	2.8	**KF67**			42
13	270	108.03	13000	3.2	**KA67**			34
16	225	90.04	13000	3.9	**KAF67**			40
19	191	76.37	13000	4.6				
7.6	470	123.85	8570	1.35		-	**DRN80MK6**	
8.6	410	108.29	8840	1.55	**K57**			33
9.1	390	102.88*	8930	1.60	**KF57**			38
10	340	90.26*	9130	1.85	**KA57**			31
12	290	76.56*	9330	2.2	**KAF57**			37
14	260	69.12	9430	2.4				
9.8	360	145.14*	9040	1.75		-	**DRN71M4**	
11	310	123.85	9250	2.0	**K57**			31
13	270	108.29	9390	2.3	**KF57**			36
14	255	102.88*	9440	2.5	**KA57**			29
16	225	90.26*	9550	2.8	**KAF57**			34
18	191	76.56*	9660	3.3				
20	173	69.12	9720	3.7				
19	188	75.20*	9000	2.5	**K49**	-	**DRN71M4**	37
20	175	70.19	9000	2.5	**KF49**			39
23	151	60.27	9000	3.3	**KA49**			35
					KAF49			39
9.0	395	104.37	8660	1.15	**K47**	-	**DRN80MK6**	27
10	345	90.86	9040	1.30	**KF47**			31
11	320	85.12*	9200	1.40	**KA47**			27
12	285	75.20*	9470	1.60	**KAF47**			29
11	330	131.87*	9140	1.35		-	**DRN71M4**	
12	305	121.48*	9330	1.50				
14	260	104.37	9650	1.75	**K47**			25
16	225	90.86	9690	2.0	**KF47**			28
17	215	85.12*	9690	2.1	**KA47**			24
19	188	75.20*	9690	2.4	**KAF47**			27
20	174	69.84	9690	2.6				
22	158	63.30*	9510	2.9				
24	145	58.24*	7500	2.1	**K39**	-	**DRN71M4**	24
28	124	49.69	7500	2.4	**KF39**			25
33	109	43.45	7500	2.8	**KA39**			23
34	103	41.28*	7500	2.9	**KAF39**			24
39	90	36.22	7500	3.3				

P_N = 0.37 kW

n_a min^{-1}	M_a Nm	i	F_{Ra} N	SEW f_B	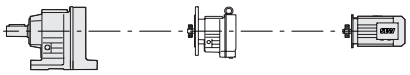			m kg
14	245	97.81	3550	0.95				
17	210	83.69	5130	1.10				
20	181	72.54	5380	1.25				
21	169	67.80	5490	1.35				
24	146	58.60	5480	1.55				
28	124	49.79	5320	1.85				
32	111	44.46	5200	2.1	**K37**			19
37	95	37.97	5030	2.4	**KF37**	-	**DRN71M4**	21
40	89	35.57	4960	2.6	**KA37**			19
47	75	29.96	4770	2.9	**KAF37**			20
49	72	28.83	4720	3.2				
57	62	24.99	4560	3.7				
61	58	23.36	4480	3.9				
70	50	20.19	4320	3.7				
82	43	17.15	4130	4.2				
26	137	54.89	4950	0.95				
28	126	50.35*	4990	1.05				
33	107	42.87	4980	1.20				
38	92	36.96	4840	1.30				
47	75	30.11	4630	1.55	**K29**			13
48	74	29.69	4690	1.75	**KF29**	-	**DRN71M4**	14
52	68	27.23	4590	1.90	**KA29**			13
57	62	24.91*	4430	1.75	**KAF29**			13
61	58	23.19	4410	2.3				
64	55	22.08	4300	1.90				
71	50	19.99	4250	2.6				
87	41	16.29	4020	3.2				
48	73	29.29	4030	0.85				
52	68	27.16*	3980	0.90				
59	60	24.06	4000	1.35				
64	55	21.98	3920	1.45				
76	46	18.55	3760	1.75				
89	40	15.84	3610	2.0				
96	37	14.69	3540	2.2				
111	32	12.70	3410	2.5	**K19**			11
120	30	11.84	3350	2.7	**KF19**	-	**DRN71M4**	12
137	26	10.32*	3220	3.0	**KA19**			11
148	24	9.58	3210	2.6	**KAF19**			11
175	20	8.09	3050	4.0				
205	17	6.91	2910	4.6				
221	16	6.41*	2850	5.0				
255	14	5.54	2720	5.8				
274	13	5.16	2660	6.2				
314	11	4.50*	2550	7.1				

P_N = 0.55 kW

n_a min^{-1}	M_a Nm	i	F_{Ra} N	SEW f_B	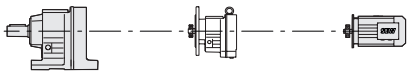			m kg
0.07	58500	19144	190000	0.90				
0.08	51800	16978	190000	1.00				
0.10	43400	14272	190000	1.20				
0.11	39400	13116	190000	1.35	**K187**	**R97**	**DRN80MK4**	1770
0.12	34400	11647	190000	1.55	**KH187**			1700
0.20	22300	7343	190000	2.4				
0.21	20300	6747	190000	2.6				
0.24	17700	5991	190000	3.0				
0.40	11200	3609	190000	4.8				
0.47	9420	3062	190000	5.6	**K187**	**R97**	**DRN80MK4**	1760
0.57	7520	2519	190000	7.1	**KH187**			1700
0.11	40400	13238	150000	0.85				
0.12	35300	11573	150000	1.00				
0.14	31300	10264	150000	1.10				
0.17	26200	8628	150000	1.35				
0.22	20000	6562	150000	1.75	**K167**	**R97**	**DRN80MK4**	1190
0.27	15800	5355	150000	2.2	**KH167**			1150
0.35	12300	4079	150000	2.9				
0.43	10300	3376	150000	3.4				
0.52	8130	2755	150000	4.3				
0.66	6740	2182	150000	5.2				
0.84	5180	1704	150000	6.8	**K167**	**R97**	**DRN80MK4**	1180
1.0	4330	1408	150000	8.1	**KH167**			1140
1.1	3940	1296	150000	8.9				
0.19	23500	7734	108900	0.85				
0.21	20900	6881	110600	0.95	**K157**			790
0.24	18000	5931	112200	1.10	**KF157**	**R97**	**DRN80MK4**	870
0.36	12100	3979	114600	1.65	**KA157**			750
0.47	9280	3051	115500	2.2	**KAF157**			810
					K157			790
0.87	5110	1659	116300	3.9	**KF157**	**R97**	**DRN80MK4**	870
1.1	4080	1365	116400	4.9	**KA157**			750
					KAF157			810
0.32	14100	4423	77800	0.90				
0.37	12400	3889	79500	1.05	**K127**			475
0.43	10400	3311	80500	1.25	**KF127**	**R77**	**DRN80MK4**	520
0.48	9430	3009	80900	1.40	**KA127**			445
0.55	8100	2607	81400	1.60	**KAF127**			485
0.74	6260	1926	82000	2.1				
0.82	5710	1757	82100	2.3	**K127**			475
0.93	4970	1541	82300	2.6	**KF127**	**R77**	**DRN80MK4**	520
1.1	4360	1342	82400	3.0	**KA127**			445
1.2	3800	1177	82500	3.4	**KAF127**			485
1.4	3330	1025	82600	3.9				
0.48	9550	2977	65000	0.85	**K107**			315
0.55	8340	2599	65000	0.95	**KF107**	**R77**	**DRN80MK4**	325
0.63	7290	2286	65000	1.10	**KA107**			285
0.74	6180	1939	65000	1.30	**KAF107**			310

P_N = 0.55 kW

n_a min^{-1}	M_a Nm	i	F_{Ra} N	SEW f_B	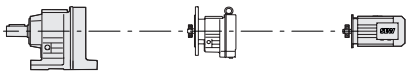			m kg
0.84	5590	1713	65000	1.45				
0.92	5070	1554	65000	1.60				
1.1	4360	1336	65000	1.85				
1.2	3810	1166	65000	2.1	**K107**			315
1.4	3270	1030	65000	2.5	**KF107**	**R77**	**DRN80MK4**	325
1.6	2840	904	65000	2.8	**KA107**			285
1.8	2580	793	65000	3.1	**KAF107**			310
2.1	2240	696	65000	3.6				
2.3	1930	615	65000	4.1				
1.0	4670	1430	40000	0.90				
1.1	4200	1261	40000	1.00				
1.3	3670	1102	40000	1.15				
1.5	3210	957	40000	1.35				
1.7	2870	855	40000	1.50	**K97**			185
1.9	2410	743	40000	1.80	**KF97**	**R57**	**DRN80MK4**	205
2.2	2120	652	40000	2.0	**KA97**			165
2.5	1910	573	40000	2.3	**KAF97**			190
2.9	1630	504	40000	2.7				
3.3	1400	437	40000	3.1				
3.8	1250	382	40000	3.4				
4.7	1010	305	40000	4.3				
1.5	3120	951	26700	0.85				
1.7	2730	837	27200	1.00				
2.0	2370	726	27700	1.15				
2.3	2100	638	28000	1.30				
2.6	1830	562	28200	1.45				
3.0	1550	474	28400	1.75	**K87**			125
3.4	1390	426	28500	1.95	**KF87**	**R57**	**DRN80MK4**	130
3.9	1220	373	28700	2.2	**KA87**			110
4.4	1060	330	28700	2.5	**KAF87**			125
4.9	950	294	28800	2.8				
5.7	830	250	28900	3.3				
6.1	780	236	28900	3.5				
7.1	660	201	28900	4.1				
3.0	1590	485	15100	0.95				
3.4	1410	428	16300	1.10				
3.9	1220	367	17400	1.25				
4.4	1080	328	18000	1.45	**K77**			74
5.0	960	290	18400	1.60	**KF77**	**R37**	**DRN80MK4**	82
5.7	830	252	18900	1.85	**KA77**			67
6.5	730	221	19200	2.1	**KAF77**			75
7.4	645	195	19400	2.4				
8.2	570	175	19600	2.7				
9.3	505	154	19700	3.1				
5.1	920	279	9330	0.95				
5.9	810	246	10400	1.10				
6.6	720	217	11100	1.15	**K67**			50
7.5	630	191	11700	1.30	**KF67**	**R37**	**DRN80MK4**	56
8.6	545	166	12200	1.55	**KA67**			47
10	480	144	12500	1.80	**KAF67**			53
12	405	122	12800	2.1				

P_N = 0.55 kW

n_a min^{-1}	M_a Nm	i	F_{Ra} N	SEW f_B	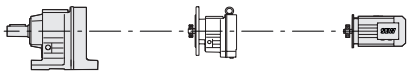			m kg
7.5	635	192	7360	1.00				
8.6	550	166	8050	1.15	**K57**			44
9.9	480	145	8510	1.30	**KF57**	**R37**	**DRN80MK4**	49
11	430	129	8740	1.40	**KA57**			42
13	370	111	9020	1.70	**KAF57**			48
15	325	97	9200	1.90				
8.2	565	176	9000	0.90	**K49**			48
9.5	480	152	9000	1.05	**KF49**	**R37**	**DRN80MK4**	50
11	400	125	9000	1.25	**KA49**			45
15	315	99	9000	1.60	**KAF49**			50
					K47			38
8.4	565	171	7410	0.80	**KF47**	**R37**	**DRN80MK4**	42
9.4	505	153	7850	0.90	**KA47**			37
					KAF47			40
4.9	1070	197.37	28700	2.5	**K87**			110
5.6	950	174.19	28800	2.9	**KF87**			120
5.9	890	164.34*	28800	3.0	**KA87**	**-**	**DRN90SR6**	97
6.6	800	147.32*	28900	3.4	**KAF87**			110
6.3	840	154.02	18900	1.85	**K77**			73
7.1	735	135.28	19200	2.1	**KF77**			82
7.5	700	128.52	19300	2.2	**KA77**	**-**	**DRN90SR6**	66
8.5	615	113.56	19500	2.5	**KAF77**			74
9.3	565	154.02	19600	2.8				
11	470	128.52	19700	3.3	**K77**			65
11	495	135.28	19700	3.1	**KF77**			73
13	415	113.56	19800	3.7	**KA77**	**-**	**DRN80MK4**	58
15	355	97.05	19900	4.4	**KAF77**			65
7.8	670	123.54	11500	1.30				
8.9	585	108.03	12000	1.50	**K67**			47
9.4	560	102.62	12100	1.55	**KF67**			53
11	490	90.04	12500	1.80	**KA67**	**-**	**DRN90SR6**	44
13	415	76.37	12800	2.1	**KAF67**			50
12	450	123.54	12600	1.90	**K67**			39
13	395	108.03	12800	2.2	**KF67**			45
16	330	90.04	13000	2.6	**KA67**	**-**	**DRN80MK4**	36
19	280	76.37	13000	3.1	**KAF67**			42
8.9	590	108.29	7720	1.05				
9.4	560	102.88*	7960	1.15				
11	490	90.26*	8460	1.30	**K57**			41
13	415	76.56*	8810	1.50	**KF57**			46
14	375	69.12	8990	1.70	**KA57**	**-**	**DRN90SR6**	39
16	330	60.81*	9170	1.90	**KAF57**			45
17	310	57.42*	9240	2.0				
12	455	123.85	8640	1.40				
13	395	108.29	8900	1.60				
14	375	102.88*	8980	1.65	**K57**			33
16	330	90.26*	9170	1.90	**KF57**			38
19	280	76.56*	9360	2.3	**KA57**	**-**	**DRN80MK4**	31
21	255	69.12	9460	2.5	**KAF57**			37
24	225	60.81*	9560	2.8				
25	210	57.42*	9600	3.0				

P_N = 0.55 kW

n_a min^{-1}	M_a Nm	i	F_{Ra} N	SEW f_B	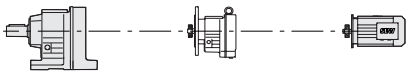			m kg
19	275	75.20*	9000	1.75	**K49** **KF49** **KA49** **KAF49**	-	**DRN80MK4**	40
20	255	70.19	9000	1.75				41
24	220	60.27	9000	2.3				37
27	194	52.94	9000	2.6				42
29	184	50.29*	9000	2.7				
32	163	44.44	9000	3.1				
38	139	37.98*	9000	3.6				
14	380	104.37	8750	1.20	**K47** **KF47** **KA47** **KAF47**	-	**DRN80MK4**	27
16	335	90.86	9120	1.35				31
17	310	85.12*	9270	1.45				27
19	275	75.20*	9230	1.65				29
21	255	69.84	9100	1.75				
23	230	63.30*	8920	1.95				
25	210	56.83	8720	2.2				
29	179	48.95*	8430	2.5				
31	168	46.03*	8310	2.7				
25	215	58.24*	7500	1.40	**K39** **KF39** **KA39** **KAF39**	-	**DRN80MK4**	26
29	182	49.69	7500	1.65				28
33	159	43.45	7500	1.90				25
35	151	41.28*	7500	2.0				27
40	133	36.22	7500	2.3				
47	112	30.72*	7500	2.7				
52	102	27.73	7310	3.0				
59	89	24.40*	7070	3.4				
62	84	23.04*	6970	3.6				
24	215	58.60	4830	1.05	**K37** **KF37** **KA37** **KAF37**	-	**DRN80MK4**	21
29	182	49.79	4770	1.25				23
32	163	44.46	4710	1.40				21
38	139	37.97	4600	1.65				23
40	130	35.57	4560	1.75				
48	110	29.96	4430	2.0				
50	106	28.83	4390	2.2				
57	91	24.99	4270	2.5				
61	85	23.36	4210	2.7				
71	74	20.19	4080	2.5				
84	63	17.15	3930	2.9				
94	56	15.31	3830	3.1				
110	48	13.08	3680	3.5				
118	44	12.14	3610	3.6				
137	38	10.49	3470	4.2				
39	135	36.96	4380	0.90	**K29** **KF29** **KA29** **KAF29**	-	**DRN80MK4**	15
48	109	29.69	4360	1.20				16
48	110	30.11	4250	1.05				15
53	100	27.23	4290	1.30				16
58	91	24.91*	4120	1.20				
62	85	23.19	4150	1.55				
65	81	22.08	4020	1.30				
72	73	19.99	4020	1.80				
88	60	16.29	3830	2.2				
107	49	13.47	3650	2.6				
120	44	11.94	3540	3.0				
145	36	9.90	3460	3.0				
168	31	8.53	3310	3.9				

P_N = 0.55 kW

n_a min^{-1}	M_a Nm	i	F_{Ra} N	SEW f_B	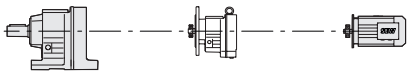			m kg
60	88	24.06	3700	0.90				
65	80	21.98	3640	1.00				
77	68	18.55	3520	1.20				
91	58	15.84	3410	1.40				
98	54	14.69	3350	1.50				
113	47	12.70	3240	1.70				
121	43	11.84	3190	1.80	**K19**			14
139	38	10.32*	3080	2.0	**KF19**	-	**DRN80MK4**	14
150	35	9.58	3110	1.80	**KA19**			13
177	30	8.09	2960	2.7	**KAF19**			13
208	25	6.91	2830	3.2				
224	23	6.41*	2770	3.4				
259	20	5.54	2660	4.0				
278	19	5.16	2600	4.2				
319	16	4.50*	2500	4.9				
295	18	9.58	2560	3.5	**K19**			11
349	15	8.09	2430	5.3	**KF19**	-	**DRN71M2**	12
409	13	6.91	2320	6.2	**KA19**			11
441	12	6.41*	2270	6.7	**KAF19**			11

P_N = 0.75 kW

n_a min^{-1}	M_a Nm	i	F_{Ra} N	SEW f_B	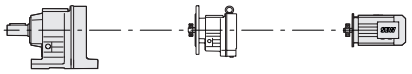			m kg
0.10	60700	14272	190000	0.85				
0.11	55300	13116	190000	0.95				
0.12	48500	11647	190000	1.10				
0.14	42700	10413	190000	1.25				
0.15	37800	9363	190000	1.40				
0.18	32100	8126	190000	1.65	**K187**			1770
0.20	31200	7343	190000	1.70	**KH187**	**R97**	**DRN80M4**	1700
0.21	28500	6747	190000	1.85				
0.24	24900	5991	190000	2.1				
0.27	22000	5358	190000	2.4				
0.30	19400	4817	190000	2.7				
0.33	17600	4370	190000	3.0				
0.40	15600	3609	190000	3.4				
0.47	13200	3062	190000	4.0				
0.57	10600	2519	190000	5.0				
0.63	9410	2268	190000	5.6				
0.70	8390	2054	190000	6.3	**K187**	**R97**	**DRN80M4**	1770
0.79	7280	1821	190000	7.3	**KH187**			1700
0.90	6560	1605	190000	8.1				
1.2	4780	1196	190000	11				
1.4	4180	1046	190000	12				
0.14	43800	10264	150000	0.80				
0.17	36700	8628	150000	0.95				
0.22	27900	6562	150000	1.25				
0.27	22300	5355	150000	1.55	**K167**	**R97**	**DRN80M4**	1190
0.30	19600	4788	150000	1.80	**KH167**			1150
0.35	17200	4079	150000	2.0				
0.43	14400	3376	150000	2.4				
0.52	11500	2755	150000	3.1				

P_N = 0.75 kW

n_a min^{-1}	M_a Nm	i	F_{Ra} N	SEW f_B	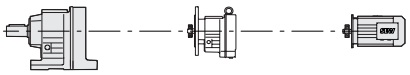			m kg
0.66	9420	2182	150000	3.7				
0.85	7270	1704	150000	4.8				
1.0	6060	1408	150000	5.8				
1.1	5530	1296	150000	6.3	**K167**	**R97**	**DRN80M4**	1190
1.3	4400	1101	150000	8.0	**KH167**			1150
1.5	3860	944	150000	9.1				
2.3	2530	632	150000	13				
3.0	1920	481	150000	18				
0.28	20500	5074	110800	1.00				
0.32	18200	4514	112100	1.10				
0.36	16900	3979	112700	1.20	**K157**			800
0.41	14400	3516	113800	1.40	**KF157**	**R97**	**DRN80M4**	870
0.47	13000	3051	114300	1.55	**KA157**			760
0.55	10500	2610	115100	1.90	**KAF157**			820
0.62	9380	2322	115400	2.1				
0.87	7140	1659	115900	2.8				
1.1	5750	1365	116200	3.5				
1.2	5100	1229	116300	3.9	**K157**			790
1.3	4540	1093	116400	4.4	**KF157**	**R97**	**DRN80M4**	870
1.5	3910	942	116400	5.1	**KA157**			760
1.7	3490	854	116500	5.7	**KAF157**			810
2.5	2260	567	116600	8.8				
2.9	2010	504	116600	9.9				
0.43	14400	3311	77100	0.90	**K127**			480
0.48	13100	3009	79100	1.00	**KF127**	**R77**	**DRN80M4**	520
0.55	11300	2607	80100	1.15	**KA127**			450
					KAF127			490
0.75	8620	1926	81200	1.50				
0.82	7860	1757	81500	1.65				
0.93	6860	1541	81800	1.90	**K127**			475
1.1	6000	1342	82100	2.2	**KF127**	**R77**	**DRN80M4**	520
1.2	5240	1177	82200	2.5	**KA127**			450
1.4	4590	1025	82400	2.8	**KAF127**			485
1.6	4000	899	82500	3.3				
0.84	7690	1713	65000	1.05				
0.93	6980	1554	65000	1.15				
1.1	6000	1336	65000	1.35				
1.2	5240	1166	65000	1.55	**K107**			315
1.4	4530	1030	65000	1.75	**KF107**	**R77**	**DRN80M4**	330
1.6	3950	904	65000	2.0	**KA107**			290
1.8	3550	793	65000	2.3	**KAF107**			315
2.1	3100	696	65000	2.6				
2.3	2690	615	65000	3.0				
1.3	5020	1102	39900	0.85				
1.5	4400	957	40000	1.00				
1.7	3930	855	40000	1.10				
1.9	3320	743	40000	1.30				
2.2	2920	652	40000	1.45				
2.5	2620	573	40000	1.65	**K97**			185
2.9	2240	504	40000	1.90	**KF97**	**R57**	**DRN80M4**	205
3.3	1930	437	40000	2.2	**KA97**			170
3.8	1720	382	40000	2.5	**KAF97**			195
4.7	1390	305	40000	3.1				
5.6	1170	258	40000	3.7				
6.2	1050	232	40000	4.1				
7.2	900	199	40000	4.8				

P_N = 0.75 kW

n_a min^{-1}	M_a Nm	i	F_{Ra} N	SEW f_B	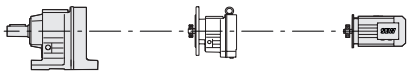			m kg
2.0	3260	726	26500	0.85	**K87 KF87 KA87 KAF87**	**R57**	**DRN80M4**	125
2.3	2880	638	27100	0.95				135
2.6	2520	562	27500	1.05				115
3.0	2130	474	27900	1.25				125
3.4	1910	426	28100	1.40				
3.9	1680	373	28300	1.60				
4.4	1470	330	28500	1.85				
4.9	1310	294	28600	2.1				
5.8	1140	250	28700	2.4				
6.1	1070	236	28700	2.5				
7.2	910	201	28800	3.0				
3.9	1670	367	14500	0.95	**K77 KF77 KA77 KAF77**	**R37**	**DRN80M4**	78
4.4	1490	328	15800	1.05				86
5.0	1320	290	16800	1.20				70
5.7	1140	252	17700	1.35				78
6.5	1000	221	18300	1.55				
12	550	125	9000	0.90	**K49 KF49 KA49 KAF49**	**R37**	**DRN80M4**	51
15	430	99	9000	1.15				53
								48
								53
13	510	112	7800	0.90	**K47 KF47 KA47 KAF47**	**R37**	**DRN80M4**	42
								45
								41
								44
19	330	75	7500	0.90	**K39 KF39 KA39 KAF39**	**R17**	**DRN80M4**	32
								34
								31
								33
5.5	1300	174.19	28600	2.1	**K87 KF87 KA87 KAF87**	-	**DRN90S6**	110
5.8	1230	164.34*	28700	2.2				120
6.5	1100	147.32*	28700	2.5				97
7.5	950	126.91*	28800	2.8				110
7.3	980	197.37	28800	2.8	**K87 KF87 KA87 KAF87**	-	**DRN80M4**	105
8.3	870	174.19	28900	3.1				115
8.8	820	164.34*	28900	3.3				92
9.8	735	147.32*	28900	3.7				105
7.1	1010	135.28	18300	1.55	**K77 KF77 KA77 KAF77**	-	**DRN90S6**	73
7.5	960	128.52	18500	1.60				82
8.4	850	113.56	18800	1.80				66
9.9	725	97.05	19200	2.1				74
11	665	88.97	19300	2.3				
9.4	765	154.02	19100	2.0	**K77 KF77 KA77 KAF77**	-	**DRN80M4**	69
11	640	128.52	19400	2.4				77
11	675	135.28	19300	2.3				61
13	565	113.56	19600	2.7				69
15	485	97.05	19700	3.2				
12	615	123.54	11800	1.40	**K67 KF67 KA67 KAF67**	-	**DRN80M4**	43
13	535	108.03	12200	1.60				48
16	450	90.04	12600	1.95				40
19	380	76.37	12900	2.3				46
21	345	68.95	13000	2.5				
24	300	60.66	13000	2.9				
25	285	57.28	13000	3.1				

P_N = 0.75 kW

n_a min^{-1}	M_a Nm	i	F_{Ra} N	SEW f_B	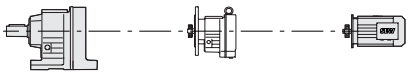			m kg
12	615	123.85	7500	1.00				
13	540	108.29	8120	1.15				
14	510	102.88*	8330	1.25				
16	450	90.26*	8660	1.40	**K57**			37
19	380	76.56*	8960	1.65	**KF57**	-	**DRN80M4**	41
21	345	69.12	9120	1.85	**KA57**			35
24	300	60.81*	9280	2.1	**KAF57**			40
25	285	57.42*	9340	2.2				
29	245	48.89	9490	2.6				
32	220	44.43	9560	2.9				
24	300	60.27	9000	1.65				
27	265	52.94	9000	1.90				
29	250	50.29*	9000	2.0	**K49**			43
32	220	44.44	9000	2.3	**KF49**	-	**DRN80M4**	45
38	189	37.98*	9000	2.7	**KA49**			40
41	173	34.81	9000	2.9	**KAF49**			45
47	152	30.55*	8960	3.3				
50	144	28.95*	8840	3.5				
19	375	75.20*	8480	1.20				
21	345	69.84	8410	1.30				
23	315	63.30*	8290	1.45				
25	285	56.83	8160	1.60	**K47**			31
29	245	48.95*	7950	1.85	**KF47**	-	**DRN80M4**	34
31	230	46.03*	7860	1.95	**KA47**			30
36	197	39.61	7630	2.3	**KAF47**			33
41	176	35.39	7450	2.6				
46	156	31.30	7250	2.9				
29	245	49.69	7500	1.20				
33	215	43.45	7500	1.40				
35	205	41.28*	7500	1.45				
40	180	36.22	7390	1.65	**K39**			30
47	153	30.72*	7140	1.95	**KF39**	-	**DRN80M4**	31
52	138	27.73	6990	2.2	**KA39**			29
59	121	24.40*	6790	2.5	**KAF39**			30
63	115	23.04*	6700	2.6				
73	98	19.62	6450	3.0				
81	89	17.83	6290	3.3				
93	77	15.44	6070	3.7				
32	220	44.46	4170	1.05				
38	189	37.97	4140	1.20				
40	177	35.57	4130	1.30				
48	149	29.96	4060	1.50				
50	143	28.83	4040	1.60				
58	124	24.99	3970	1.85	**K37**			24
62	116	23.36	3930	2.0	**KF37**	-	**DRN80M4**	27
71	100	20.19	3840	1.85	**KA37**			24
84	85	17.15	3720	2.1	**KAF37**			26
94	76	15.31	3640	2.3				
110	65	13.08	3520	2.5				
119	60	12.14	3460	2.7				
137	52	10.49	3350	3.1				
162	44	8.91	3210	3.6				
181	40	7.96	3120	3.9				

P_N = 0.75 kW

n_a min^{-1}	M_a Nm	i	F_{Ra} N	SEW f_B	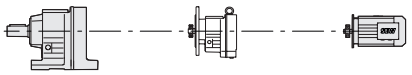			m kg
58	124	24.91*	3780	0.90				
62	115	23.19	3870	1.15				
65	110	22.08	3730	0.95				
72	99	19.99	3780	1.30				
88	81	16.29	3630	1.60	**K29**			19
107	67	13.47	3490	1.95	**KF29**	-	**DRN80M4**	20
121	59	11.94	3400	2.2	**KA29**			18
146	49	9.90	3370	2.2	**KAF29**			19
157	46	9.17	3190	2.9				
169	42	8.53	3230	2.9				
193	37	7.48	3030	3.3				
207	35	6.95	3050	3.2				
78	92	18.55	3270	0.85				
91	79	15.84	3190	1.00				
98	73	14.69	3150	1.10				
113	63	12.70	3060	1.25				
122	59	11.84	3020	1.35	**K19**			17
140	51	10.32*	2940	1.50	**KF19**	-	**DRN80M4**	17
178	40	8.09	2870	2.0	**KA19**			16
208	34	6.91	2760	2.3	**KAF19**			17
225	32	6.41*	2700	2.5				
260	28	5.54	2600	2.9				
279	26	5.16	2550	3.1				
320	22	4.50*	2450	3.6				
298	24	9.58	2500	2.6	**K19**			17
353	20	8.09	2380	3.9	**KF19**	-	**DRN80MS2**	17
413	17	6.91	2280	4.6	**KA19**			16
446	16	6.41*	2230	5.0	**KAF19**			17

P_N = 1.1 kW

n_a min^{-1}	M_a Nm	i	F_{Ra} N	SEW f_B	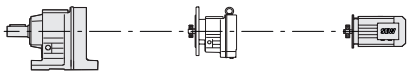			m kg
0.14	64200	10413	190000	0.80				
0.16	57200	9363	190000	0.95				
0.18	48900	8126	190000	1.10				
0.20	46400	7343	190000	1.15				
0.22	42400	6747	190000	1.25	**K187** **KH187**	**R97**	**DRN90S4**	1780 1710
0.24	37300	5991	190000	1.40				
0.27	33100	5358	190000	1.60				
0.30	29400	4817	190000	1.80				
0.33	26700	4370	190000	2.0				
0.40	23100	3609	190000	2.3				
0.48	19600	3062	190000	2.7				
0.58	15900	2519	190000	3.3				
0.64	14200	2268	190000	3.7				
0.71	12700	2054	190000	4.2	**K187** **KH187**	**R97**	**DRN90S4**	1770 1710
0.80	11100	1821	190000	4.8				
0.91	9920	1605	190000	5.3				
1.2	7280	1196	190000	7.3				
1.4	6370	1046	190000	8.3				

P_N = 1.1 kW

n_a min^{-1}	M_a Nm	i	F_{Ra} N	SEW f_B	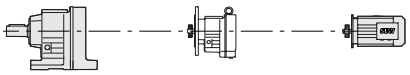			m kg
0.22	41500	6562	150000	0.85				
0.27	33400	5355	150000	1.05				
0.30	29500	4788	150000	1.20	**K167**	**R97**	**DRN90S4**	1190
0.36	25600	4079	150000	1.35	**KH167**			1160
0.43	21300	3376	150000	1.65				
0.53	17200	2755	150000	2.0				
0.67	14000	2182	150000	2.5				
0.85	10800	1704	150000	3.2				
1.0	9010	1408	150000	3.9				
1.1	8250	1296	150000	4.2	**K167**	**R97**	**DRN90S4**	1190
1.3	6710	1101	150000	5.2	**KH167**			1150
1.5	5840	944	150000	6.0				
2.3	3850	632	150000	9.1				
3.0	2930	481	150000	11				
0.37	25200	3979	107800	0.80				
0.41	21700	3516	110100	0.90	**K157**			800
0.48	19300	3051	111500	1.05	**KF157**	**R97**	**DRN90S4**	880
0.56	15900	2610	113200	1.25	**KA157**			760
0.63	14200	2322	113900	1.40	**KAF157**			820
0.88	10600	1659	115100	1.90				
1.1	8610	1365	115600	2.3				
1.2	7670	1229	115800	2.6	**K157**			800
1.3	6830	1093	116000	2.9	**KF157**	**R97**	**DRN90S4**	880
1.5	5890	942	116200	3.4	**KA157**			760
1.7	5280	854	116300	3.8	**KAF157**			820
2.6	3450	567	116500	5.8				
2.9	3070	504	116500	6.5				
0.76	12700	1926	79400	1.05				
0.83	11500	1757	80000	1.15				
0.94	10100	1541	80600	1.30				
1.1	8820	1342	81200	1.45				
1.2	7710	1177	81600	1.70	**K127**			480
1.4	6730	1025	81900	1.95	**KF127**	**R77**	**DRN90S4**	520
1.6	5890	899	82100	2.2	**KA127**			455
1.8	5070	790	82300	2.6	**KAF127**			490
2.1	4590	704	82400	2.8				
2.4	3950	610	82500	3.3				
2.7	3570	549	82600	3.6				
3.1	3060	477	82600	4.3				
1.3	7680	1166	65000	1.05				
1.4	6690	1030	65000	1.20				
1.6	5840	904	65000	1.35				
1.8	5210	793	65000	1.55				
2.1	4560	696	65000	1.75	**K107**			320
2.4	3980	615	65000	2.0	**KF107**	**R77**	**DRN90S4**	335
2.8	3370	522	65000	2.4	**KA107**			295
3.2	2960	461	65000	2.7	**KAF107**			320
3.6	2620	408	65000	3.1				
4.0	2370	364	65000	3.4				
4.6	2070	318	65000	3.9				

P_N = 1.1 kW

n_a min^{-1}	M_a Nm	i	F_{Ra} N	SEW f_B	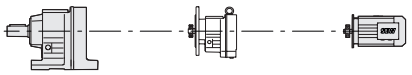			m kg
2.0	4880	743	40000	0.90				
2.2	4290	652	40000	1.00				
2.5	3830	573	40000	1.10	**K97**			195
2.9	3300	504	40000	1.30	**KF97**	**R57**	**DRN90S4**	215
3.3	2850	437	40000	1.50	**KA97**			175
3.8	2520	382	40000	1.70	**KAF97**			200
4.3	2220	342	40000	1.95				
3.1	3120	474	26700	0.85				
3.4	2810	426	27200	0.95				
3.9	2470	373	27600	1.10	**K87**			130
4.4	2160	330	27900	1.25	**KF87**	**R57**	**DRN90S4**	140
5.0	1930	294	28100	1.40	**KA87**			120
5.8	1670	250	28300	1.60	**KAF87**			135
6.2	1570	236	28400	1.70				
7.2	1330	201	28600	2.0				
5.4	1930	176.05*	40000	2.2	**K97**			170
6.3	1680	153.21*	40000	2.6	**KF97**	-	**DRN90L6**	190
6.8	1540	140.28	40000	2.8	**KA97**			155
7.7	1360	123.93*	40000	3.2	**KAF97**			180
8.3	1270	176.05*	40000	3.4	**K97**			170
9.5	1110	153.21*	40000	3.9	**KF97**	-	**DRN90S4**	190
10	1010	140.28	40000	4.3	**KA97**			150
					KAF97			175
					K87			110
6.5	1620	147.32*	28400	1.65	**KF87**	-	**DRN90L6**	120
7.5	1390	126.91*	28500	1.95	**KA87**			100
					KAF87			115
8.4	1260	174.19	28600	2.2				
8.9	1190	164.34*	28700	2.3	**K87**			110
9.9	1060	147.32*	28800	2.5	**KF87**	-	**DRN90S4**	120
11	920	126.91*	28800	3.0	**KA87**			97
13	840	115.82	28900	3.2	**KAF87**			110
					K77			77
8.4	1250	113.56	17200	1.25	**KF77**	-	**DRN90L6**	85
9.9	1070	97.05	18000	1.45	**KA77**			69
					KAF77			77
11	930	128.52	18600	1.65				
11	980	135.28	18400	1.60				
13	820	113.56	18900	1.90	**K77**			73
15	700	97.05	19300	2.2	**KF77**	-	**DRN90S4**	82
16	640	88.97	19400	2.4	**KA77**			66
19	565	78.07	19600	2.8	**KAF77**			74
20	535	73.99	19600	2.9				
13	780	108.03	10700	1.10				
14	740	102.62	11000	1.15				
16	650	90.04	11600	1.35				
19	550	76.37	12200	1.60	**K67**			49
21	500	68.95	12400	1.75	**KF67**	-	**DRN90S4**	54
24	440	60.66	12700	2.0	**KA67**			46
25	415	57.28	12800	2.1	**KAF67**			52
30	350	48.77	13000	2.4				
33	320	44.32	13000	2.6				
38	275	38.39	13000	2.9				

P_N = 1.1 kW

n_a min^{-1}	M_a Nm	i	F_{Ra} N	SEW f_B	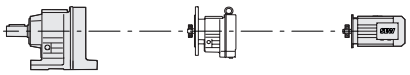			m kg
16	650	90.26*	6280	0.95				
19	555	76.56*	8010	1.15				
21	500	69.12	8420	1.25				
24	440	60.81*	8710	1.45				
25	415	57.42*	8820	1.50				
30	355	48.89	9080	1.80				
33	320	44.43	9210	1.95				
38	280	38.49	9370	2.3				
41	260	35.70	9440	2.4				
48	220	30.28	9570	2.9				
53	197	27.34	9430	3.2	**K57**			43
60	174	24.05	9130	3.5	**KF57**	-	**DRN90S4**	48
64	164	22.71	9000	3.7	**KA57**			41
75	140	19.34	8640	4.1	**KAF57**			47
83	127	17.57	8420	4.4				
96	110	15.22	8100	4.9				
110	96	13.25	7790	5.3				
122	86	11.92	7490	4.8				
129	81	11.26	7370	5.1				
152	69	9.59	7040	5.9				
167	63	8.71	6850	6.2				
193	54	7.55	6570	6.7				
222	47	6.57	6310	7.3				
310	34	4.69	5700	8.9				
24	435	60.27	9000	1.15				
27	380	52.94	9000	1.30				
29	365	50.29*	9000	1.40				
33	320	44.44	9000	1.55				
38	275	37.98*	8800	1.80	**K49**			48
42	250	34.81	8660	2.0	**KF49**	-	**DRN90S4**	50
48	220	30.55*	8430	2.3	**KA49**			45
50	210	28.95*	8340	2.4	**KAF49**			50
57	183	25.34	8100	2.7				
64	165	22.83	7910	3.0				
73	145	20.03	7660	3.5				
26	410	56.83	7180	1.10				
30	355	48.95*	7100	1.25				
32	330	46.03*	7060	1.35				
37	285	39.61	6940	1.55	**K47**			37
41	255	35.39	6830	1.75	**KF47**	-	**DRN90S4**	40
46	225	31.30	6700	2.0	**KA47**			36
50	210	29.32	6620	2.1	**KAF47**			39
56	187	25.91	6470	2.4				
67	157	21.81	6250	2.9				
74	141	19.58	6110	3.0				

P_N = 1.1 kW

n_a min^{-1}	M_a Nm	i	F_{Ra} N	SEW f_B	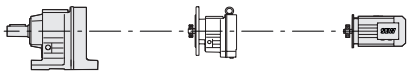			m kg
29	360	49.69	6810	0.85				
33	315	43.45	6760	0.95				
35	300	41.28*	6740	1.00				
40	260	36.22	6660	1.15				
47	220	30.72*	6520	1.35				
52	200	27.73	6430	1.50				
60	176	24.40*	6290	1.70	**K39**			36
63	166	23.04*	6230	1.80	**KF39**	-	**DRN90S4**	38
74	142	19.62	6040	2.1	**KA39**			35
82	129	17.83	5920	2.3	**KAF39**			37
94	111	15.44	5740	2.5				
108	97	13.44*	5560	2.8				
114	92	12.73	5760	2.7				
120	87	12.09*	5680	2.9				
137	77	10.61	5480	3.7				
49	215	29.96	3430	1.00				
58	180	24.99	3440	1.25				
62	169	23.36	3430	1.35				
72	146	20.19	3410	1.25				
85	124	17.15	3360	1.45				
95	111	15.31	3310	1.60				
111	94	13.08	3240	1.75	**K37**			30
120	88	12.14	3200	1.85	**KF37**	-	**DRN90S4**	33
139	76	10.49	3120	2.1	**KA37**			30
163	64	8.91	3020	2.5	**KAF37**			32
183	57	7.96	2950	2.7				
214	49	6.80	2850	3.1				
229	46	6.37	2810	3.2				
271	39	5.36	2690	3.6				
366	29	3.98	2490	4.4				
73	144	19.99	3360	0.90				
89	118	16.29	3290	1.10				
108	97	13.47	3210	1.35				
122	86	11.94	3150	1.50				
147	71	9.90	3210	1.55	**K29**			25
159	66	9.17	2990	1.95	**KF29**	-	**DRN90S4**	26
171	62	8.53	3100	2.0	**KA29**			24
195	54	7.48	2870	2.3	**KAF29**			25
209	50	6.95	2940	2.2				
253	42	5.75	2800	2.7				
285	37	5.10	2710	3.0				
115	92	12.70	2760	0.85				
123	85	11.84	2740	0.90				
141	75	10.32*	2690	1.00				
180	58	8.09	2720	1.35	**K19**			23
211	50	6.91	2620	1.60	**KF19**	-	**DRN90S4**	23
227	46	6.41*	2580	1.75	**KA19**			22
263	40	5.54	2490	2.0	**KAF19**			23
282	37	5.16	2440	2.2				
323	32	4.50*	2360	2.5				

P_N = 1.5 kW

n_a min^{-1}	M_a Nm	i	F_{Ra} N	SEW f_B	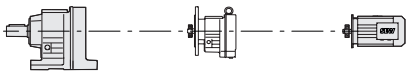			m kg
0.20	63900	7343	190000	0.85				
0.22	58500	6747	190000	0.90				
0.24	51600	5991	190000	1.05	**K187**	**R97**	**DRN90L4**	1780
0.27	45800	5358	190000	1.15	**KH187**			1710
0.30	40900	4817	190000	1.30				
0.33	37100	4370	190000	1.45				
0.40	31900	3609	190000	1.65				
0.48	27000	3062	190000	1.95				
0.58	22000	2519	190000	2.4				
0.64	19600	2268	190000	2.7	**K187**			1780
0.71	17600	2054	190000	3.0	**KH187**	**R97**	**DRN90L4**	1710
0.80	15500	1821	190000	3.4				
0.91	13800	1605	190000	3.8				
1.2	10200	1196	190000	5.2				
1.4	8890	1046	190000	6.0				
0.31	40900	4788	150000	0.85				
0.36	35400	4079	150000	1.00	**K167**	**R97**	**DRN90L4**	1200
0.43	29400	3376	150000	1.20	**KH167**			1160
0.53	23700	2755	150000	1.45				
0.67	19300	2182	150000	1.80				
0.86	15000	1704	150000	2.3				
1.0	12400	1408	150000	2.8				
1.1	11400	1296	150000	3.1	**K167**	**R97**	**DRN90L4**	1190
1.3	9360	1101	150000	3.7	**KH167**			1160
1.6	8110	944	150000	4.3				
2.3	5370	632	150000	6.5				
3.0	4090	481	150000	8.6				
					K157			800
0.56	22200	2610	109800	0.90	**KF157**	**R97**	**DRN90L4**	880
0.63	19700	2322	111300	1.00	**KA157**			770
					KAF157			830
0.88	14600	1659	113700	1.35				
1.1	11900	1365	114700	1.70				
1.2	10600	1229	115100	1.90	**K157**			800
1.3	9470	1093	115400	2.1	**KF157**	**R97**	**DRN90L4**	880
1.6	8160	942	115700	2.5	**KA157**			760
1.7	7330	854	115900	2.7	**KAF157**			820
2.6	4820	567	116300	4.2				
2.9	4290	504	116400	4.7				
					K127			510
2.7	4640	536	82400	2.8	**KF127**			550
3.5	3660	418	82600	3.6	**KA127**	**R87**	**DRN90L4**	480
4.0	3220	367	82600	4.0	**KAF127**			520
0.83	15800	1757	74400	0.80				
0.95	13800	1541	78300	0.95				
1.1	12100	1342	79700	1.10				
1.2	10500	1177	80400	1.25				
1.4	9210	1025	81000	1.40	**K127**			485
1.6	8060	899	81400	1.60	**KF127**	**R77**	**DRN90L4**	530
1.9	6970	790	81800	1.85	**KA127**			455
2.1	6290	704	82000	2.1	**KAF127**			495
2.4	5420	610	82200	2.4				
2.7	4890	549	82300	2.7				
3.1	4210	477	82500	3.1				
3.5	3730	418	82500	3.5				

P_N = 1.5 kW

n_a min^{-1}	M_a Nm	i	F_{Ra} N	SEW f_B	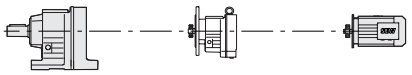			m kg
1.4	9180	1030	65000	0.85				
1.6	8020	904	65000	1.00				
1.8	7120	793	65000	1.10				
2.1	6230	696	65000	1.30	**K107**			325
2.4	5460	615	65000	1.45	**KF107**	**R77**	**DRN90L4**	335
2.8	4630	522	65000	1.75	**KA107**			300
3.2	4080	461	65000	1.95	**KAF107**			320
3.6	3600	408	65000	2.2				
4.0	3250	364	65000	2.5				
4.6	2840	318	65000	2.8				
2.6	5230	573	39600	0.80				
2.9	4520	504	40000	0.95				
3.4	3900	437	40000	1.10				
3.8	3440	382	40000	1.25	**K97**			195
4.3	3050	342	40000	1.40	**KF97**	**R57**	**DRN90L4**	215
4.8	2780	305	40000	1.55	**KA97**			180
5.7	2340	258	40000	1.85	**KAF97**			205
6.3	2110	232	40000	2.0				
7.3	1800	199	40000	2.4				
4.4	2960	330	27000	0.90				
5.0	2650	294	27400	1.00	**K87**			135
5.8	2280	250	27800	1.20	**KF87**	**R57**	**DRN90L4**	145
6.2	2150	236	27900	1.25	**KA87**			125
7.3	1820	201	28200	1.50	**KAF87**			135
8.0	1650	183	28400	1.65				
5.5	2620	176.05*	40000	1.65	**K97**			185
6.3	2280	153.21*	40000	1.90	**KF97**	-	**DRN100L6**	205
6.9	2090	140.28	40000	2.1	**KA97**			165
7.8	1850	123.93*	40000	2.3	**KAF97**			190
8.3	1730	176.05*	40000	2.5	**K97**			170
9.5	1500	153.21*	40000	2.9	**KF97**	-	**DRN90L4**	190
10	1380	140.28	40000	3.1	**KA97**			155
12	1220	123.93*	40000	3.5	**KAF97**			180
6.5	2200	147.32*	27900	1.25	**K87**			125
7.6	1890	126.91*	28200	1.45	**KF87**	-	**DRN100L6**	135
8.3	1730	115.82	28300	1.55	**KA87**			110
9.4	1530	102.71*	28400	1.75	**KAF87**			125
8.4	1710	174.19	28300	1.60				
8.9	1610	164.34*	28400	1.70				
9.9	1440	147.32*	28500	1.85	**K87**			110
12	1240	126.91*	28600	2.2	**KF87**	-	**DRN90L4**	120
13	1140	115.82	28700	2.4	**KA87**			100
14	1010	102.71*	28800	2.7	**KAF87**			115
17	850	86.34	28900	3.2				
8.5	1690	113.56	14300	0.90	**K77**			88
9.9	1450	97.05	16100	1.05	**KF77**	-	**DRN100L6**	96
11	1330	88.97	16800	1.15	**KA77**			80
12	1160	78.07	17600	1.35	**KAF77**			88

P_N = 1.5 kW

n_a min^{-1}	M_a Nm	i	F_{Ra} N	SEW f_B	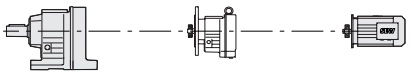			m kg
11	1260	128.52	17100	1.25				
11	1330	135.28	16800	1.15				
13	1110	113.56	17800	1.40				
15	950	97.05	18500	1.65				
16	870	88.97	18800	1.80	**K77**			77
19	765	78.07	19100	2.0	**KF77**	-	**DRN90L4**	85
20	725	73.99	19200	2.1	**KA77**			69
23	635	64.75	19400	2.4	**KAF77**			77
25	570	58.34	19600	2.7				
29	500	51.18	19700	3.1				
32	445	45.16	19800	3.5				
36	395	40.04	19900	4.0				
16	880	90.04	9710	1.00				
19	750	76.37	10900	1.15				
21	675	68.95	11400	1.30				
24	595	60.66	11900	1.45				
26	560	57.28	12100	1.55	**K67**			52
30	480	48.77	12500	1.80	**KF67**	-	**DRN90L4**	58
33	435	44.32	12700	1.90	**KA67**			49
38	375	38.39	12900	2.1	**KAF67**			55
41	350	35.62	13000	2.5				
48	295	30.22	13000	2.9				
54	265	27.28	13000	3.1				
61	235	24.00	13000	3.4				
24	595	60.81*	7660	1.05				
25	565	57.42*	7930	1.10				
30	480	48.89	8520	1.30				
33	435	44.43	8720	1.45				46
38	375	38.49	8980	1.65	**K57**			51
41	350	35.70	9090	1.80	**KF57**	-	**DRN90L4**	44
48	295	30.28	9130	2.1	**KA57**			50
53	270	27.34	8950	2.4	**KAF57**			
61	235	24.05	8710	2.6				
64	225	22.71	8600	2.7				
76	190	19.34	8300	3.0				
28	520	52.94	8280	0.95				
29	495	50.29*	8260	1.00				
33	435	44.44	8200	1.15				
38	370	37.98*	8080	1.35				
42	340	34.81	7990	1.45				51
48	300	30.55*	7850	1.65	**K49**			53
50	285	28.95*	7780	1.75	**KF49**	-	**DRN90L4**	48
58	250	25.34	7610	2.0	**KA49**			53
64	225	22.83	7470	2.2	**KAF49**			
73	196	20.03	7280	2.6				
83	173	17.67*	7090	2.9				
93	154	15.67	6900	3.2				
109	131	13.38	6650	3.6				

P_N = 1.5 kW

n_a min^{-1}	M_a Nm	i	F_{Ra} N	SEW f_B	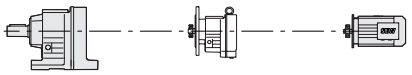			m kg
37	390	39.61	6170	1.15				
41	345	35.39	6140	1.30				
47	305	31.30	6090	1.45				
50	285	29.32	6050	1.55				
56	255	25.91	5970	1.75	**K47**			40
67	215	21.81	5830	2.1	**KF47**	-	**DRN90L4**	44
75	192	19.58	5730	2.2	**KA47**			39
87	165	16.86	5580	2.5	**KAF47**			42
92	155	15.86	5510	2.6				
107	134	13.65	5350	2.9				
120	120	12.19	5220	3.1				
124	115	11.77	5130	2.4				
40	355	36.22	5840	0.85				
48	300	30.72*	5830	1.00				
53	270	27.73	5800	1.10				
60	240	24.40*	5740	1.25				
63	225	23.04*	5710	1.35				
74	192	19.62	5600	1.55	**K39**			39
82	175	17.83	5520	1.65	**KF39**	-	**DRN90L4**	41
95	151	15.44	5390	1.85	**KA39**			38
109	132	13.44*	5260	2.1	**KAF39**			40
115	125	12.73	5560	2.0				
121	119	12.09*	5490	2.2				
138	104	10.61	5310	2.7				
162	88	9.00*	5080	3.4				
180	80	8.12*	4950	3.8				
63	230	23.36	2880	1.00				
72	198	20.19	2930	0.95				
85	168	17.15	2950	1.05				
95	150	15.31	2940	1.15				
112	128	13.08	2920	1.30				
120	119	12.14	2910	1.35	**K37**			33
139	103	10.49	2870	1.55	**KF37**	-	**DRN90L4**	36
164	87	8.91	2810	1.85	**KA37**			33
184	78	7.96	2760	2.0	**KAF37**			35
215	67	6.80	2680	2.3				
229	62	6.37	2650	2.3				
272	53	5.36	2560	2.7				
367	39	3.98	2400	3.2				
90	160	16.29	2910	0.80				
108	132	13.47	2890	1.00				
122	117	11.94	2870	1.10				
159	90	9.17	2780	1.45				
171	84	8.53	2950	1.45	**K29**			28
195	73	7.48	2690	1.70	**KF29**	-	**DRN90L4**	29
210	68	6.95	2820	1.65	**KA29**			27
254	56	5.75	2690	2.0	**KAF29**			28
287	50	5.10	2620	2.2				
373	38	3.92	2440	3.3				
458	31	3.19	2310	3.5				

P_N = 2.2 kW

n_a min^{-1}	M_a Nm	i	F_{Ra} N	SEW f_B	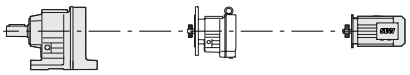			m kg
0.30	61700	4817	190000	0.85	**K187**	**R97**	**DRN100LS4**	1780
0.33	56000	4370	190000	0.95	**KH187**			1720
0.51	35200	2818	190000	1.50				
0.40	47600	3609	190000	1.10				
0.47	40400	3062	190000	1.30				
0.58	33000	2519	190000	1.60	**K187**	**R97**	**DRN100LS4**	1780
0.64	29600	2268	190000	1.80	**KH187**			1710
0.71	26600	2054	190000	2.0				
0.80	23500	1821	190000	2.3				
0.90	20800	1605	190000	2.6				
0.43	44000	3376	150000	0.80	**K167**	**R97**	**DRN100LS4**	1200
0.53	35600	2755	150000	1.00	**KH167**			1160
0.64	28600	2263	150000	1.20				
0.66	28800	2182	150000	1.20				
0.85	22400	1704	150000	1.55				
1.0	18600	1408	150000	1.90	**K167**	**R97**	**DRN100LS4**	1200
1.1	17000	1296	150000	2.1	**KH167**			1160
1.3	14200	1101	150000	2.5				
1.5	12200	944	150000	2.9				
0.80	22800	1805	109400	0.90	**K157** **KF157** **KA157** **KAF157**	**R97**	**DRN100LS4**	810 890 770 830
0.87	21900	1659	110000	0.90				
1.1	17900	1365	112200	1.10				
1.2	16000	1229	113100	1.25	**K157**	**R97**	**DRN100LS4**	800
1.3	14300	1093	113900	1.40	**KF157**			880
1.5	12300	942	114600	1.65	**KA157**			770
1.7	11100	854	115000	1.80	**KAF157**			830
1.9	9580	756	115400	2.1				
2.7	6990	536	81800	1.85				
3.1	6110	473	82000	2.1	**K127**			510
3.5	5510	418	82200	2.4	**KF127**	**R87**	**DRN100LS4**	550
4.0	4830	367	82300	2.7	**KA127**			480
4.4	4330	330	82400	3.0	**KAF127**			520
1.4	13700	1025	78600	0.95				
1.6	12000	899	79700	1.10				
1.8	10400	790	80500	1.25	**K127**			490
2.1	9370	704	80900	1.40	**KF127**	**R77**	**DRN100LS4**	530
2.4	8090	610	81400	1.60	**KA127**			460
2.6	7300	549	81700	1.80	**KAF127**			500
3.0	6300	477	82000	2.1				
3.5	5560	418	82200	2.3				
2.4	8150	615	65000	1.00				
2.8	6920	522	65000	1.15				
3.2	6090	461	65000	1.30	**K107**			330
3.6	5390	408	65000	1.50	**KF107**	**R77**	**DRN100LS4**	340
4.0	4840	364	65000	1.65	**KA107**			300
4.6	4230	318	65000	1.90	**KAF107**			325
5.1	3800	286	65000	2.1				
5.8	3330	251	65000	2.4				

P_N = 2.2 kW

n_a min^{-1}	M_a Nm	i	F_{Ra} N	SEW f_B	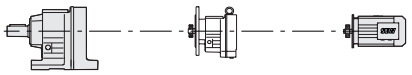			m kg
3.8	5110	382	39800	0.85				
4.2	4550	342	40000	0.95	**K97**			200
4.8	4120	305	40000	1.05	**KF97**	**R57**	**DRN100LS4**	220
5.6	3480	258	40000	1.25	**KA97**			180
6.3	3130	232	40000	1.35	**KAF97**			205
7.3	2690	199	40000	1.60				
6.4	3310	153.21*	40000	1.30	**K97**			190
6.9	3030	140.28	40000	1.40	**KF97**	**-**	**DRN112M6**	210
7.9	2680	123.93*	40000	1.60	**KA97**			175
9.3	2270	105.13	40000	1.90	**KAF97**			200
8.2	2550	176.05*	40000	1.70				
9.5	2220	153.21*	40000	1.95	**K97**			175
10	2030	140.28	40000	2.1	**KF97**	**-**	**DRN100LS4**	195
12	1800	123.93*	40000	2.4	**KA97**			160
14	1520	105.13	40000	2.8	**KAF97**			185
15	1400	96.80	40000	3.1				
9.8	2130	147.32*	27900	1.25				
11	1840	126.91*	28200	1.45				
13	1680	115.82	28300	1.60	**K87**			115
14	1490	102.71*	28500	1.80	**KF87**	**-**	**DRN100LS4**	125
17	1250	86.34	28600	2.2	**KA87**			105
18	1150	79.34	28700	2.4	**KAF87**			120
21	1020	70.46	28800	2.6				
23	910	63.00*	28800	3.0				
13	1650	113.56	14700	0.95				
15	1410	97.05	16300	1.10				
16	1290	88.97	17000	1.20				
19	1130	78.07	17800	1.35				
20	1070	73.99	18000	1.45				
22	940	64.75	18500	1.65	**K77**			81
25	850	58.34	18800	1.85	**KF77**	**-**	**DRN100LS4**	89
28	740	51.18	19200	2.1	**KA77**			73
32	655	45.16	19400	2.4	**KAF77**			81
36	580	40.04	19500	2.7				
41	510	35.20	19700	3.0				
47	445	30.89	19800	3.5				
50	425	29.27	19800	3.7				
57	370	25.62	19900	4.2				

P_N = 2.2 kW

n_a min^{-1}	M_a Nm	i	F_{Ra} N	SEW f_B	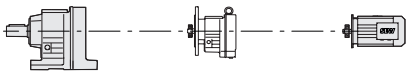			m kg
24	880	60.66	9750	1.00				
25	830	57.28	10200	1.05				
30	705	48.77	11200	1.20				
33	640	44.32	11600	1.30				
38	555	38.39	12100	1.45				
41	515	35.62	12300	1.70				
48	440	30.22	12700	2.0				
53	395	27.28	12800	2.1				
60	350	24.00	13000	2.3	**K67**			56
64	330	22.66	13000	2.4	**KF67**	-	**DRN100LS4**	61
75	280	19.30	13000	2.7	**KA67**			53
83	255	17.54	13000	2.9	**KAF67**			59
95	220	15.19	13000	3.2				
110	191	13.22	13000	3.5				
116	181	12.48	13000	2.9				
136	154	10.63	13000	3.3				
150	140	9.66	13000	3.4				
173	121	8.37	13000	3.6				
199	105	7.28	12700	4.0				
279	75	5.20	11600	4.6				
33	645	44.43	7040	1.00				
38	560	38.49	7970	1.15				
41	515	35.70	8290	1.20				
48	440	30.28	8230	1.45				
53	395	27.34	8140	1.60				
60	350	24.05	8000	1.75	**K57**			50
64	330	22.71	7930	1.80	**KF57**	-	**DRN100LS4**	55
75	280	19.34	7730	2.1	**KA57**			48
83	255	17.57	7590	2.2	**KAF57**			54
95	220	15.22	7380	2.4				
109	192	13.25	7170	2.7				
122	173	11.92	6850	2.4				
129	163	11.26	6770	2.5				
38	550	37.98*	6820	0.90				
42	505	34.81	6850	1.00				
47	445	30.55*	6840	1.15				
50	420	28.95*	6830	1.20				
57	365	25.34	6780	1.35				
64	330	22.83	6720	1.50	**K49**			55
72	290	20.03	6620	1.70	**KF49**	-	**DRN100LS4**	57
82	255	17.67*	6510	1.95	**KA49**			53
93	225	15.67	6400	2.2	**KAF49**			58
108	194	13.38	6220	2.4				
128	165	11.37*	6450	3.0				
139	151	10.42	6310	3.2				
159	132	9.14*	6090	3.8				
56	375	25.91	5100	1.20				
67	315	21.81	5090	1.40				
74	285	19.58	5070	1.50				
86	245	16.86	5010	1.70	**K47**			44
91	230	15.86	4980	1.75	**KF47**	-	**DRN100LS4**	47
106	198	13.65	4890	1.95	**KA47**			43
119	177	12.19	4810	2.1	**KAF47**			46
123	170	11.77	4710	1.65				
137	153	10.56	4640	1.85				
159	132	9.10	4520	2.1				

P_N = 2.2 kW

n_a min^{-1}	M_a Nm	i	F_{Ra} N	SEW f_B	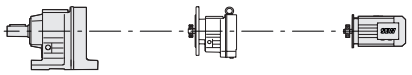			m kg
59	355	24.40*	4770	0.85	**K39** **KF39** **KA39** **KAF39**	-	**DRN100LS4**	43
63	335	23.04*	4800	0.90				45
74	285	19.62	4820	1.05				42
81	260	17.83	4820	1.10				44
94	225	15.44	4790	1.25				
108	195	13.44*	4730	1.40				
137	154	10.61	5040	1.85				
161	130	9.00*	4860	2.3				
178	118	8.12*	4740	2.6				
203	104	7.15*	4600	2.9				
215	98	6.75*	4530	3.1				
252	83	5.75	4350	3.3				
278	76	5.22	4240	3.4				
320	66	4.52	4080	3.7				
368	57	3.94*	3930	3.8				
111	190	13.08	2380	0.85	**K37** **KF37** **KA37** **KAF37**	-	**DRN100LS4**	37
138	152	10.49	2430	1.05				40
163	129	8.91	2440	1.25				37
182	115	7.96	2430	1.35				39
213	98	6.80	2400	1.50				
228	92	6.37	2390	1.55				
270	78	5.36	2340	1.80				
364	58	3.98	2240	2.2				

P_N = 3.0 kW

n_a min^{-1}	M_a Nm	i	F_{Ra} N	SEW f_B	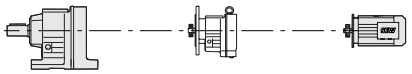			m kg
0.52	48700	2818	190000	1.10	**K187** **KH187**	**R97**	**DRN100L4**	1790 1720
0.40	65100	3609	190000	0.80	**K187** **KH187**	**R97**	**DRN100L4**	1790 1720
0.48	55200	3062	190000	0.95				
0.58	45200	2519	190000	1.15				
0.64	40500	2268	190000	1.30				
0.71	36600	2054	190000	1.45				
0.80	32300	1821	190000	1.65				
0.91	28600	1605	190000	1.85				
1.0	24400	1395	190000	2.2				
1.2	21200	1196	190000	2.5				
0.64	39400	2263	150000	0.90	**K167** **KH167**	**R97**	**DRN100L4**	1210 1170
0.67	39400	2182	150000	0.90	**K167** **KH167**	**R97**	**DRN100L4**	1210 1170
0.85	30700	1704	150000	1.15				
1.0	25400	1408	150000	1.40				
1.1	23300	1296	150000	1.50				
1.3	19500	1101	150000	1.80				
1.5	16800	944	150000	2.1				
1.7	14800	843	150000	2.4				
1.9	13400	757	150000	2.6				

P_N = 3.0 kW

n_a min^{-1}	M_a Nm	i	F_{Ra} N	SEW f_B	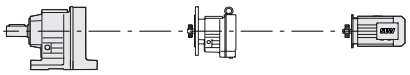			m kg
1.1	24500	1365	108200	0.80				
1.2	22000	1229	109900	0.90				
1.3	19500	1093	111400	1.00	**K157**			810
1.5	16800	942	112700	1.20	**KF157**	**R97**	**DRN100L4**	890
1.7	15200	854	113500	1.30	**KA157**			780
1.9	13200	756	114200	1.50	**KAF157**			830
2.6	10000	567	115300	2.0				
2.9	8930	504	115600	2.2				
2.7	9580	536	80900	1.35				
3.1	8400	473	81300	1.55	**K127**			520
3.5	7550	418	81600	1.70	**KF127**	**R87**	**DRN100L4**	560
4.0	6610	367	81900	1.95	**KA127**			490
4.4	5930	330	82100	2.2	**KAF127**			530
5.1	5090	287	82300	2.6				
1.8	14300	790	77500	0.90				
2.1	12800	704	79300	1.00	**K127**			495
2.4	11000	610	80200	1.20	**KF127**	**R77**	**DRN100L4**	540
2.7	9960	549	80700	1.30	**KA127**			470
3.1	8620	477	81200	1.50	**KAF127**			510
3.5	7590	418	81600	1.70				
3.2	8320	461	65000	0.95				
3.6	7360	408	65000	1.10				
4.0	6600	364	65000	1.20				
4.6	5770	318	65000	1.40	**K107**			335
5.1	5190	286	65000	1.55	**KF107**			350
5.8	4550	251	65000	1.75	**KA107**	**R77**	**DRN100L4**	310
6.6	4010	222	65000	2.0	**KAF107**			335
7.4	3550	196	65000	2.3				
8.4	3170	174	65000	2.3				
9.5	2810	154	65000	2.6				
10	2550	140	65000	2.8				
5.7	4740	258	40000	0.90	**K97**			205
6.3	4270	232	40000	1.00	**KF97**	**R57**	**DRN100L4**	225
7.3	3660	199	40000	1.15	**KA97**			190
					KAF97			215
6.8	4220	143.47*	65000	1.90	**K107**			315
8.0	3570	121.46	65000	2.2	**KF107**	-	**DRN132S6**	330
8.7	3310	112.41*	65000	2.4	**KA107**			290
9.7	2960	100.75	65000	2.7	**KAF107**			315
					K107			300
10	2820	143.47*	65000	2.8	**KF107**	-	**DRN100L4**	310
12	2390	121.46	65000	3.4	**KA107**			270
					KAF107			295
7.9	3650	123.93*	40000	1.20	**K97**			205
9.3	3090	105.13	40000	1.40	**KF97**	-	**DRN132S6**	225
10	2850	96.80	40000	1.50	**KA97**			185
11	2540	86.52	40000	1.70	**KAF97**			210

P_N = 3.0 kW

n_a min^{-1}	M_a Nm	i	F_{Ra} N	SEW f_B	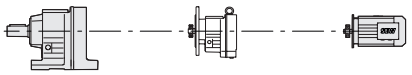			m kg
8.3	3460	176.05*	40000	1.25				
9.5	3010	153.21*	40000	1.45				
10	2760	140.28	40000	1.55				
12	2440	123.93*	40000	1.75				
14	2070	105.13	40000	2.1	**K97**			185
15	1900	96.80	40000	2.3	**KF97**	-	**DRN100L4**	205
17	1700	86.52	40000	2.5	**KA97**			165
19	1530	77.89*	40000	2.8	**KAF97**			190
21	1390	70.54	40000	3.1				
23	1230	62.55	40000	3.5				
26	1110	56.55	40000	3.9				
9.9	2900	147.32*	27000	0.95				
11	2500	126.91*	27500	1.10				
13	2280	115.82	27800	1.20				
14	2020	102.71*	28000	1.35				
17	1700	86.34	28300	1.60	**K87**			125
18	1560	79.34	28400	1.75	**KF87**	-	**DRN100L4**	135
21	1390	70.46	28600	1.95	**KA87**			110
23	1240	63.00*	28600	2.2	**KAF87**			125
26	1110	56.64	28700	2.4				
30	970	49.16	28800	2.8				
33	870	44.02	28900	3.0				
40	720	36.52*	28200	3.5				
16	1750	88.97	13800	0.90				
19	1540	78.07	15500	1.00				
20	1460	73.99	16000	1.05				
22	1270	64.75	17100	1.20	**K77**			88
25	1150	58.34	17700	1.35	**KF77**	-	**DRN100L4**	96
28	1010	51.18	18300	1.55	**KA77**			80
32	890	45.16	18700	1.75	**KAF77**			88
36	790	40.04	19000	1.95				
41	690	35.20	19300	2.2				
47	610	30.89	19500	2.6				
33	870	44.32	9810	0.95				
38	755	38.39	10900	1.05				
41	700	35.62	11300	1.25				
48	595	30.22	11900	1.45				
53	535	27.28	12200	1.55				
61	470	24.00	12500	1.70	**K67**			63
64	445	22.66	12600	1.75	**KF67**	-	**DRN100L4**	69
75	380	19.30	12900	2.0	**KA67**			60
83	345	17.54	13000	2.2	**KAF67**			66
96	300	15.19	13000	2.3				
110	260	13.22	13000	2.6				
117	245	12.48	13000	2.2				
137	210	10.63	13000	2.4				
151	190	9.66	13000	2.5				

P_N = 3.0 kW

n_a min^{-1}	M_a Nm	i	F_{Ra} N	SEW f_B	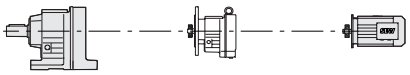			m kg
48	595	30.28	7190	1.05	**K57** **KF57** **KA57** **KAF57**	-	**DRN100L4**	57 62 55 61
53	540	27.34	7190	1.15				
61	475	24.05	7170	1.30				
64	445	22.71	7150	1.35				
75	380	19.34	7060	1.50				
83	345	17.57	6980	1.60				
96	300	15.22	6860	1.80				
110	260	13.25	6710	1.95				
122	235	11.92	6380	1.75				
129	220	11.26	6330	1.85				
152	189	9.59	6160	2.2				
167	171	8.71	6050	2.3				
193	148	7.55	5870	2.5				
222	129	6.57	5700	2.7				
310	92	4.69	5270	3.3				
48	600	30.55*	5690	0.85	**K49** **KF49** **KA49** **KAF49**	-	**DRN100L4**	63 64 60 65
50	570	28.95*	5740	0.90				
57	500	25.34	5820	1.00				
64	450	22.83	5860	1.10				
73	395	20.03	5860	1.25				
82	350	17.67*	5840	1.45				
93	310	15.67	5800	1.60				
109	265	13.38	5710	1.80				
128	225	11.37*	6170	2.2				
140	205	10.42	6050	2.3				
159	180	9.14*	5860	2.8				
168	170	8.66*	5790	2.9				
192	149	7.58	5600	3.4				
213	134	6.83	5460	3.7				
74	385	19.58	4310	1.10	**K47** **KF47** **KA47** **KAF47**	-	**DRN100L4**	51 55 50 53
86	330	16.86	4360	1.25				
92	310	15.86	4370	1.30				
107	270	13.65	4360	1.45				
119	240	12.19	4340	1.55				
124	230	11.77	4230	1.20				
138	210	10.56	4200	1.35				
160	179	9.10	4140	1.55				
170	168	8.56	4110	1.60				
198	145	7.36	4030	1.75				
221	129	6.58	3960	1.85				
250	114	5.81	3880	2.0				
314	91	4.64	3710	2.2				
82	350	17.83	4010	0.85	**K39** **KF39** **KA39** **KAF39**	-	**DRN100L4**	50 52 49 51
94	305	15.44	4090	0.90				
108	265	13.44*	4120	1.00				
137	210	10.61	4720	1.35				
162	177	9.00*	4580	1.70				
179	160	8.12*	4490	1.90				
204	141	7.15*	4380	2.1				
216	133	6.75*	4320	2.3				
253	113	5.75	4170	2.4				
279	103	5.22	4080	2.5				
322	89	4.52	3940	2.7				
370	77	3.94*	3800	2.8				
518	55	2.81*	3480	3.1				

P_N = 3.0 kW

n_a min^{-1}	M_a Nm	i	F_{Ra} N	SEW f_B	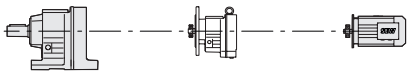			m kg
163	175	8.91	2020	0.90				
183	157	7.96	2050	1.00	**K37**			45
214	134	6.80	2080	1.10	**KF37**	-	**DRN100L4**	47
229	125	6.37	2090	1.15	**KA37**			44
271	106	5.36	2090	1.35	**KAF37**			46
366	78	3.98	2050	1.60				

P_N = 4.0 kW

n_a min^{-1}	M_a Nm	i	F_{Ra} N	SEW f_B	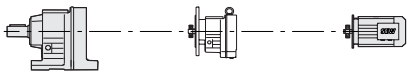			m kg
1.8	19500	835	190000	2.7	**K187**	**R107**	**DRN112M4**	1840
2.8	12200	520	190000	4.3	**KH187**			1780
0.52	65400	2818	190000	0.80	**K187** **KH187**	**R97**	**DRN112M4**	1800 1730
0.58	60300	2519	190000	0.90				
0.65	54100	2268	190000	1.00				
0.71	48900	2054	190000	1.10				
0.80	43200	1821	190000	1.25				
0.91	38200	1605	190000	1.40	**K187** **KH187**	**R97**	**DRN112M4**	1800 1730
1.1	32800	1395	190000	1.60				
1.2	28400	1196	190000	1.85				
1.4	24800	1046	190000	2.1				
1.6	22300	945	190000	2.4				
0.86	40900	1704	150000	0.85				
1.0	33800	1408	150000	1.05				
1.1	31100	1296	150000	1.15				
1.3	26100	1101	150000	1.35	**K167** **KH167**	**R97**	**DRN112M4**	1210 1180
1.6	22500	944	150000	1.55				
1.7	19800	843	150000	1.75				
1.9	17900	757	150000	1.95				
2.3	15000	632	150000	2.3				
1.6	22500	942	109600	0.90				
1.7	20300	854	110900	1.00	**K157**			820
1.9	17800	756	112300	1.15	**KF157**	**R97**	**DRN112M4**	900
2.6	13400	567	114200	1.50	**KA157**			780
2.9	12000	504	114700	1.65	**KAF157**			840
3.4	10200	434	115200	1.95				
2.7	12800	536	79300	1.00				
3.1	11200	473	80100	1.15				
3.5	10100	418	80600	1.30	**K127**			530
4.0	8810	367	81200	1.50	**KF127** **KA127**	**R87**	**DRN112M4**	570 500
4.4	7910	330	81500	1.65	**KAF127**			540
5.1	6800	287	81800	1.90				
5.8	6020	253	82100	2.2				
2.4	14700	610	76600	0.90	**K127**			510
2.7	13200	549	79000	1.00	**KF127**	**R77**	**DRN112M4**	550
3.1	11500	477	80000	1.15	**KA127**			480
3.5	10100	418	80600	1.30	**KAF127**			520

P_N = 4.0 kW

n_a min^{-1}	M_a Nm	i	F_{Ra} N	SEW f_B	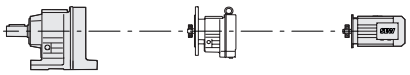			m kg
4.0	8780	364	65000	0.90				
4.6	7670	318	65000	1.05				
5.1	6910	286	65000	1.15				
5.8	6050	251	65000	1.30	**K107**			345
6.6	5330	222	65000	1.50	**KF107**	**R77**	**DRN112M4**	360
7.5	4720	196	65000	1.70	**KA107**			320
8.4	4220	174	65000	1.70	**KAF107**			340
9.5	3740	154	65000	1.95				
10	3390	140	65000	2.1				
6.6	5760	146.07	82100	2.3	**K127**			480
7.1	5370	136.14	82200	2.4	**KF127**	-	**DRN132S6**	520
7.9	4830	122.48	82300	2.7	**KA127**			450
8.8	4350	110.18	82400	3.0	**KAF127**			485
6.8	5660	143.47*	65000	1.40				
8.0	4790	121.46	65000	1.65	**K107**			315
8.6	4440	112.41*	65000	1.80	**KF107**	-	**DRN132S6**	330
9.6	3980	100.75	65000	2.0	**KA107**			290
11	3590	90.96*	65000	2.2	**KAF107**			315
10	3740	143.47*	65000	2.1				
12	3170	121.46	65000	2.5				
13	2930	112.41*	65000	2.7	**K107**			305
15	2630	100.75	65000	3.0	**KF107**	-	**DRN112M4**	320
16	2370	90.96*	65000	3.4	**KA107**			280
18	2160	82.61	65000	3.7	**KAF107**			305
20	1910	73.30	65000	4.2				
9.6	4000	153.21*	40000	1.10				
10	3660	140.28	40000	1.15				
12	3230	123.93*	40000	1.35	**K97**			190
14	2740	105.13	40000	1.55	**KF97**	-	**DRN112M4**	210
15	2530	96.80	40000	1.70	**KA97**			175
17	2260	86.52	40000	1.90	**KAF97**			200
19	2030	77.89*	40000	2.1				
21	1840	70.54	40000	2.3				
13	3020	115.82	26900	0.90				
14	2680	102.71*	27300	1.00				
17	2250	86.34	27800	1.20				
18	2070	79.34	28000	1.30	**K87**			135
21	1840	70.46	28200	1.45	**KF87**	-	**DRN112M4**	140
23	1640	63.00*	28400	1.65	**KA87**			120
26	1480	56.64	28500	1.85	**KAF87**			135
30	1280	49.16	28600	2.1				
33	1150	44.02	28200	2.3				
40	950	36.52*	27200	2.6				
23	1690	64.75	14300	0.90				
25	1520	58.34	15600	1.00				
29	1340	51.18	16700	1.15				
32	1180	45.16	17500	1.30				
37	1040	40.04	18100	1.50	**K77**			97
38	1000	38.39	18300	1.50	**KF77**	-	**DRN112M4**	105
42	920	35.20	18600	1.70	**KA77**			90
47	810	30.89	19000	1.90	**KAF77**			98
50	765	29.27	19100	2.0				
57	670	25.62	19300	2.3				
63	600	23.08	19500	2.6				
72	530	20.25	19600	2.8				

P_N = 4.0 kW

n_a min^{-1}	M_a Nm	i	F_{Ra} N	SEW f_B	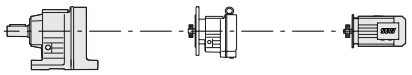			m kg
48	790	30.22	10600	1.10				
54	710	27.28	11200	1.15				
61	625	24.00	11700	1.30				
65	590	22.66	11900	1.30				
76	505	19.30	12400	1.50				
84	455	17.54	12600	1.60	**K67**			72
96	395	15.19	12800	1.75	**KF67**			78
111	345	13.22	13000	1.95	**KA67**	-	**DRN112M4**	70
117	325	12.48	13000	1.65	**KAF67**			76
138	275	10.63	13000	1.80				
152	250	9.66	12800	1.90				
175	220	8.37	12400	2.0				
201	190	7.28	12000	2.2				
282	136	5.20	11100	2.6				
61	630	24.05	6140	1.00				
64	595	22.71	6180	1.00				
76	505	19.34	6230	1.15				
83	460	17.57	6230	1.20				
96	395	15.22	6200	1.35				
111	345	13.25	6140	1.50	**K57**			67
123	310	11.92	5800	1.35	**KF57**			71
130	295	11.26	5780	1.40	**KA57**	-	**DRN112M4**	65
153	250	9.59	5680	1.60	**KAF57**			70
168	225	8.71	5620	1.70				
194	197	7.55	5500	1.85				
223	171	6.57	5380	2.0				
312	122	4.69	5030	2.5				
64	595	22.83	4780	0.85				
73	525	20.03	4920	0.95				
83	460	17.67*	5010	1.10				
93	410	15.67	5060	1.20				
109	350	13.38	5080	1.35				
129	295	11.37*	5810	1.65	**K49**			72
141	270	10.42	5720	1.75	**KF49**			73
160	240	9.14*	5580	2.1	**KA49**	-	**DRN112M4**	69
169	225	8.66*	5520	2.2	**KAF49**			74
193	198	7.58	5360	2.5				
214	178	6.83	5240	2.8				
244	156	5.99	5080	3.2				
277	138	5.29*	4930	3.5				
312	122	4.69*	4790	3.8				
163	235	9.00*	4240	1.30				
180	210	8.12*	4180	1.40				
205	187	7.15*	4100	1.60				
217	176	6.75*	4070	1.70	**K39**			60
255	150	5.75	3950	1.85	**KF39**			61
280	136	5.22	3880	1.90	**KA39**	-	**DRN112M4**	59
324	118	4.52	3770	2.0	**KAF39**			60
372	103	3.94*	3650	2.1				
521	73	2.81*	3370	2.3				

P_N = 5.5 kW

n_a min^{-1}	M_a Nm	i	F_{Ra} N	SEW f_B	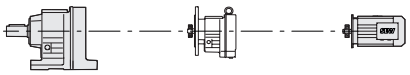			m kg
0.80	59900	1821	190000	0.90				
0.91	53000	1605	190000	1.00				
1.1	45600	1395	190000	1.15				
1.2	39400	1196	190000	1.35	**K187**	**R97**	**DRN132S4**	1810
1.4	34400	1046	190000	1.55	**KH187**			1740
1.6	31000	945	190000	1.70				
2.0	24300	738	190000	2.2				
2.4	20400	621	190000	2.6				
1.1	43000	1296	150000	0.80				
1.3	36200	1101	150000	0.95				
1.6	31200	944	150000	1.10				
1.7	27600	843	150000	1.25	**K167**			1230
1.9	24900	757	150000	1.40	**KH167**	**R97**	**DRN132S4**	1190
2.3	20800	632	150000	1.70				
2.6	18200	561	150000	1.90				
3.0	15800	481	150000	2.2				
3.5	13800	423	150000	2.5				
1.9	24700	756	108100	0.80				
2.2	21500	661	110200	0.95	**K157**			830
2.6	18600	567	111800	1.05	**KF157**			910
2.9	16600	504	112900	1.20	**KA157**	**R97**	**DRN132S4**	800
3.4	14200	434	113900	1.40	**KAF157**			850
3.9	12300	379	114600	1.60				
4.4	10900	333	115000	1.85				
3.5	14000	418	78000	0.95				
4.0	12200	367	79600	1.05				
4.4	10900	330	80300	1.20	**K127**			540
5.1	9440	287	80900	1.40	**KF127**			580
5.8	8350	253	81300	1.55	**KA127**	**R87**	**DRN132S4**	510
6.9	7020	213	81800	1.85	**KAF127**			550
7.3	6690	200	81900	1.80				
8.8	5530	166	82200	2.2				
10	4880	147	82300	2.5				
6.6	7370	222	65000	1.10				
7.4	6530	196	65000	1.20	**K107**			355
8.4	5840	174	65000	1.25	**KF107**			370
9.5	5170	154	65000	1.40	**KA107**	**R77**	**DRN132S4**	330
10	4690	140	65000	1.55	**KAF107**			355
7.2	7330	136.14	81700	1.75	**K127**			500
8.0	6600	122.48	81900	1.95	**KF127**			540
8.9	5940	110.18	82100	2.2	**KA127**	**-**	**DRN132L6**	470
11	4840	89.89	82300	2.7	**KAF127**			510
8.7	6060	112.41*	65000	1.30	**K107**			345
9.7	5430	100.75	65000	1.45	**KF107**			355
11	4900	90.96*	65000	1.65	**KA107**	**-**	**DRN132L6**	315
12	4450	82.61	65000	1.80	**KAF107**			340
10	5160	143.47*	65000	1.55				
12	4370	121.46	65000	1.85	**K107**			315
13	4040	112.41*	65000	2.0	**KF107**			330
15	3620	100.75	65000	2.2	**KA107**	**-**	**DRN132S4**	290
16	3270	90.96*	65000	2.5	**KAF107**			315
18	2970	82.61	65000	2.7				

P_N = 5.5 kW

n_a min^{-1}	M_a Nm	i	F_{Ra} N	SEW f_B	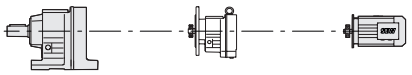			m kg
12	4460	123.93*	40000	0.95				
14	3780	105.13	40000	1.15				
15	3480	96.80	40000	1.25				
17	3110	86.52	40000	1.40	**K97**			205
19	2800	77.89*	40000	1.55	**KF97**	-	**DRN132S4**	225
21	2540	70.54	40000	1.70	**KA97**			185
23	2250	62.55	40000	1.90	**KAF97**			210
26	2030	56.55	39600	2.1				
30	1720	47.93*	38400	2.5				
17	3100	86.34	26700	0.85				
18	2850	79.34	27100	0.95				
21	2530	70.46	27500	1.05				
23	2260	63.00*	27400	1.20	**K87**			145
26	2040	56.64	27200	1.35	**KF87**	-	**DRN132S4**	155
30	1770	49.16	26800	1.55	**KA87**			130
33	1580	44.02	26400	1.65	**KAF87**			145
40	1310	36.52*	25700	1.90				
47	1130	31.39	25100	2.4				
52	1000	27.88	24600	2.6				
32	1620	45.16	14800	0.95				
36	1440	40.04	16100	1.10				
47	1110	30.89	17900	1.40				
50	1050	29.27	18100	1.45				
57	920	25.62	18600	1.70	**K77**			110
63	830	23.08	18900	1.85	**KF77**	-	**DRN132S4**	115
72	730	20.25	19200	2.1	**KA77**			100
82	640	17.87	19400	2.3	**KAF77**			110
92	570	15.84	19100	2.5				
108	485	13.52	18500	2.8				
118	445	12.36	17800	2.3				
135	390	10.84	17400	2.5				
61	860	24.00	9910	0.95				
64	810	22.66	10400	0.95				
76	695	19.30	11300	1.10				
83	630	17.54	11700	1.15				
96	545	15.19	12200	1.30	**K67**			84
111	475	13.22	12500	1.40	**KF67**	-	**DRN132S4**	90
117	450	12.48	12600	1.20	**KA67**			81
137	380	10.63	12400	1.30	**KAF67**			87
151	345	9.66	12200	1.40				
175	300	8.37	11900	1.45				
201	260	7.28	11600	1.60				
281	187	5.20	10800	1.85				
93	565	15.67	3950	0.85				
109	480	13.38	4130	1.00				
160	330	9.14*	5170	1.50				
169	310	8.66*	5130	1.60	**K49**			83
193	275	7.58	5020	1.85	**KF49**	-	**DRN132S4**	85
214	245	6.83	4930	2.0	**KA49**			80
244	215	5.99	4810	2.3	**KAF49**			85
276	190	5.29*	4690	2.6				
312	169	4.69*	4570	2.8				
365	144	4.00	4410	3.1				

P_N = 7.5 kW

n_a min^{-1}	M_a Nm	i	F_{Ra} N	SEW f_B	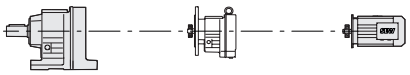			m kg
1.8	37200	835	190000	1.45	**K187 KH187**	**R107**	**DRN132M4**	1870
2.0	32300	729	190000	1.65				1810
2.4	27500	622	190000	1.95				
1.1	62400	1395	190000	0.85	**K187 KH187**	**R97**	**DRN132M4**	1830
1.2	53700	1196	190000	1.00				1760
1.4	46900	1046	190000	1.15				
1.6	42400	945	190000	1.25				
2.0	33100	738	190000	1.60				
2.4	27800	621	190000	1.90				
2.8	23500	527	190000	2.3				
1.6	42500	944	150000	0.80	**K167 KH167**	**R97**	**DRN132M4**	1240
1.7	37700	843	150000	0.95				1210
1.9	33900	757	150000	1.05				
2.3	28400	632	150000	1.25				
2.6	25000	561	150000	1.40				
3.1	21600	481	150000	1.60				
3.5	18800	423	150000	1.85				
4.0	16500	369	150000	2.1				
2.9	22600	504	109500	0.90	**K157 KF157 KA157 KAF157**	**R97**	**DRN132M4**	850
3.4	19400	434	111400	1.05				930
3.9	16900	379	112700	1.20				810
4.4	14900	333	113600	1.35				870
5.1	13000	291	114400	1.55				
4.4	14900	330	76200	0.85	**K127 KF127 KA127 KAF127**	**R87**	**DRN132M4**	560
5.1	12900	287	79300	1.00				600
5.8	11400	253	80000	1.15				530
6.9	9570	213	80900	1.35				560
7.3	9110	200	81000	1.30				
8.8	7550	166	81600	1.60				
10	6660	147	81900	1.80				
6.0	12000	164.50	150000	2.8	**K167 KH167**	**-**	**DRN160M6**	1160
7.3	9870	134.99	150000	3.5				1120
6.5	11000	150.41	115000	1.80	**K157 KF157 KA157 KAF157**	**-**	**DRN160M6**	760
8.0	8950	122.39	115600	2.2				840
9.8	7330	100.22	115900	2.7				730
11	6710	91.65	116000	3.0				780
12	5830	79.75	116200	3.4				
7.2	9960	136.14	80700	1.30	**K127 KF127 KA127 KAF127**	**-**	**DRN160M6**	530
8.0	8960	122.48	81100	1.45				570
8.9	8060	110.18	81400	1.60				500
11	6580	89.89	81900	2.0				540
10	7130	146.07	81700	1.80	**K127 KF127 KA127 KAF127**	**-**	**DRN132M4**	490
11	6640	136.14	81900	1.95				530
12	5980	122.48	82100	2.2				460
13	5380	110.18	82200	2.4				500
16	4390	89.89	82400	3.0				
18	4000	81.98	82500	3.3				
21	3460	70.95*	82600	3.8				

P_N = 7.5 kW

n_a min^{-1}	M_a Nm	i	F_{Ra} N	SEW f_B	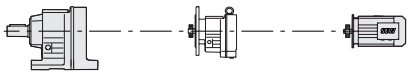			m kg
10	7000	143.47*	65000	1.15				
12	5930	121.46	65000	1.35				
13	5480	112.41*	65000	1.45				
15	4920	100.75	65000	1.65				
16	4440	90.96*	64000	1.80	**K107**			335
18	4030	82.61	63000	2.0	**KF107**	-	**DRN132M4**	350
20	3580	73.30	61700	2.2	**KA107**			310
22	3250	66.52*	60600	2.5	**KAF107**			330
26	2790	57.17*	58800	2.9				
29	2430	49.90	57100	3.2				
35	2070	42.33*	55100	3.6				
40	1800	37.00*	53500	4.0				
15	4720	96.80	38400	0.90				
17	4220	86.52	38300	1.00				
19	3800	77.89*	38100	1.15				
21	3440	70.54	37800	1.25	**K97**			220
23	3050	62.55	37400	1.40	**KF97**	-	**DRN132M4**	240
26	2760	56.55	37000	1.55	**KA97**			205
31	2340	47.93*	36200	1.85	**KAF97**			230
35	2040	41.87	35500	2.1				
38	1870	38.30	35000	2.3				
43	1670	34.23	34300	2.6				
23	3070	63.00*	24100	0.90				
26	2760	56.64	24200	1.00				
30	2400	49.16	24200	1.15				
33	2150	44.02	24100	1.20				
40	1780	36.52*	23800	1.40				
47	1530	31.39	23400	1.75	**K87**			160
53	1360	27.88	23100	1.90	**KF87**	-	**DRN132M4**	170
59	1220	24.92	22700	2.1	**KA87**			150
66	1090	22.41	22400	2.1	**KAF87**			165
75	950	19.45	21800	2.4				
84	850	17.42	21400	2.6				
92	780	16.00	20500	2.3				
102	705	14.45	20600	3.0				
48	1510	30.89	15700	1.05				
50	1430	29.27	16200	1.10				
57	1250	25.62	17200	1.25				
64	1130	23.08	17800	1.40				
73	990	20.25	18400	1.50				
82	870	17.87	18500	1.65	**K77**			125
93	775	15.84	18200	1.80	**KF77**	-	**DRN132M4**	135
109	660	13.52	17700	2.0	**KA77**			120
119	605	12.36	17000	1.65	**KAF77**			125
135	530	10.84	16600	1.85				
154	465	9.56	16200	2.0				
173	415	8.48	15800	2.2				
203	355	7.24	15300	2.3				
161	445	9.14*	4610	1.10				
169	425	8.66*	4600	1.20				
194	370	7.58	4560	1.35	**K49**			100
215	335	6.83	4510	1.50	**KF49**	-	**DRN132M4**	105
245	290	5.99	4450	1.70	**KA49**			98
278	260	5.29*	4370	1.90	**KAF49**			105
313	230	4.69*	4290	2.0				
367	195	4.00	4170	2.3				

P_N = 9.2 kW

n_a min^{-1}	M_a Nm	i	F_{Ra} N	SEW f_B	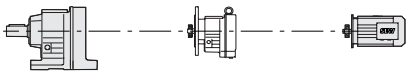			m kg
1.8	45700	835	190000	1.15	**K187 KH187**	**R107**	**DRN132L4**	1880
2.0	39800	729	190000	1.35				1810
2.4	33900	622	190000	1.55				
2.8	28800	520	190000	1.85				
3.2	25000	454	190000	2.1				
4.6	17600	318	150000	2.0	**K167 KH167**	**R107**	**DRN132L4**	1300
5.3	15300	278	150000	2.3				1260
6.0	13200	244	150000	2.6				
6.9	11500	213	150000	3.0				
7.1	11200	206	150000	3.1				
3.8	20800	385	110600	0.95	**K157 KF157 KA157 KAF157**	**R107**	**DRN132L4**	910
4.5	17500	325	112400	1.15				980
4.9	16300	299	113000	1.25				870
5.8	13800	253	114100	1.45				930
6.4	12400	230	114600	1.60				
1.2	66000	1196	190000	0.80	**K187 KH187**	**R97**	**DRN132L4**	1830
1.4	57700	1046	190000	0.90				1770
1.6	52100	945	190000	1.00				
2.0	40700	738	190000	1.30				
2.4	34200	621	190000	1.55				
2.8	28900	527	190000	1.85				
1.9	41700	757	150000	0.85	**K167 KH167**	**R97**	**DRN132L4**	1250
2.3	34900	632	150000	1.00				1210
2.6	30700	561	150000	1.15				
3.1	26500	481	150000	1.30				
3.5	23200	423	150000	1.50				
4.0	20200	369	150000	1.75				
3.4	23800	434	108700	0.85	**K157 KF157 KA157 KAF157**	**R97**	**DRN132L4**	860
3.9	20800	379	110700	0.95				940
4.4	18300	333	112000	1.10				820
5.1	15900	291	113200	1.25				880
5.8	14000	253	78000	0.95	**K127 KF127 KA127 KAF127**	**R87**	**DRN132L4**	560
6.9	11800	213	79900	1.10				610
7.3	11200	200	80100	1.05				540
8.8	9270	166	81000	1.30				570
10	8180	147	81400	1.45				
11	8140	136.14	81400	1.60	**K127 KF127 KA127 KAF127**	**-**	**DRN132L4**	500
12	7320	122.48	81700	1.80				540
13	6580	110.18	81900	1.95				470
16	5370	89.89	82200	2.4				510
18	4900	81.98	82300	2.7				
13	6720	112.41*	62300	1.20	**K107 KF107 KA107 KAF107**	**-**	**DRN132L4**	345
15	6020	100.75	61700	1.35				355
16	5440	90.96*	61000	1.45				315
18	4940	82.61	60300	1.60				340
20	4380	73.30	59300	1.85				
22	3980	66.52*	58400	2.0				
26	3420	57.17*	56900	2.3				
29	2980	49.90	55500	2.6				
35	2530	42.33*	53700	2.9				

P_N = 9.2 kW

n_a min^{-1}	M_a Nm	i	F_{Ra} N	SEW f_B	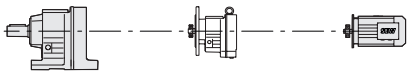			m kg
19	4660	77.89*	35100	0.90	**K97** **KF97** **KA97** **KAF97**	-	**DRN132L4**	230
21	4220	70.54	35100	1.00				250
24	3740	62.55	35000	1.15				210
26	3380	56.55	34800	1.25				235
31	2860	47.93*	34400	1.50				
35	2500	41.87	33900	1.70				
38	2290	38.30	33500	1.90				
43	2050	34.23	33000	2.1				
48	1840	30.82	32400	2.3				
53	1670	27.91	31900	2.6				
59	1480	24.75	31200	2.9				
30	2940	49.16	22000	0.90	**K87** **KF87** **KA87** **KAF87**	-	**DRN132L4**	170
33	2630	44.02	22200	1.00				180
40	2180	36.52*	22200	1.15				160
47	1880	31.39	22000	1.45				170
53	1670	27.88	21900	1.55				
59	1490	24.92	21600	1.70				
66	1340	22.41	21400	1.70				
76	1160	19.45	21000	2.0				
84	1040	17.42	20600	2.1				
92	960	16.00	19700	1.90				
102	860	14.45	20000	2.4				
117	750	12.56	19500	2.7				
132	665	11.17	18500	2.3				
147	595	10.00	18200	2.5				
64	1380	23.08	16500	1.10	**K77** **KF77** **KA77** **KAF77**	-	**DRN132L4**	135
73	1210	20.25	17400	1.25				145
82	1070	17.87	17600	1.35				125
93	950	15.84	17300	1.50				135
109	810	13.52	17000	1.65				
119	740	12.36	16200	1.35				
136	650	10.84	15900	1.55				
154	570	9.56	15600	1.65				
173	505	8.48	15300	1.75				
203	435	7.24	14900	1.90				

P_N = 11.0 kW

n_a min^{-1}	M_a Nm	i	F_{Ra} N	SEW f_B	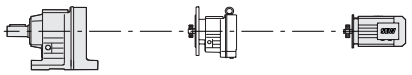			m kg
1.8	54700	835	190000	0.95	**K187** **KH187**	**R107**	**DRN160M4**	1910
2.0	47600	729	190000	1.10				1850
2.4	40600	622	190000	1.30				
2.8	34400	520	190000	1.55				
3.3	30000	454	190000	1.75				
4.1	23100	355	190000	2.3				
4.6	21000	318	150000	1.65	**K167** **KH167**	**R107**	**DRN160M4**	1330
5.3	18300	278	150000	1.90				1290
6.0	15900	244	150000	2.2				
6.9	13800	213	150000	2.5				
7.2	13500	206	150000	2.6				
4.5	21000	325	110500	0.95	**K157** **KF157** **KA157** **KAF157**	**R107**	**DRN160M4**	940 1020 900 960

P_N = 11.0 kW

n_a min^{-1}	M_a Nm	i	F_{Ra} N	SEW f_B	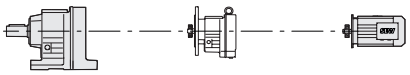			m kg
1.6	62300	945	190000	0.85				
2.0	48700	738	190000	1.10	**K187**	**R97**	**DRN160M4**	1870
2.4	40900	621	190000	1.30	**KH187**			1800
2.8	34600	527	190000	1.55				
2.3	41700	632	150000	0.85				
2.6	36700	561	150000	0.95	**K167**			
3.1	31700	481	150000	1.10	**KH167**	**R97**	**DRN160M4**	1290
3.5	27700	423	150000	1.25				1250
4.0	24200	369	150000	1.45				
					K157			890
3.9	24900	379	108000	0.80	**KF157**			
4.4	21900	333	110000	0.90	**KA157**	**R97**	**DRN160M4**	970
5.1	19100	291	111600	1.05	**KAF157**			850
								910
6.9	14100	213	77900	0.95	**K127**			600
7.4	13400	200	79000	0.90	**KF127**	**R87**	**DRN160M4**	640
8.9	11100	166	80200	1.10	**KA127**			570
10	9770	147	80800	1.25	**KAF127**			610
9.0	11700	164.50	150000	2.9	**K167**			1160
11	9630	134.99	150000	3.6	**KH167**	**-**	**DRN160M4**	1120
9.8	10700	150.41	115100	1.85	**K157**			760
12	8730	122.39	115600	2.3	**KF157**			840
15	7150	100.22	115900	2.8	**KA157**	**-**	**DRN160M4**	730
16	6540	91.65	116100	3.1	**KAF157**			780
11	9710	136.14	80800	1.35				
12	8730	122.48	81200	1.50	**K127**			530
13	7860	110.18	81500	1.65	**KF127**			570
16	6410	89.89	82000	2.0	**KA127**	**-**	**DRN160M4**	500
18	5850	81.98	82100	2.2	**KAF127**			540
21	5060	70.95*	82300	2.6				
13	8020	112.41*	57800	1.00				
15	7180	100.75	58200	1.10				
16	6490	90.96*	57900	1.25				
18	5890	82.61	57400	1.35	**K107**			375
20	5230	73.30	56700	1.55	**KF107**			390
22	4740	66.52*	56100	1.70	**KA107**	**-**	**DRN160M4**	350
26	4080	57.17*	54900	1.95	**KAF107**			375
30	3560	49.90	53800	2.2				
35	3020	42.33*	52300	2.4				
40	2640	37.00*	51000	2.7				
21	5030	70.54	32300	0.85				
24	4460	62.55	32500	0.95				
26	4030	56.55	32500	1.05				
31	3420	47.93*	32400	1.25	**K97**			265
35	2990	41.87	32200	1.45	**KF97**			285
38	2730	38.30	31900	1.55	**KA97**	**-**	**DRN160M4**	245
43	2440	34.23	31600	1.75	**KAF97**			270
48	2200	30.82	31200	1.95				
53	1990	27.91	30700	2.2				
60	1760	24.75	30200	2.4				
66	1600	22.37	29700	2.7				

P_N = 11.0 kW

n_a min^{-1}	M_a Nm	i	F_{Ra} N	SEW f_B	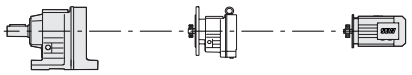			m kg
33	3140	44.02	20100	0.85				
40	2600	36.52*	20500	0.95				
47	2240	31.39	20600	1.20				
53	1990	27.88	20500	1.30				
59	1780	24.92	20400	1.40				
66	1600	22.41	20300	1.45				
76	1390	19.45	20000	1.65	**K87**			205
85	1240	17.42	19800	1.75	**KF87**	-	**DRN160M4**	210
92	1140	16.00	18800	1.60	**KA87**			190
102	1030	14.45	19300	2.0	**KAF87**			205
117	900	12.56	18900	2.2				
132	795	11.17	17900	1.90				
147	715	10.00	17600	2.1				
178	590	8.29	17000	2.4				
204	515	7.21	16600	2.5				
64	1650	23.08	14700	0.95				
73	1440	20.25	16100	1.05				
82	1270	17.87	16600	1.15				
93	1130	15.84	16500	1.25	**K77**			165
109	960	13.52	16200	1.40	**KF77**	-	**DRN160M4**	175
119	880	12.36	15500	1.15	**KA77**			160
136	775	10.84	15300	1.30	**KAF77**			165
154	680	9.56	15000	1.40				
174	605	8.48	14800	1.45				
203	515	7.24	14400	1.60				

P_N = 15.0 kW

n_a min^{-1}	M_a Nm	i	F_{Ra} N	SEW f_B	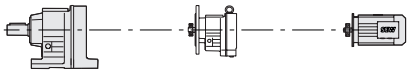			m kg
2.0	65200	729	190000	0.80				
2.4	55600	622	190000	0.95				
2.8	47100	520	190000	1.15	**K187**	**R107**	**DRN160L4**	1930
3.3	41000	454	190000	1.30	**KH187**			1860
4.2	31700	355	190000	1.65				
5.7	23600	261	190000	2.3				
4.6	28800	318	150000	1.20				
5.3	25100	278	150000	1.40				
6.0	21800	244	150000	1.60				
6.9	19000	213	150000	1.85	**K167**	**R107**	**DRN160L4**	1350
7.2	18500	206	150000	1.90	**KH167**			1310
8.2	16000	180	150000	2.2				
9.2	14400	160	150000	2.4				
5.8	22600	253	109500	0.90				
6.4	20400	230	110900	1.00				
6.9	19200	213	111600	1.05	**K157**			950
7.9	16600	187	112900	1.20	**KF157**	**R107**	**DRN160L4**	1030
9.4	14100	157	113900	1.40	**KA157**			920
12	11000	122	115000	1.80	**KAF157**			980
14	9610	107	115400	2.1				
2.0	66500	738	190000	0.80	**K187**	**R97**	**DRN160L4**	1880
2.4	55900	621	190000	0.95	**KH187**			1820
3.1	43300	481	150000	0.80	**K167**	**R97**	**DRN160L4**	1300
3.5	38000	423	150000	0.90	**KH167**			1260
9.0	16000	164.50	150000	2.1	**K167**	-	**DRN160L4**	1170
11	13100	134.99	150000	2.7	**KH167**			1130

P_N = 15.0 kW

n_a min^{-1}	M_a Nm	i	F_{Ra} N	SEW f_B	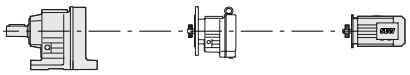			m kg
9.8	14600	150.41	113700	1.35	**K157** **KF157** **KA157** **KAF157**	-	**DRN160L4**	780
12	11900	122.39	114700	1.70				860
15	9740	100.22	114000	2.1				740
16	8910	91.65	112300	2.3				800
18	7750	79.75	109400	2.6				
11	13200	136.14	79100	1.00	**K127** **KF127** **KA127** **KAF127**	-	**DRN160L4**	550
12	11900	122.48	79800	1.10				
13	10700	110.18	80400	1.20				
16	8740	89.89	81200	1.50				590
18	7970	81.98	81500	1.65				520
21	6890	70.95*	81500	1.90				560
24	6080	62.60	79800	2.1				
27	5250	54.07	77800	2.5				
31	4650	47.82	76100	2.8				
16	8840	90.96*	48300	0.90	**K107** **KF107** **KA107** **KAF107**	-	**DRN160L4**	395
18	8030	82.61	49500	1.00				
20	7120	73.30	50500	1.10				
22	6460	66.52*	51000	1.25				405
26	5560	57.17*	50600	1.45				365
30	4850	49.90	50000	1.60				390
35	4110	42.33*	49000	1.80				
40	3600	37.00*	48100	2.0				
45	3180	32.69	47200	2.3				
47	3040	31.28*	46900	2.2				
51	2820	29.00	46300	2.6				
31	4660	47.93*	28100	0.90	**K97** **KF97** **KA97** **KAF97**	-	**DRN160L4**	280
35	4070	41.87	28400	1.05				
39	3720	38.30	28500	1.15				
43	3330	34.23	28500	1.30				300
48	2990	30.82	28400	1.45				260
53	2710	27.91	28200	1.60				285
60	2400	24.75	28000	1.80				
66	2170	22.37	27700	2.0				
78	1840	18.96	27100	2.3				
89	1610	16.56	26600	2.7				
47	3050	31.39	17300	0.90	**K87** **KF87** **KA87** **KAF87**	-	**DRN160L4**	220
53	2710	27.88	17600	0.95				
59	2420	24.92	17900	1.05				
66	2180	22.41	18000	1.05				230
76	1890	19.45	18000	1.20				205
85	1690	17.42	18000	1.30				220
92	1550	16.00	16800	1.15				
102	1400	14.45	17800	1.50				
117	1220	12.56	17600	1.65				
132	1080	11.17	16600	1.40				
147	970	10.00	16400	1.55				
178	810	8.29	16000	1.75				
204	700	7.21	15700	1.85				

P_N = 18.5 kW

n_a min^{-1}	M_a Nm	i	F_{Ra} N	SEW f_B	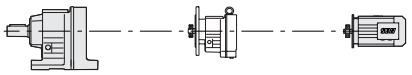			m kg
2.8	58100	520	190000	0.90	**K187 KH187**	**R107**	**DRN180M4**	1950 1880
3.3	50600	454	190000	1.05				
4.2	39100	355	190000	1.35				
5.7	29100	261	190000	1.80				
6.7	24600	221	190000	2.2				
4.7	35500	318	150000	1.00	**K167 KH167**	**R107**	**DRN180M4**	1370 1330
5.3	30900	278	150000	1.15				
6.1	26900	244	150000	1.30				
6.9	23400	213	150000	1.50				
7.2	22800	206	150000	1.55				
8.2	19700	180	150000	1.75				
9.3	17800	160	150000	1.95				
11	15100	135	150000	2.3				
12	13100	118	150000	2.7				
6.9	23700	213	108800	0.85	**K157 KF157 KA157 KAF157**	**R107**	**DRN180M4**	980 1050 940 1000
7.9	20500	187	110800	1.00				
9.4	17400	157	112500	1.15				
12	13600	122	113800	1.45				
14	11900	107	111900	1.70				
2.8	58300	527	190000	0.90	**K187 KH187**	**R97**	**DRN180M4**	1900 1840
4.0	40800	369	150000	0.85	**K167 KH167**	**R97**	**DRN180M4**	1320 1280
8.2	21500	179.86	190000	2.5	**K187 KH187**	**-**	**DRN180M4**	1780 1710
9.0	19700	165.21	190000	2.7				
10	17300	144.59	190000	3.1				
11	15500	129.69	190000	3.4				
11	16100	134.99	150000	2.2	**K167 KH167**	**-**	**DRN180M4**	1200 1160
13	13100	109.83	150000	2.7				
17	10500	87.86	150000	3.3				
12	14600	122.39	111600	1.35	**K157 KF157 KA157 KAF157**	**-**	**DRN180M4**	800 880 770 820
15	12000	100.22	109000	1.65				
16	11000	91.65	107700	1.85				
19	9530	79.75	105400	2.1				
21	8410	70.38	103200	2.4				
24	7290	61.02	100600	2.7				
27	6490	54.29	98300	3.1				
32	5590	46.79	95400	3.6				
39	4540	38.02	91200	4.4				
13	13200	110.18	79100	1.00	**K127 KF127 KA127 KAF127**	**-**	**DRN180M4**	570 610 540 580
16	10700	89.89	79000	1.20				
18	9800	81.98	78500	1.35				
21	8480	70.95*	77400	1.55				
24	7480	62.60	76300	1.75				
27	6460	54.07	74700	2.0				
31	5720	47.82	73300	2.3				
37	4800	40.19	71100	2.7				
41	4330	36.25	69800	3.0				
47	3750	31.37	67800	3.5				
53	3310	27.68	66100	3.9				

P_N = 18.5 kW

n_a min^{-1}	M_a Nm	i	F_{Ra} N	SEW f_B	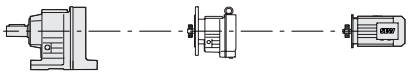			m kg
20	8760	73.30	42900	0.90	**K107** **KF107** **KA107** **KAF107**	-	**DRN180M4**	415
22	7950	66.52*	44300	1.00				425
26	6830	57.17*	45800	1.15				385
30	5960	49.90	46600	1.30				410
35	5060	42.33*	46200	1.45				
40	4420	37.00*	45700	1.65				
45	3910	32.69	45000	1.85				
47	3740	31.28*	44800	1.80				
51	3470	29.00	44300	2.1				
56	3140	26.32	43700	2.3				
65	2700	22.62	42700	2.7				
75	2360	19.74	41700	3.1				
88	2000	16.75	40400	3.5				
35	5000	41.87	25100	0.85	**K97** **KF97** **KA97** **KAF97**	-	**DRN180M4**	300
48	3680	30.82	26000	1.15				320
53	3330	27.91	26000	1.30				280
60	2960	24.75	26000	1.45				305
66	2670	22.37	25900	1.60				
78	2270	18.96	25600	1.90				
89	1980	16.56	25300	2.2				
107	1660	13.85	24700	2.6				
123	1430	11.99	24200	2.7				
59	2980	24.92	15600	0.85	**K87** **KF87** **KA87** **KAF87**	-	**DRN180M4**	240
66	2680	22.41	15900	0.85				250
76	2320	19.45	16200	1.00				230
85	2080	17.42	16400	1.05				240
102	1730	14.45	16500	1.20				
118	1500	12.56	16400	1.35				
132	1330	11.17	15400	1.10				
148	1190	10.00	15300	1.25				
178	990	8.29	15100	1.40				
205	860	7.21	14900	1.50				

P_N = 22 kW

n_a min^{-1}	M_a Nm	i	F_{Ra} N	SEW f_B	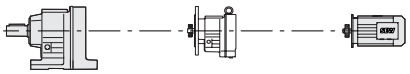			m kg
3.3	60300	454	190000	0.90	**K187** **KH187**	**R107**	**DRN180L4**	1970
4.2	46700	355	190000	1.15				1900
5.7	34700	261	190000	1.55				
6.7	29400	221	190000	1.80				
7.6	25600	193	190000	2.1				
9.0	21600	163	190000	2.5				
4.6	42300	318	150000	0.85	**K167** **KH167**	**R107**	**DRN180L4**	1380
5.3	36900	278	150000	0.95				1350
6.1	32000	244	150000	1.10				
6.9	27900	213	150000	1.25				
7.2	27200	206	150000	1.30				
8.2	23600	180	150000	1.50				
9.3	21200	160	150000	1.65				
11	18000	135	150000	1.95				
12	15700	118	150000	2.2				
7.9	24500	187	108300	0.80	**K157** **KF157** **KA157** **KAF157**	**R107**	**DRN180L4**	990
9.4	20800	157	109400	0.95				1070
12	16200	122	108100	1.25				950
14	14200	107	106900	1.40				1010

P_N = 22 kW

n_a min^{-1}	M_a Nm	i	F_{Ra} N	SEW f_B	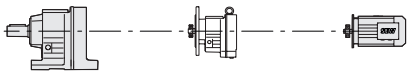			m kg
8.2	25600	179.86	190000	2.1				
8.9	23500	165.21	190000	2.3	**K187**	-	**DRN180L4**	1790
10	20600	144.59	190000	2.6	**KH187**			1730
11	18400	129.69	190000	2.9				
11	19200	134.99	150000	1.80				
13	15600	109.83	150000	2.2	**K167**	-	**DRN180L4**	1210
17	12500	87.86	150000	2.8	**KH167**			1170
19	11100	78.14	150000	3.2				
12	17400	122.39	105500	1.15				
15	14300	100.22	104000	1.40				
16	13000	91.65	103100	1.55	**K157**			820
19	11300	79.75	101500	1.75	**KF157**			900
21	10000	70.38	99700	2.0	**KA157**	-	**DRN180L4**	780
24	8680	61.02	97600	2.3	**KAF157**			840
27	7720	54.29	95600	2.6				
32	6660	46.79	93100	3.0				
39	5410	38.02	89300	3.7				
16	12800	89.89	73900	1.00				
18	11700	81.98	73800	1.10				
21	10100	70.95*	73400	1.30				
24	8900	62.60	72700	1.45				
27	7690	54.07	71700	1.70	**K127**			580
31	6800	47.82	70600	1.90	**KF127**	-	**DRN180L4**	630
37	5720	40.19	68900	2.3	**KA127**			560
41	5150	36.25	67700	2.5	**KAF127**			590
47	4460	31.37	66100	2.9				
53	3940	27.68	64500	3.3				
62	3400	23.91	62700	3.8				
70	3010	21.15	61100	4.3				
26	8130	57.17*	39800	1.00				
30	7100	49.90	41600	1.10				
35	6020	42.33*	42900	1.20				
40	5260	37.00*	43200	1.35				
45	4650	32.69	42900	1.55				
47	4450	31.28*	42700	1.55				
51	4120	29.00	42400	1.75	**K107**			430
56	3740	26.32	42000	1.90	**KF107**	-	**DRN180L4**	440
65	3220	22.62	41200	2.2	**KA107**			400
75	2810	19.74	40300	2.6	**KAF107**			425
88	2380	16.75	39300	3.0				
101	2080	14.64	38300	3.3				
110	1910	13.43	36700	2.3				
126	1670	11.73	35800	2.6				
149	1410	9.94	34700	3.0				
48	4380	30.82	23500	1.00				
53	3970	27.91	23800	1.10				
60	3520	24.75	24100	1.20				
66	3180	22.37	24200	1.35	**K97**			315
78	2700	18.96	24100	1.60	**KF97**	-	**DRN180L4**	335
89	2360	16.56	24000	1.85	**KA97**			300
107	1970	13.85	23700	2.2	**KAF97**			325
123	1710	11.99	23300	2.3				
142	1480	10.41	21800	1.95				
170	1240	8.71	21300	2.2				

P_N = 22 kW

n_a min^{-1}	M_a Nm	i	F_{Ra} N	SEW f_B	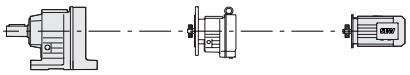			m kg
76	2770	19.45	14500	0.85				
85	2480	17.42	14800	0.90				
102	2050	14.45	15200	1.00	**K87**			255
118	1790	12.56	15300	1.10	**KF87**	-	**DRN180L4**	265
132	1590	11.17	14200	0.95	**KA87**			245
148	1420	10.00	14300	1.05	**KAF87**			255
178	1180	8.29	14300	1.20				
205	1030	7.21	14200	1.25				

P_N = 30 kW

n_a min^{-1}	M_a Nm	i	F_{Ra} N	SEW f_B	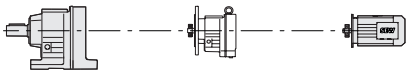			m kg
4.2	63700	355	190000	0.85				
5.7	47300	261	190000	1.10	**K187**			2080
6.7	40100	221	190000	1.30	**KH187**	**R107**	**DRN200L4**	2010
7.7	35000	193	190000	1.50				
9.1	29500	163	190000	1.80				
6.1	43700	244	150000	0.80				
6.9	38200	213	150000	0.90				
7.2	37200	206	150000	0.95	**K167**			1490
8.2	32200	180	150000	1.10	**KH167**	**R107**	**DRN200L4**	1460
9.3	28900	160	150000	1.20				
11	24500	135	150000	1.45				
13	21400	118	150000	1.65				
12	22200	122	95000	0.90	**K157** **KF157** **KA157** **KAF157**	**R107**	**DRN200L4**	1100 1180 1060 1120
8.2	34800	179.86	190000	1.50				
9.0	32000	165.21	190000	1.65				
10	28000	144.59	190000	1.90				
11	25100	129.69	190000	2.1	**K187**			1900
13	21800	112.60	190000	2.4	**KH187**	-	**DRN200L4**	1830
14	19800	102.16	190000	2.7				
17	17000	88.00	190000	3.1				
13	21300	109.83	150000	1.65				
17	17000	87.86	150000	2.1				
19	15100	78.14	150000	2.3	**K167**			1320
22	13200	68.07	150000	2.7	**KH167**	-	**DRN200L4**	1280
24	11800	60.74	150000	3.0				
15	19400	100.22	92700	1.05				
16	17700	91.65	92800	1.15				
19	15400	79.75	92400	1.30				
21	13600	70.38	91700	1.45	**K157**			930
24	11800	61.02	90600	1.70	**KF157**			1000
27	10500	54.29	89500	1.90	**KA157**	-	**DRN200L4**	890
32	9060	46.79	87700	2.2	**KAF157**			950
39	7360	38.02	85000	2.7				
47	6060	31.30	82100	3.1				

P_N = 30 kW

n_a min^{-1}	M_a Nm	i	F_{Ra} N	SEW f_B	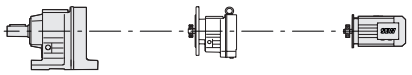			m kg
21	13700	70.95*	64200	0.95	**K127** **KF127** **KA127** **KAF127**	-	**DRN200L4**	690 730 660 700
24	12100	62.60	64600	1.05				
27	10500	54.07	64700	1.25				
31	9260	47.82	64400	1.40				
37	7780	40.19	63700	1.65				
41	7020	36.25	63000	1.85				
47	6070	31.37	62000	2.1				
53	5360	27.68	60900	2.4				
62	4630	23.91	59600	2.8				
35	8190	42.33*	32500	0.90	**K107** **KF107** **KA107** **KAF107**	-	**DRN200L4**	540 550 510 540
40	7160	37.00*	34800	1.00				
47	6060	31.28*	36600	1.10				
51	5610	29.00	37200	1.30				
56	5090	26.32	37700	1.40				
65	4380	22.62	37700	1.65				
75	3820	19.74	37300	1.90				
88	3240	16.75	36700	2.2				
101	2830	14.64	36100	2.4				
110	2600	13.43	34300	1.65				
126	2270	11.73	33700	1.90				
149	1920	9.94	32900	2.2				
170	1680	8.69	32200	2.4				
60	4790	24.75	19600	0.90	**K97** **KF97** **KA97** **KAF97**	-	**DRN200L4**	425 445 405 430
66	4330	22.37	20200	1.00				
78	3670	18.96	20700	1.15				
89	3210	16.56	21000	1.35				
107	2680	13.85	21200	1.60				
123	2320	11.99	21100	1.70				
142	2010	10.41	19500	1.40				
170	1690	8.71	19400	1.60				

P_N = 37 kW

n_a min^{-1}	M_a Nm	i	F_{Ra} N	SEW f_B	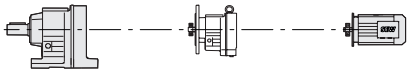			m kg
5.7	58400	261	190000	0.90	**K187** **KH187**	**R107**	**DRN225S4**	2110 2040
6.7	49400	221	190000	1.05				
7.7	43200	193	190000	1.25				
9.1	36400	163	190000	1.45				
8.2	39700	180	150000	0.90	**K167** **KH167**	**R107**	**DRN225S4**	1530 1490
9.3	35700	160	150000	1.00				
11	30200	135	150000	1.15				
13	26400	118	150000	1.35				
14	23900	107	85500	0.85	**K157** **KF157** **KA157** **KAF157**	**R107**	**DRN225S4**	1130 1210 1090 1150
8.2	42900	179.86	190000	1.25	**K187** **KH187**	-	**DRN225S4**	1930 1870
9.0	39400	165.21	190000	1.35				
10	34500	144.59	190000	1.55				
11	30900	129.69	190000	1.70				
13	26800	112.60	190000	1.95				
15	24400	102.16	190000	2.2				
17	21000	88.00	190000	2.5				

P_N = 37 kW

n_a min^{-1}	M_a Nm	i	F_{Ra} N	SEW f_B	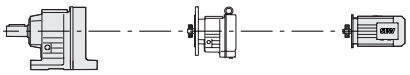			m kg
13	26200	109.83	150000	1.35				
17	20900	87.86	150000	1.65				
19	18600	78.14	150000	1.90	**K167**	-	**DRN225S4**	1350
22	16200	68.07	150000	2.2	**KH167**			1310
24	14500	60.74	150000	2.4				
29	12300	51.77	150000	2.8				
15	23900	100.22	82800	0.85				
16	21900	91.65	83700	0.90				
19	19000	79.75	84500	1.05	**K157**			960
21	16800	70.38	84800	1.20	**KF157**			1040
24	14500	61.02	84600	1.35	**KA157**	-	**DRN225S4**	920
27	12900	54.29	84100	1.55	**KAF157**			980
32	11200	46.79	83100	1.80				
39	9060	38.02	81200	2.2				
47	7460	31.30	79000	2.6				
24	14900	62.60	57500	0.85				
27	12900	54.07	58600	1.00				
31	11400	47.82	59000	1.15				
37	9580	40.19	59100	1.35				
41	8640	36.25	58900	1.50				
47	7480	31.37	58400	1.75	**K127**			720
54	6600	27.68	57800	1.95	**KF127**	-	**DRN225S4**	770
62	5700	23.91	56800	2.3	**KA127**			700
70	5040	21.15	55900	2.6	**KAF127**			730
83	4240	17.77	54500	3.1				
103	3420	14.35	52500	3.5				
116	3050	12.79	50200	2.8				
138	2560	10.74	48600	3.1				
171	2070	8.68	46500	3.5				
40	8820	37.00*	26000	0.80				
47	7460	31.28*	29800	0.90				
51	6910	29.00	31100	1.05				
56	6270	26.32	32300	1.15				
66	5390	22.62	33700	1.35	**K107**			570
75	4710	19.74	34400	1.55	**KF107**	-	**DRN225S4**	580
89	3990	16.75	34500	1.75	**KA107**			540
101	3490	14.64	34100	1.95	**KAF107**			570
110	3200	13.43	32300	1.35				
126	2790	11.73	31900	1.55				
149	2370	9.94	31400	1.75				
171	2070	8.69	30800	1.95				

P_N = 45 kW

n_a min^{-1}	M_a Nm	i	F_{Ra} N	SEW f_B	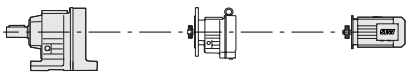			m kg
6.7	60200	221	190000	0.90				
7.7	52600	193	190000	1.00	**K187**	**R107**	**DRN225M4**	2110
9.1	44400	163	190000	1.20	**KH187**			2040
9.3	43500	160	150000	0.80				
11	36800	135	150000	0.95	**K167**	**R107**	**DRN225M4**	1530
13	32200	118	150000	1.10	**KH167**			1490

P_N = 45 kW

n_a min^{-1}	M_a Nm	i	F_{Ra} N	SEW f_B	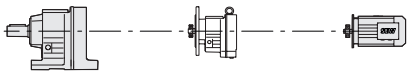			m kg
8.2	52200	179.86	190000	1.00				
9.0	47900	165.21	190000	1.10				
10	41900	144.59	190000	1.25				
11	37600	129.69	190000	1.40	**K187**	-	**DRN225M4**	1930
13	32600	112.60	189800	1.60	**KH187**			1870
15	29600	102.16	187600	1.80				
17	25500	88.00	183700	2.1				
20	21400	73.96	178700	2.5				
13	31800	109.83	150000	1.10				
17	25500	87.86	150000	1.35				
19	22700	78.14	150000	1.55				
22	19700	68.07	150000	1.75	**K167**	-	**DRN225M4**	1350
24	17600	60.74	148900	2.0	**KH167**			1310
29	15000	51.77	145100	2.3				
35	12400	42.89	140400	2.8				
19	23100	79.75	75500	0.85				
21	20400	70.38	76800	1.00				
24	17700	61.02	77700	1.15				
27	15700	54.29	78000	1.25				
32	13600	46.79	77800	1.45	**K157**			960
39	11000	38.02	76900	1.80	**KF157**	-	**DRN225M4**	1040
47	9080	31.30	75400	2.1	**KA157**			920
54	8010	27.62	74300	2.5	**KAF157**			980
62	6940	23.95	72700	2.9				
70	6180	21.31	71400	3.2				
81	5330	18.37	69600	3.8				
31	13900	47.82	52800	0.95				
37	11700	40.19	53900	1.10				
41	10500	36.25	54300	1.25				
47	9090	31.37	54400	1.45				
54	8020	27.68	54200	1.60	**K127**			720
62	6930	23.91	53800	1.90	**KF127**	-	**DRN225M4**	770
70	6130	21.15	53200	2.1	**KA127**			700
83	5150	17.77	52200	2.5	**KAF127**			730
103	4160	14.35	50600	2.9				
116	3710	12.79	48300	2.3				
138	3110	10.74	47000	2.6				
171	2520	8.68	45200	2.9				
51	8410	29.00	23000	0.85				
56	7630	26.32	25400	0.95				
66	6560	22.62	28100	1.10				
75	5720	19.74	29800	1.25	**K107**			570
89	4850	16.75	31100	1.45	**KF107**	-	**DRN225M4**	580
101	4240	14.64	31700	1.60	**KA107**			540
110	3890	13.43	29900	1.10	**KAF107**			570
126	3400	11.73	29900	1.25				
149	2880	9.94	29600	1.45				
171	2520	8.69	29300	1.60				

P_N = 55 kW

n_a min^{-1}	M_a Nm	i	F_{Ra} N	SEW f_B	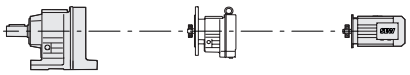			m kg
10	51200	144.59	179800	1.05	**K187** **KH187**	-	**DRN250M4**	2080 2020
11	46000	129.69	179600	1.15				
13	39900	112.60	178600	1.35				
15	36200	102.16	177400	1.45				
17	31200	88.00	174900	1.70				
20	26200	73.96	171300	2.0				
23	22700	64.04	167800	2.3				
17	31100	87.86	145300	1.10	**K167** **KH167**	-	**DRN250M4**	1500 1460
19	27700	78.14	144600	1.25				
22	24100	68.07	143200	1.45				
24	21500	60.74	141700	1.65				
29	18300	51.77	139000	1.90				
35	15200	42.89	135300	2.3				
40	13000	36.61	131800	2.7				
21	24900	70.38	66900	0.80	**K157** **KF157** **KA157** **KAF157**	-	**DRN250M4**	1110 1190 1070 1130
24	21600	61.02	69100	0.90				
27	19200	54.29	70300	1.05				
32	16600	46.79	71200	1.20				
39	13500	38.02	71500	1.50				
47	11100	31.30	71000	1.70				
54	9790	27.62	70400	2.0				
62	8490	23.95	69400	2.4				
70	7550	21.31	68400	2.7				
81	6510	18.37	67000	3.1				
99	5290	14.92	64700	3.8				
117	4490	12.65	62800	4.2				
37	14200	40.19	47400	0.90	**K127** **KF127** **KA127** **KAF127**	-	**DRN250M4**	870 920 850 880
47	11100	31.37	49300	1.15				
54	9810	27.68	49700	1.35				
62	8470	23.91	49900	1.55				
70	7490	21.15	49800	1.75				
83	6300	17.77	49300	2.1				
103	5090	14.35	48300	2.4				
116	4530	12.79	45900	1.90				
138	3810	10.74	45000	2.1				
171	3070	8.68	43600	2.4				

P_N = 75 kW

n_a min^{-1}	M_a Nm	i	F_{Ra} N	SEW f_B	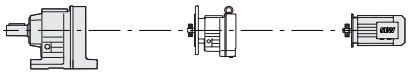			m kg
11	62700	129.69	153800	0.85	**K187** **KH187**	-	**DRN280S4**	2130 2070
13	54400	112.60	156100	0.95				
15	49400	102.16	157000	1.05				
17	42500	88.00	157400	1.25				
20	35700	73.96	156600	1.50				
23	30900	64.04	155000	1.70				
28	25800	53.36	152200	2.1				
33	22000	45.50*	149100	2.4				

P_N = 75 kW

n_a min^{-1}	M_a Nm	i	F_{Ra} N	SEW f_B	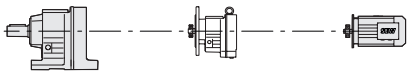			m kg
17	42500	87.86	124500	0.80				
19	37800	78.14	126200	0.95				
22	32900	68.07	127200	1.05				
24	29400	60.74	127300	1.20				
29	25000	51.77	126800	1.40	**K167**	-	**DRN280S4**	1550
35	20700	42.89	125200	1.70	**KH167**			1510
40	17700	36.61	123200	2.0				
46	15600	32.25	121200	2.3				
52	13900	28.77	119300	2.5				
60	11900	24.52	116300	3.0				
32	22600	46.79	58000	0.90				
39	18400	38.02	60800	1.10				
47	15100	31.30	62200	1.25				
54	13300	27.62	62600	1.50	**K157**			1160
62	11600	23.95	62600	1.75	**KF157**	-	**DRN280S4**	1240
70	10300	21.31	62400	1.95	**KA157**			1120
81	8880	18.37	61800	2.3	**KAF157**			1180
99	7210	14.92	60500	2.8				
117	6120	12.65	59200	3.1				
47	15200	31.37	38000	0.85				
54	13400	27.68	40800	0.95				
62	11600	23.91	42200	1.15				
70	10200	21.15	43000	1.25	**K127**			920
83	8590	17.77	43600	1.50	**KF127**	-	**DRN280S4**	960
103	6930	14.35	43700	1.75	**KA127**			890
116	6180	12.79	41100	1.40	**KAF127**			930
138	5190	10.74	41000	1.55				
171	4190	8.68	40400	1.70				

P_N = 90 kW

n_a min^{-1}	M_a Nm	i	F_{Ra} N	SEW f_B	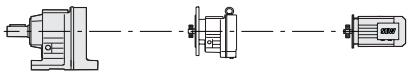			m kg
13	65300	112.60	139300	0.80				
15	59300	102.16	141700	0.90				
17	51100	88.00	144200	1.05				
20	42900	73.96	145500	1.25				
23	37200	64.04	145400	1.45	**K187**	-	**DRN280M4**	2250
28	31000	53.36	144200	1.70	**KH187**			2180
33	26400	45.50*	142300	2.0				
35	24700	42.51	141300	2.2				
38	22400	38.57	139700	2.4				
22	39500	68.07	115100	0.90				
24	35200	60.74	116600	1.00				
29	30000	51.77	117600	1.15				
35	24900	42.89	117600	1.40				
40	21200	36.61	116700	1.65	**K167**	-	**DRN280M4**	1670
46	18700	32.25	115500	1.85	**KH167**			1630
51	16700	28.77	114200	2.1				
60	14200	24.52	111900	2.5				
73	11800	20.32	108800	3.0				
85	10100	17.34	105900	3.5				

P_N = 90 kW

n_a min^{-1}	M_a Nm	i	F_{Ra} N	SEW f_B	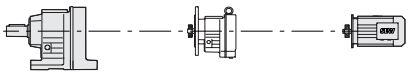			m kg
39	22100	38.02	52700	0.90	**K157 KF157 KA157 KAF157**	-	**DRN280M4**	1270
54	16000	27.62	56700	1.25				1350
62	13900	23.95	57500	1.45				1230
70	12400	21.31	57900	1.60				1290
81	10700	18.37	57900	1.90				
99	8660	14.92	57400	2.3				
117	7340	12.65	56600	2.6				
62	13900	23.91	35500	0.95	**K127 KF127 KA127 KAF127**	-	**DRN280M4**	1040
70	12300	21.15	37800	1.05				1080
83	10300	17.77	39200	1.25				1010
103	8330	14.35	40200	1.45				1050
116	7420	12.79	37600	1.15				
138	6230	10.74	38000	1.30				
171	5040	8.68	38000	1.45				

P_N = 110 kW

n_a min^{-1}	M_a Nm	i	F_{Ra} N	SEW f_B	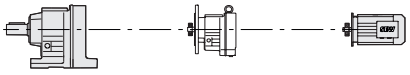			m kg
17	62100	88.00	126800	0.85	**K187 KH187**	-	**DRN315S4**	2490
20	52200	73.96	130800	1.00				2420
23	45200	64.04	132700	1.15				
28	37700	53.36	133600	1.40				
33	32100	45.50*	133200	1.65				
39	27200	38.57	131900	1.95				
45	23500	33.23	130100	2.3				
53	19700	27.92	127500	2.7				
35	30000	42.51	132800	1.75	**K187 KH187**	-	**DRN315S4/ ERF/NS**	2490
								2420
25	42900	60.74	102400	0.80	**K167 KH167**	-	**DRN315S4**	1910
29	36500	51.77	105500	0.95				1870
35	30300	42.89	107500	1.15				
41	25800	36.61	108100	1.35				
52	20300	28.77	107400	1.70				
61	17300	24.52	106100	2.0				
73	14300	20.32	104000	2.4				
86	12200	17.34	101800	2.9				
46	22800	32.25	107900	1.55	**K167 KH167**	-	**DRN315S4/ ERF/NS**	1910
								1870
62	16900	23.95	50800	1.20	**K157 KF157 KA157 KAF157**	-	**DRN315S4/ ERF/NS**	1520
								1590
								1480
								1540
70	15000	21.31	51900	1.35	**K157 KF157 KA157 KAF157**	-	**DRN315S4**	1520
81	13000	18.37	52700	1.55				1590
100	10500	14.92	53200	1.90				1480
118	8930	12.65	53000	2.1				1540

P_N = 132 kW

n_a min^{-1}	M_a Nm	i	F_{Ra} N	SEW f_B	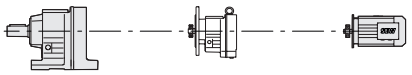			m kg
20	62700	73.96	114700	0.85				
23	54200	64.04	118700	1.00				
28	45200	53.36	121900	1.15				
33	38500	45.50*	123300	1.40				
45	28100	33.23	122900	1.90	**K187**	-	**DRN315M4**	2510
53	23700	27.92	121400	2.2	**KH187**			2450
62	20500	24.18	119600	2.6				
74	17100	20.15	116800	2.9				
87	14600	17.18	114000	3.2				
35	36000	42.51	123500	1.45	**K187**	-	**DRN315M4/**	2510
39	32700	38.57	123500	1.60	**KH187**		**ERF/NS**	2450
29	43900	51.77	92100	0.80				
35	36300	42.89	96400	0.95				
41	31000	36.61	98600	1.15	**K167**	-	**DRN315M4**	1930
61	20800	24.52	99800	1.70	**KH167**			1890
73	17200	20.32	98700	2.0				
86	14700	17.34	97300	2.4				
46	27300	32.25	99600	1.30	**K167**	-	**DRN315M4/**	1930
52	24400	28.77	99900	1.45	**KH167**		**ERF/NS**	1890
					K157			1540
62	20300	23.95	43400	1.00	**KF157**	-	**DRN315M4/**	1610
70	18100	21.31	45300	1.10	**KA157**		**ERF/NS**	1500
					KAF157			1560
					K157			1540
81	15600	18.37	47000	1.30	**KF157**			1610
100	12600	14.92	48500	1.60	**KA157**	-	**DRN315M4**	1500
118	10700	12.65	49100	1.75	**KAF157**			1560

P_N = 160 kW

n_a min^{-1}	M_a Nm	i	F_{Ra} N	SEW f_B	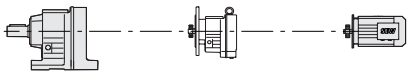			m kg
23	65800	64.04	100900	0.80				
28	54900	53.36	107100	0.95				
33	46800	45.50*	110600	1.15				
45	34200	33.23	113700	1.55	**K187**	-	**DRN315L4**	2640
53	28700	27.92	113600	1.85	**KH187**			2580
61	24900	24.18	112900	2.1				
74	20700	20.15	111300	2.4				
87	17700	17.18	109300	2.6				
41	37600	36.61	86500	0.95				
61	25200	24.52	91700	1.40	**K167**	-	**DRN315L4**	2060
73	20900	20.32	92000	1.70	**KH167**			2020
86	17800	17.34	91600	1.95				
					K157			1670
81	18900	18.37	39800	1.05	**KF157**			1750
100	15300	14.92	42600	1.30	**KA157**	-	**DRN315L4**	1630
117	13000	12.65	44100	1.45	**KAF157**			1690

P_N = 200 kW

n_a min^{-1}	M_a Nm	i	F_{Ra} N	SEW f_B	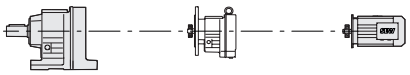			m kg
33	58400	45.50*	92600	0.90	**K187**	**-**	**DRN315H4**	2760
53	35800	27.92	102500	1.50	**KH187**			2700
62	31000	24.18	103300	1.70				
74	25800	20.15	103200	1.90				
87	22000	17.18	102400	2.1				
45	42600	33.23	100500	1.25	**K187**	**-**	**DRN315H4/**	2760
					KH187		**ERF/NS**	2700
61	31500	24.52	80200	1.10	**K167**	**-**	**DRN315H4/**	2180
					KH167		**ERF/NS**	2140
73	26100	20.32	82500	1.35	**K167**	**-**	**DRN315H4**	2180
86	22200	17.34	83400	1.55	**KH167**			2140
81	23600	18.37	23200	0.85	**K157**	**-**	**DRN315H4**	1790
100	19100	14.92	34300	1.05	**KF157**			1860
118	16200	12.65	37000	1.15	**KA157**			1750
					KAF157			1810

4.4.3 Selection tables for low output speeds K..R..DRN.. in Nm

$M_{a\,max}$ = 220 Nm

n_a min^{-1}	i	F_{Ra} N	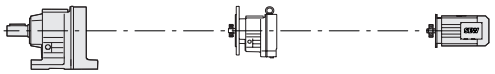			m kg
4.5	304	5030	**K37 KF37 KA37 KAF37**	**R17**	**DRN63M4**	20 23 20 22

$M_{a\,max}$ = 230 Nm

n_a min^{-1}	i	F_{Ra} N	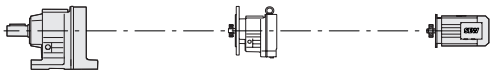			m kg
0.2	6832	4940	**K37 KF37 KA37 KAF37**	**R17**	**DRN63MS4**	20 22 19 21
0.23	5922	4940				
0.25	5491	4940				
0.29	4759	4940				
0.33	4160	4940				
0.38	3645	4940				
0.43	3205	4940				
0.49	2801	4940				
0.56	2454	4940				
0.64	2166	4940				
0.73	1891	4940				
0.83	1660	4940				
0.94	1466	4940				
1.1	1288	4940				
1.2	1136	4940				
1.4	996	4940	**K37 KF37 KA37 KAF37**	**R17**	**DRN63MS4**	19 22 19 21
1.6	876	4940				
1.8	761	4940				
2.1	671	4940				
2.4	585	4940				
2.7	512	4940				
3.1	451	4940				
3.5	396	4940				
4	346	4940				
5.2	267	4940	**K37 KF37 KA37 KAF37**	**R17**	**DRN63M4**	20 23 20 22
5.9	234	4940				
6.9	205	4940	**K37 KF37 KA37 KAF37**	**R17**	**DRN71MS4**	21 23 21 22
7.8	181	4940				
8.8	160	4940				
10	136	4940	**K37 KF37 KA37 KAF37**	**R17**	**DRN71M4**	22 24 22 24
11	127	4940				
13	110	4940				
15	96	4940	**K37 KF37 KA37 KAF37**	**R17**	**DRN80MK4**	24 26 24 26

$M_{a\,max}$ = 295 Nm

n_a min^{-1}	i	F_{Ra} N	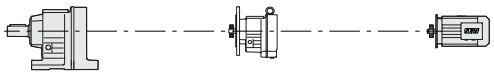			m kg
19	75	7500	**K39** **KF39** **KA39** **KAF39**	**R17**	**DRN80M4**	32 34 31 33

$M_{a\,max}$ = 300 Nm

n_a min^{-1}	i	F_{Ra} N	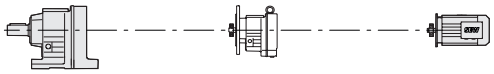			m kg
0.34	4057	7500				
0.41	3370	7500				
0.47	2906	7500				
0.55	2508	7500				
0.58	2367	7500				
0.64	2162	7500	**K39** **KF39** **KA39** **KAF39**	**R17**	**DRN63MS4**	25 26 24 25
0.73	1881	7500				
0.78	1762	7500				
0.85	1622	7500				
0.92	1494	7500				
1	1321	7500				
1.2	1169	7500				
1.3	1093	7500				
1.4	956	7500				
1.7	814	7500	**K39** **KF39** **KA39** **KAF39**	**R17**	**DRN63MS4**	24 26 23 25
1.9	711	7500				
2.3	605	7500				
2.7	504	7500				
3	454	7500				
3.5	399	7500	**K39** **KF39** **KA39** **KAF39**	**R17**	**DRN63M4**	25 27 24 26
3.8	365	7500				
4.4	312	7500				
4.6	299	7500				
5.5	254	7500	**K39** **KF39** **KA39** **KAF39**	**R17**	**DRN71MS4**	26 27 25 26
6	234	7500				
6.7	210	7500				
7.5	189	7500	**K39** **KF39** **KA39** **KAF39**	**R17**	**DRN71M4**	27 29 26 28
8.1	174	7500				
9.1	156	7500				
10	142	7500				
12	117	7500	**K39** **KF39** **KA39** **KAF39**	**R17**	**DRN80MK4**	29 31 28 30

$M_{a\,max}$ = 430 Nm

n_a min^{-1}	i	F_{Ra} N	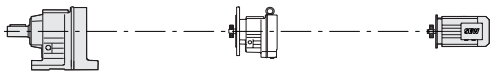			m kg
15	99	8400	**K47** **KF47** **KA47** **KAF47**	**R37**	**DRN80M4**	42 45 41 44

$M_{a\,max}$ = 450 Nm

n_a min^{-1}	i	F_{Ra} N	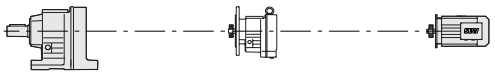			m kg
0.14	10138	8250				
0.16	8534	8250				
0.18	7662	8250				
0.2	6826	8250				
0.23	5983	8250				
0.27	5159	8250				
0.3	4601	8250	**K47**	**R37**	**DRN63MS4**	34
0.35	3940	8250	**KF47**			37
0.4	3477	8250	**KA47**			33
0.45	3043	8250	**KAF47**			36
0.51	2733	8250				
0.59	2354	8250				
0.67	2063	8250				
0.76	1819	8250				
0.87	1586	8250				
0.99	1388	8250				
1.1	1222	8250	**K47**	**R37**	**DRN63MS4**	33
1.3	1097	8250	**KF47**			37
1.5	945	8250	**KA47**			33
1.7	831	8250	**KAF47**			35
1.9	718	8250				
2.2	639	8250	**K47**	**R37**	**DRN63M4**	34
2.5	552	8250	**KF47**			37
2.8	495	8250	**KA47**			33
3.2	426	8250	**KAF47**			36
			K47	**R37**	**DRN71MS4**	35
3.8	375	8250	**KF47**			38
4.3	327	8250	**KA47**			34
			KAF47			37
			K47	**R37**	**DRN71M4**	36
4.9	289	8250	**KF47**			39
5.5	256	8250	**KA47**			35
6.3	225	8250	**KAF47**			38
			K47	**R37**	**DRN80MK4**	38
7.2	198	8250	**KF47**			42
8.4	171	8250	**KA47**			37
9.4	153	8250	**KAF47**			40
			K47	**R37**	**DRN80M4**	42
11	131	8250	**KF47**			45
13	112	8250	**KA47**			41
			KAF47			44
			K47	**R37**	**DRN90S4**	48
15	94	8250	**KF47**			51
			KA47			47
			KAF47			50

$M_{a\,max}$ = 500 Nm

n_a min^{-1}	i	F_{Ra} N	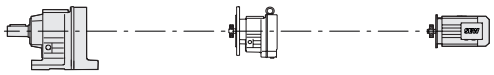			m kg
0.19	7137	9000	**K49**	**R37**	**DRN63MS4**	43
0.23	5991	9000	**KF49**			45
0.27	5120	9000	**KA49**			40
0.34	4034	9000	**KAF49**			45
0.39	3580	9000				
0.45	3081	9000				
0.5	2773	9000				
0.54	2545	9000				
0.58	2372	9000				
0.65	2118	9000				
0.71	1941	9000				
0.79	1741	9000				
0.85	1632	9000				
0.91	1521	9000				
1.1	1228	9000				
1.4	1000	9000				
0.97	1424	9000	**K49**	**R37**	**DRN63MS4**	43
1.1	1309	9000	**KF49**			45
1.2	1120	9000	**KA49**			40
1.5	908	9000	**KAF49**			45
1.7	802	9000				
2	701	9000	**K49**	**R37**	**DRN63M4**	44
2.1	645	9000	**KF49**			46
2.3	595	9000	**KA49**			41
2.5	543	9000	**KAF49**			46
2.7	501	9000				
3.1	449	9000	**K49**	**R37**	**DRN71MS4**	44
3.5	401	9000	**KF49**			46
3.9	360	9000	**KA49**			42
			KAF49			46
4.3	330	9000	**K49**	**R37**	**DRN71M4**	46
4.7	300	9000	**KF49**			47
5.2	274	9000	**KA49**			43
5.8	243	9000	**KAF49**			48
6.6	217	9000	**K49**	**R37**	**DRN80MK4**	48
7.4	193	9000	**KF49**			50
8.2	176	9000	**KA49**			45
			KAF49			50
9.5	152	9000	**K49**	**R37**	**DRN80M4**	51
12	125	9000	**KF49**			53
			KA49			48
			KAF49			53
15	99	9000	**K49**	**R37**	**DRN90S4**	57
			KF49			59
			KA49			54
			KAF49			59

$M_{a\,max}$ = 600 Nm

n_a min^{-1}	i	F_{Ra} N	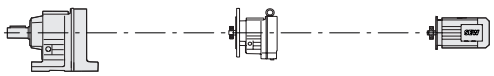			m kg
6.7	215	7630	**K57**	**R37**	**DRN80MK4**	44
			KF57			49
			KA57			42
			KAF57			48

$M_{a\,max}$ = 600 Nm

n_a min^{-1}	i	F_{Ra} N	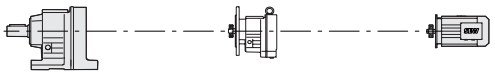			m kg
11	129	7630	**K57** **KF57** **KA57** **KAF57**	**R37**	**DRN90S4**	53 58 51 57

$M_{a\,max}$ = 615 Nm

n_a min^{-1}	i	F_{Ra} N	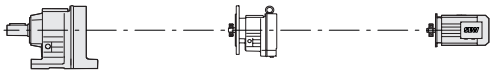			m kg
4.4	319	7510	**K57** **KF57** **KA57** **KAF57**	**R37**	**DRN71M4**	42 47 40 46
15	97	7510	**K57** **KF57** **KA57** **KAF57**	**R37**	**DRN90S4**	53 58 51 57

$M_{a\,max}$ = 630 Nm

n_a min^{-1}	i	F_{Ra} N	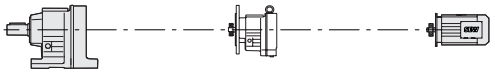			m kg
0.11	12169	7380	**K57** **KF57** **KA57** **KAF57**	**R37**	**DRN63MS4**	40 44 37 43
0.12	11162	7380				
0.15	9503	7380				
0.16	8547	7380				
0.19	7277	7380				
0.21	6478	7380				
0.24	5662	7380				
0.27	5033	7380				
0.32	4340	7380				
0.36	3854	7380				
0.41	3390	7380				
0.47	2924	7380				
0.53	2593	7380				
0.61	2249	7380				
0.7	1986	7380				
0.79	1743	7380	**K57** **KF57** **KA57** **KAF57**	**R37**	**DRN63MS4**	39 44 37 43
0.9	1539	7380				
1	1354	7380				
1.2	1174	7380				
1.3	1036	7380				
1.5	906	7380	**K57** **KF57** **KA57** **KAF57**	**R37**	**DRN63M4**	40 45 38 44
1.7	806	7380				
2	699	7380				
2.2	615	7380				
2.6	544	7380	**K57** **KF57** **KA57** **KAF57**	**R37**	**DRN71MS4**	41 45 39 44
3	473	7380				
3.4	421	7380	**K57** **KF57** **KA57** **KAF57**	**R37**	**DRN71M4**	42 47 40 46
3.9	362	7380				

$M_{a\,max}$ = 630 Nm

n_a min^{-1}	i	F_{Ra} N	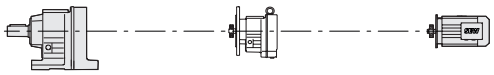			m kg
5.1	280	7380	**K57**	**R37**	**DRN80MK4**	44
5.8	246	7380	**KF57**			49
7.5	192	7380	**KA57**			42
			KAF57			48
8.7	166	7380	**K57**	**R37**	**DRN80M4**	48
10	145	7380	**KF57**			52
			KA57			45
			KAF57			51
13	111	7380	**K57**	**R37**	**DRN90S4**	53
			KF57			58
			KA57			51
			KAF57			57

$M_{a\,max}$ = 820 Nm

n_a min^{-1}	i	F_{Ra} N	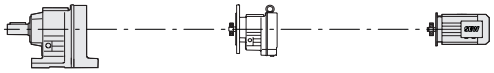			m kg
4	361	10300	**K67**	**R37**	**DRN80MK4**	50
4.5	323	10300	**KF67**			56
			KA67			47
			KAF67			53
6.6	217	10300	**K67**	**R37**	**DRN80M4**	53
			KF67			59
			KA67			51
			KAF67			56

$M_{a\,max}$ = 830 Nm

n_a min^{-1}	i	F_{Ra} N	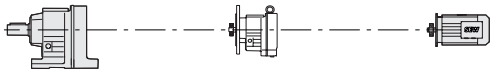			m kg
0.37	3750	10200	**K67**	**R37**	**DRN63MS4**	45
			KF67			51
			KA67			43
			KAF67			48
3.4	420	10200	**K67**	**R37**	**DRN71M4**	48
			KF67			53
			KA67			45
			KAF67			51
7.5	191	10200	**K67**	**R37**	**DRN80M4**	53
			KF67			59
			KA67			51
			KAF67			56

$M_{a\,max}$ = 850 Nm

n_a min^{-1}	i	F_{Ra} N	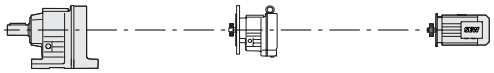			m kg
8.8	166	10000	**K67**	**R37**	**DRN90S4**	59
			KF67			65
			KA67			57
			KAF67			62

$M_{a\,max}$ = 870 Nm

n_a min^{-1}	i	F_{Ra} N	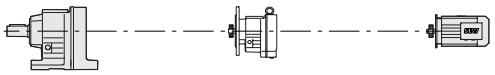			m kg
0.11	12139	9840				
0.12	11134	9840				
0.15	9479	9840				
0.17	8173	9840				
0.19	7259	9840				
0.21	6462	9840	**K67**			45
0.24	5648	9840	**KF67**	**R37**	**DRN63MS4**	51
0.28	4846	9840	**KA67**			43
0.32	4329	9840	**KAF67**			48
0.42	3315	9840				
0.47	2917	9840				
0.55	2532	9840				
0.62	2244	9840				
0.7	1981	9840				
0.79	1739	9840	**K67**			45
0.9	1535	9840	**KF67**	**R37**	**DRN63MS4**	51
1	1351	9840	**KA67**			42
			KAF67			48
1.2	1171	9840	**K67**			46
1.3	1034	9840	**KF67**	**R37**	**DRN63M4**	52
1.5	903	9840	**KA67**			43
1.7	793	9840	**KAF67**			49
			K67			47
2	697	9840	**KF67**	**R37**	**DRN71MS4**	52
2.3	613	9840	**KA67**			44
			KAF67			50
			K67			48
2.6	542	9840	**KF67**	**R37**	**DRN71M4**	53
3	471	9840	**KA67**			45
			KAF67			51
			K67			50
5.1	279	9840	**KF67**	**R37**	**DRN80MK4**	56
			KA67			47
			KAF67			53
			K67			53
5.9	246	9840	**KF67**	**R37**	**DRN80M4**	59
			KA67			51
			KAF67			56
			K67			59
10	144	9840	**KF67**	**R37**	**DRN90S4**	65
			KA67			57
			KAF67			62
			K67			62
12	122	9840	**KF67**	**R37**	**DRN90L4**	68
			KA67			60
			KAF67			65

$M_{a\,max}$ = 1550 Nm

n_a min^{-1}	i	F_{Ra} N	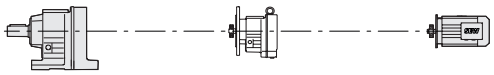			m kg
0.09	15310	15400				
0.1	14043	15400				
0.12	11955	15400				
0.14	10217	15400				
0.16	8809	15400				
0.18	7528	15400	**K77**	**R37**	**DRN63MS4**	70
0.21	6606	15400	**KF77**			78
0.24	5774	15400	**KA77**			62
0.27	5089	15400	**KAF77**			70
0.31	4489	15400				
0.35	3961	15400				
0.4	3485	15400				
0.48	2901	15400				
0.51	2717	15400				
0.58	2370	15400	**K77**	**R37**	**DRN63M4**	70
			KF77			79
			KA77			63
			KAF77			71
0.67	2050	15400	**K77**	**R37**	**DRN63M4**	70
0.78	1772	15400	**KF77**			78
0.91	1514	15400	**KA77**			63
			KAF77			71
1	1388	15400	**K77**	**R37**	**DRN71MS4**	71
1.2	1218	15400	**KF77**			79
1.3	1053	15400	**KA77**			63
			KAF77			71
1.5	924	15400	**K77**	**R37**	**DRN71M4**	72
1.7	815	15400	**KF77**			80
2	709	15400	**KA77**			64
			KAF77			72
2.3	622	15400	**K77**	**R37**	**DRN80MK4**	74
2.6	552	15400	**KF77**			82
3	485	15400	**KA77**			67
			KAF77			75
3.4	428	15400	**K77**	**R37**	**DRN80M4**	78
3.9	367	15400	**KF77**			86
			KA77			70
			KAF77			78
4.4	328	15400	**K77**	**R37**	**DRN90S4**	83
5	290	15400	**KF77**			92
5.8	252	15400	**KA77**			76
			KAF77			84
6.6	221	15400	**K77**	**R37**	**DRN90L4**	87
7.5	195	15400	**KF77**			95
8.4	175	15400	**KA77**			79
			KAF77			87
9.4	154	15400	**K77**	**R37**	**DRN100LS4**	91
			KF77			99
			KA77			83
			KAF77			91

$M_{a\,max}$ = 2600 Nm

n_a min^{-1}	i	F_{Ra} N	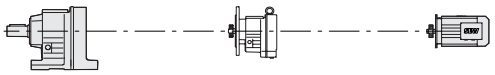			m kg
10	141	27400	**K87** **KF87** **KA87** **KAF87**	**R57**	**DRN112M4**	155 165 145 155

$M_{a\,max}$ = 2700 Nm

n_a min^{-1}	i	F_{Ra} N	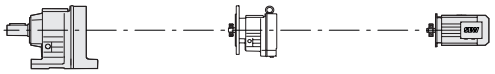			m kg
0.09 **0.1** **0.12** **0.14** **0.15** **0.18** **0.2** **0.23** **0.26** **0.3**	14829 13168 11737 10217 9073 7854 6832 5930 5240 4562	27300 27300 27300 27300 27300 27300 27300 27300 27300 27300	**K87** **KF87** **KA87** **KAF87**	**R57**	**DRN63MS4**	120 130 105 120
0.34 **0.38** **0.44** **0.5**	4037 3609 3107 2728	27300 27300 27300 27300	**K87** **KF87** **KA87** **KAF87**	**R57**	**DRN63M4**	120 130 105 120
0.59	2371	27300	**K87** **KF87** **KA87** **KAF87**	**R57**	**DRN71MS4**	120 130 110 120
0.67 **0.76**	2088 1854	27300 27300	**K87** **KF87** **KA87** **KAF87**	**R57**	**DRN71MS4**	120 130 105 120
0.85 **1** **1.2**	1657 1415 1229	27300 27300 27300	**K87** **KF87** **KA87** **KAF87**	**R57**	**DRN71M4**	120 130 110 120
1.3 **1.5** **1.7**	1078 951 837	27300 27300 27300	**K87** **KF87** **KA87** **KAF87**	**R57**	**DRN80MK4**	125 130 110 125
2 **2.3**	726 638	27300 27300	**K87** **KF87** **KA87** **KAF87**	**R57**	**DRN80M4**	125 135 115 125
2.6 **3.1** **3.4**	562 474 426	27300 27300 27300	**K87** **KF87** **KA87** **KAF87**	**R57**	**DRN90S4**	130 140 120 135
3.9 **4.4**	373 330	27300 27300	**K87** **KF87** **KA87** **KAF87**	**R57**	**DRN90L4**	135 145 125 135
4.9 **5.8** **6.1** **7.2**	294 250 236 201	27300 27300 27300 27300	**K87** **KF87** **KA87** **KAF87**	**R57**	**DRN100LS4**	140 150 125 140

$M_{a\,max}$ = 2700 Nm

n_a min^{-1}	i	F_{Ra} N	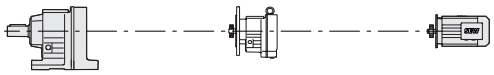			m kg
8	183	27300	**K87**	**R57**	**DRN100L4**	145
9.2	159	27300	**KF87**			155
			KA87			135
			KAF87			150

$M_{a\,max}$ = 4300 Nm

n_a min^{-1}	i	F_{Ra} N	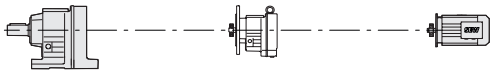			m kg
0.08	16666	40000	**K97**	**R57**	**DRN63MS4**	180
0.08	18091	40000	**KF97**			200
0.09	14897	40000	**KA97**			160
0.1	13182	40000	**KAF97**			185
0.12	11677	40000				
0.13	10317	40000				
0.15	9083	40000				
0.17	8054	40000				
0.2	6970	40000				
0.23	6027	40000	**K97**	**R57**	**DRN63M4**	180
0.26	5391	40000	**KF97**			200
0.29	4669	40000	**KA97**			160
0.34	4082	40000	**KAF97**			185
0.39	3583	40000	**K97**	**R57**	**DRN71MS4**	180
0.45	3108	40000	**KF97**			200
			KA97			160
			KAF97			185
0.51	2757	40000	**K97**	**R57**	**DRN71M4**	180
			KF97			200
			KA97			165
			KAF97			190
0.58	2419	40000	**K97**	**R57**	**DRN71M4**	180
0.67	2123	40000	**KF97**			200
			KA97			165
			KAF97			190
0.77	1856	40000	**K97**	**R57**	**DRN80MK4**	185
0.88	1625	40000	**KF97**			205
1	1430	40000	**KA97**			165
			KAF97			190
1.1	1261	40000	**K97**	**R57**	**DRN80M4**	185
1.3	1102	40000	**KF97**			205
1.5	957	40000	**KA97**			170
			KAF97			195
1.7	855	40000	**K97**	**R57**	**DRN90S4**	195
2	743	40000	**KF97**			215
			KA97			175
			KAF97			200
2.2	652	40000	**K97**	**R57**	**DRN90L4**	195
2.6	573	40000	**KF97**			215
2.9	504	40000	**KA97**			180
			KAF97			205
3.3	437	40000	**K97**	**R57**	**DRN100LS4**	200
3.8	382	40000	**KF97**			220
4.2	342	40000	**KA97**			180
			KAF97			205

$M_{a\,max}$ = 4300 Nm

n_a min^{-1}	i	F_{Ra} N	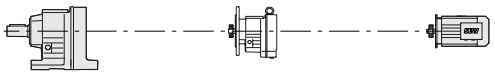			m kg
4.8	305	40000	**K97** **KF97** **KA97** **KAF97**	**R57**	**DRN100L4**	205 225 190 215
5.7	258	40000				
6.3	232	40000	**K97** **KF97** **KA97** **KAF97**	**R57**	**DRN112M4**	215 235 200 225
7.3	199	40000				

$M_{a\,max}$ = 7200 Nm

n_a min^{-1}	i	F_{Ra} N	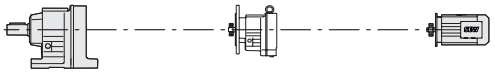			m kg
8.5	174	65000	**K107** **KF107** **KA107** **KAF107**	**R77**	**DRN132M4**	375 385 350 370
9.5	154	65000	**K107** **KF107** **KA107** **KAF107**	**R77**	**DRN132L4**	385 395 355 380
11	140	65000				

$M_{a\,max}$ = 8000 Nm

n_a min^{-1}	i	F_{Ra} N	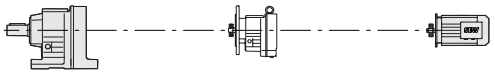			m kg
0.1	14311	65000	**K107** **KF107** **KA107** **KAF107**	**R77**	**DRN63MS4**	310 320 280 305
0.11	12211	65000	**K107** **KF107** **KA107** **KAF107**	**R77**	**DRN63M4**	310 320 285 305
0.13	10677	65000				
0.14	9524	65000				
0.17	8328	65000				
0.19	7270	65000	**K107** **KF107** **KA107** **KAF107**	**R77**	**DRN71MS4**	310 325 285 310
0.23	6184	65000				
0.25	5662	65000	**K107** **KF107** **KA107** **KAF107**	**R77**	**DRN71M4**	310 325 285 310
0.28	5138	65000				
0.32	4359	65000				
0.37	3810	65000				
0.43	3358	65000	**K107** **KF107** **KA107** **KAF107**	**R77**	**DRN80MK4**	315 325 285 310
0.48	2977	65000				
0.55	2599	65000				
0.63	2286	65000	**K107** **KF107** **KA107** **KAF107**	**R77**	**DRN80M4**	320 330 290 315
0.74	1939	65000				
0.85	1713	65000	**K107** **KF107** **KA107** **KAF107**	**R77**	**DRN90S4**	320 335 295 320
0.94	1554	65000				
1.1	1336	65000				

$M_{a\,max}$ = 8000 Nm

n_a min^{-1}	i	F_{Ra} N	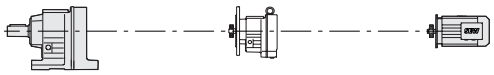			m kg
1.3	1166	65000	**K107**	**R77**	**DRN90L4**	325
1.4	1030	65000	**KF107**			335
1.6	904	65000	**KA107**			300
			KAF107			320
1.8	793	65000	**K107**	**R77**	**DRN100LS4**	330
2.1	696	65000	**KF107**			340
2.4	615	65000	**KA107**			300
			KAF107			325
2.8	522	65000	**K107**	**R77**	**DRN100L4**	335
3.2	461	65000	**KF107**			350
			KA107			310
			KAF107			335
3.6	408	65000	**K107**	**R77**	**DRN112M4**	345
4	364	65000	**KF107**			360
			KA107			320
			KAF107			340
4.6	318	65000	**K107**	**R77**	**DRN132S4**	355
5.1	286	65000	**KF107**			370
5.8	251	65000	**KA107**			330
			KAF107			355
6.6	222	65000	**K107**	**R77**	**DRN132M4**	375
7.5	196	65000	**KF107**			385
			KA107			350
			KAF107			370

$M_{a\,max}$ = 12000 Nm

n_a min^{-1}	i	F_{Ra} N	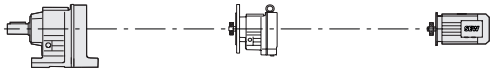			m kg
7.4	200	79700	**K127**	**R87**	**DRN160M4**	600
			KF127			640
			KA127			570
			KAF127			610
8.9	166	79700	**K127**	**R87**	**DRN160L4**	610
10	147	79700	**KF127**			650
			KA127			580
			KAF127			620

$M_{a\,max}$ = 13000 Nm

n_a min^{-1}	i	F_{Ra} N	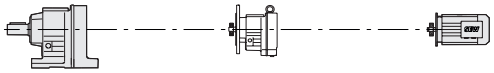			m kg
0.08	17550	79200	**K127**	**R77**	**DRN63M4**	470
0.09	14975	79200	**KF127**			510
0.09	16006	79200	**KA127**			445
			KAF127			480
0.11	12440	79200	**K127**	**R77**	**DRN71MS4**	470
0.13	10915	79200	**KF127**			510
0.14	9819	79200	**KA127**			445
			KAF127			480
0.17	8443	79200	**K127**	**R77**	**DRN71M4**	475
0.19	7482	79200	**KF127**			510
0.22	6565	79200	**KA127**			445
			KAF127			480

$M_{a\,max}$ = 13000 Nm

n_a min^{-1}	i	F_{Ra} N	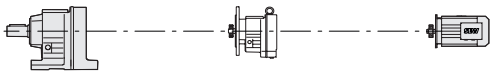			m kg
0.25	5804	79200	**K127**	**R77**	**DRN80MK4**	475
0.29	5027	79200	**KF127**			520
0.32	4423	79200	**KA127**			445
			KAF127			485
0.37	3889	79200	**K127**	**R77**	**DRN80M4**	480
0.43	3311	79200	**KF127**			520
0.48	3009	79200	**KA127**			450
			KAF127			490
0.56	2607	79200	**K127**	**R77**	**DRN90S4**	485
0.64	2268	79200	**KF127**			530
			KA127			455
			KAF127			495
0.76	1926	79200	**K127**	**R77**	**DRN90L4**	485
0.83	1757	79200	**KF127**			530
0.95	1541	79200	**KA127**			455
			KAF127			495
1.1	1342	79200	**K127**	**R77**	**DRN100LS4**	490
1.2	1177	79200	**KF127**			530
1.4	1025	79200	**KA127**			460
			KAF127			500
1.6	899	79200	**K127**	**R77**	**DRN100L4**	495
1.8	790	79200	**KF127**			540
			KA127			470
			KAF127			510
2.1	704	79200	**K127**	**R77**	**DRN112M4**	510
2.4	610	79200	**KF127**			550
2.7	549	79200	**KA127**			480
			KAF127			520
2.7	536	79200	**K127**	**R87**	**DRN132S4**	540
3.1	473	79200	**KF127**			580
3.1	477	79200	**KA127**			510
3.5	418	79200	**KAF127**			550
3.5	418	79200				
4	367	79200	**K127**	**R87**	**DRN132M4**	560
4.4	330	79200	**KF127**			600
			KA127			530
			KAF127			560
5.1	287	79200	**K127**	**R87**	**DRN132L4**	560
5.8	253	79200	**KF127**			610
			KA127			540
			KAF127			570
6.9	213	79200	**K127**	**R87**	**DRN160M4**	600
			KF127			640
			KA127			570
			KAF127			610

$M_{a\,max}$ = 20000 Nm

n_a min^{-1}	i	F_{Ra} N	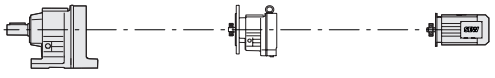			m kg
0.08	17679	111100	**K157**	**R97**	**DRN71MS4**	790
			KF157			870
			KA157			750
			KAF157			810

$M_{a\,max}$ = 20000 Nm

n_a min^{-1}	i	F_{Ra} N	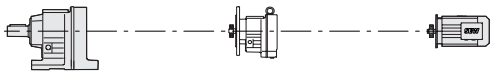			m kg
0.09	15729	111100	**K157**	**R97**	**DRN71M4**	790
0.1	14721	111100	**KF157**			870
0.11	13097	111100	**KA157**			750
0.12	11368	111100	**KAF157**			810
0.14	10114	111100				
0.16	8718	111100	**K157**	**R97**	**DRN80MK4**	790
0.19	7734	111100	**KF157**			870
0.21	6881	111100	**KA157**			750
			KAF157			810
0.24	5931	111100	**K157**	**R97**	**DRN80M4**	800
0.28	5074	111100	**KF157**			870
			KA157			760
			KAF157			820
0.32	4514	111100	**K157**	**R97**	**DRN90S4**	800
0.37	3979	111100	**KF157**			880
0.41	3516	111100	**KA157**			760
			KAF157			820
0.48	3051	111100	**K157**	**R97**	**DRN90L4**	800
0.56	2610	111100	**KF157**			880
			KA157			770
			KAF157			830
0.62	2322	111100	**K157**	**R97**	**DRN100LS4**	810
0.71	2029	111100	**KF157**			890
0.8	1805	111100	**KA157**			770
			KAF157			830
0.87	1659	111100	**K157**	**R97**	**DRN100LS4**	800
			KF157			880
			KA157			770
			KAF157			830
1.1	1365	111100	**K157**	**R97**	**DRN100L4**	810
1.2	1229	111100	**KF157**			890
			KA157			780
			KAF157			830
1.3	1093	111100	**K157**	**R97**	**DRN112M4**	820
1.6	942	111100	**KF157**			900
1.7	854	111100	**KA157**			780
			KAF157			840
1.9	756	111100	**K157**	**R97**	**DRN132S4**	830
2.2	661	111100	**KF157**			910
			KA157			800
			KAF157			850
2.6	567	111100	**K157**	**R97**	**DRN132M4**	850
2.9	504	111100	**KF157**			930
			KA157			810
			KAF157			870
3.4	434	111100	**K157**	**R97**	**DRN132L4**	860
3.8	385	111100	**KF157**			940
3.9	379	111100	**KA157**			820
			KAF157			880
4.4	333	111100	**K157**	**R97**	**DRN160M4**	890
4.5	325	111100	**KF157**			970
			KA157			850
			KAF157			910

$M_{a\,max}$ = 20000 Nm

n_a min^{-1}	i	F_{Ra} N	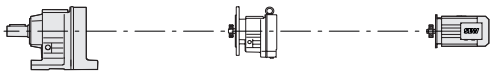			m kg
4.9	299	111100	**K157**	**R107**	**DRN160L4**	950
5.1	291	111100	**KF157**			1030
5.8	253	111100	**KA157**			920
6.4	230	111100	**KAF157**			980
6.9	213	111100	**K157**	**R107**	**DRN180M4**	980
7.9	187	111100	**KF157**			1050
			KA157			940
			KAF157			1000
9.4	157	111000	**K157**	**R107**	**DRN180L4**	990
			KF157			1070
			KA157			950
			KAF157			1010
12	122	99700	**K157**	**R107**	**DRN200L4**	1100
			KF157			1180
			KA157			1060
			KAF157			1120
14	107	94000	**K157**	**R107**	**DRN225S4**	1130
			KF157			1210
			KA157			1090
			KAF157			1150

$M_{a\,max}$ = 35000 Nm

n_a min^{-1}	i	F_{Ra} N	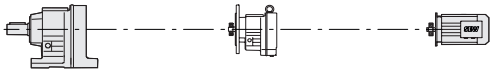			m kg
0.07	19723	150000	**K167**	**R97**	**DRN71M4**	1180
			KH167			1150
0.08	17406	150000	**K167**	**R97**	**DRN80MK4**	
0.1	15000	150000				1190
0.11	13238	150000	**KH167**			1150
0.12	11573	150000				
0.14	10264	150000	**K167**	**R97**	**DRN80M4**	1190
0.17	8628	150000	**KH167**			1150
0.22	6562	150000	**K167**	**R97**	**DRN90S4**	1190
			KH167			1160
0.27	5355	150000	**K167**	**R97**	**DRN90L4**	1200
0.31	4788	150000	**KH167**			1160
0.36	4079	150000				
0.43	3376	150000	**K167**	**R97**	**DRN100LS4**	1200
0.53	2755	150000	**KH167**			1160
0.64	2263	150000	**K167**	**R97**	**DRN100L4**	1210
			KH167			1170
0.67	2182	150000	**K167**	**R97**	**DRN100L4**	1210
			KH167			1170
0.86	1704	150000	**K167**	**R97**	**DRN112M4**	1210
			KH167			1180
1	1408	150000	**K167**	**R97**	**DRN132S4**	1230
1.1	1296	150000	**KH167**			1190
1.3	1101	150000				
1.6	944	150000	**K167**	**R97**	**DRN132M4**	1240
1.7	843	150000	**KH167**			1210
1.9	757	150000	**K167**	**R97**	**DRN132L4**	1250
			KH167			1210
2.3	632	150000	**K167**	**R97**	**DRN160M4**	1290
2.6	561	150000	**KH167**			1250

$M_{a\,max}$ = 35000 Nm

n_a min^{-1}	i	F_{Ra} N	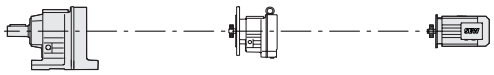			m kg
3.1	481	150000	**K167**	**R97**	**DRN160L4**	1300
3.5	423	150000	**KH167**			1260
4	369	150000	**K167**	**R97**	**DRN180M4**	1320
4.7	318	150000	**KH167**			1280
5.3	278	150000	**K167**	**R107**	**DRN180L4**	1380
			KH167			1350
6.1	244	150000	**K167**	**R107**	**DRN200L4**	1490
6.9	213	150000	**KH167**			1460
7.2	206	150000				
8.2	180	150000	**K167**	**R107**	**DRN225S4**	1530
9.3	160	150000	**KH167**			1490
11	135	150000	**K167**	**R107**	**DRN225M4**	1530
			KH167			1490

$M_{a\,max}$ = 53000 Nm

n_a min^{-1}	i	F_{Ra} N	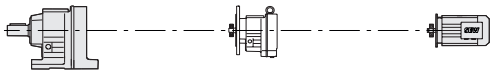			m kg
0.04	32625	190000	**K187**	**R97**	**DRN71M4**	1770
0.05	27165	190000	**KH187**			1700
0.06	24353	190000	**K187**	**R97**	**DRN80MK4**	1770
0.07	19144	190000	**KH187**			1700
0.08	16978	190000	**K187**	**R97**	**DRN80M4**	1770
0.1	14272	190000	**KH187**			1700
0.11	13116	190000				
0.12	11647	190000	**K187**	**R97**	**DRN90S4**	1780
0.14	10413	190000	**KH187**			1710
0.16	9363	190000				
0.18	8126	190000	**K187**	**R97**	**DRN90L4**	1780
0.2	7343	190000	**KH187**			1710
0.22	6747	190000				
0.24	5991	190000	**K187**	**R97**	**DRN100LS4**	1780
0.27	5358	190000	**KH187**			1720
0.3	4817	190000				
0.33	4370	190000				
0.4	3609	190000	**K187**	**R97**	**DRN100L4**	1790
0.48	3062	190000	**KH187**			1720
0.52	2818	190000	**K187**	**R97**	**DRN112M4**	1800
			KH187			1730
0.58	2519	190000	**K187**	**R97**	**DRN112M4**	1800
0.65	2268	190000	**KH187**			1730
0.71	2054	190000	**K187**	**R97**	**DRN132S4**	1810
0.8	1821	190000	**KH187**			1740
0.91	1605	190000	**K187**	**R97**	**DRN132M4**	1830
1.1	1395	190000	**KH187**			1760
1.2	1196	190000				
1.4	1046	190000	**K187**	**R97**	**DRN132L4**	1830
			KH187			1770
1.6	945	190000	**K187**	**R97**	**DRN160M4**	1870
1.8	835	190000	**KH187**			1800
2	729	190000				
2	738	190000	**K187**	**R107**	**DRN160L4**	1930
2.4	621	190000	**KH187**			1860
2.4	622	190000				
2.8	520	190000	**K187**	**R107**	**DRN180M4**	1950
2.8	527	190000	**KH187**			1880

$M_{a\,max}$ = 53000 Nm

n_a min^{-1}	i	F_{Ra} N	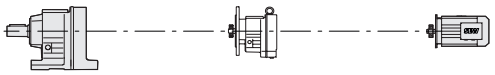			m kg
3.3	454	190000	**K187** **KH187**	**R107**	**DRN180L4**	1970 1900
4.2	355	190000	**K187** **KH187**	**R107**	**DRN200L4**	2080 2010
5.7	261	190000	**K187** **KH187**	**R107**	**DRN225S4**	2110 2040
6.7	221	190000	**K187** **KH187**	**R107**	**DRN225M4**	2110 2040

4.4.4 Dimension sheets K..DRN..

33 008 01 15

K19..

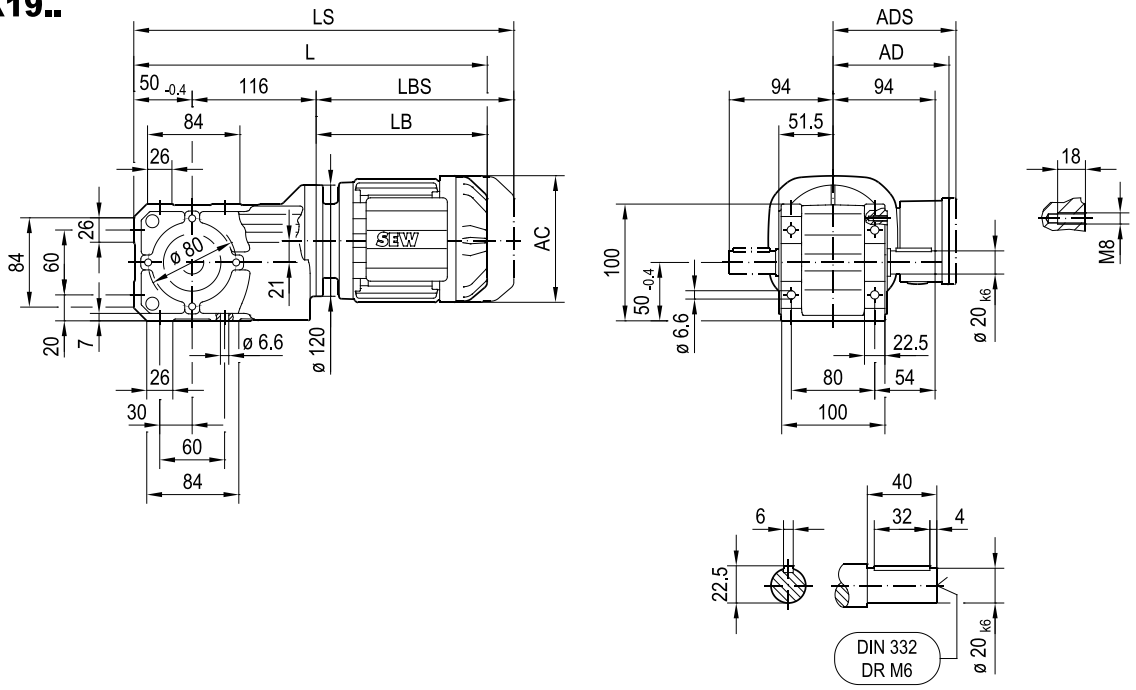

KA19B..

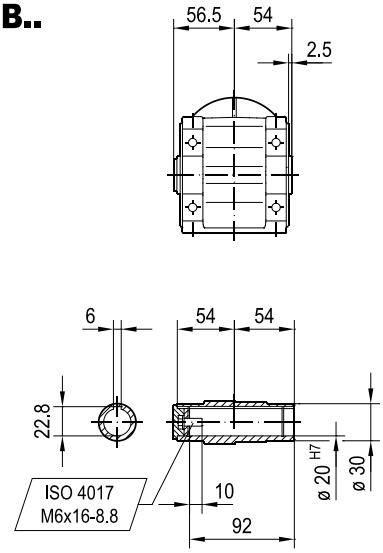

KH19B..

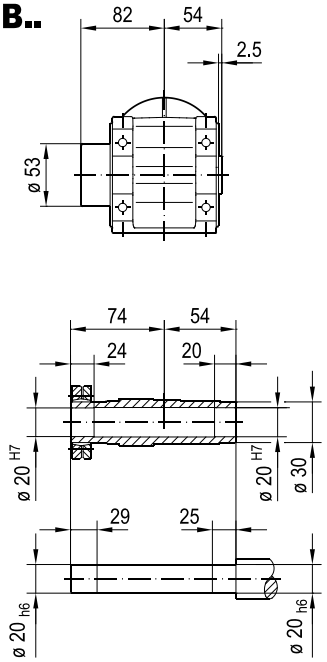

(→ 📖 4.1)	DRN							
	63MS	63M	71MS	71M	80MK	80MS	80M	90S
AC	115	115	139	139	156	156	156	179
AD	98	98	118	118	128	128	128	140
ADS	98	98	129	129	139	139	139	150
L	356	370	372	392	403	420	449	450
LS	412	426	439	459	484	501	530	544
LB	190	204	206	226	237	254	283	284
LBS	246	260	273	293	318	335	364	378

33 009 00 15

KF19B..

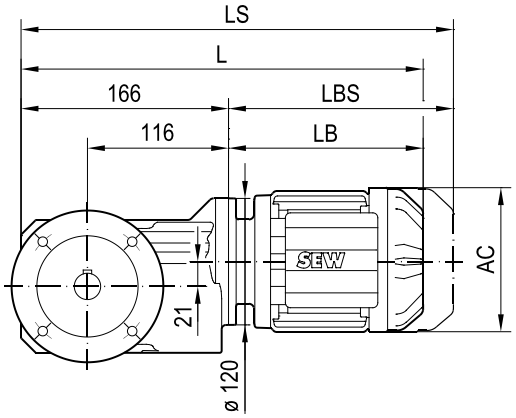

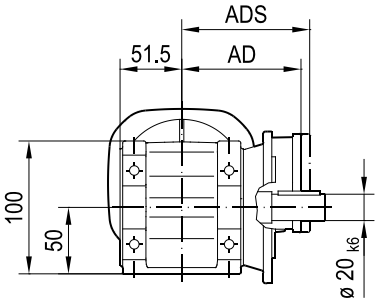

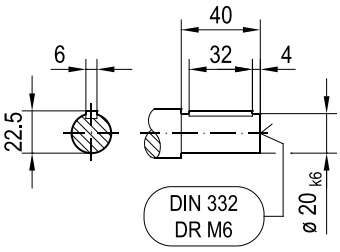

ø 120
max. DR71M

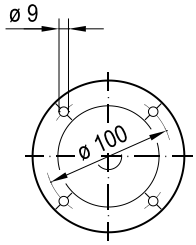

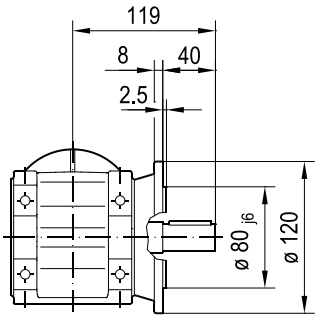

ø 160

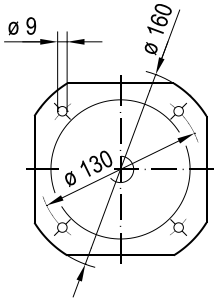

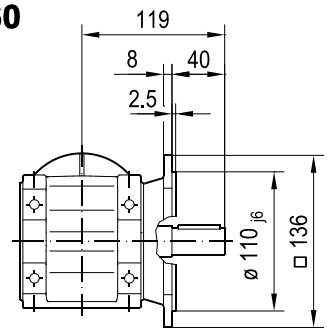

KAF19B..

ø 120
max. DR71M

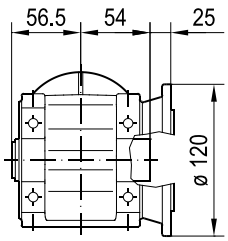

ø 160

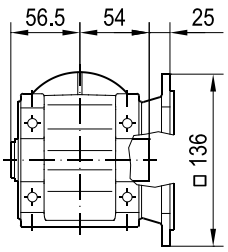

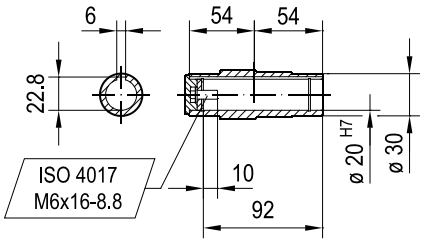

(→ 📖 4.1)	DRN							
	63MS	63M	71MS	71M	80MK	80MS	80M	90S
AC	115	115	139	139	156	156	156	179
AD	98	98	118	118	128	128	128	140
ADS	98	98	129	129	139	139	139	150
L	356	370	372	392	403	420	449	450
LS	412	426	439	459	484	501	530	544
LB	190	204	206	226	237	254	283	284
LBS	246	260	273	293	318	335	364	378

KHF19B..

33 010 01 15

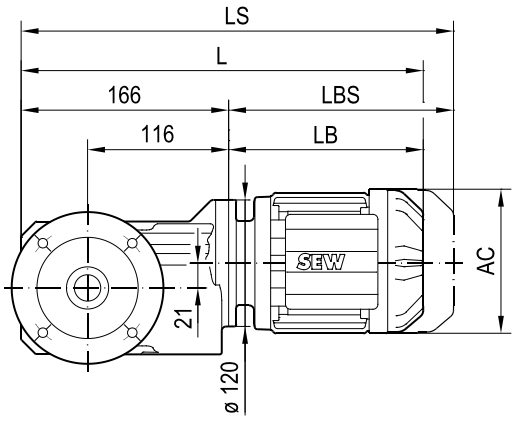

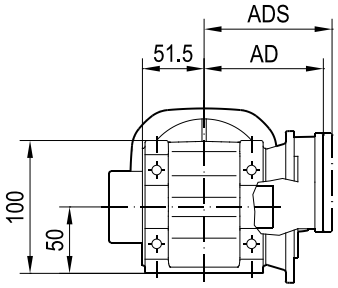

ø 120
max. DR71M

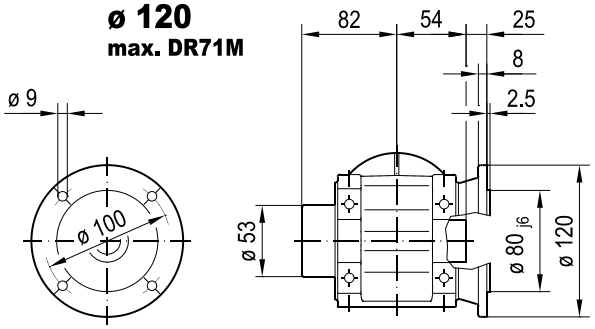

ø 160

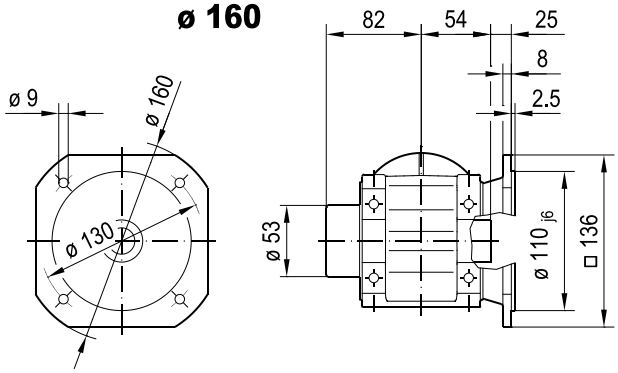

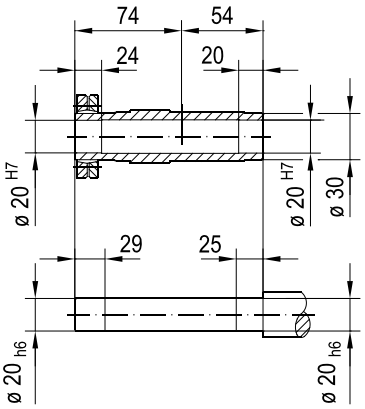

(→ 📖 4.1)	DRN							
	63MS	63M	71MS	71M	80MK	80MS	80M	90S
AC	115	115	139	139	156	156	156	179
AD	98	98	118	118	128	128	128	140
ADS	98	98	129	129	139	139	139	150
L	356	370	372	392	403	420	449	450
LS	412	426	439	459	484	501	530	544
LB	190	204	206	226	237	254	283	284
LBS	246	260	273	293	318	335	364	378

33 011 00 15

KF19..

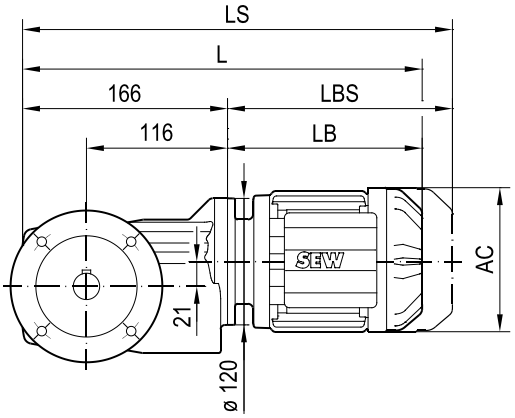

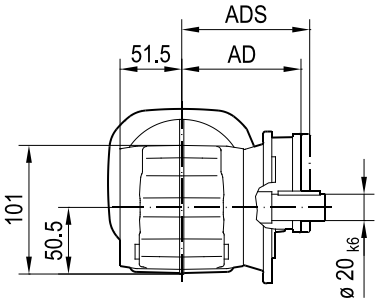

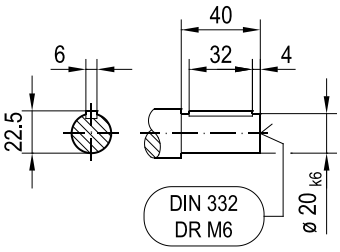

ø 120
max. DR71M

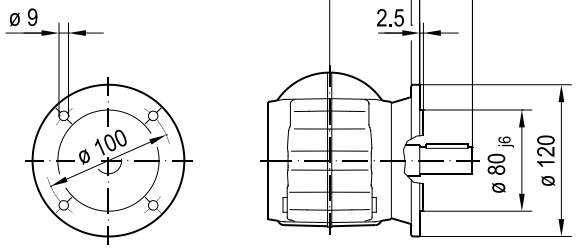

ø 160

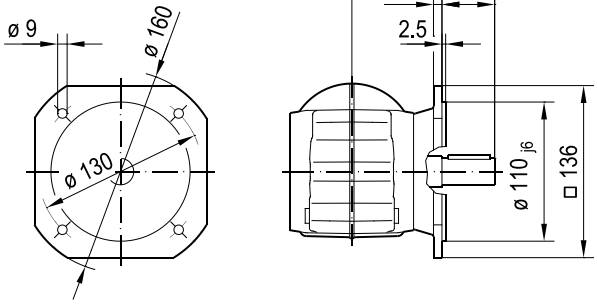

KAF19..

ø 120
max. DR71M

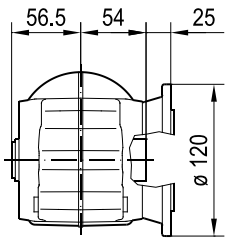

ø 160

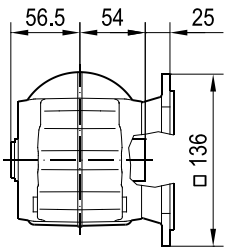

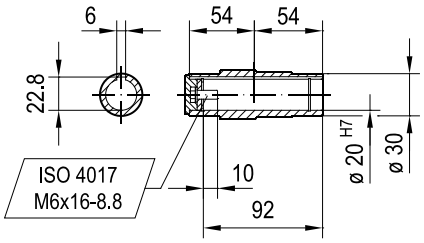

(→ 📖 4.1)	DRN							
	63MS	63M	71MS	71M	80MK	80MS	80M	90S
AC	115	115	139	139	156	156	156	179
AD	98	98	118	118	128	128	128	140
ADS	98	98	129	129	139	139	139	150
L	356	370	372	392	403	420	449	450
LS	412	426	439	459	484	501	530	544
LB	190	204	206	226	237	254	283	284
LBS	246	260	273	293	318	335	364	378

KHF19..

33 013 01 15

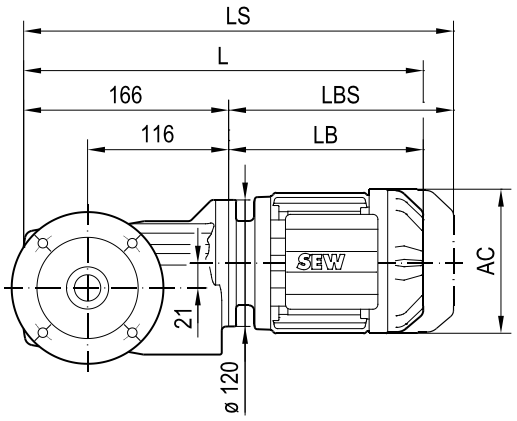

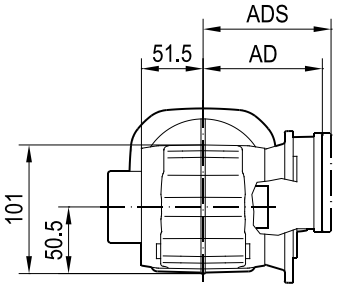

ø 120
max. DR71M

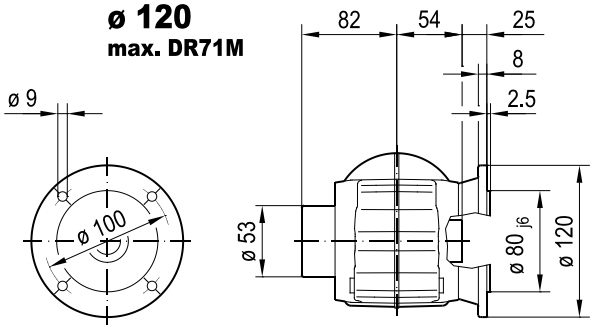

ø 160

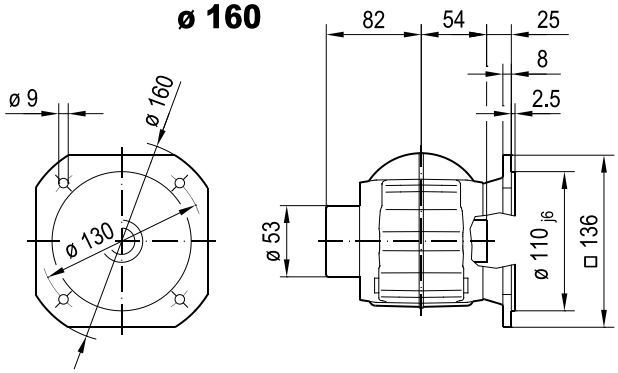

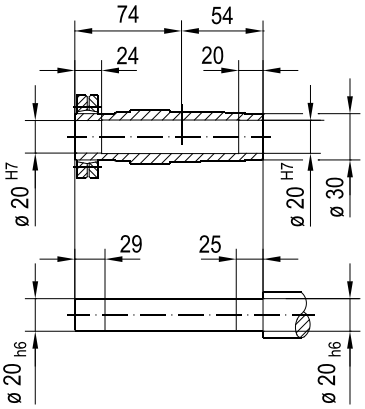

(→ 📖 4.1)	DRN							
	63MS	63M	71MS	71M	80MK	80MS	80M	90S
AC	115	115	139	139	156	156	156	179
AD	98	98	118	118	128	128	128	140
ADS	98	98	129	129	139	139	139	150
L	356	370	372	392	403	420	449	450
LS	412	426	439	459	484	501	530	544
LB	190	204	206	226	237	254	283	284
LBS	246	260	273	293	318	335	364	378

33 014 01 15

KA19..

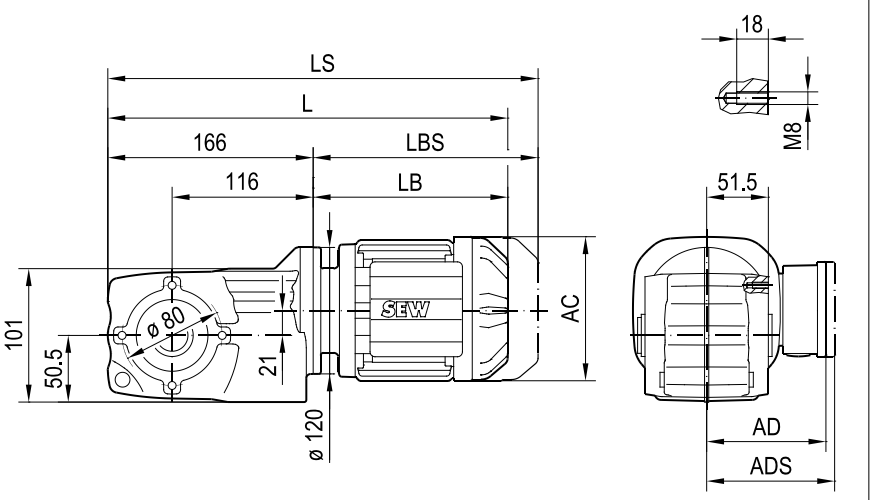

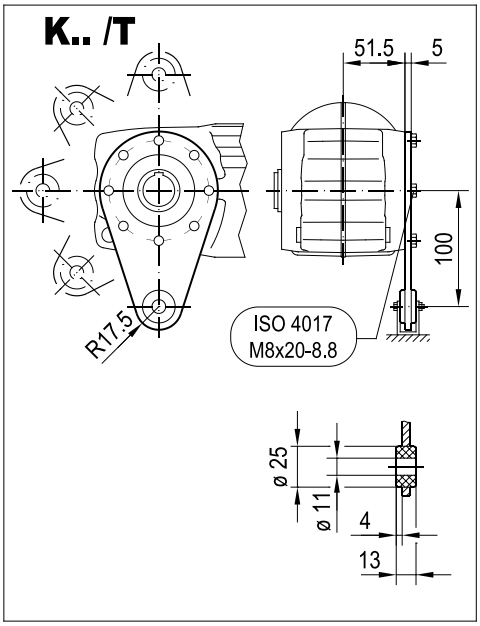

KA19..

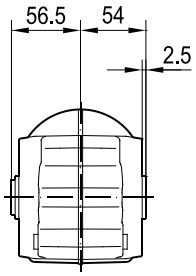

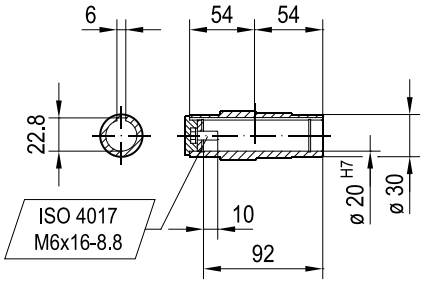

KH19..

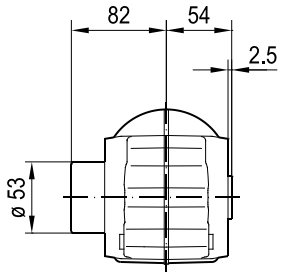

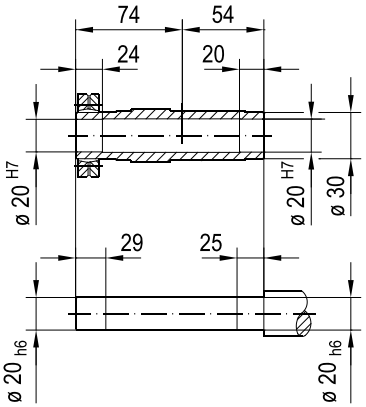

(→ 📖 4.1)	DRN							
	63MS	63M	71MS	71M	80MK	80MS	80M	90S
AC	115	115	139	139	156	156	156	179
AD	98	98	118	118	128	128	128	140
ADS	98	98	129	129	139	139	139	150
L	356	370	372	392	403	420	449	450
LS	412	426	439	459	484	501	530	544
LB	190	204	206	226	237	254	283	284
LBS	246	260	273	293	318	335	364	378

KT19..

33 104 01 21

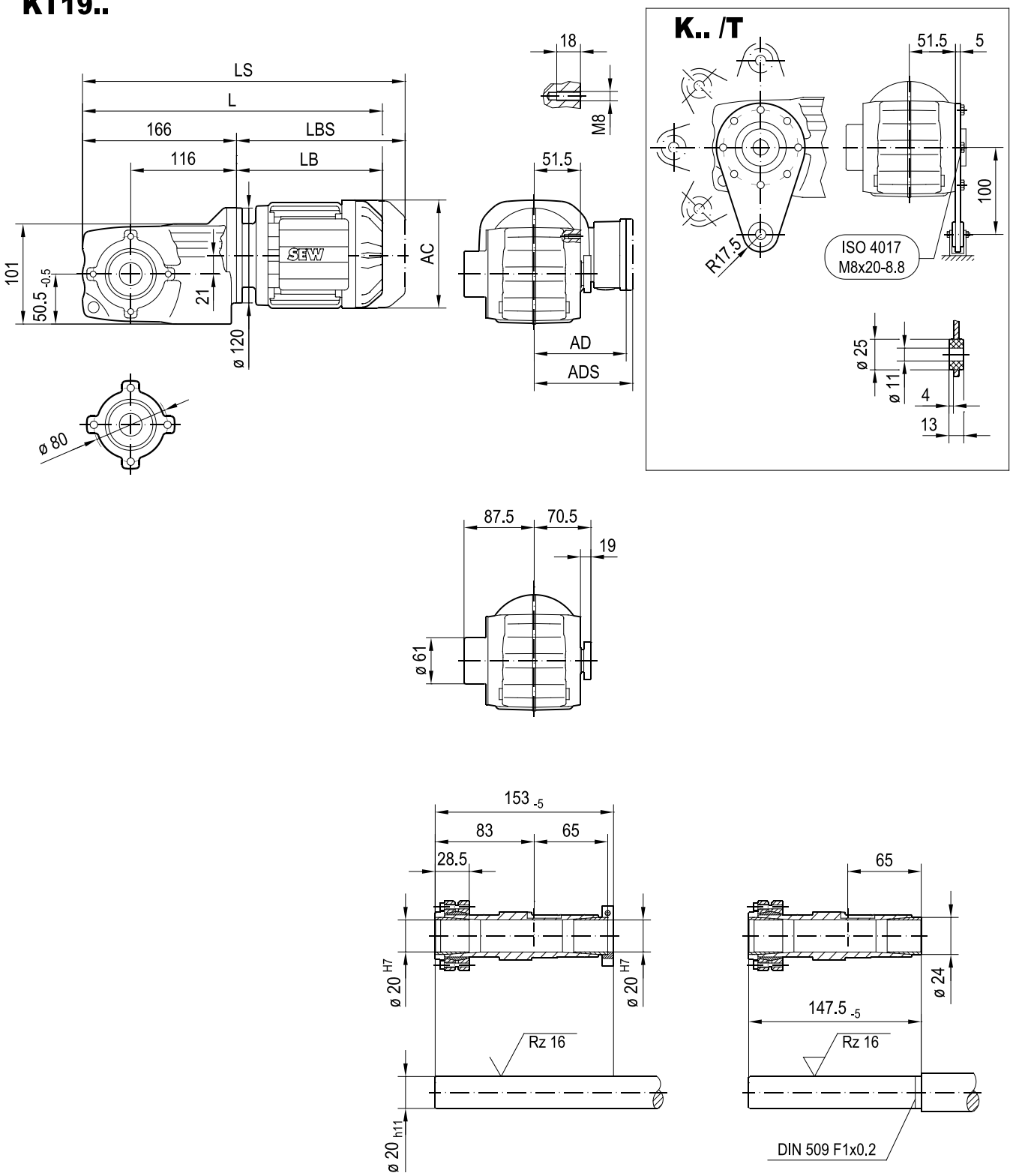

(→ 📖 4.1)	DRN							
	63MS	63M	71MS	71M	80MK	80MS	80M	90S
AC	115	115	139	139	156	156	156	179
AD	98	98	118	118	128	128	128	140
ADS	98	98	129	129	139	139	139	150
L	356	370	372	392	403	420	449	450
LS	412	426	439	459	484	501	530	544
LB	190	204	206	226	237	254	283	284
LBS	246	260	273	293	318	335	364	378

K29..

33 015 01 15

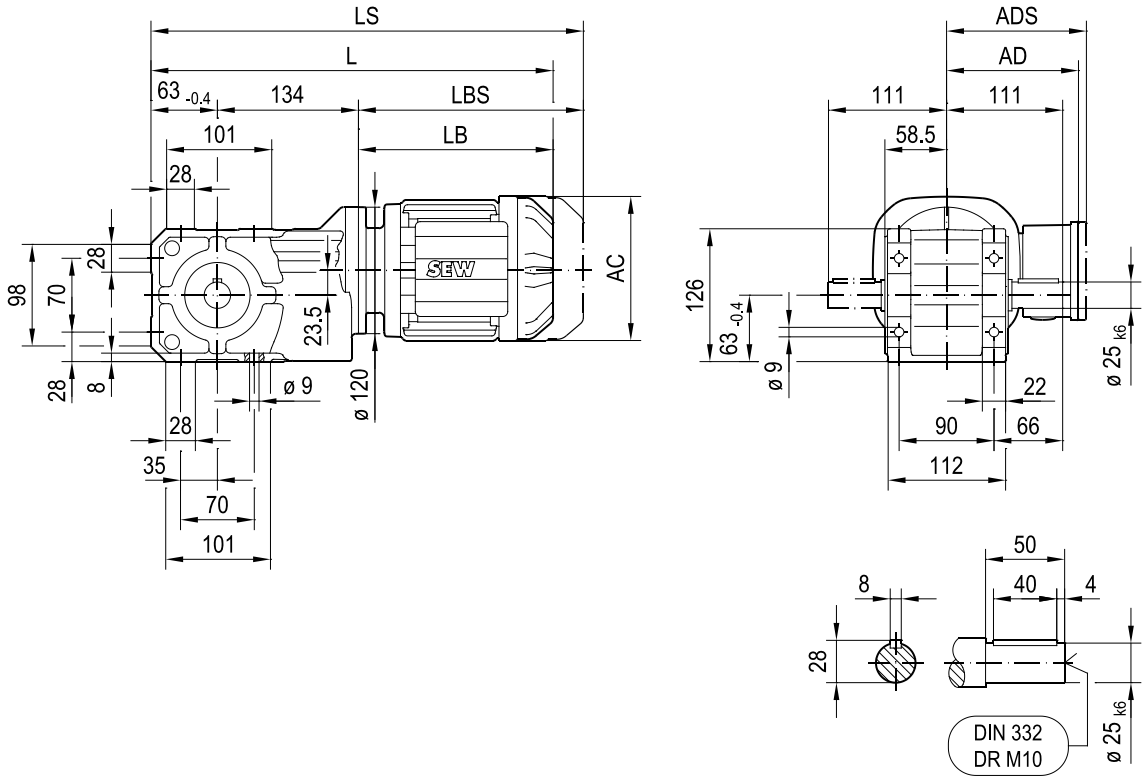

(→ 📖 4.1)	DRN										
	63MS	63M	71MS	71M	80MK	80MS	80M	90S	90L	100LS	100L/LM
AC	115	115	139	139	156	156	156	179	179	197	197
AD	98	98	118	118	128	128	128	140	140	157	157
ADS	98	98	129	129	139	139	139	150	150	158	158
L	387	401	403	423	434	451	480	481	513	511	561
LS	443	457	470	490	515	532	561	575	607	605	655
LB	190	204	206	226	237	254	283	284	316	314	364
LBS	246	260	273	293	318	335	364	378	410	408	458

KA29B..

33 364 01 15

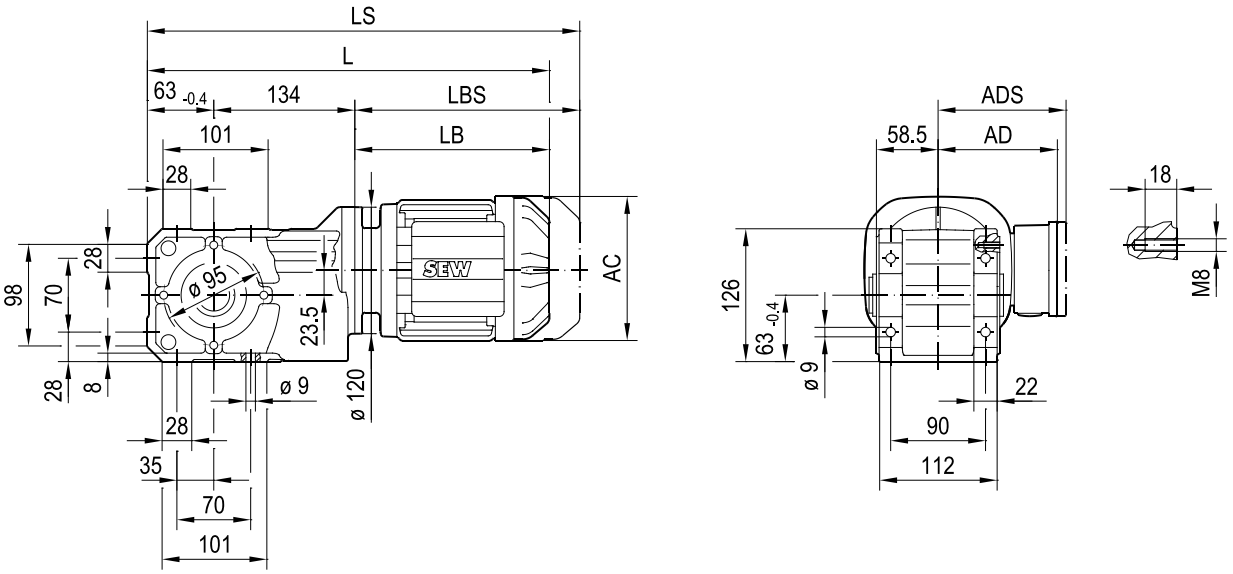

KA29B..

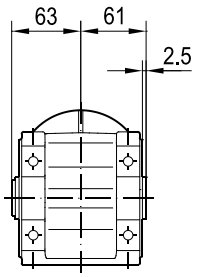

ø 30 H7
DIN 6885-3

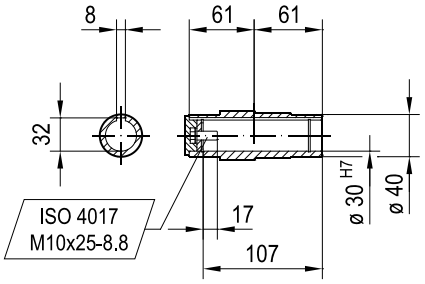

ø 25 H7

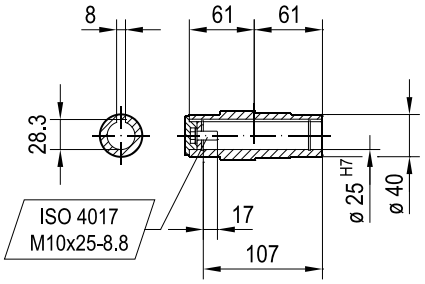

KH29B..

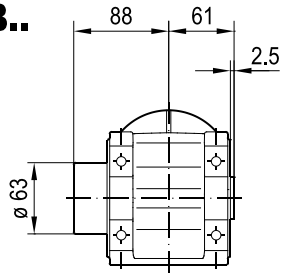

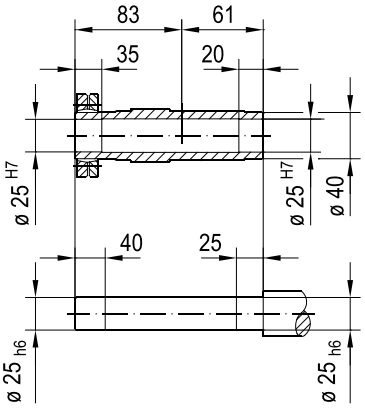

(→ 📖 4.1)	DRN										
	63MS	63M	71MS	71M	80MK	80MS	80M	90S	90L	100LS	100L/LM
AC	115	115	139	139	156	156	156	179	179	197	197
AD	98	98	118	118	128	128	128	140	140	157	157
ADS	98	98	129	129	139	139	139	150	150	158	158
L	387	401	403	423	434	451	480	481	513	511	561
LS	443	457	470	490	515	532	561	575	607	605	655
LB	190	204	206	226	237	254	283	284	316	314	364
LBS	246	260	273	293	318	335	364	378	410	408	458

33 016 00 15

KF29B..

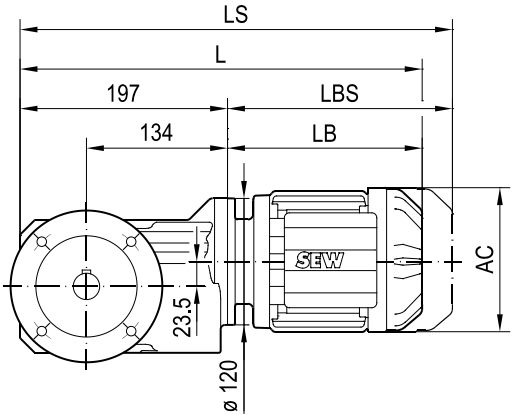

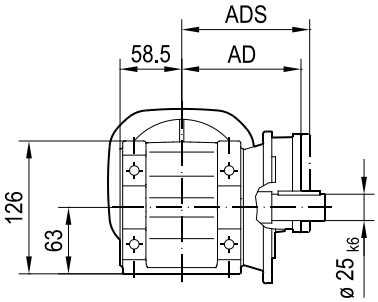

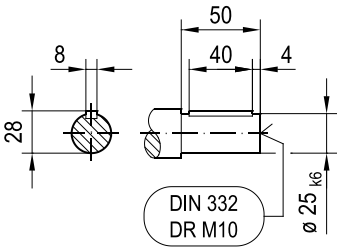

ø 160

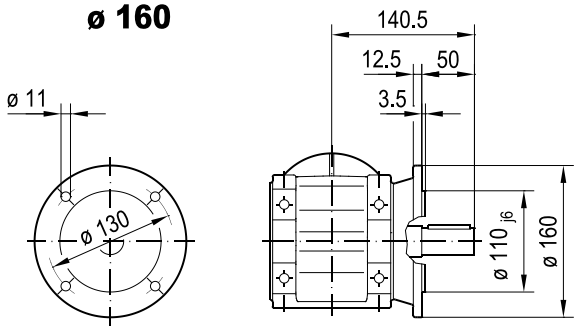

ø 200

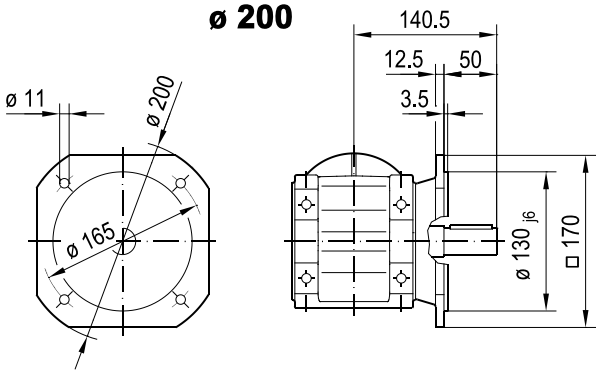

KAF29B..

ø 160

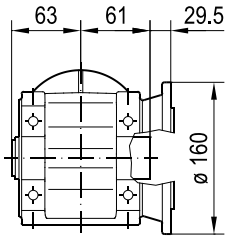

ø 200

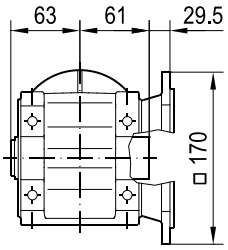

ø 30 H7
DIN 6885-3

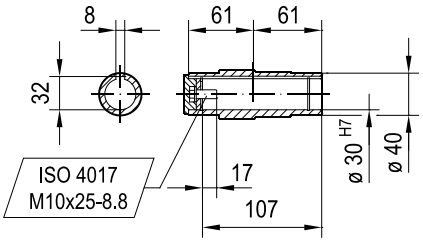

ø 25 H7

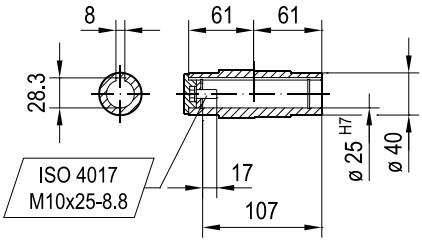

(→ 📖 4.1)	DRN										
	63MS	63M	71MS	71M	80MK	80MS	80M	90S	90L	100LS	100L/LM
AC	115	115	139	139	156	156	156	179	179	197	197
AD	98	98	118	118	128	128	128	140	140	157	157
ADS	98	98	129	129	139	139	139	150	150	158	158
L	387	401	403	423	434	451	480	481	513	511	561
LS	443	457	470	490	515	532	561	575	607	605	655
LB	190	204	206	226	237	254	283	284	316	314	364
LBS	246	260	273	293	318	335	364	378	410	408	458

KHF29B..

33 017 01 15

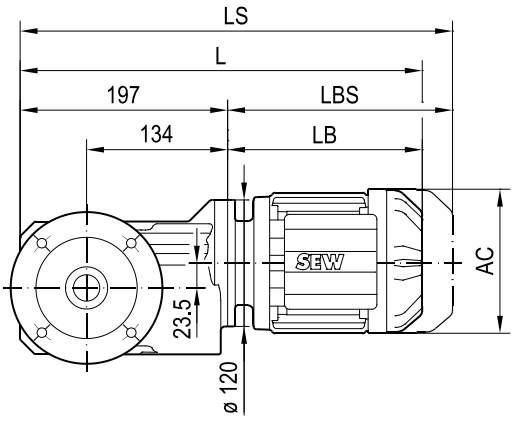

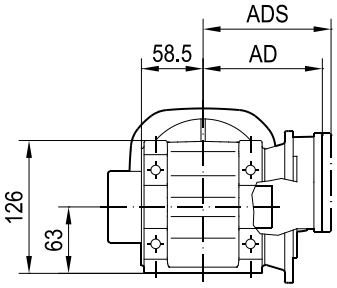

ø 160

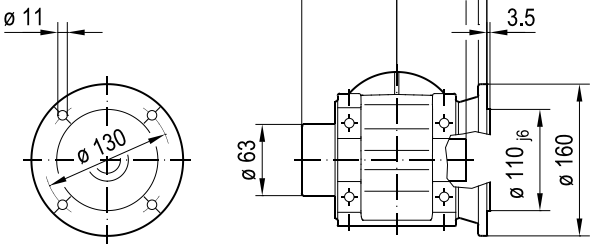

ø 200

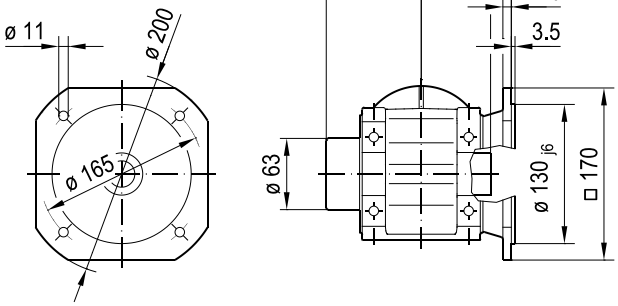

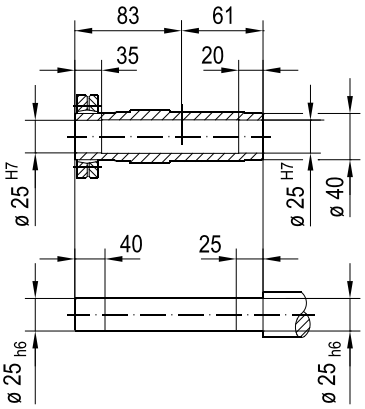

(→ 📖 4.1)	DRN										
	63MS	63M	71MS	71M	80MK	80MS	80M	90S	90L	100LS	100L/LM
AC	115	115	139	139	156	156	156	179	179	197	197
AD	98	98	118	118	128	128	128	140	140	157	157
ADS	98	98	129	129	139	139	139	150	150	158	158
L	387	401	403	423	434	451	480	481	513	511	561
LS	443	457	470	490	515	532	561	575	607	605	655
LB	190	204	206	226	237	254	283	284	316	314	364
LBS	246	260	273	293	318	335	364	378	410	408	458

33 018 00 15

KF29..

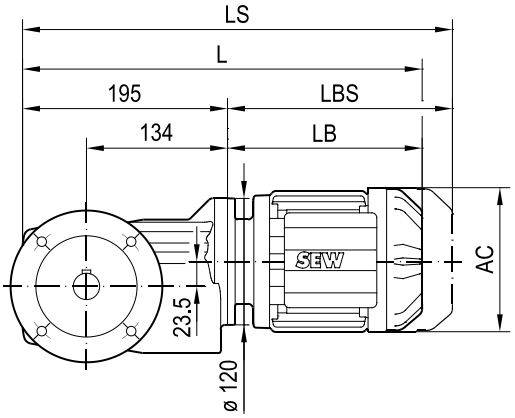

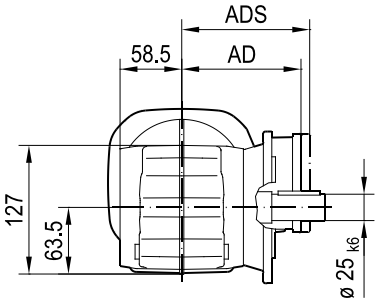

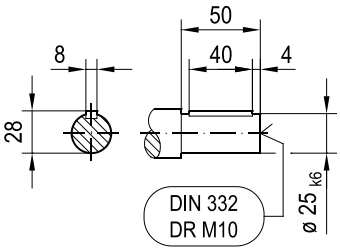

ø 160

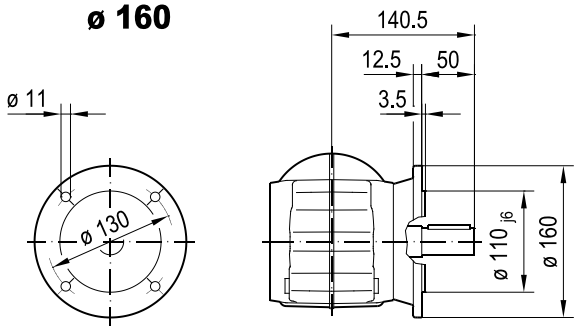

ø 200

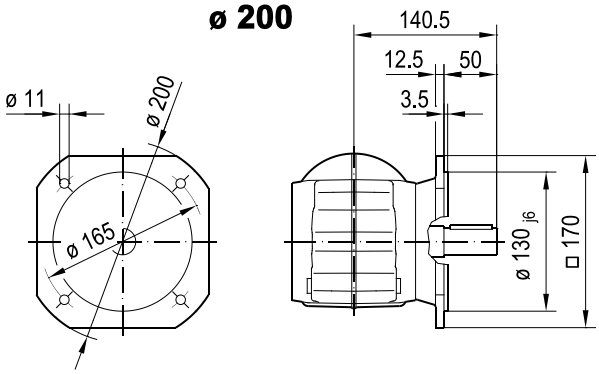

KAF29..

ø 160

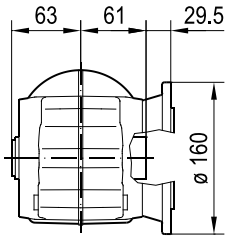

ø 200

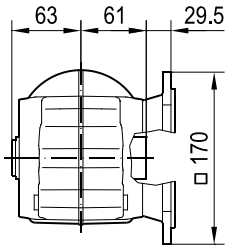

ø 30 H7
DIN 6885-3

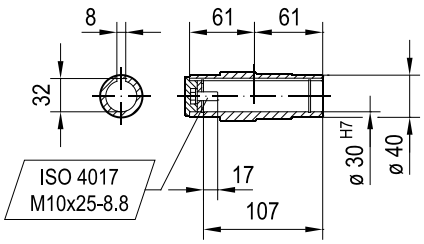

ø 25 H7

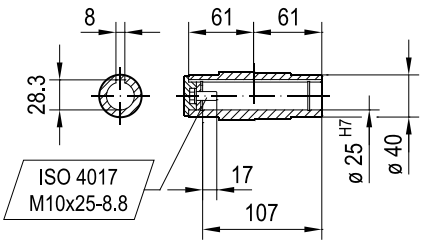

(→ 📖 4.1)	DRN										
	63MS	63M	71MS	71M	80MK	80MS	80M	90S	90L	100LS	100L/LM
AC	115	115	139	139	156	156	156	179	179	197	197
AD	98	98	118	118	128	128	128	140	140	157	157
ADS	98	98	129	129	139	139	139	150	150	158	158
L	385	399	401	421	432	449	478	479	511	509	559
LS	441	455	468	488	513	530	559	573	605	603	653
LB	190	204	206	226	237	254	283	284	316	314	364
LBS	246	260	273	293	318	335	364	378	410	408	458

KHF29..

33 019 01 15

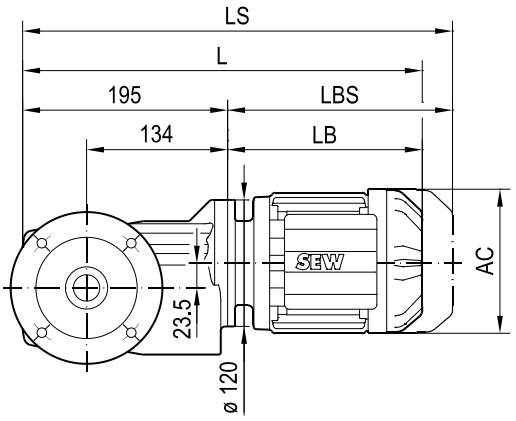

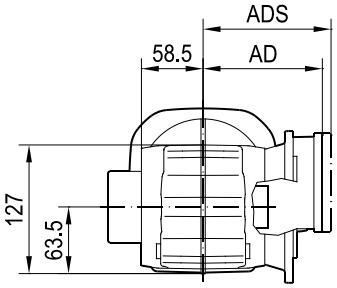

ø 160

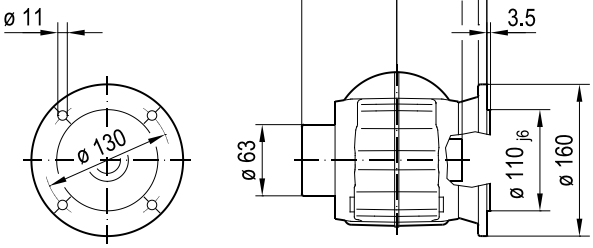

ø 200

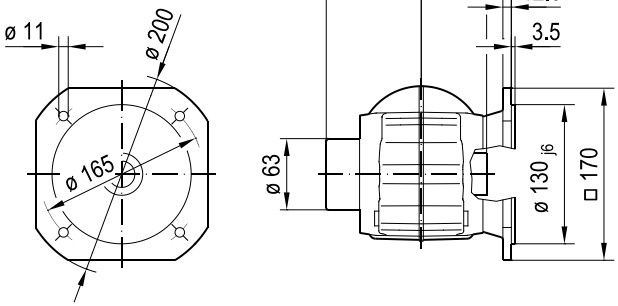

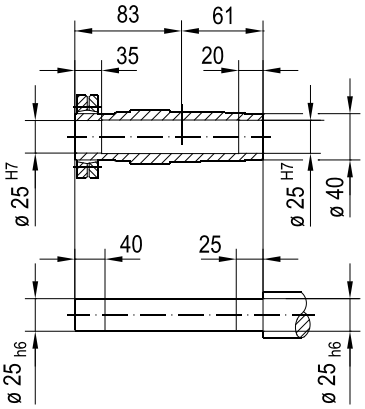

(→ 📖 4.1)	DRN										
	63MS	63M	71MS	71M	80MK	80MS	80M	90S	90L	100LS	100L/LM
AC	115	115	139	139	156	156	156	179	179	197	197
AD	98	98	118	118	128	128	128	140	140	157	157
ADS	98	98	129	129	139	139	139	150	150	158	158
L	385	399	401	421	432	449	478	479	511	509	559
LS	441	455	468	488	513	530	559	573	605	603	653
LB	190	204	206	226	237	254	283	284	316	314	364
LBS	246	260	273	293	318	335	364	378	410	408	458

33 020 02 15

KA29..

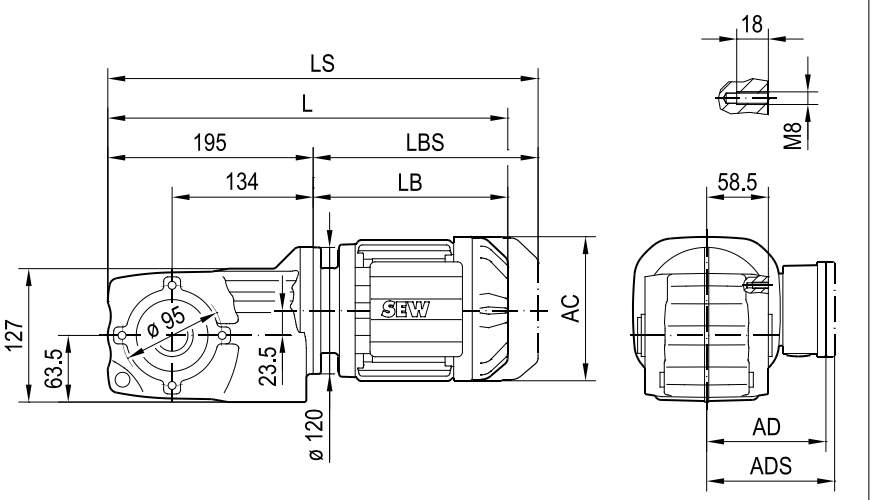

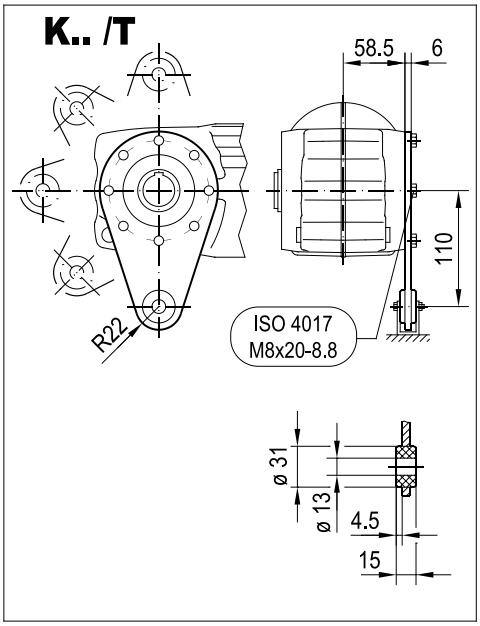

KA29..

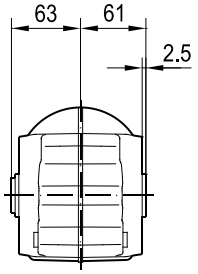

ø 30 H7
DIN 6885-3

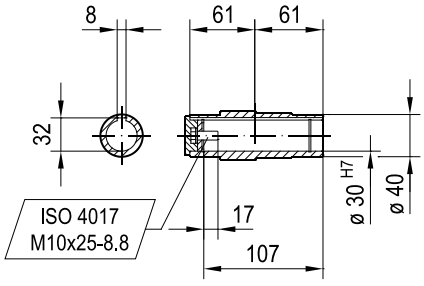

ø 25 H7

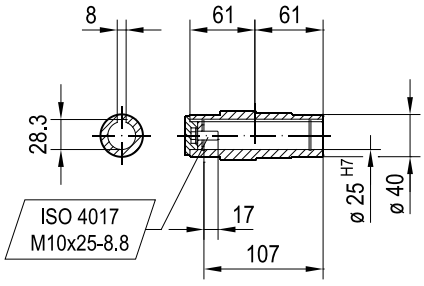

KH29..

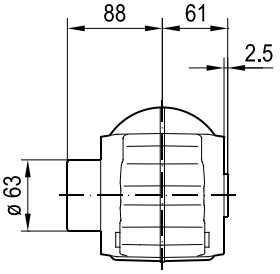

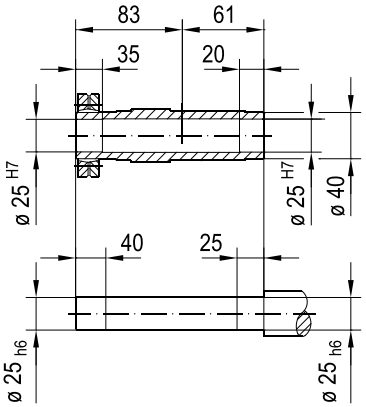

(→ 📖 4.1)	DRN										
	63MS	63M	71MS	71M	80MK	80MS	80M	90S	90L	100LS	100L/LM
AC	115	115	139	139	156	156	156	179	179	197	197
AD	98	98	118	118	128	128	128	140	140	157	157
ADS	98	98	129	129	139	139	139	150	150	158	158
L	385	399	401	421	432	449	478	479	511	509	559
LS	441	455	468	488	513	530	559	573	605	603	653
LB	190	204	206	226	237	254	283	284	316	314	364
LBS	246	260	273	293	318	335	364	378	410	408	458

KT29..

33 105 02 21

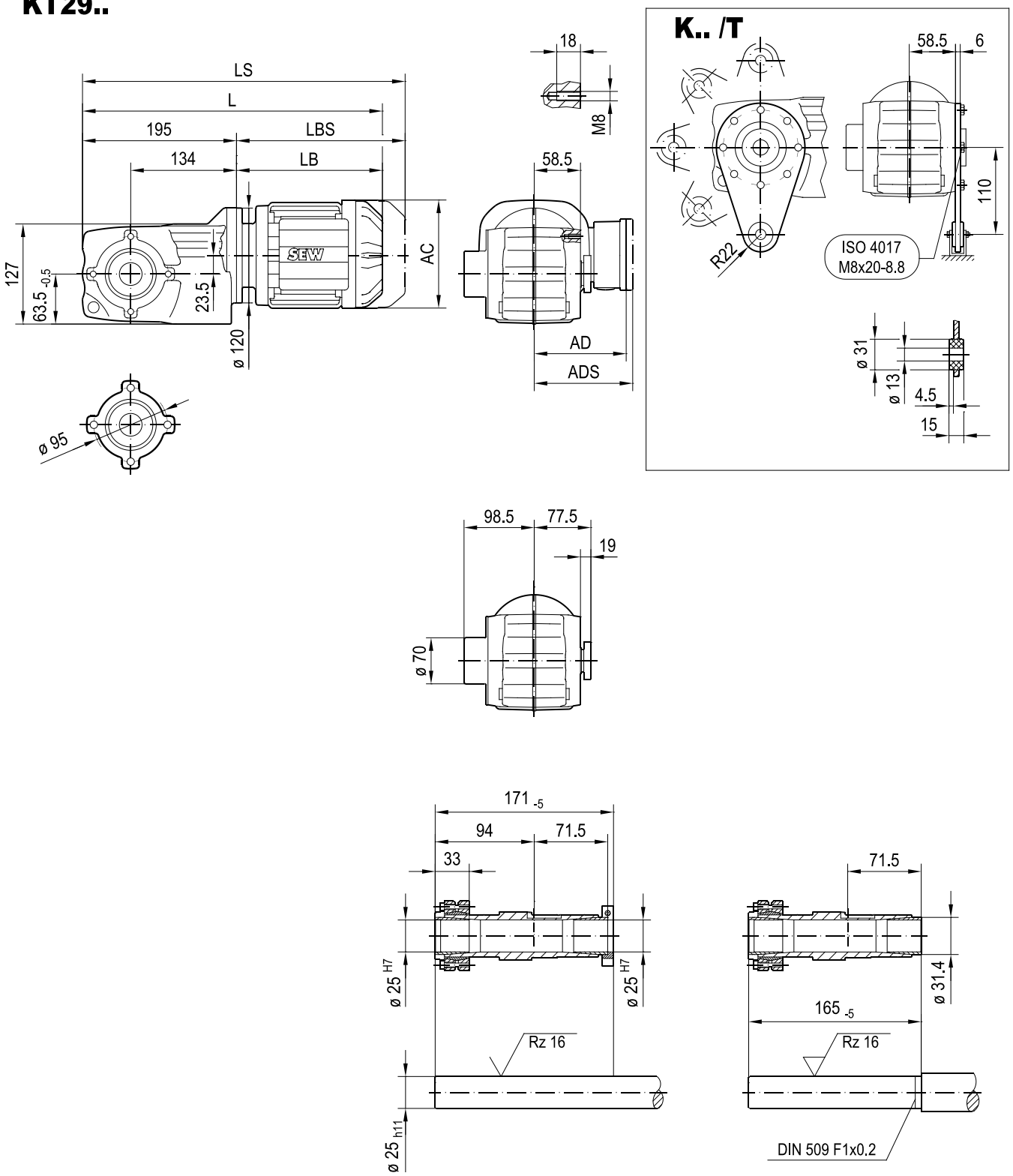

(→ 📖 4.1)	DRN										
	63MS	63M	71MS	71M	80MK	80MS	80M	90S	90L	100LS	100L/LM
AC	115	115	139	139	156	156	156	179	179	197	197
AD	98	98	118	118	128	128	128	140	140	157	157
ADS	98	98	129	129	139	139	139	150	150	158	158
L	385	399	401	421	432	449	478	479	511	509	559
LS	441	455	468	488	513	530	559	573	605	603	653
LB	190	204	206	226	237	254	283	284	316	314	364
LBS	246	260	273	293	318	335	364	378	410	408	458

33 037 00 14

K37..

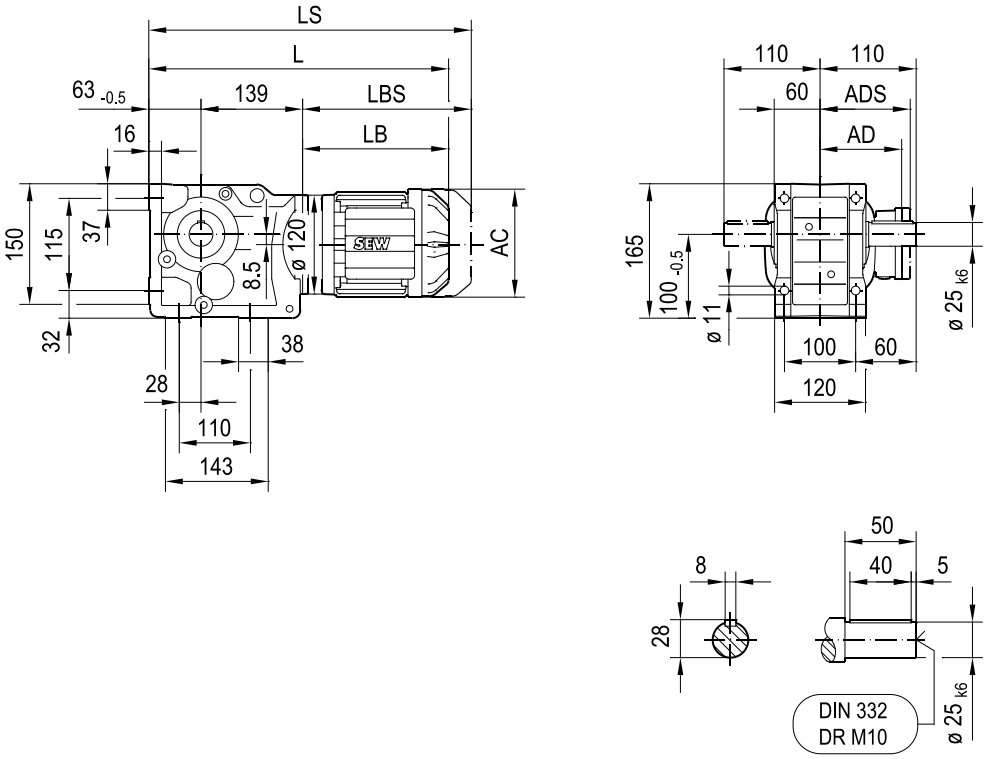

(→ 📖 4.1)	DRN										
	63MS	63M	71MS	71M	80MK	80MS	80M	90S	90L	100LS	100L/LM
AC	115	115	139	139	156	156	156	179	179	197	197
AD	98	98	118	118	128	128	128	140	140	157	157
ADS	98	98	129	129	139	139	139	150	150	158	158
L	392	406	408	428	439	456	485	486	518	516	566
LS	448	462	475	495	520	537	566	580	612	610	660
LB	190	204	206	226	237	254	283	284	316	314	364
LBS	246	260	273	293	318	335	364	378	410	408	458

33 038 00 14

KF37..

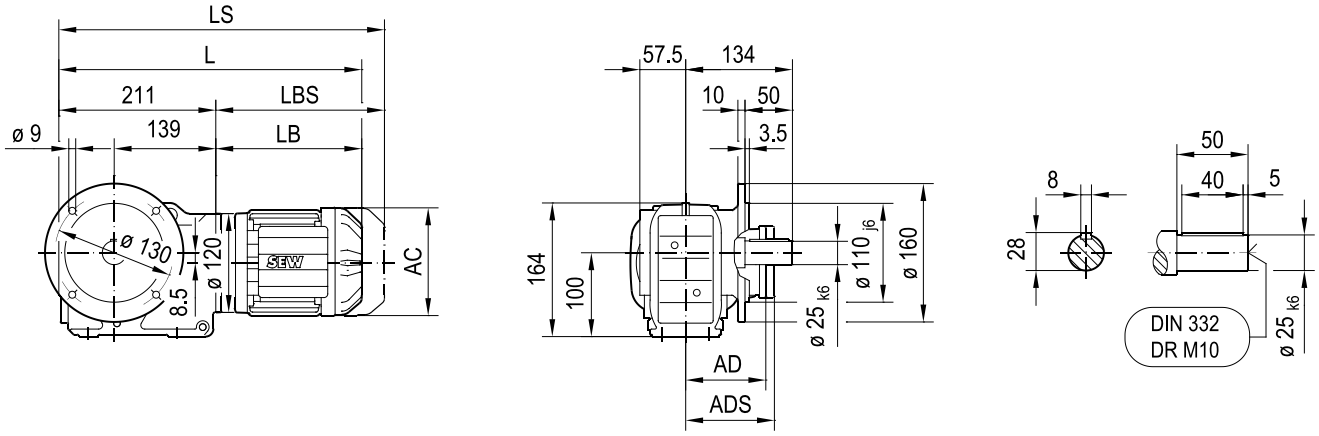

KAF37..

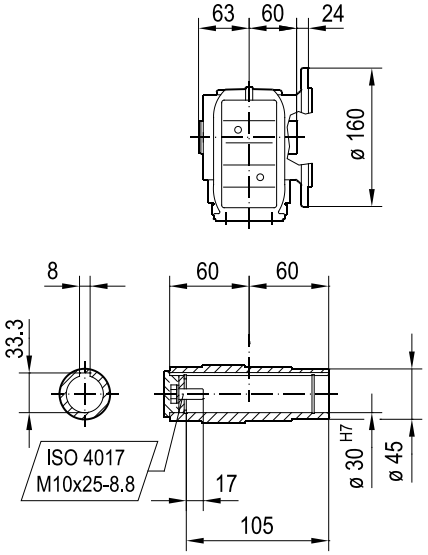

KHF37..

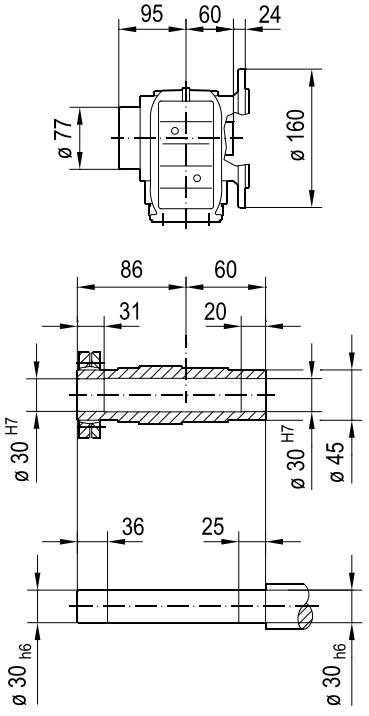

KVF37..

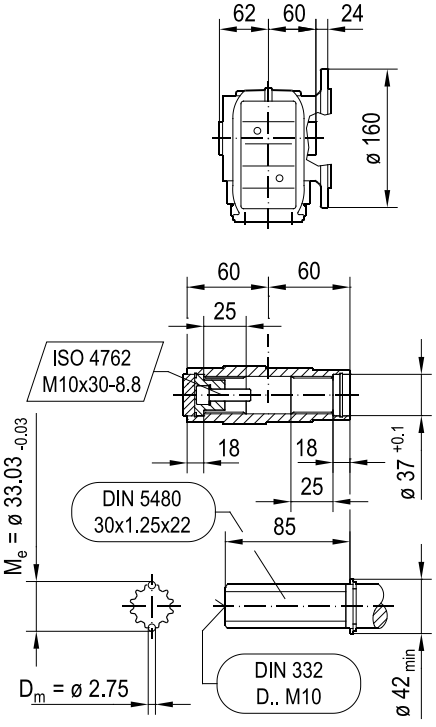

(→ 📖 4.1)	DRN										
	63MS	63M	71MS	71M	80MK	80MS	80M	90S	90L	100LS	100L/LM
AC	115	115	139	139	156	156	156	179	179	197	197
AD	98	98	118	118	128	128	128	140	140	157	157
ADS	98	98	129	129	139	139	139	150	150	158	158
L	401	415	417	437	448	465	494	495	527	525	575
LS	457	471	484	504	529	546	575	589	621	619	669
LB	190	204	206	226	237	254	283	284	316	314	364
LBS	246	260	273	293	318	335	364	378	410	408	458

33 039 00 14

KA37..

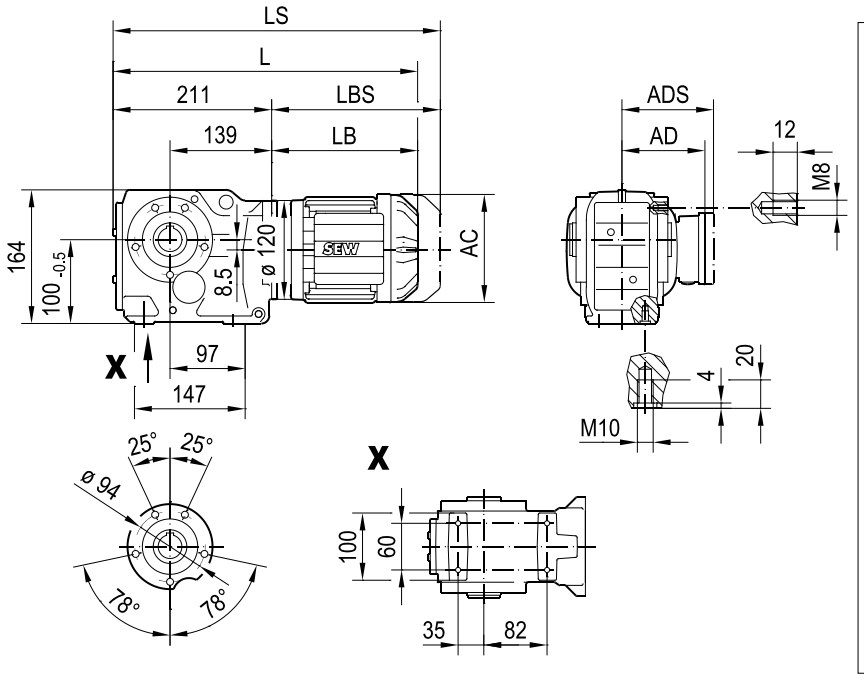

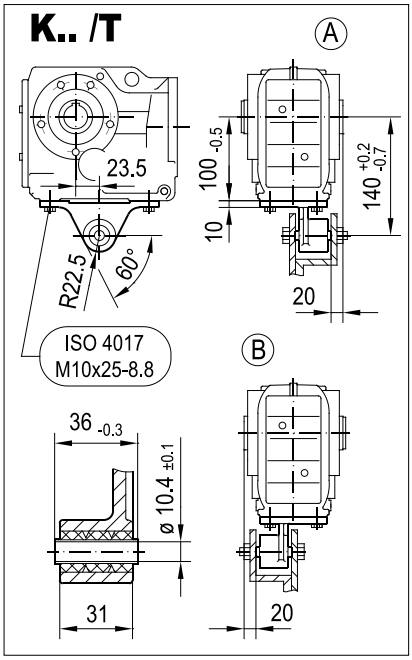

KA37..

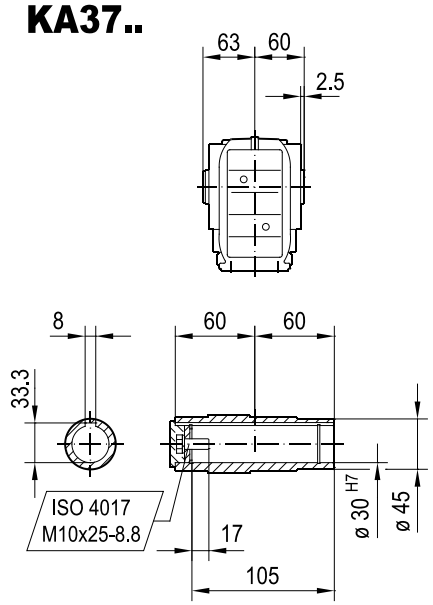

KH37..

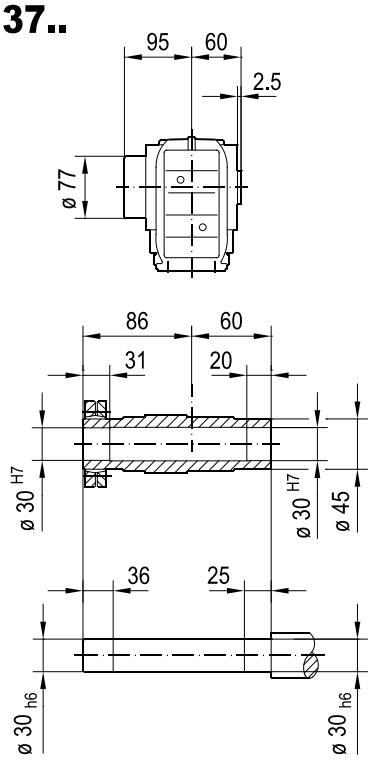

KV37..

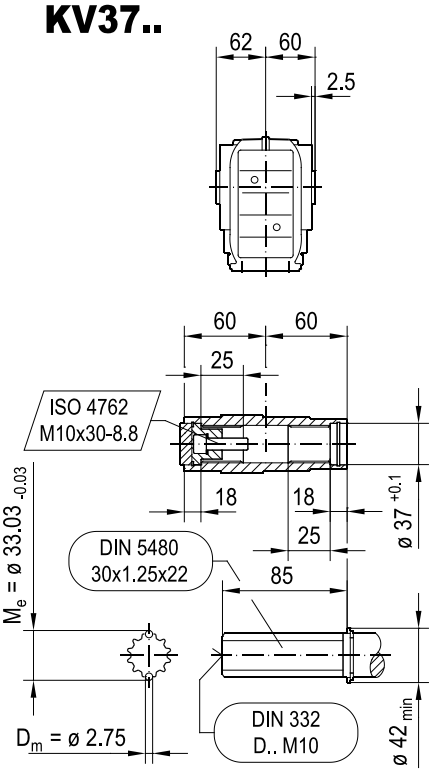

(→ 4.1)	DRN										
	63MS	63M	71MS	71M	80MK	80MS	80M	90S	90L	100LS	100L/LM
AC	115	115	139	139	156	156	156	179	179	197	197
AD	98	98	118	118	128	128	128	140	140	157	157
ADS	98	98	129	129	139	139	139	150	150	158	158
L	401	415	417	437	448	465	494	495	527	525	575
LS	457	471	484	504	529	546	575	589	621	619	669
LB	190	204	206	226	237	254	283	284	316	314	364
LBS	246	260	273	293	318	335	364	378	410	408	458

33 040 00 14

KAZ37..

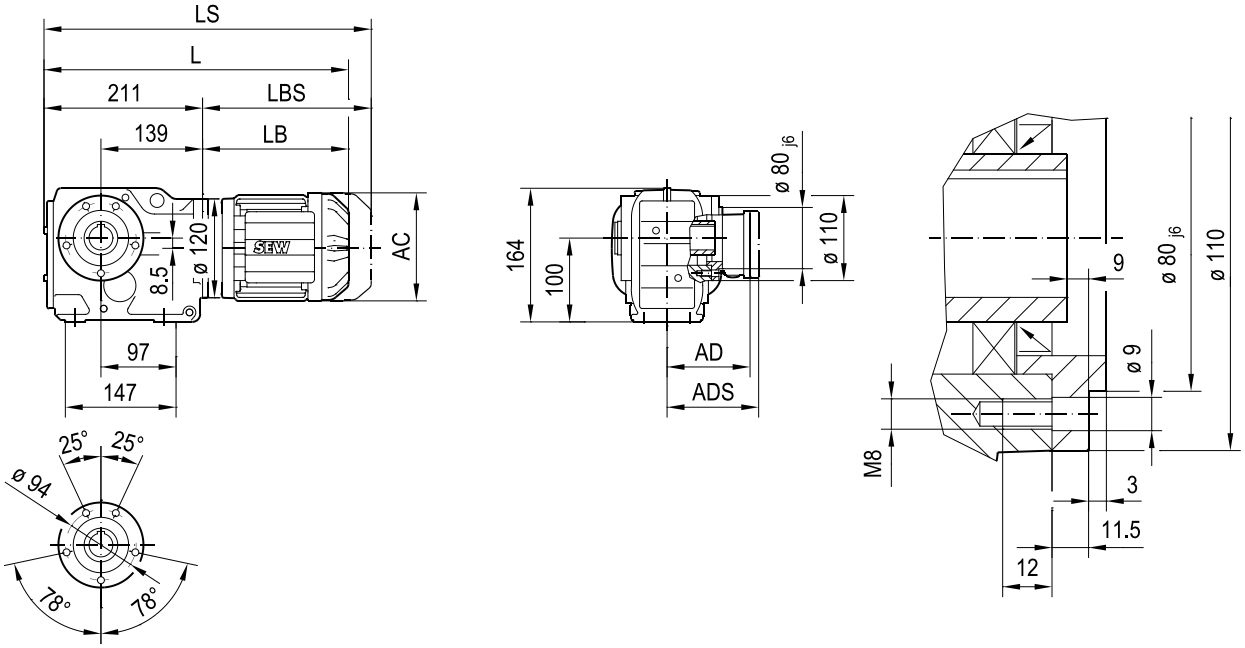

KAZ37..

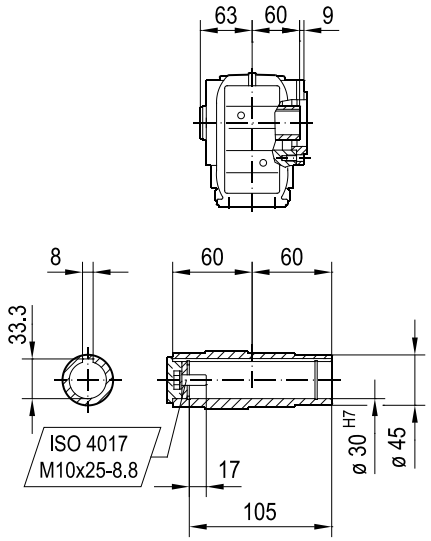

KHZ37..

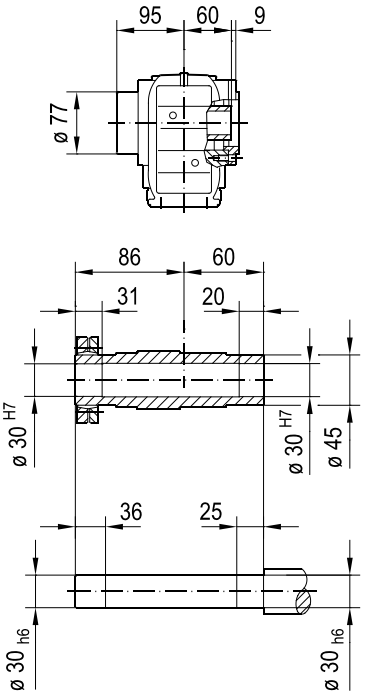

KVZ37..

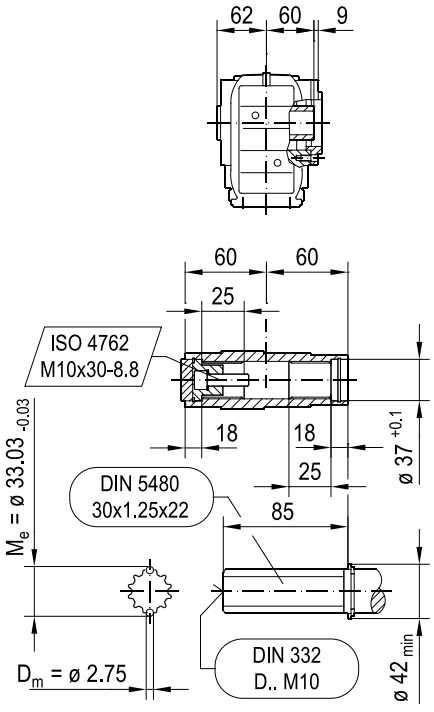

(→ 📖 4.1)	DRN										
	63MS	63M	71MS	71M	80MK	80MS	80M	90S	90L	100LS	100L/LM
AC	115	115	139	139	156	156	156	179	179	197	197
AD	98	98	118	118	128	128	128	140	140	157	157
ADS	98	98	129	129	139	139	139	150	150	158	158
L	401	415	417	437	448	465	494	495	527	525	575
LS	457	471	484	504	529	546	575	589	621	619	669
LB	190	204	206	226	237	254	283	284	316	314	364
LBS	246	260	273	293	318	335	364	378	410	408	458

KZ37..

33 232 00 15

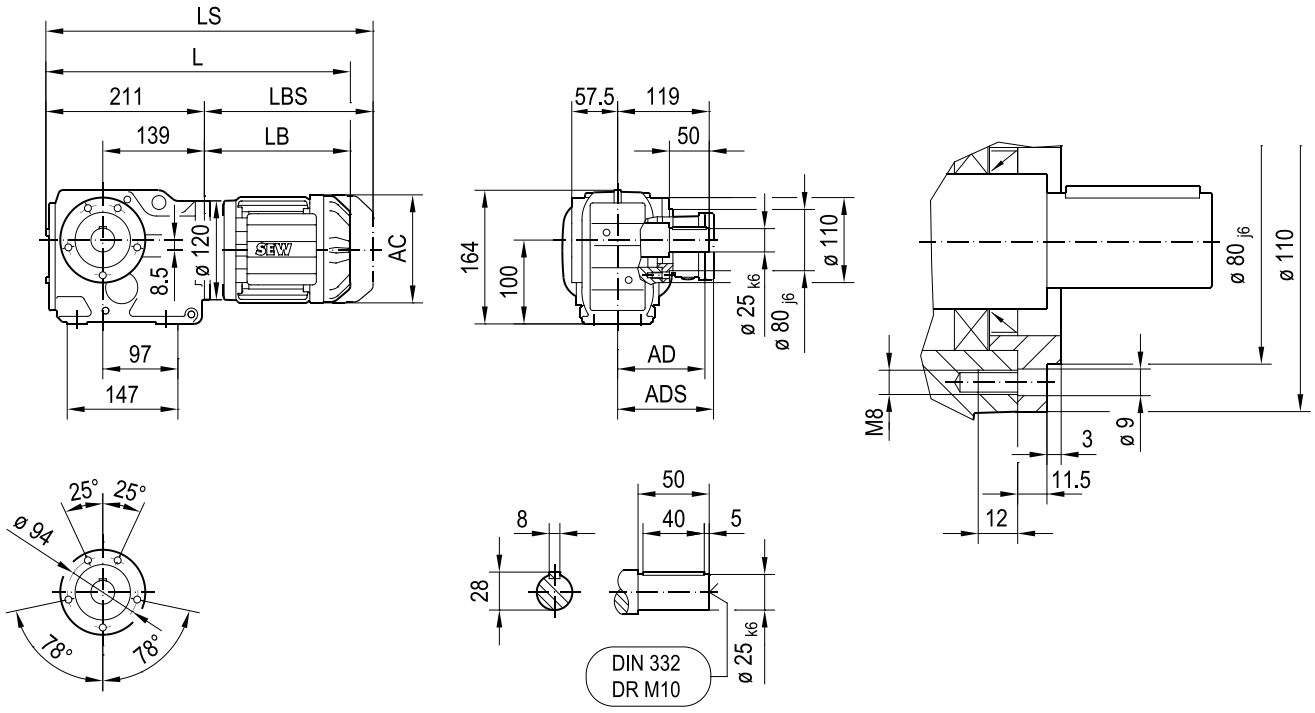

(→ 📖 4.1)	DRN										
	63MS	63M	71MS	71M	80MK	80MS	80M	90S	90L	100LS	100L/LM
AC	115	115	139	139	156	156	156	179	179	197	197
AD	98	98	118	118	128	128	128	140	140	157	157
ADS	98	98	129	129	139	139	139	150	150	158	158
L	401	415	417	437	448	465	494	495	527	525	575
LS	457	471	484	504	529	546	575	589	621	619	669
LB	190	204	206	226	237	254	283	284	316	314	364
LBS	246	260	273	293	318	335	364	378	410	408	458

KT37..

33 041 02 14

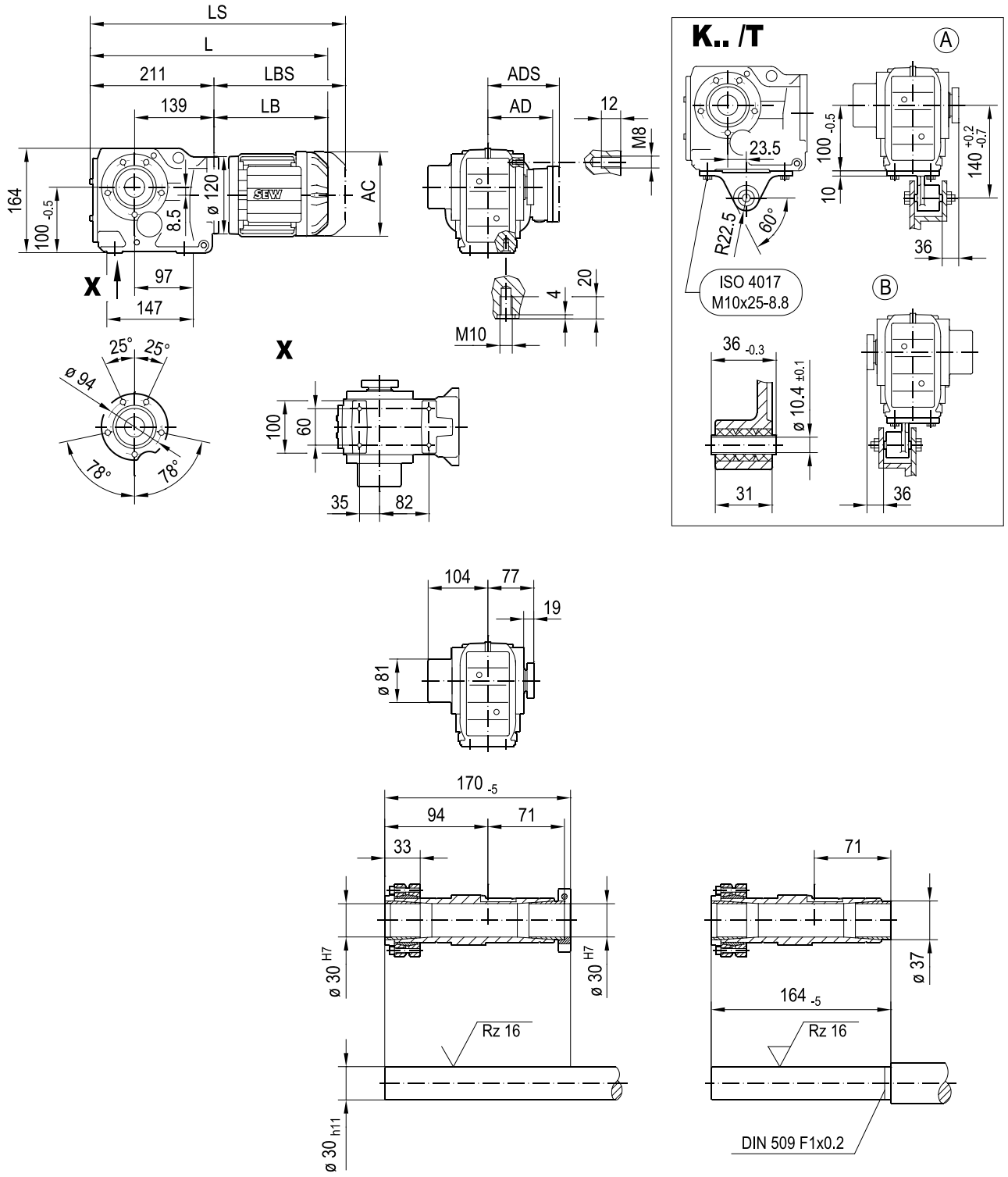

(→ 📖 4.1)	DRN										
	63MS	63M	71MS	71M	80MK	80MS	80M	90S	90L	100LS	100L/LM
AC	115	115	139	139	156	156	156	179	179	197	197
AD	98	98	118	118	128	128	128	140	140	157	157
ADS	98	98	129	129	139	139	139	150	150	158	158
L	401	415	417	437	448	465	494	495	527	525	575
LS	457	471	484	504	529	546	575	589	621	619	669
LB	190	204	206	226	237	254	283	284	316	314	364
LBS	246	260	273	293	318	335	364	378	410	408	458

33 021 02 14

K39..

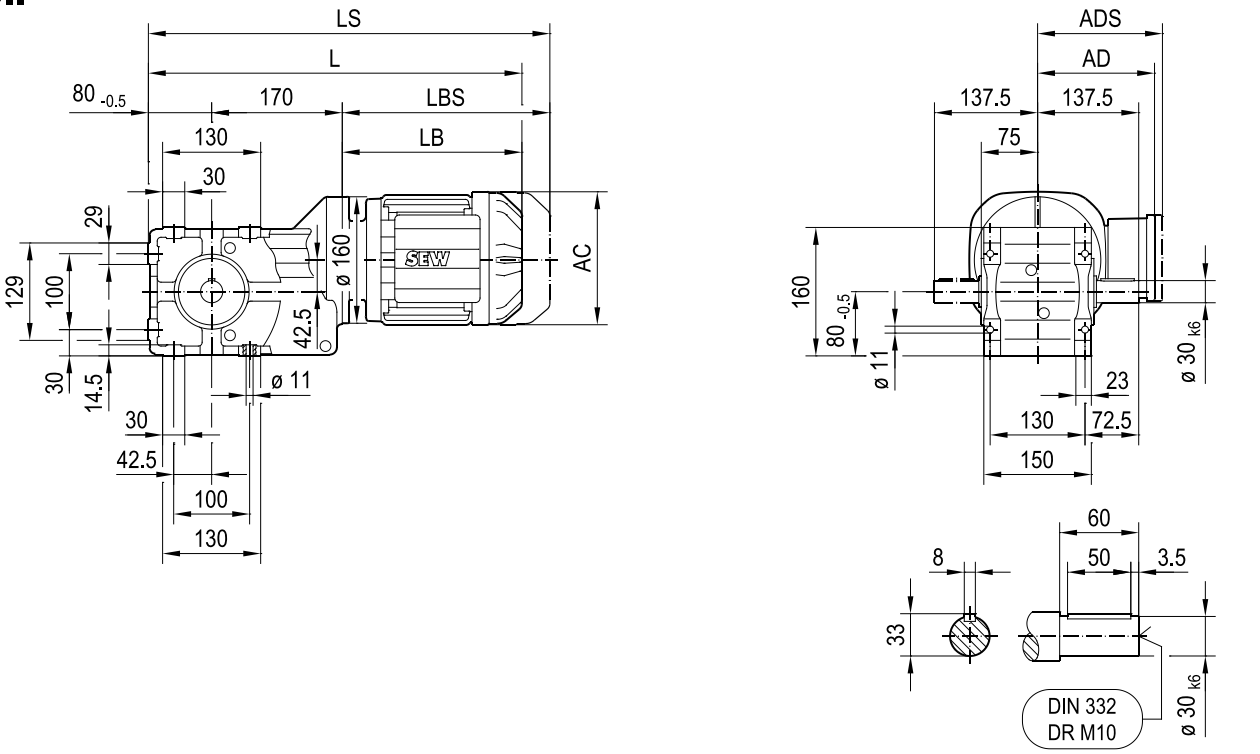

KA39B..

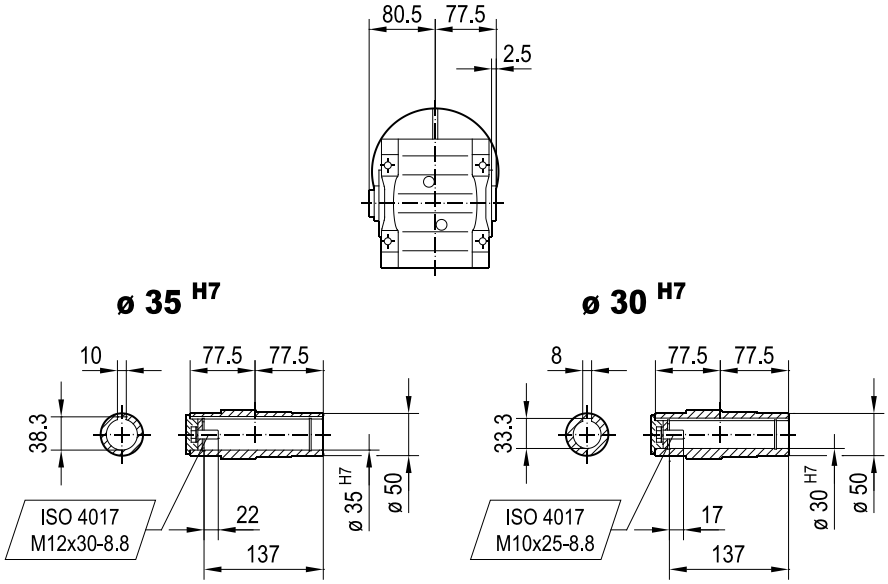

KH39B..

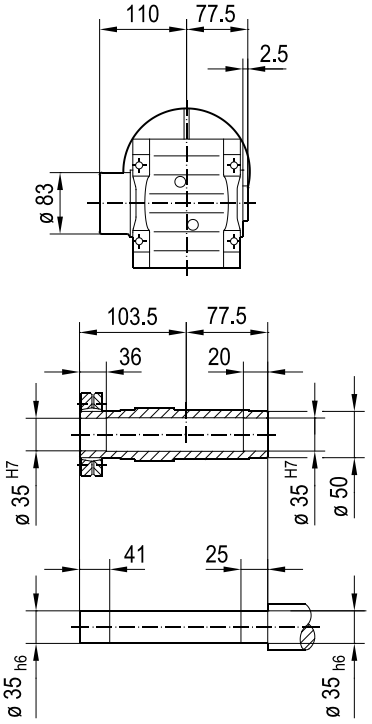

(→ 4.1)	DRN										
	63M	71MS	71M	80MK	80MS	80M	90S	90L	100LS	100L/LM	112M
AC	115	139	139	156	156	156	179	179	197	197	221
AD	98	118	118	128	128	128	140	140	157	157	170
ADS	98	129	129	139	139	139	150	150	158	158	172
L	448	449	469	480	497	526	528	560	555	605	636
LS	504	517	537	561	578	607	621	653	649	699	748
LB	198	199	219	230	247	276	278	310	305	355	386
LBS	254	267	287	311	328	357	371	403	399	449	498

33 022 01 14

KF39..

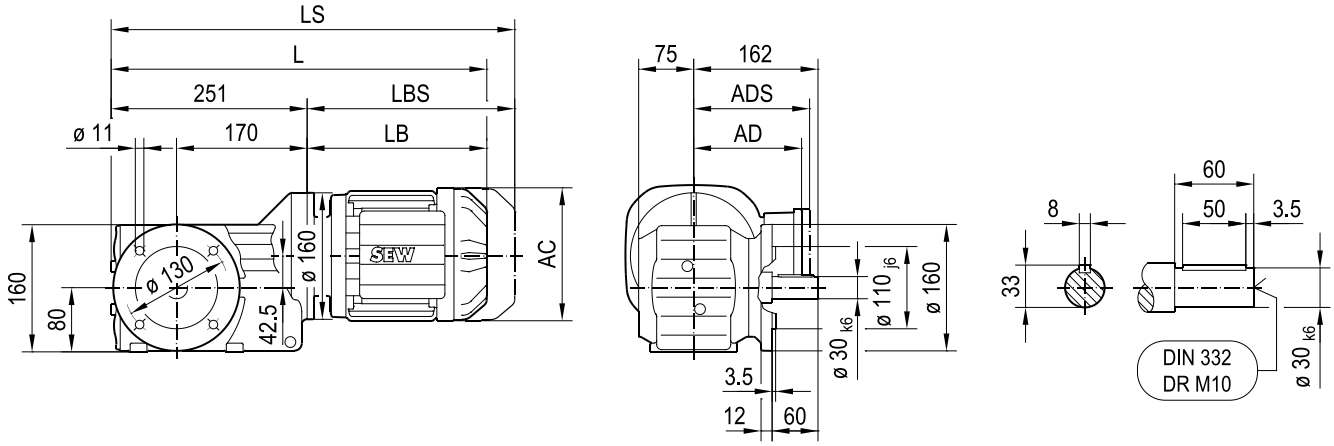

KAF39..

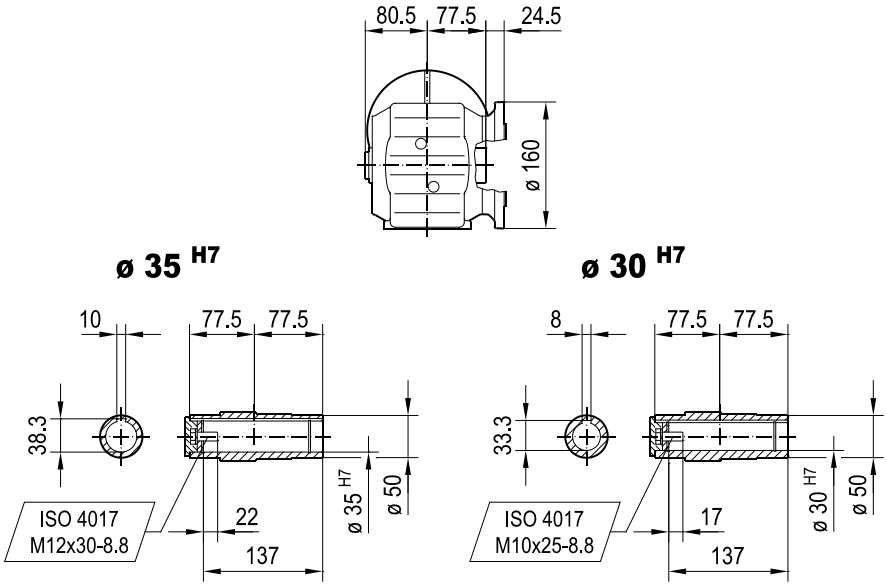

KHF39..

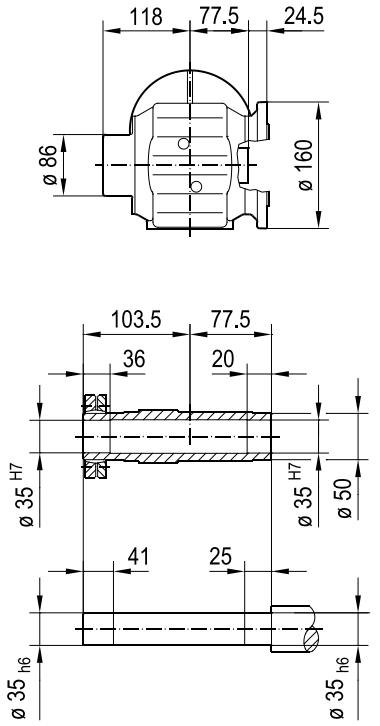

(→ 📖 4.1)	DRN										
	63M	71MS	71M	80MK	80MS	80M	90S	90L	100LS	100L/LM	112M
AC	115	139	139	156	156	156	179	179	197	197	221
AD	98	118	118	128	128	128	140	140	157	157	170
ADS	98	129	129	139	139	139	150	150	158	158	172
L	449	450	470	481	498	527	529	561	556	606	637
LS	505	518	538	562	579	608	622	654	650	700	749
LB	198	199	219	230	247	276	278	310	305	355	386
LBS	254	267	287	311	328	357	371	403	399	449	498

33 023 01 14

KA39..

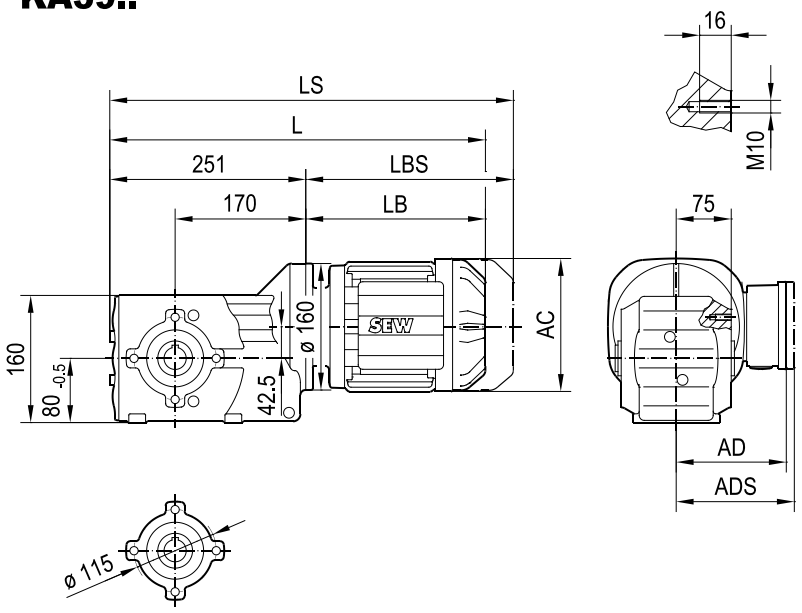

K.. /T

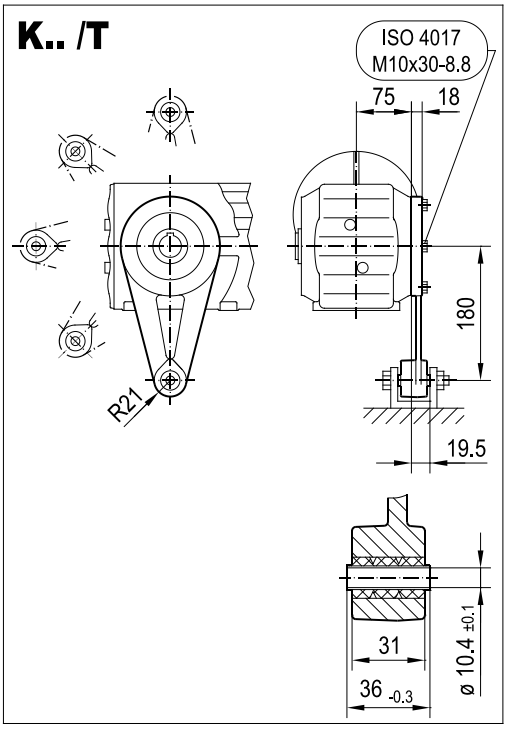

KA39..

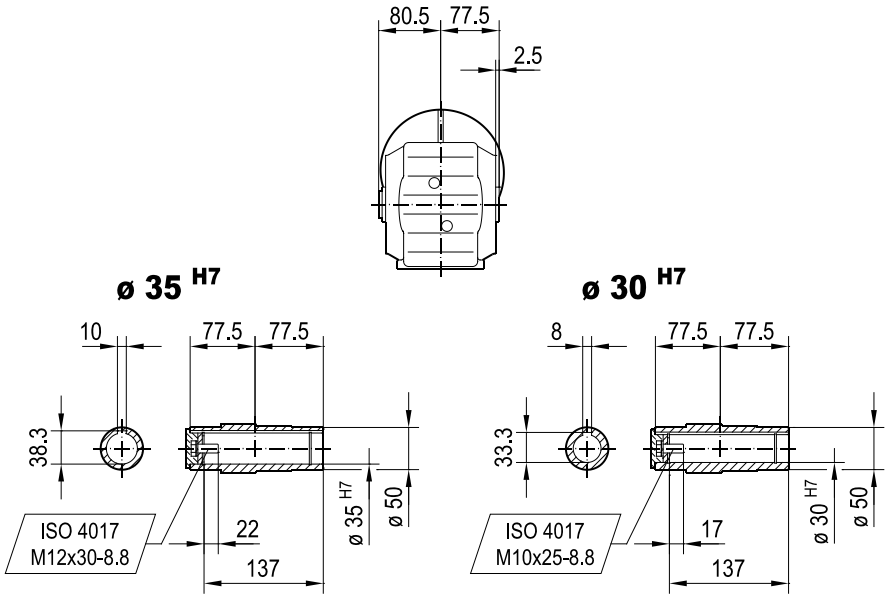

KH39..

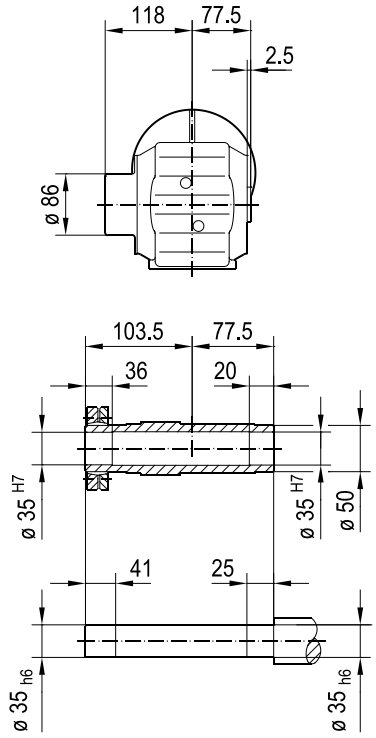

(→ 📖 4.1)	DRN										
	63M	71MS	71M	80MK	80MS	80M	90S	90L	100LS	100L/LM	112M
AC	115	139	139	156	156	156	179	179	197	197	221
AD	98	118	118	128	128	128	140	140	157	157	170
ADS	98	129	129	139	139	139	150	150	158	158	172
L	449	450	470	481	498	527	529	561	556	606	637
LS	505	518	538	562	579	608	622	654	650	700	749
LB	198	199	219	230	247	276	278	310	305	355	386
LBS	254	267	287	311	328	357	371	403	399	449	498

33 024 03 14

KT39..

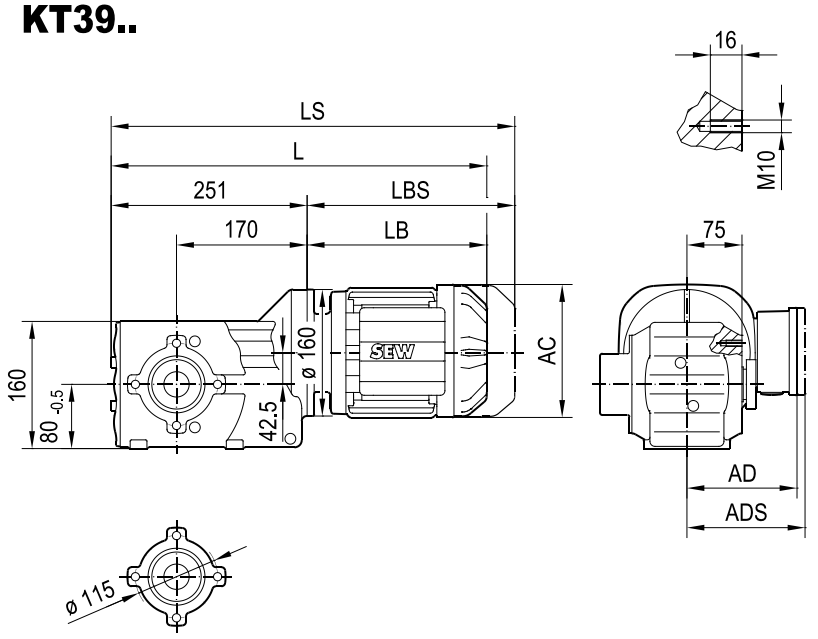

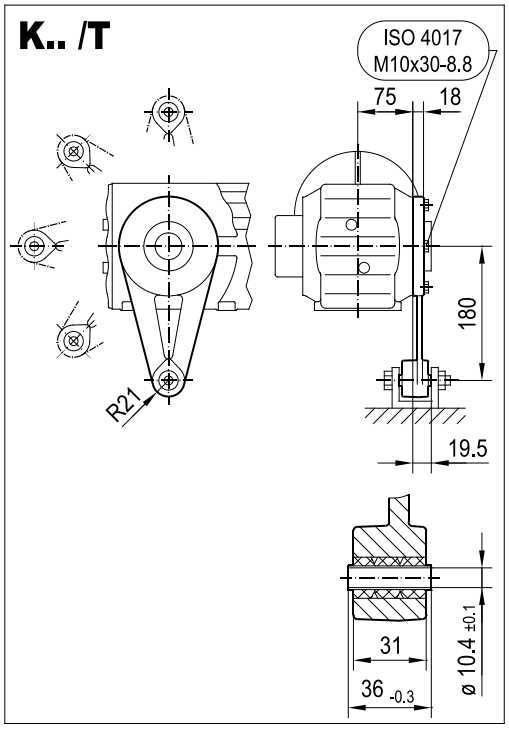

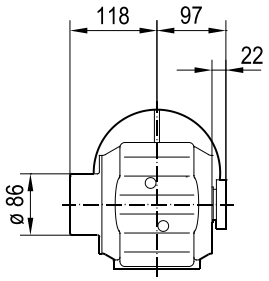

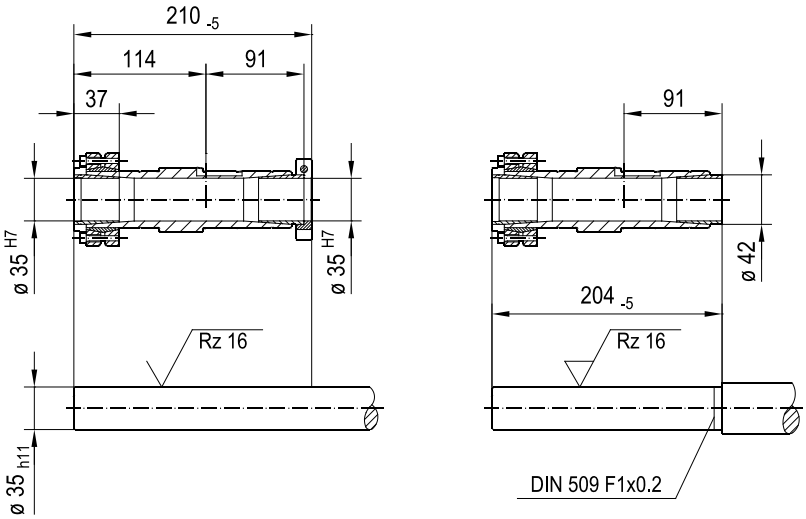

(→ 📖 4.1)	DRN										
	63M	71MS	71M	80MK	80MS	80M	90S	90L	100LS	100L/LM	112M
AC	115	139	139	156	156	156	179	179	197	197	221
AD	98	118	118	128	128	128	140	140	157	157	170
ADS	98	129	129	139	139	139	150	150	158	158	172
L	449	450	470	481	498	527	529	561	556	606	637
LS	505	518	538	562	579	608	622	654	650	700	749
LB	198	199	219	230	247	276	278	310	305	355	386
LBS	254	267	287	311	328	357	371	403	399	449	498

33 042 02 14

K47..

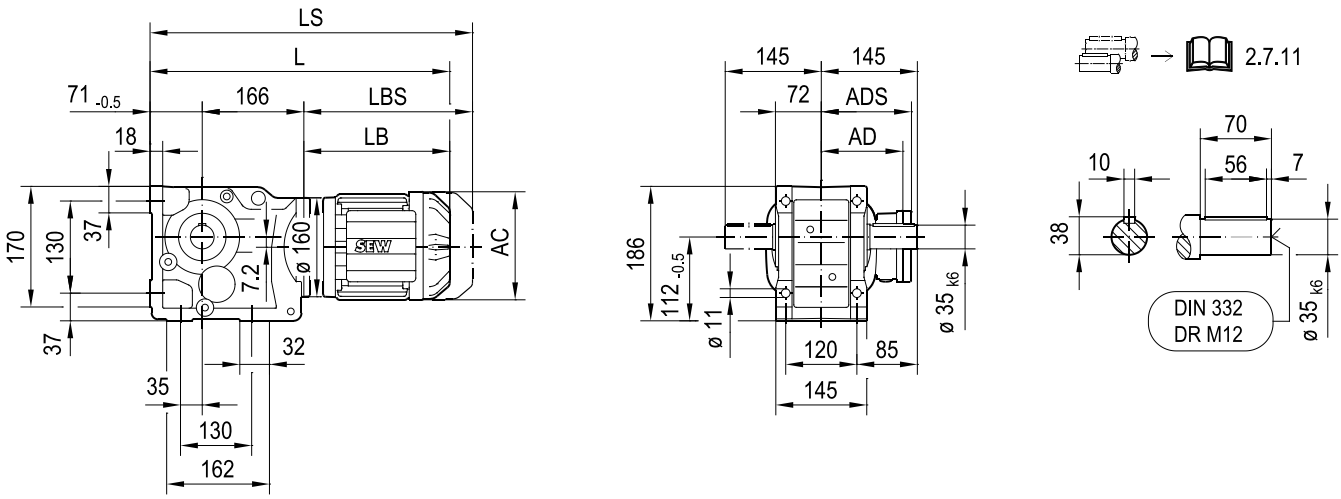

KA47B..

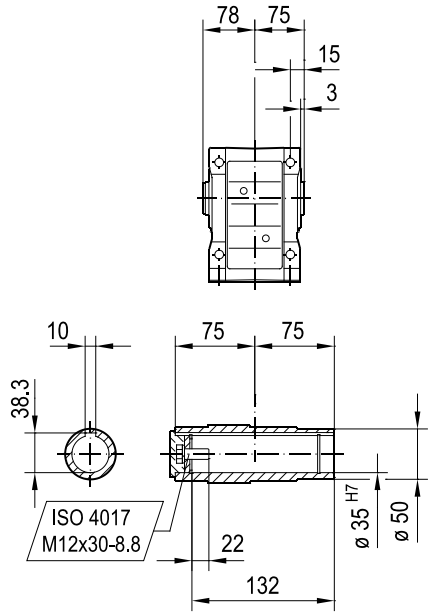

KH47B..

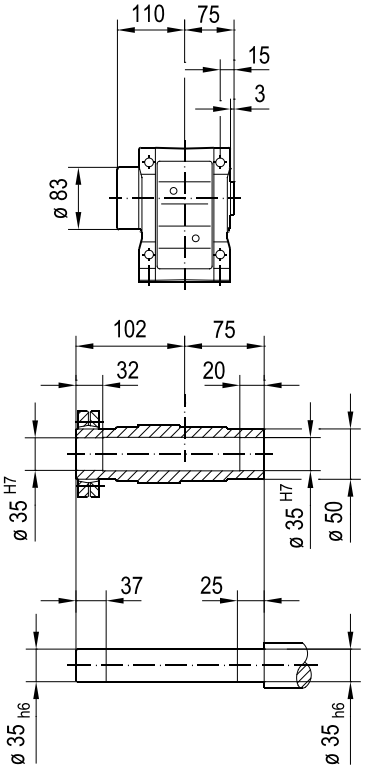

KV47B..

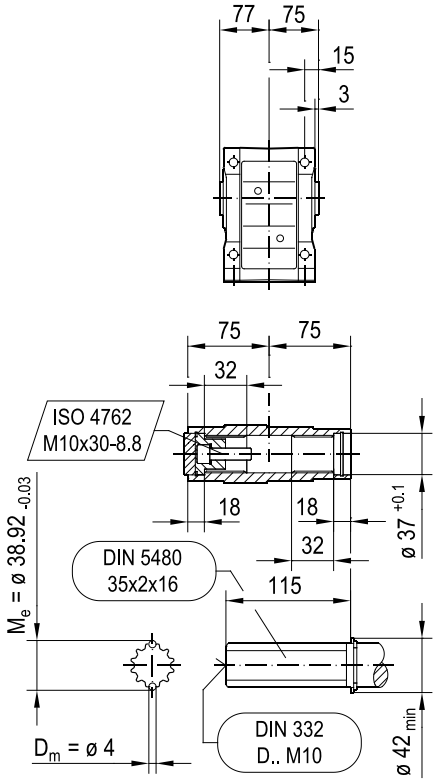

(→ 4.1)	DRN										
	63MS	63M	71MS	71M	80MK	80MS	80M	90S	90L	100LS	100L/LM
AC	115	115	139	139	156	156	156	179	179	197	197
AD	98	98	118	118	128	128	128	140	140	157	157
ADS	98	98	129	129	139	139	139	150	150	158	158
L	421	435	436	456	467	484	513	515	547	542	592
LS	477	491	504	524	548	565	594	608	640	636	686
LB	184	198	199	219	230	247	276	278	310	305	355
LBS	240	254	267	287	311	328	357	371	403	399	449

33 043 02 14

KF47..

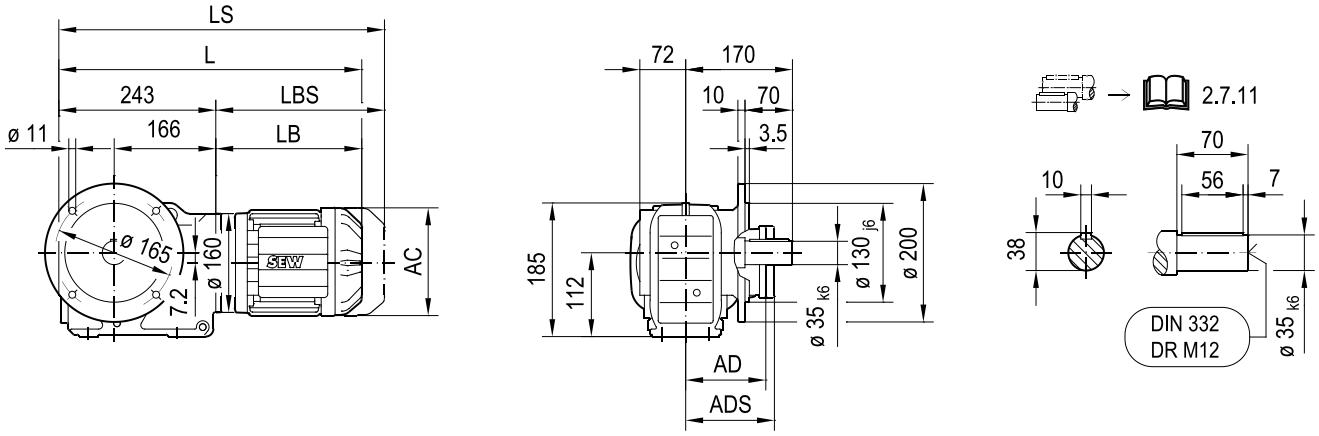

KAF47..

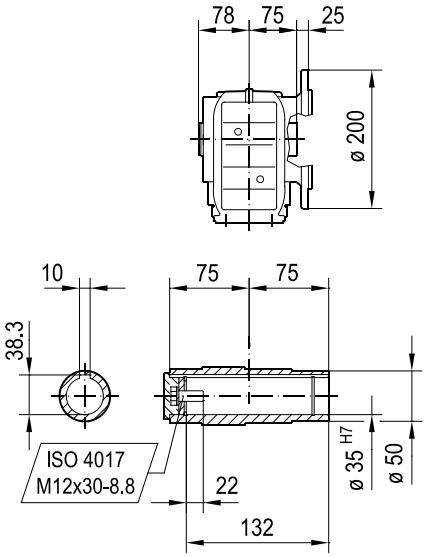

KHF47..

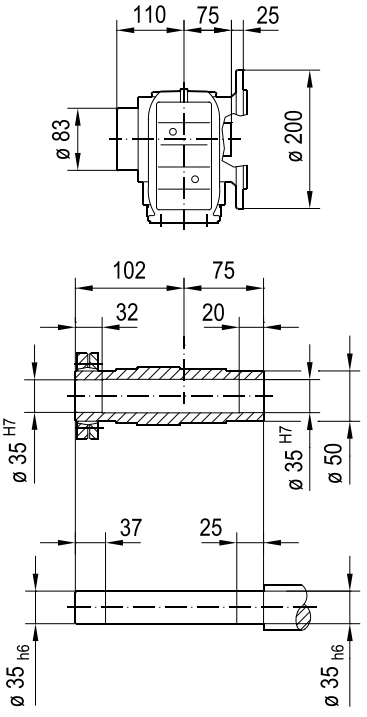

KVF47..

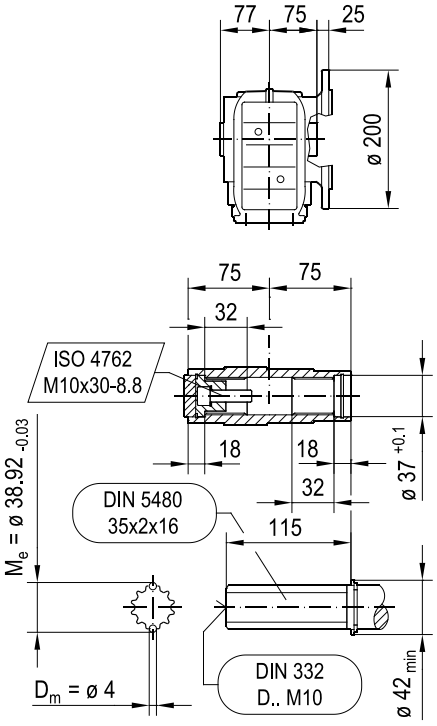

(→ 📖 4.1)	DRN										
	63MS	63M	71MS	71M	80MK	80MS	80M	90S	90L	100LS	100L/LM
AC	115	115	139	139	156	156	156	179	179	197	197
AD	98	98	118	118	128	128	128	140	140	157	157
ADS	98	98	129	129	139	139	139	150	150	158	158
L	427	441	442	462	473	490	519	521	553	548	598
LS	483	497	510	530	554	571	600	614	646	642	692
LB	184	198	199	219	230	247	276	278	310	305	355
LBS	240	254	267	287	311	328	357	371	403	399	449

33 044 00 14

KA47..

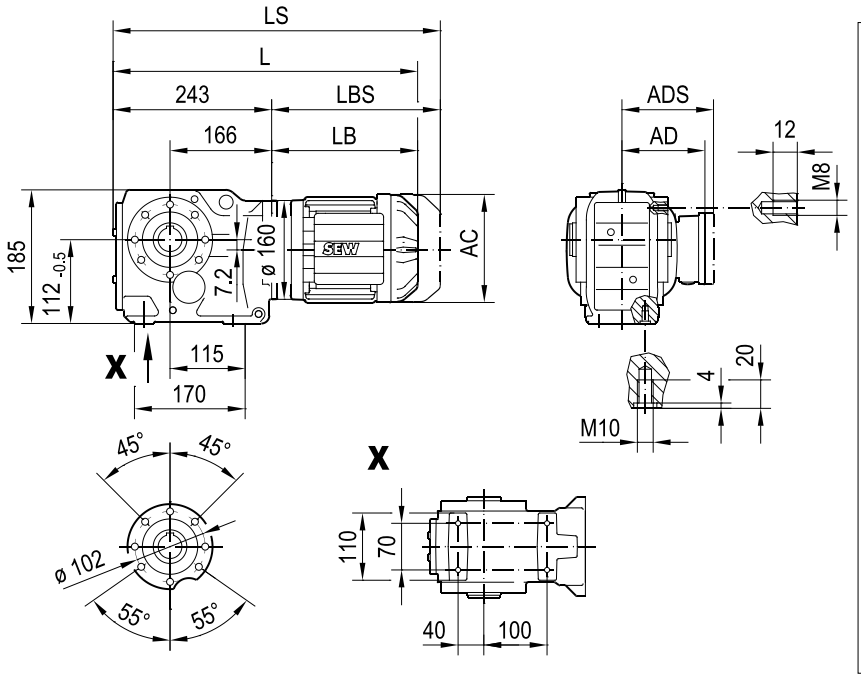

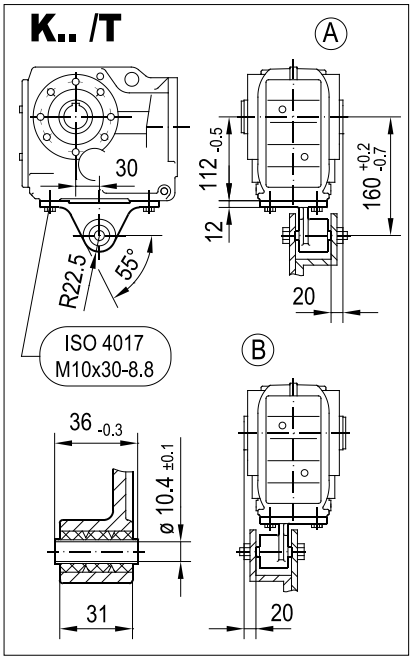

KA47..

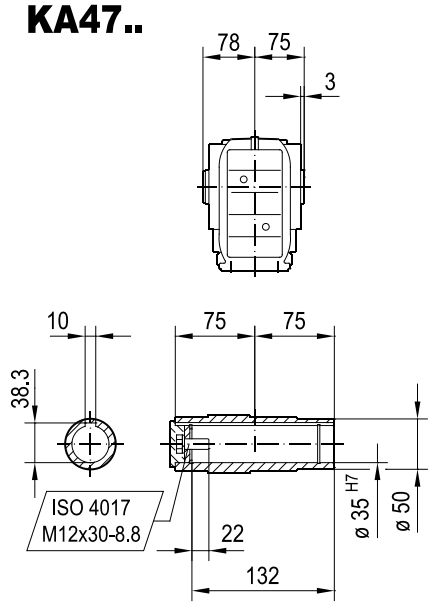

KH47..

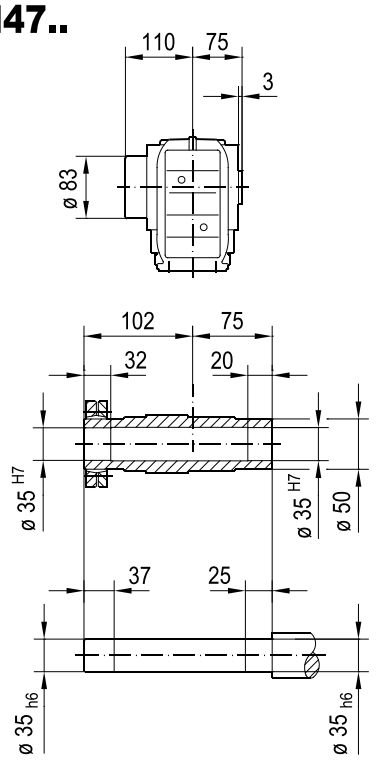

KV47..

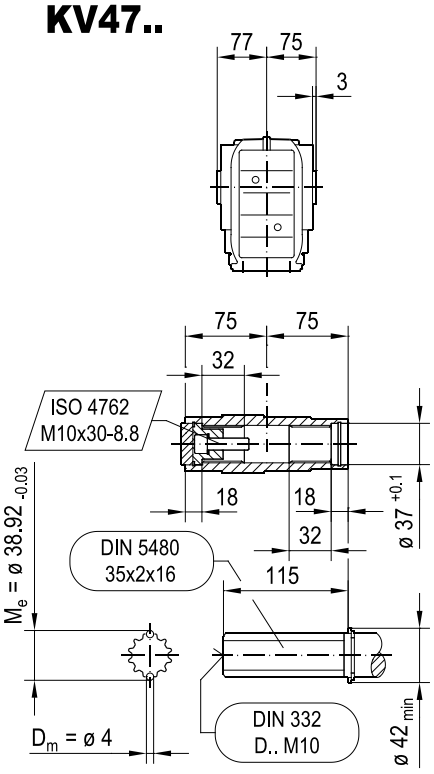

(→ 4.1)	DRN										
	63MS	63M	71MS	71M	80MK	80MS	80M	90S	90L	100LS	100L/LM
AC	115	115	139	139	156	156	156	179	179	197	197
AD	98	98	118	118	128	128	128	140	140	157	157
ADS	98	98	129	129	139	139	139	150	150	158	158
L	427	441	442	462	473	490	519	521	553	548	598
LS	483	497	510	530	554	571	600	614	646	642	692
LB	184	198	199	219	230	247	276	278	310	305	355
LBS	240	254	267	287	311	328	357	371	403	399	449

33 045 00 14

KAZ47..

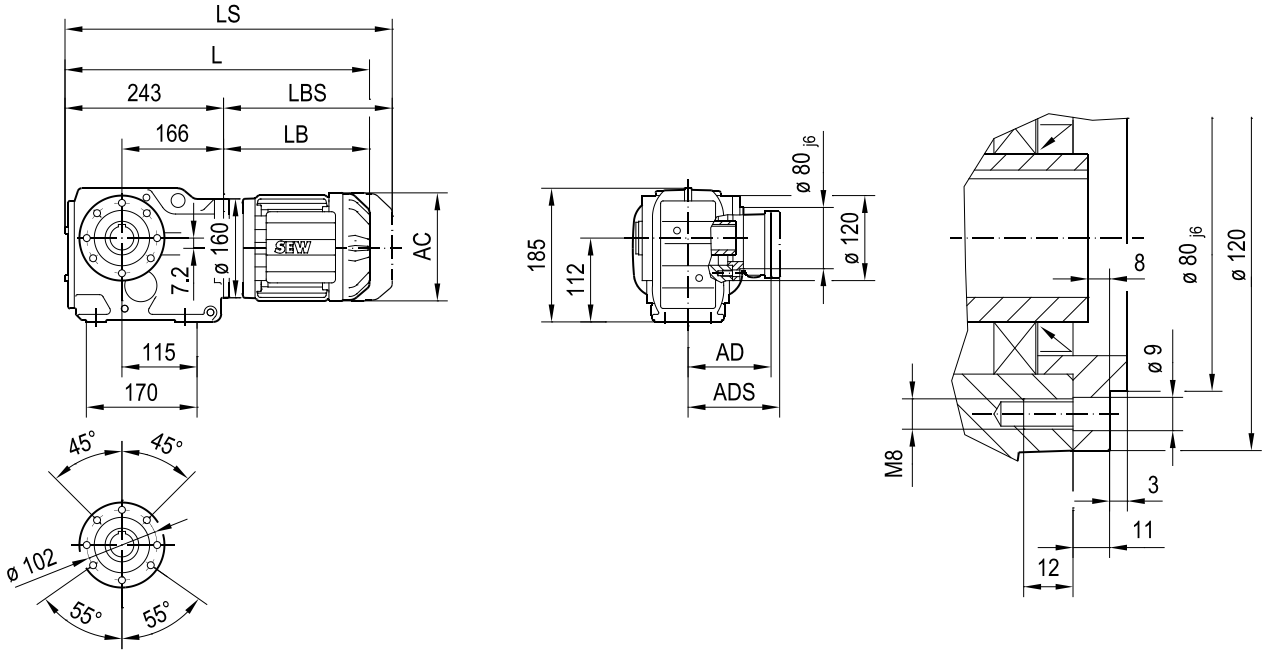

KAZ47..

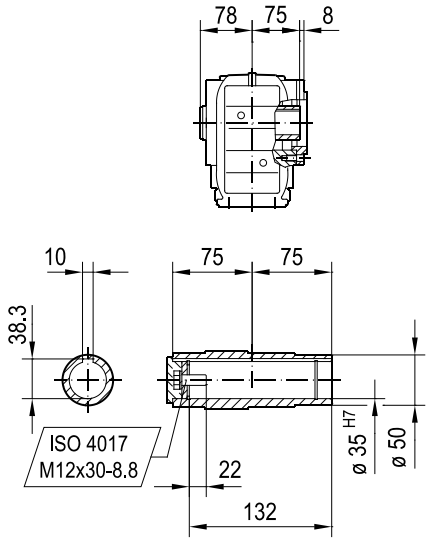

KHZ47..

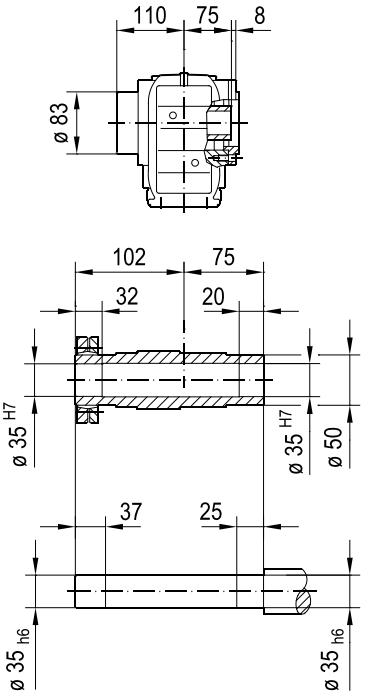

KVZ47..

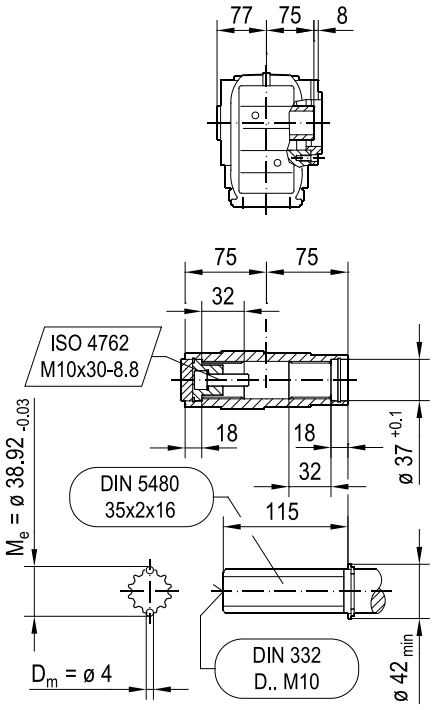

(→ 📖 4.1)	DRN										
	63MS	63M	71MS	71M	80MK	80MS	80M	90S	90L	100LS	100L/LM
AC	115	115	139	139	156	156	156	179	179	197	197
AD	98	98	118	118	128	128	128	140	140	157	157
ADS	98	98	129	129	139	139	139	150	150	158	158
L	427	441	442	462	473	490	519	521	553	548	598
LS	483	497	510	530	554	571	600	614	646	642	692
LB	184	198	199	219	230	247	276	278	310	305	355
LBS	240	254	267	287	311	328	357	371	403	399	449

KZ47..

33 233 02 15

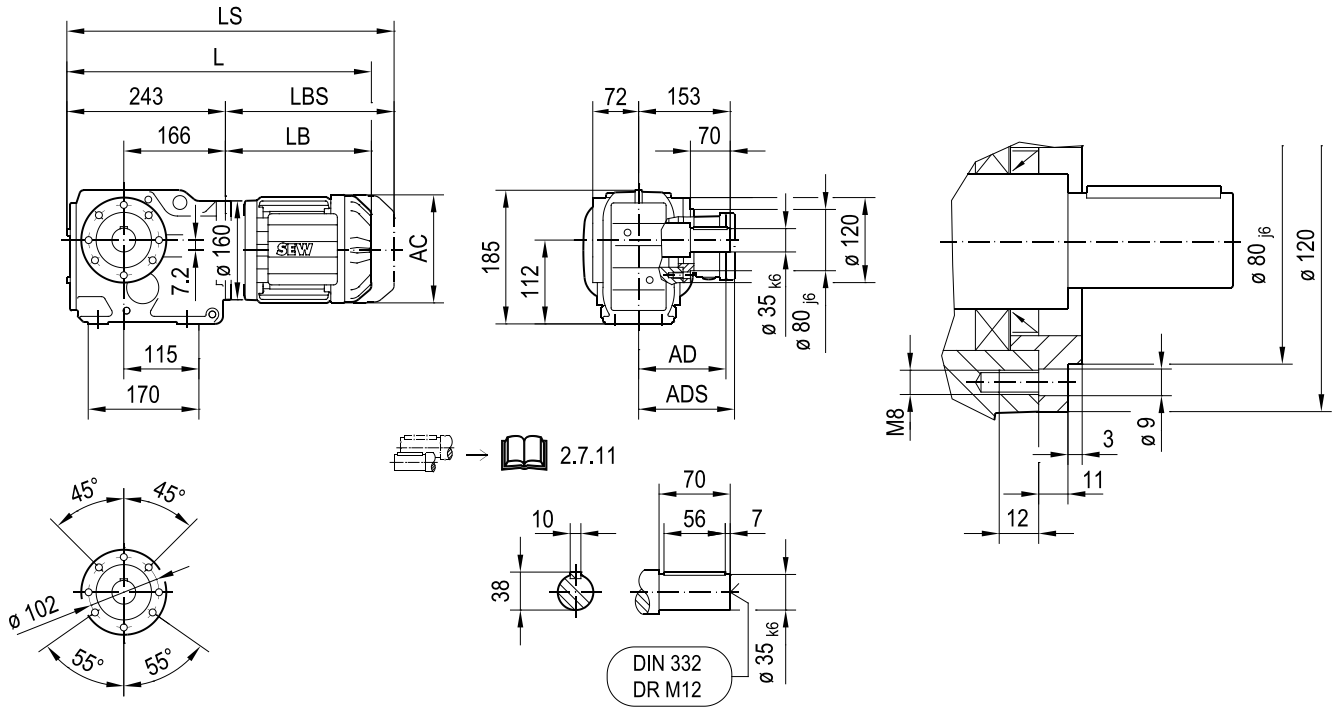

(→ 📖 4.1)	DRN										
	63MS	63M	71MS	71M	80MK	80MS	80M	90S	90L	100LS	100L/LM
AC	115	115	139	139	156	156	156	179	179	197	197
AD	98	98	118	118	128	128	128	140	140	157	157
ADS	98	98	129	129	139	139	139	150	150	158	158
L	427	441	442	462	473	490	519	521	553	548	598
LS	483	497	510	530	554	571	600	614	646	642	692
LB	184	198	199	219	230	247	276	278	310	305	355
LBS	240	254	267	287	311	328	357	371	403	399	449

KT47..

33 046 02 14

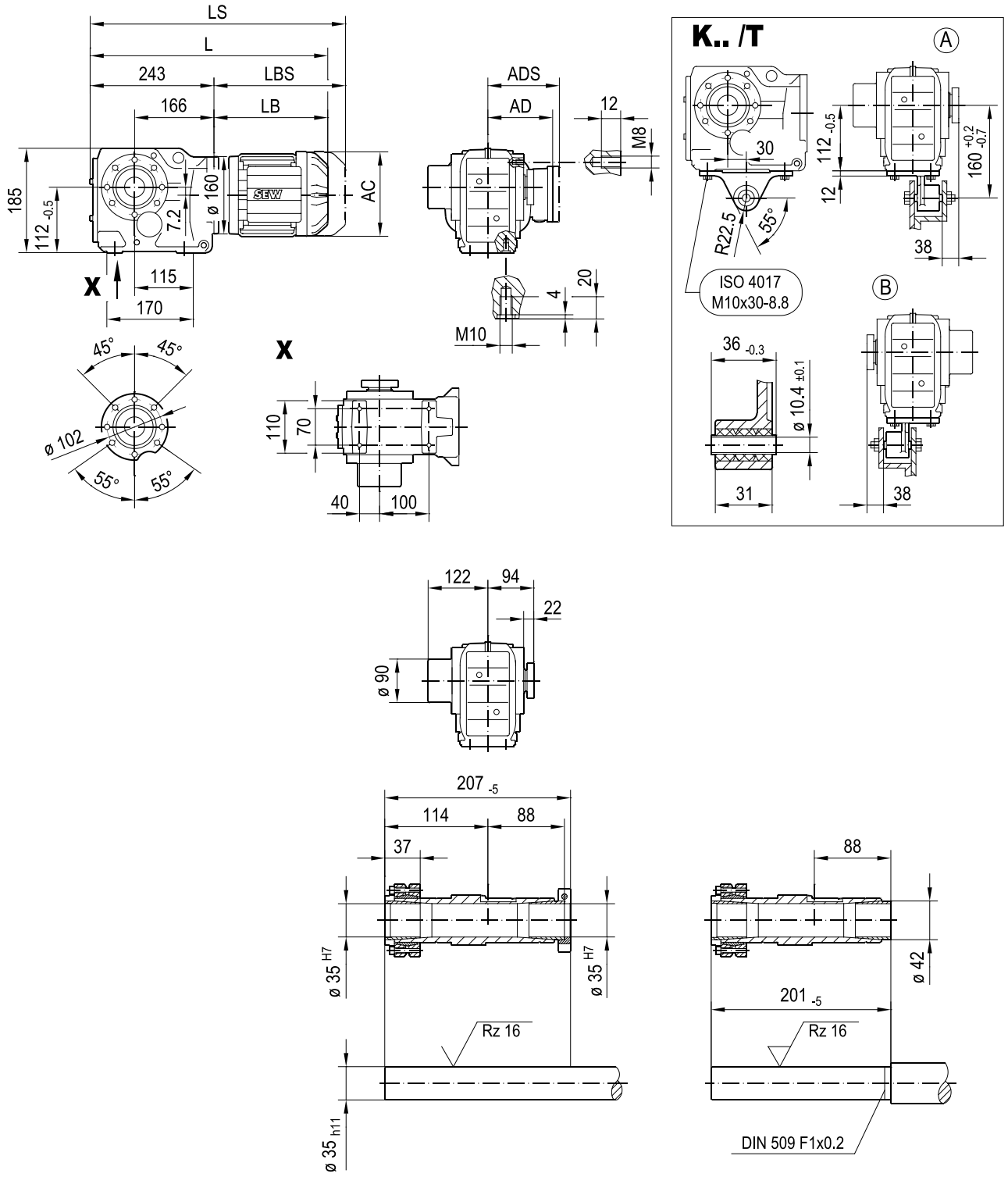

(→ 📖 4.1)	DRN										
	63MS	63M	71MS	71M	80MK	80MS	80M	90S	90L	100LS	100L/LM
AC	115	115	139	139	156	156	156	179	179	197	197
AD	98	98	118	118	128	128	128	140	140	157	157
ADS	98	98	129	129	139	139	139	150	150	158	158
L	427	441	442	462	473	490	519	521	553	548	598
LS	483	497	510	530	554	571	600	614	646	642	692
LB	184	198	199	219	230	247	276	278	310	305	355
LBS	240	254	267	287	311	328	357	371	403	399	449

33 025 02 14

K49..

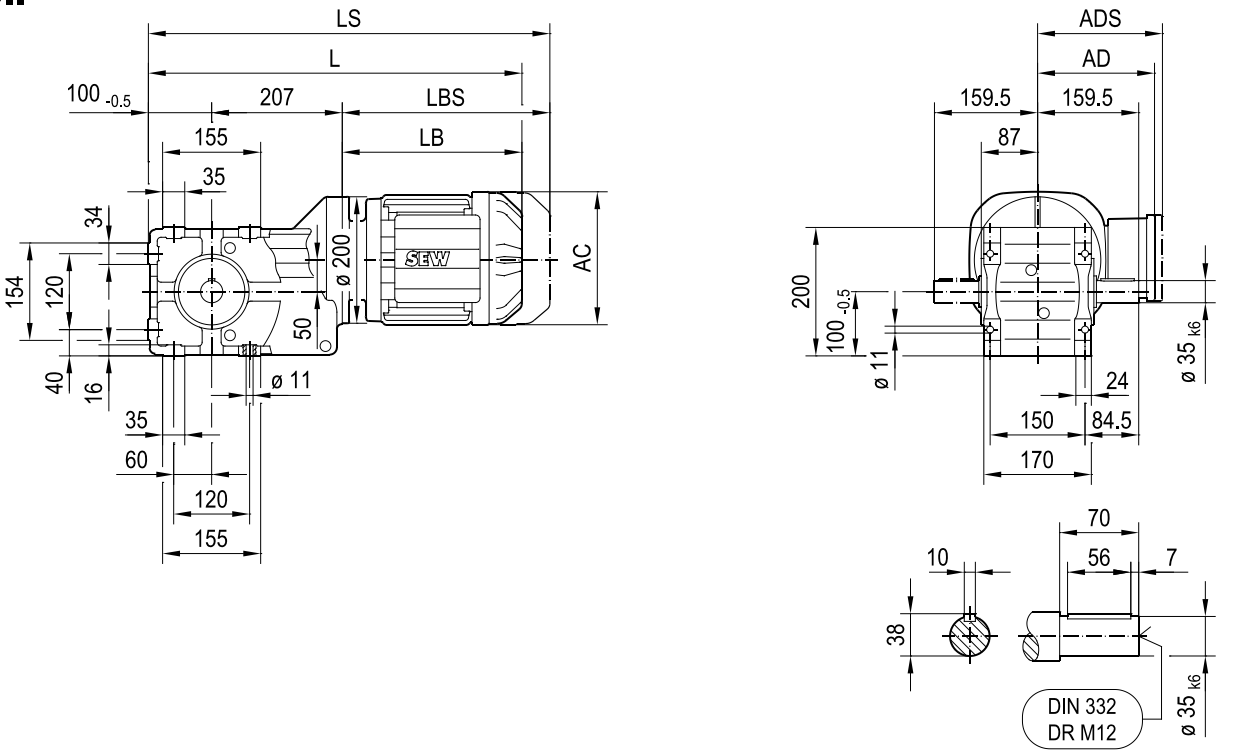

KA49B..

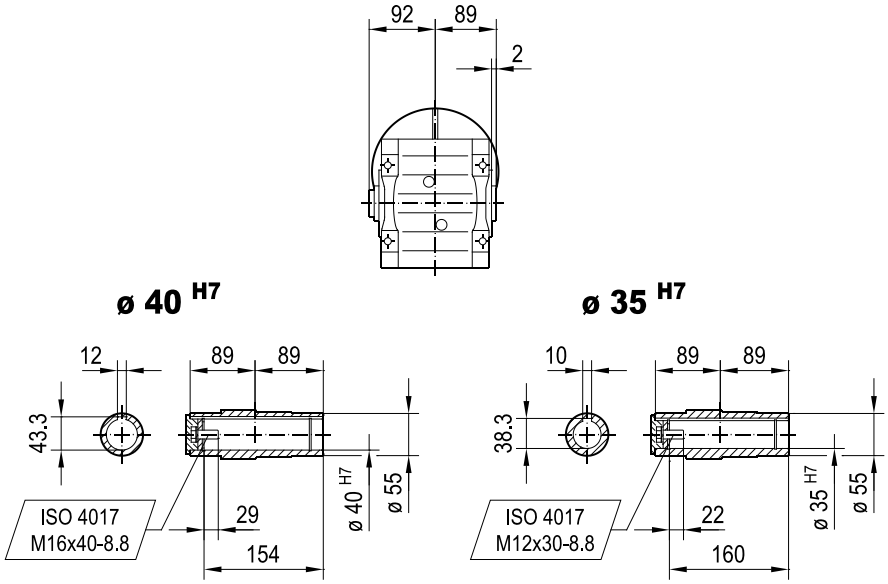

KH49B..

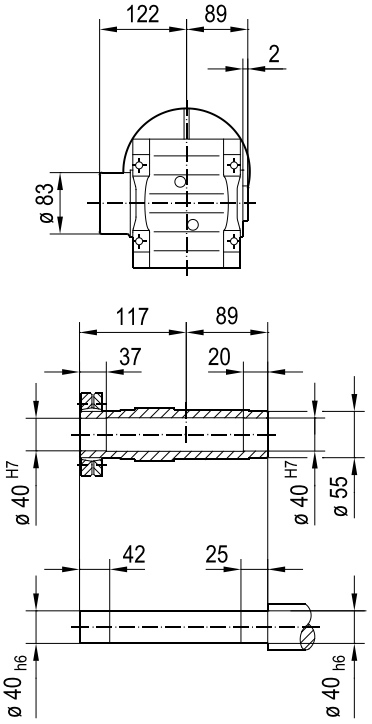

(→ 📖 4.1)	DRN											
	71MS	71M	80MK	80MS	80M	90S	90L	100LS	100L/LM	112M	132S	132M
AC	139	139	156	156	156	179	179	197	197	221	221	261
AD	118	118	128	128	128	140	140	157	157	170	170	228
ADS	129	129	139	139	139	150	150	158	158	172	172	228
L	499	519	530	547	576	578	610	605	655	686	736	754
LS	567	587	611	628	657	671	703	699	749	798	848	892
LB	192	212	223	240	269	271	303	298	348	379	429	447
LBS	260	280	304	321	350	364	396	392	442	491	541	585

33 026 02 14

KF49..

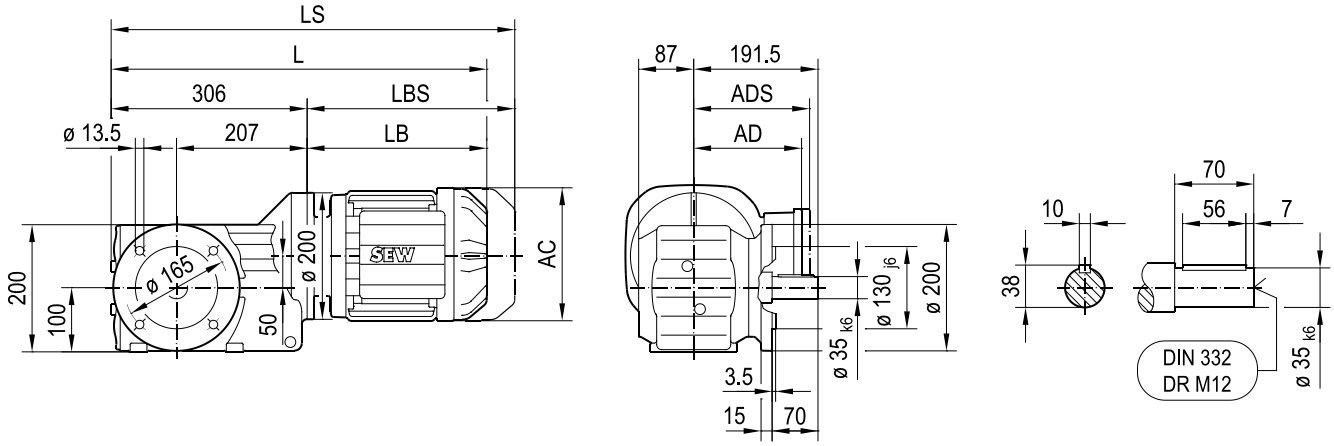

KAF49..

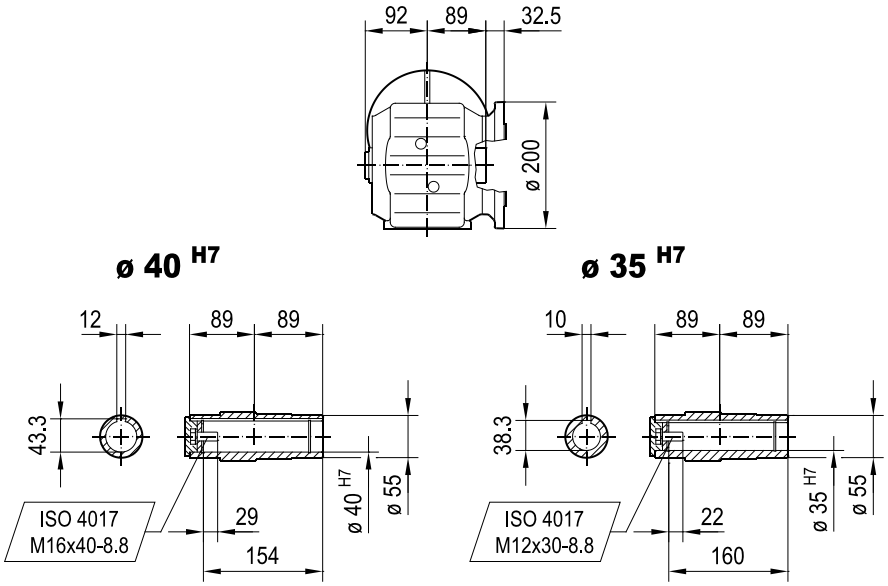

KHF49..

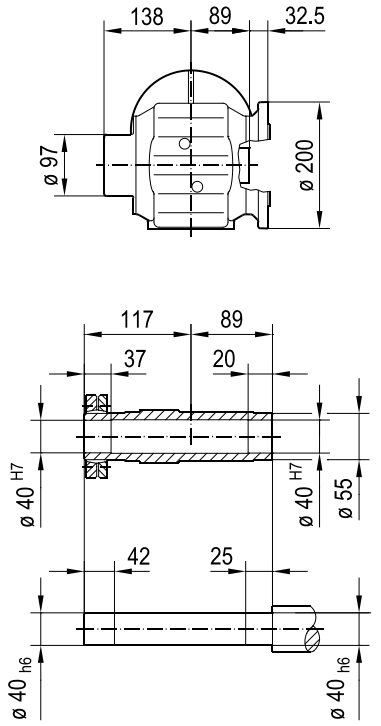

(→ 📖 4.1)	DRN											
	71MS	71M	80MK	80MS	80M	90S	90L	100LS	100L/LM	112M	132S	132M
AC	139	139	156	156	156	179	179	197	197	221	221	261
AD	118	118	128	128	128	140	140	157	157	170	170	228
ADS	129	129	139	139	139	150	150	158	158	172	172	228
L	498	518	529	546	575	577	609	604	654	685	735	753
LS	566	586	610	627	656	670	702	698	748	797	847	891
LB	192	212	223	240	269	271	303	298	348	379	429	447
LBS	260	280	304	321	350	364	396	392	442	491	541	585

33 027 02 14

KA49..

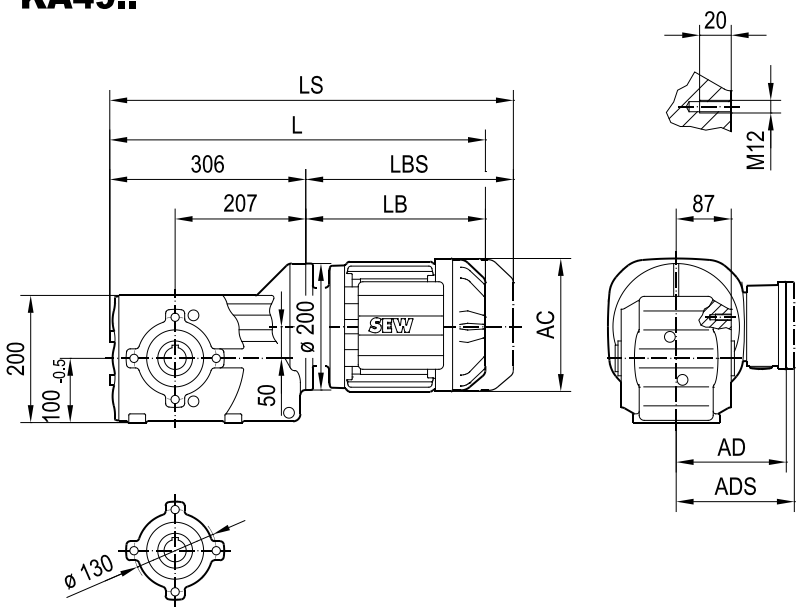

K.. /T

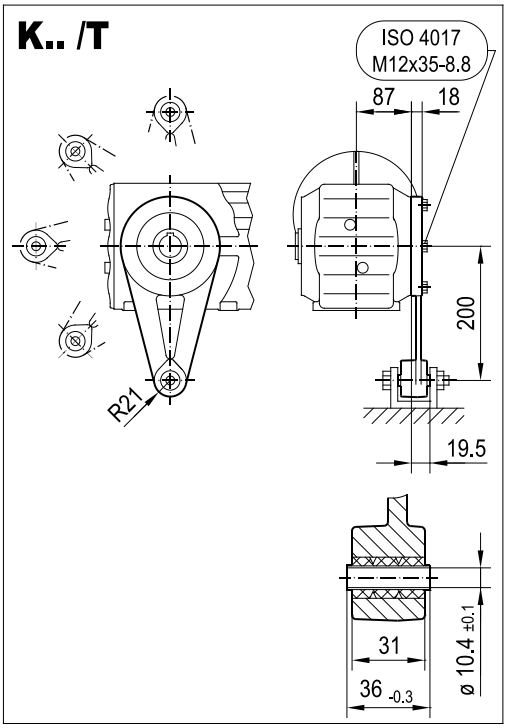

KA49..

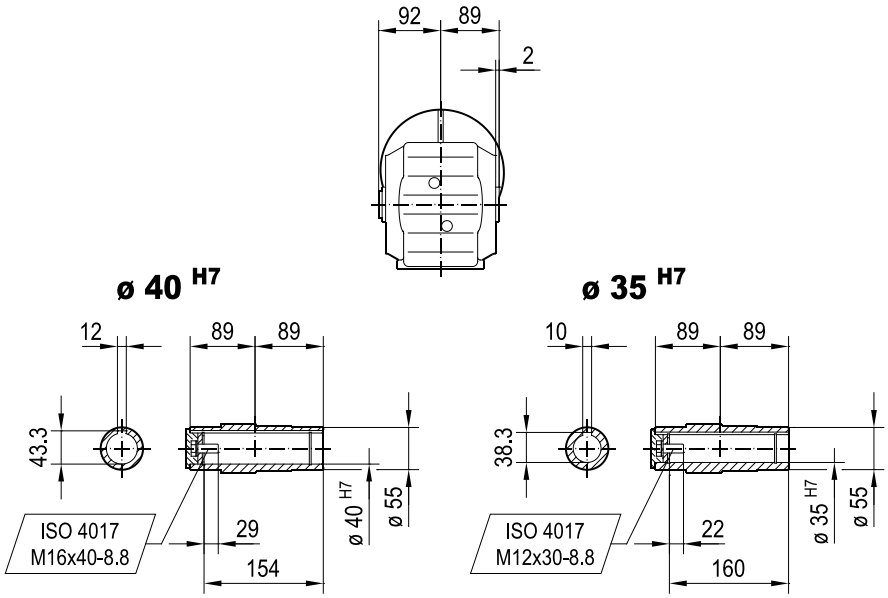

KH49..

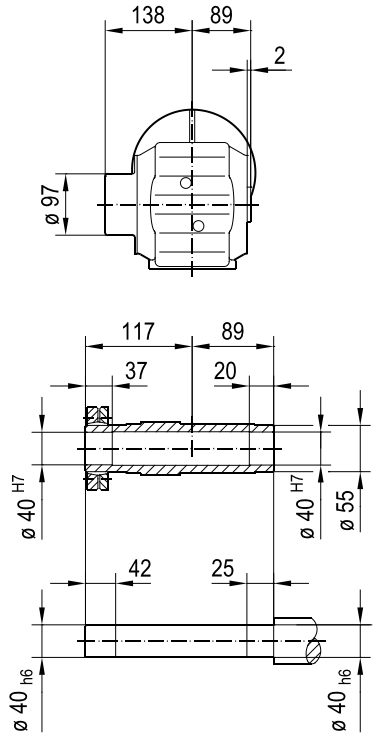

(→ 4.1)	DRN											
	71MS	71M	80MK	80MS	80M	90S	90L	100LS	100L/LM	112M	132S	132M
AC	139	139	156	156	156	179	179	197	197	221	221	261
AD	118	118	128	128	128	140	140	157	157	170	170	228
ADS	129	129	139	139	139	150	150	158	158	172	172	228
L	498	518	529	546	575	577	609	604	654	685	735	753
LS	566	586	610	627	656	670	702	698	748	797	847	891
LB	192	212	223	240	269	271	303	298	348	379	429	447
LBS	260	280	304	321	350	364	396	392	442	491	541	585

KT49..

33 028 03 14

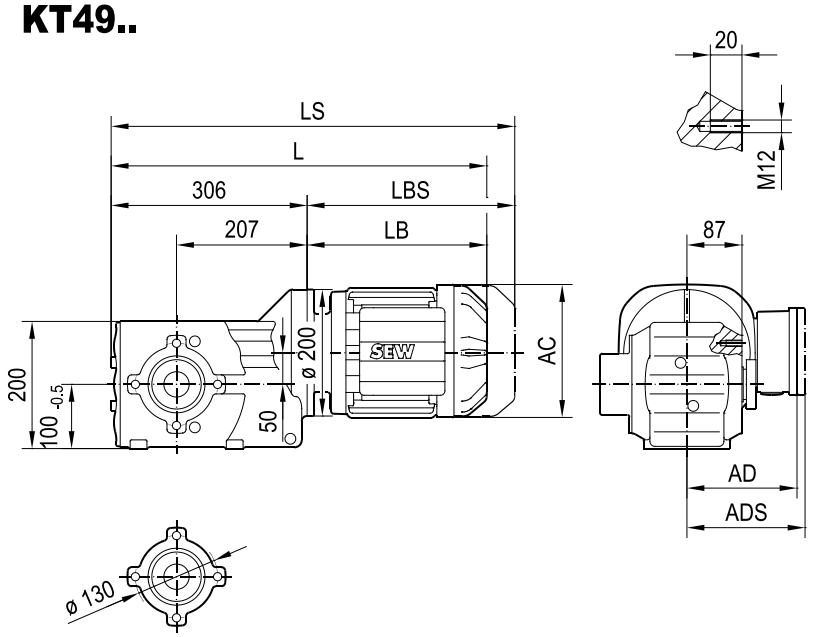

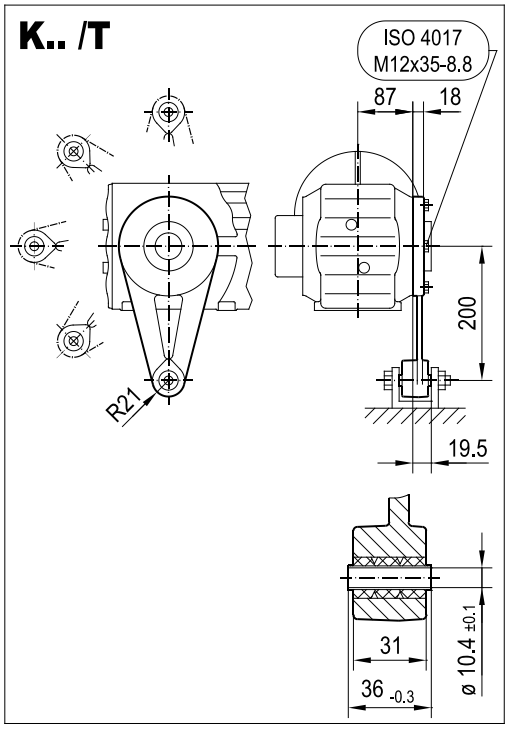

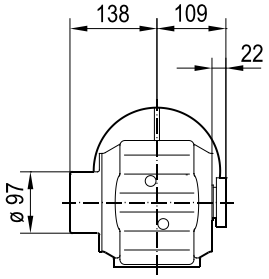

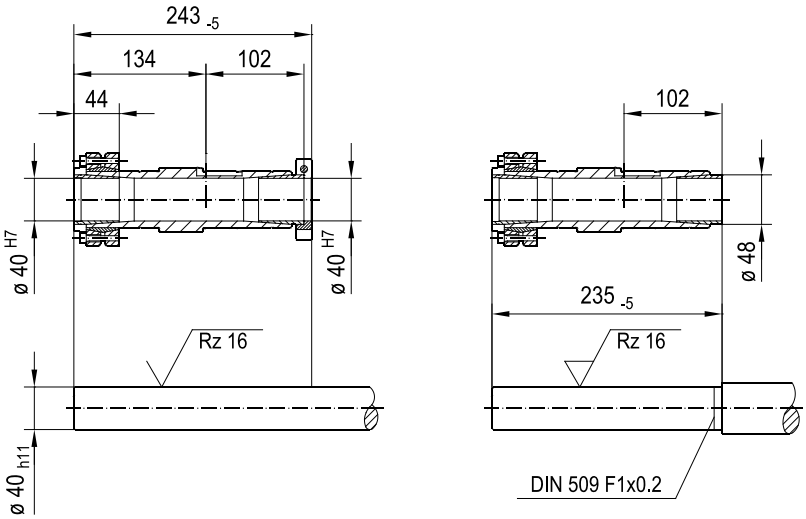

(→ 📖 4.1)	DRN											
	71MS	71M	80MK	80MS	80M	90S	90L	100LS	100L/LM	112M	132S	132M
AC	139	139	156	156	156	179	179	197	197	221	221	261
AD	118	118	128	128	128	140	140	157	157	170	170	228
ADS	129	129	139	139	139	150	150	158	158	172	172	228
L	498	518	529	546	575	577	609	604	654	685	735	753
LS	566	586	610	627	656	670	702	698	748	797	847	891
LB	192	212	223	240	269	271	303	298	348	379	429	447
LBS	260	280	304	321	350	364	396	392	442	491	541	585

33 047 00 14

K57..

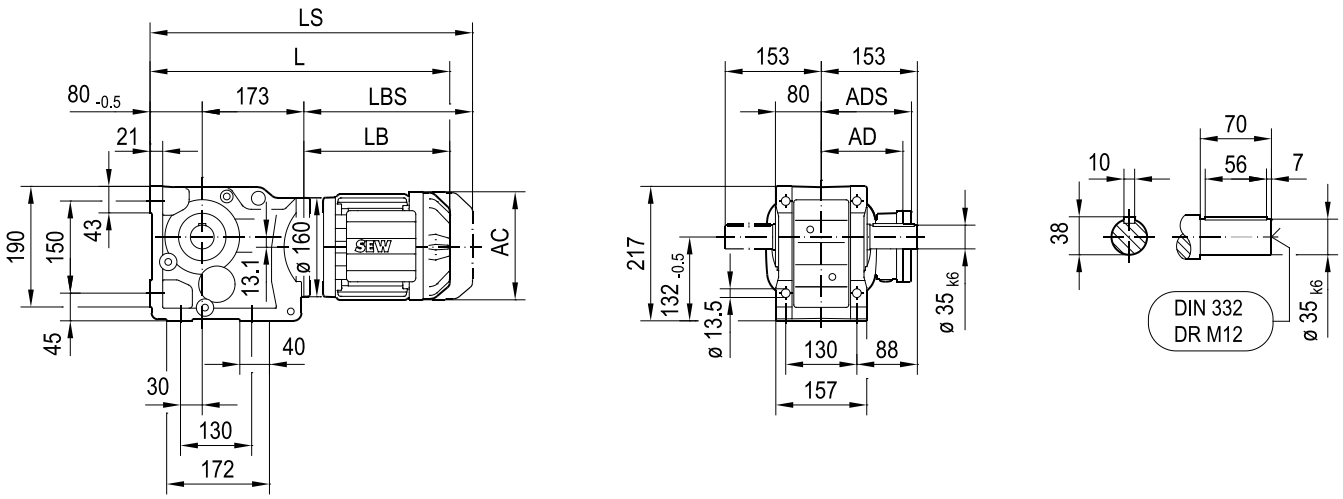

KA57B..

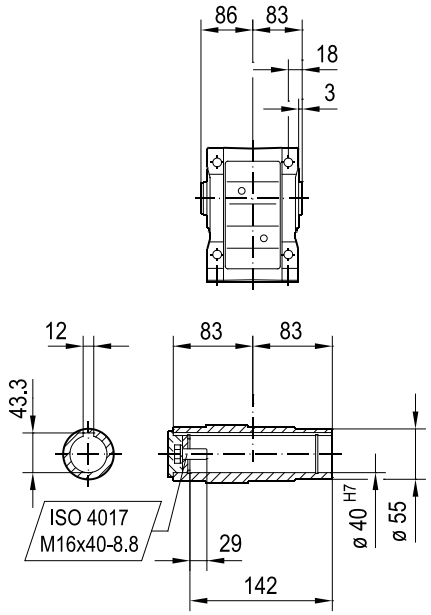

KH57B..

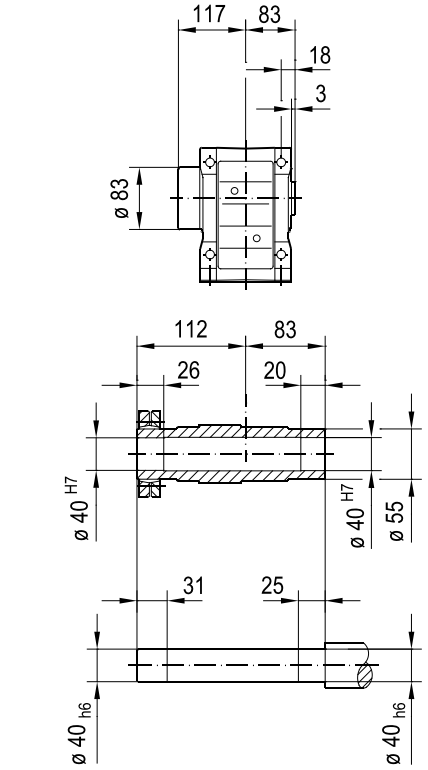

KV57B..

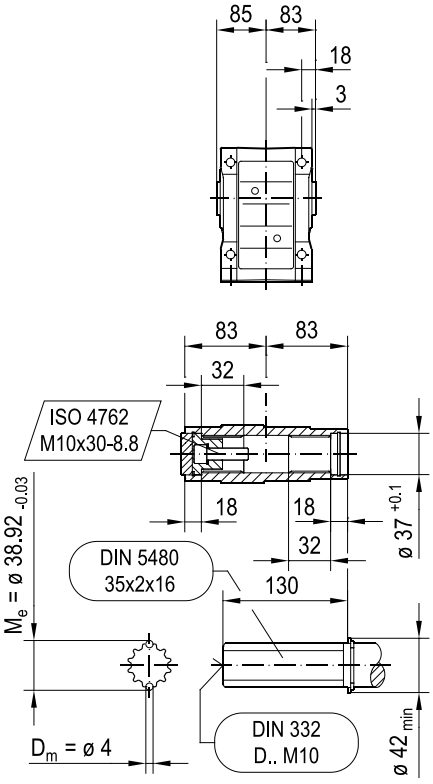

(→ 4.1)	DRN													
	63MS	63M	71MS	71M	80MK	80MS	80M	90S	90L	100LS	100L/LM	112M	132S	132M
AC	115	115	139	139	156	156	156	179	179	197	197	221	221	261
AD	98	98	118	118	128	128	128	140	140	157	157	170	170	228
ADS	98	98	129	129	139	139	139	150	150	158	158	172	172	228
L	437	451	452	472	483	500	529	531	563	558	608	639	693	711
LS	493	507	520	540	564	581	610	624	656	652	702	751	805	849
LB	184	198	199	219	230	247	276	278	310	305	355	386	440	458
LBS	240	254	267	287	311	328	357	371	403	399	449	498	552	596

33 048 00 14

KF57..

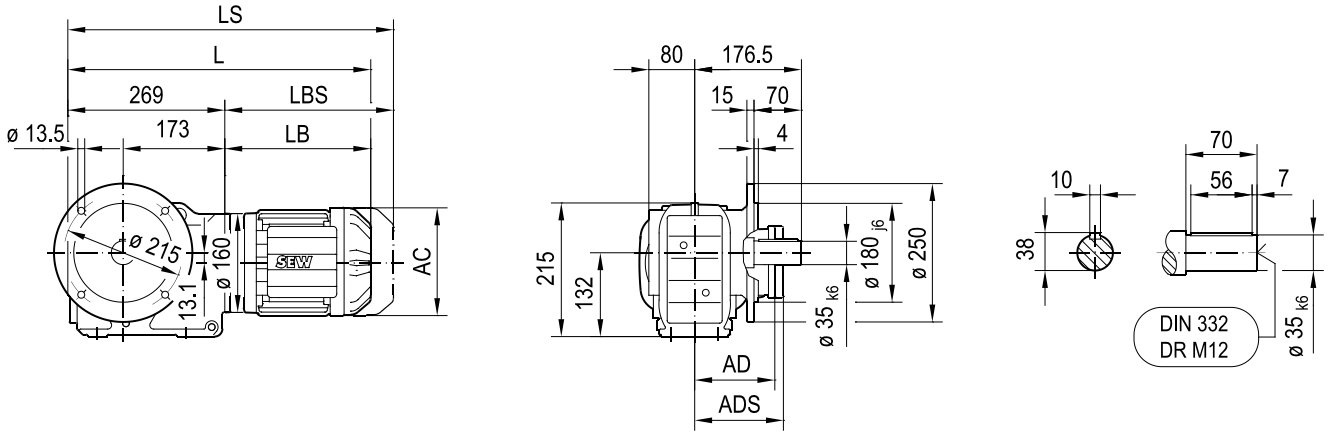

KAF57..

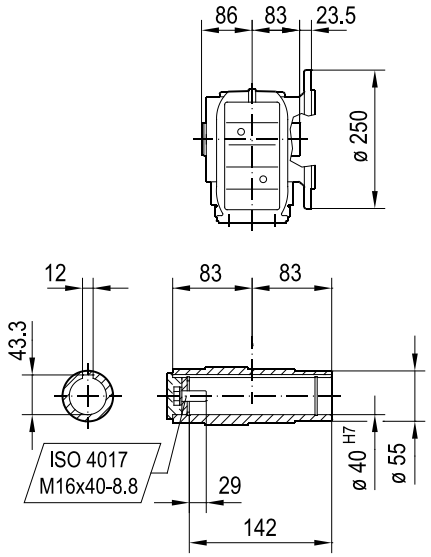

KHF57..

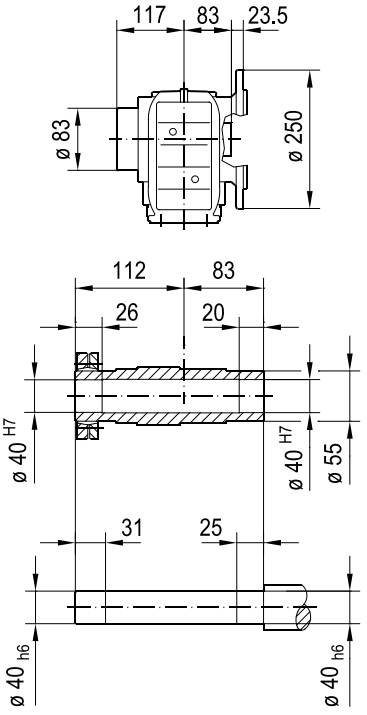

KVF57..

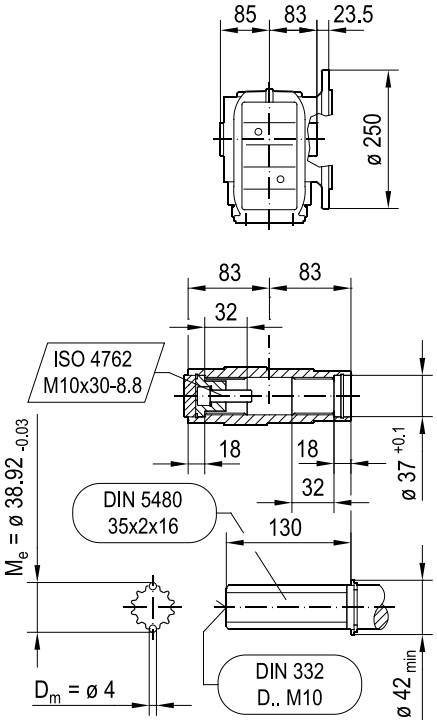

(→ 📖 4.1)	DRN													
	63MS	63M	71MS	71M	80MK	80MS	80M	90S	90L	100LS	100L/LM	112M	132S	132M
AC	115	115	139	139	156	156	156	179	179	197	197	221	221	261
AD	98	98	118	118	128	128	128	140	140	157	157	170	170	228
ADS	98	98	129	129	139	139	139	150	150	158	158	172	172	228
L	453	467	468	488	499	516	545	547	579	574	624	655	709	727
LS	509	523	536	556	580	597	626	640	672	668	718	767	821	865
LB	184	198	199	219	230	247	276	278	310	305	355	386	440	458
LBS	240	254	267	287	311	328	357	371	403	399	449	498	552	596

33 049 00 14

KA57..

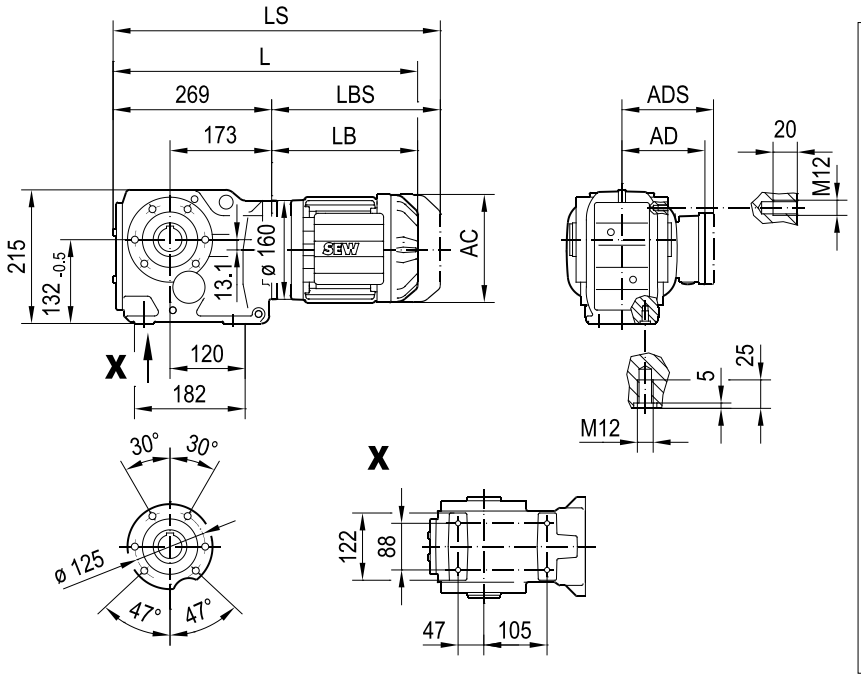

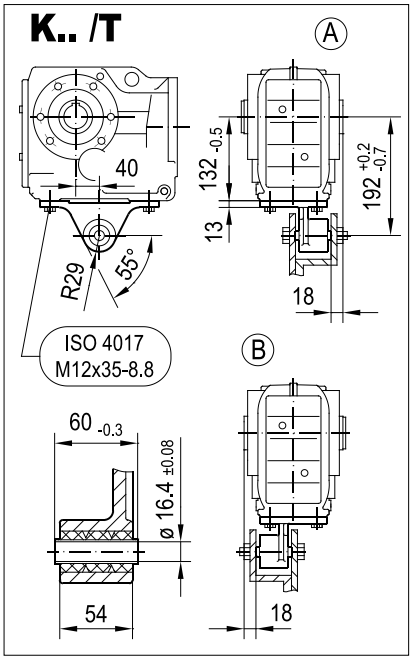

KA57..

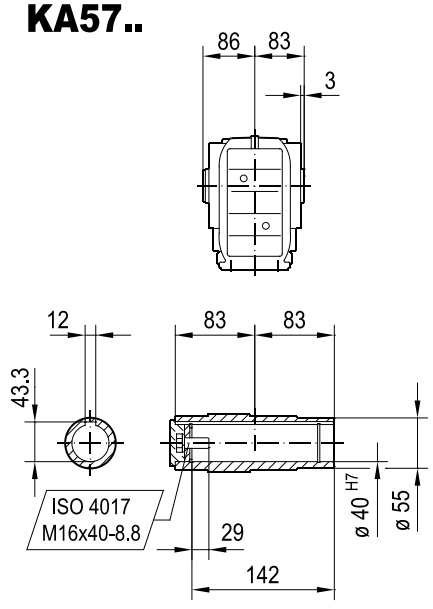

KH57..

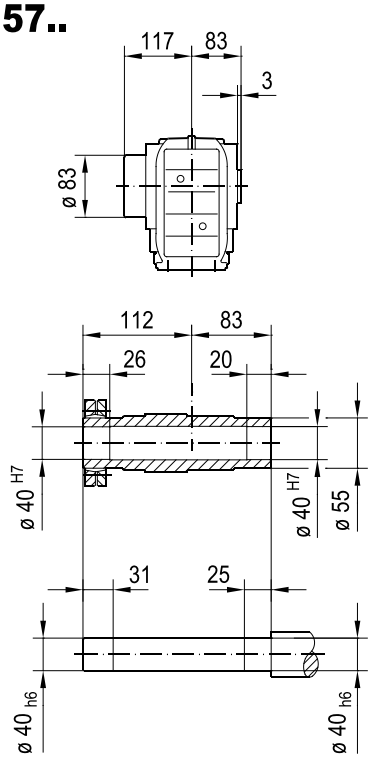

KV57..

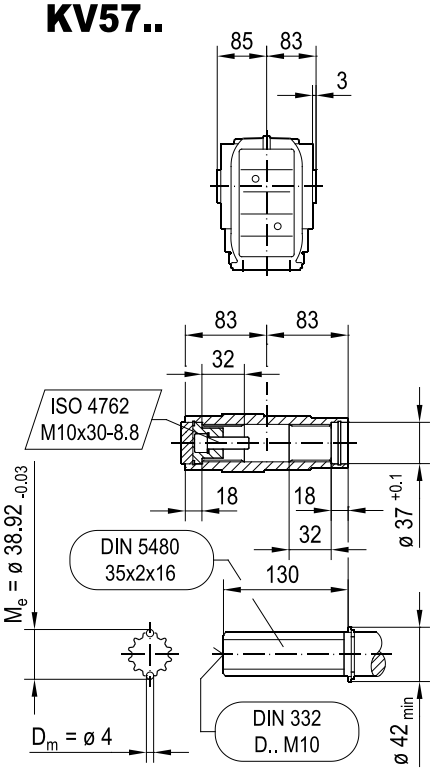

(→ 4.1)	DRN													
	63MS	63M	71MS	71M	80MK	80MS	80M	90S	90L	100LS	100L/LM	112M	132S	132M
AC	115	115	139	139	156	156	156	179	179	197	197	221	221	261
AD	98	98	118	118	128	128	128	140	140	157	157	170	170	228
ADS	98	98	129	129	139	139	139	150	150	158	158	172	172	228
L	453	467	468	488	499	516	545	547	579	574	624	655	709	727
LS	509	523	536	556	580	597	626	640	672	668	718	767	821	865
LB	184	198	199	219	230	247	276	278	310	305	355	386	440	458
LBS	240	254	267	287	311	328	357	371	403	399	449	498	552	596

KAZ57..

33 050 00 14

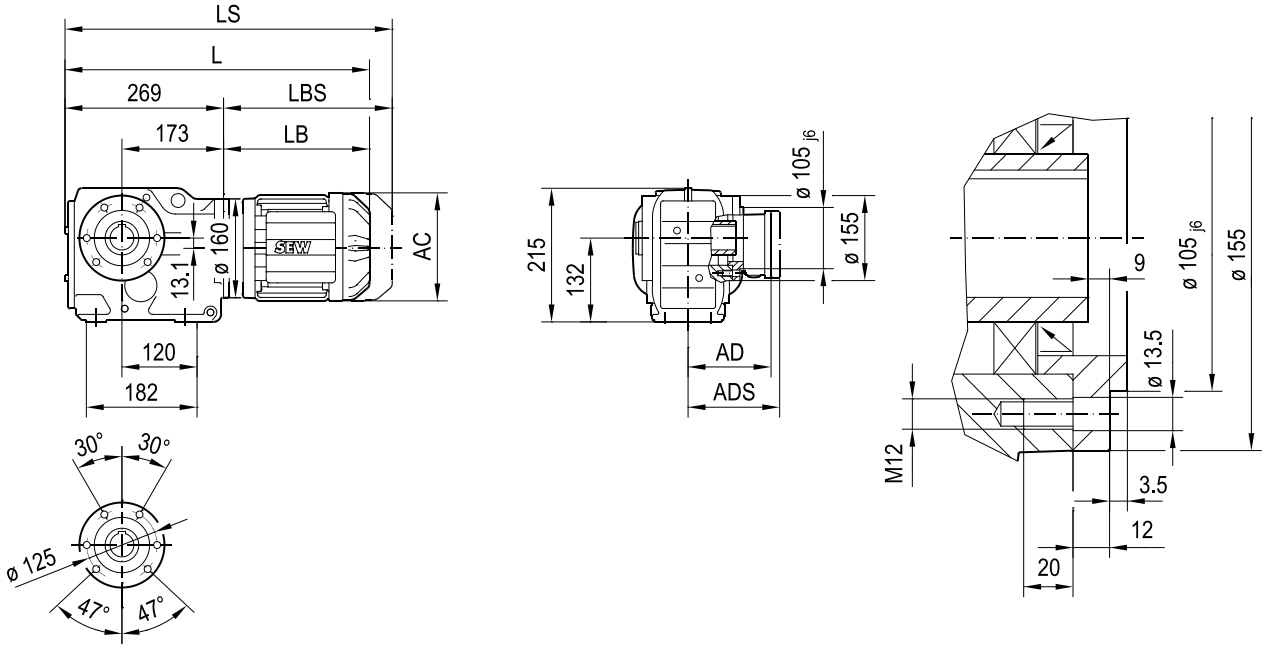

KAZ57..

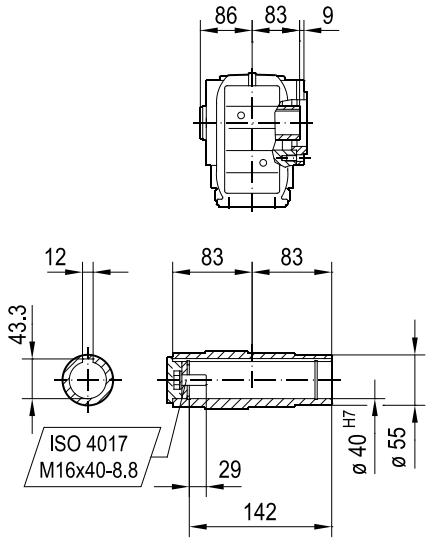

KHZ57..

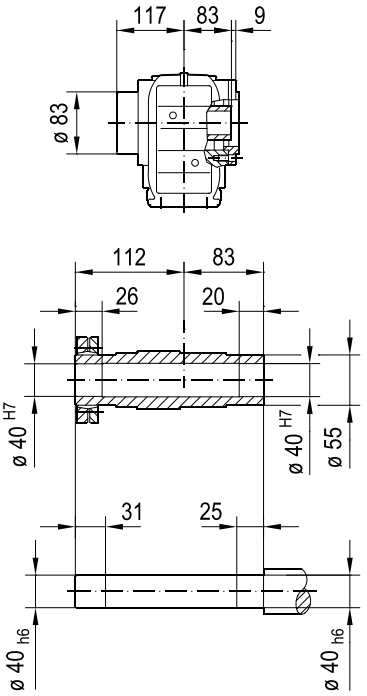

KVZ57..

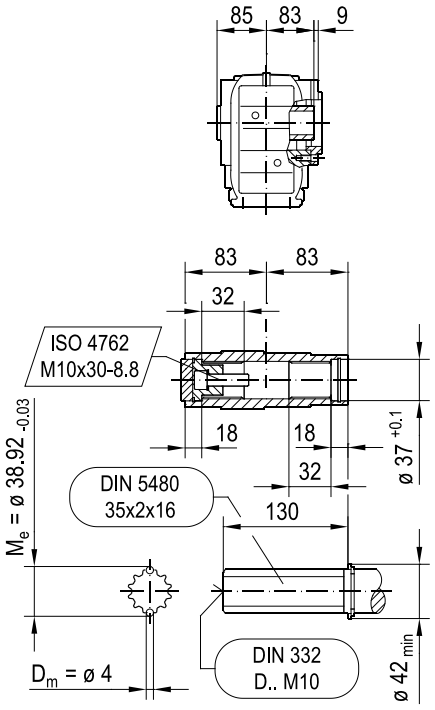

(→ 📖 4.1)	DRN													
	63MS	63M	71MS	71M	80MK	80MS	80M	90S	90L	100LS	100L/LM	112M	132S	132M
AC	115	115	139	139	156	156	156	179	179	197	197	221	221	261
AD	98	98	118	118	128	128	128	140	140	157	157	170	170	228
ADS	98	98	129	129	139	139	139	150	150	158	158	172	172	228
L	453	467	468	488	499	516	545	547	579	574	624	655	709	727
LS	509	523	536	556	580	597	626	640	672	668	718	767	821	865
LB	184	198	199	219	230	247	276	278	310	305	355	386	440	458
LBS	240	254	267	287	311	328	357	371	403	399	449	498	552	596

KZ57..

33 234 01 15

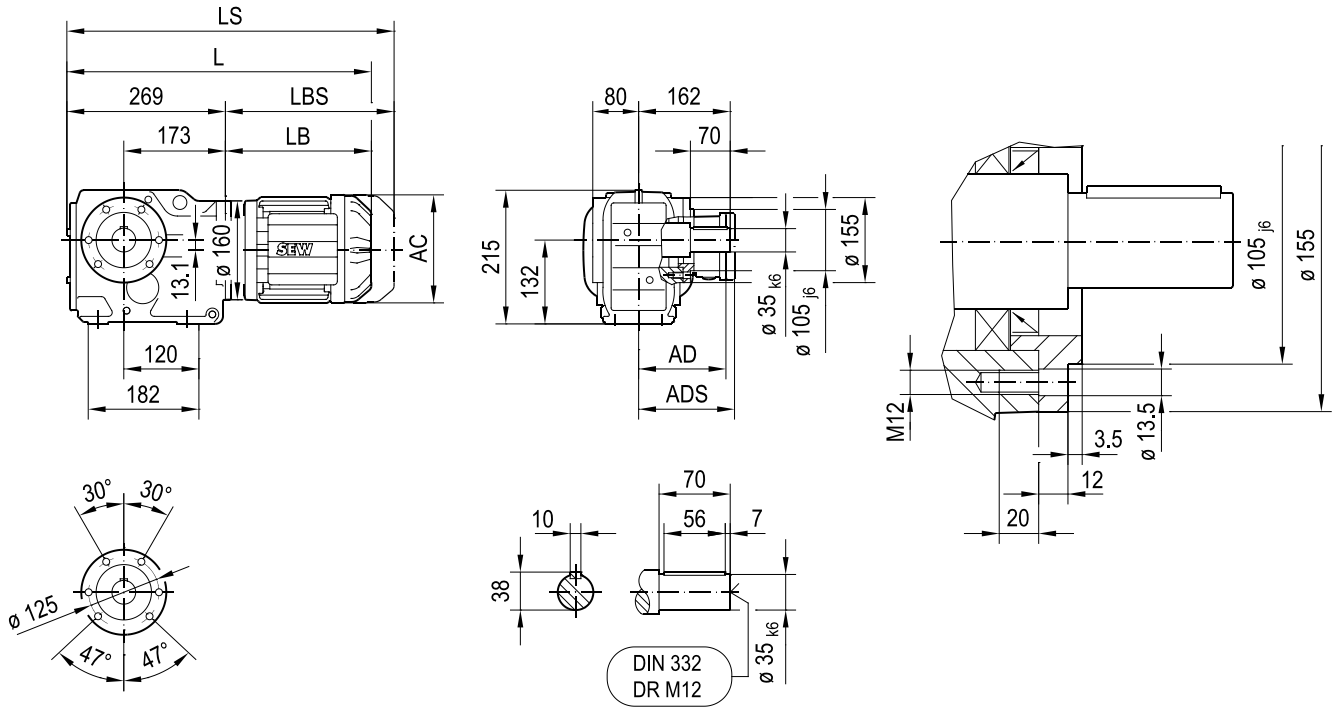

(→ 📖 4.1)	DRN													
	63MS	63M	71MS	71M	80MK	80MS	80M	90S	90L	100LS	100L/LM	112M	132S	132M
AC	115	115	139	139	156	156	156	179	179	197	197	221	221	261
AD	98	98	118	118	128	128	128	140	140	157	157	170	170	228
ADS	98	98	129	129	139	139	139	150	150	158	158	172	172	228
L	453	467	468	488	499	516	545	547	579	574	624	655	709	727
LS	509	523	536	556	580	597	626	640	672	668	718	767	821	865
LB	184	198	199	219	230	247	276	278	310	305	355	386	440	458
LBS	240	254	267	287	311	328	357	371	403	399	449	498	552	596

KT57..

33 051 02 14

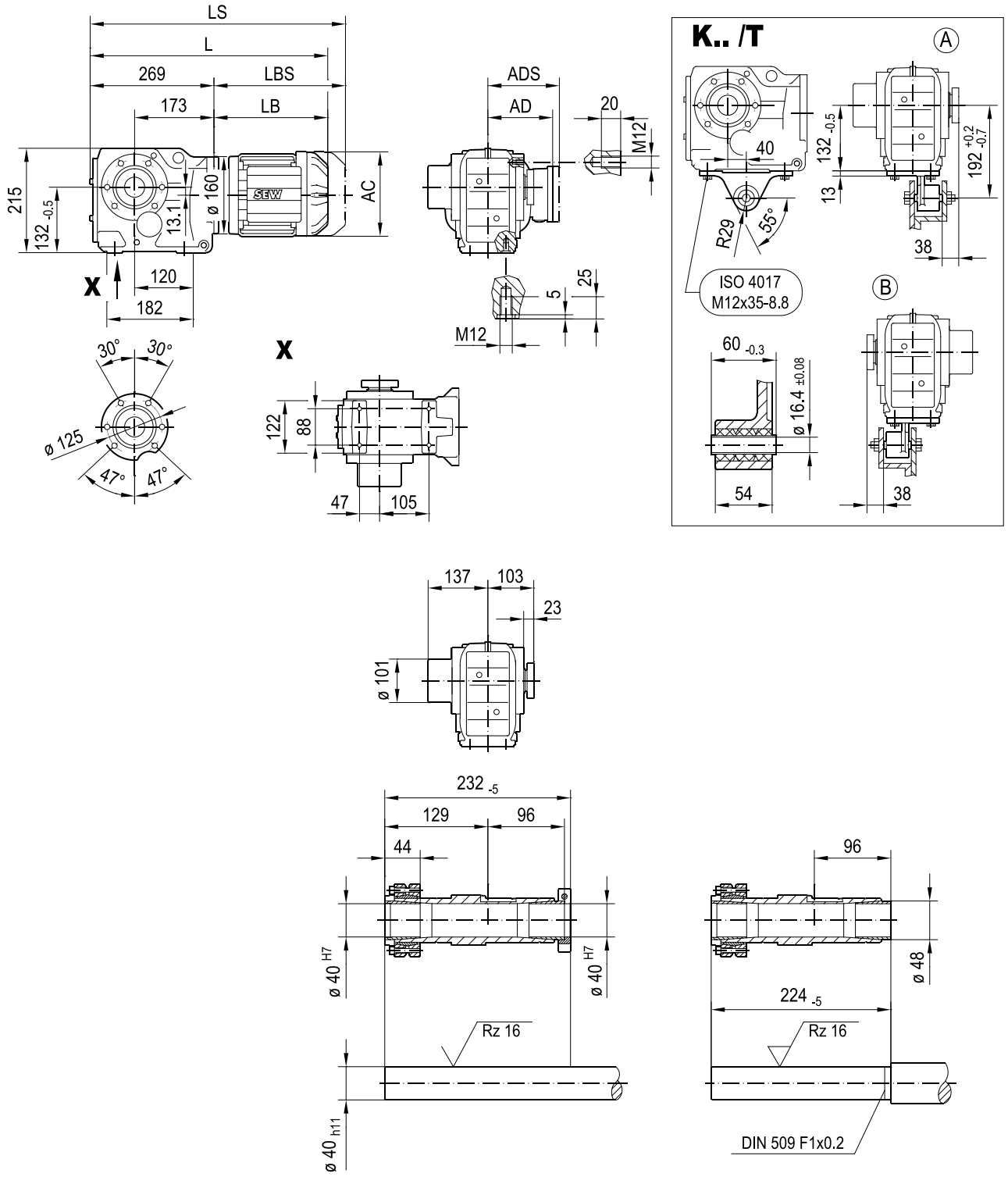

(→ 📖 4.1)	DRN													
	63MS	63M	71MS	71M	80MK	80MS	80M	90S	90L	100LS	100L/LM	112M	132S	132M
AC	115	115	139	139	156	156	156	179	179	197	197	221	221	261
AD	98	98	118	118	128	128	128	140	140	157	157	170	170	228
ADS	98	98	129	129	139	139	139	150	150	158	158	172	172	228
L	453	467	468	488	499	516	545	547	579	574	624	655	709	727
LS	509	523	536	556	580	597	626	640	672	668	718	767	821	865
LB	184	198	199	219	230	247	276	278	310	305	355	386	440	458
LBS	240	254	267	287	311	328	357	371	403	399	449	498	552	596

33 052 00 14

K67..

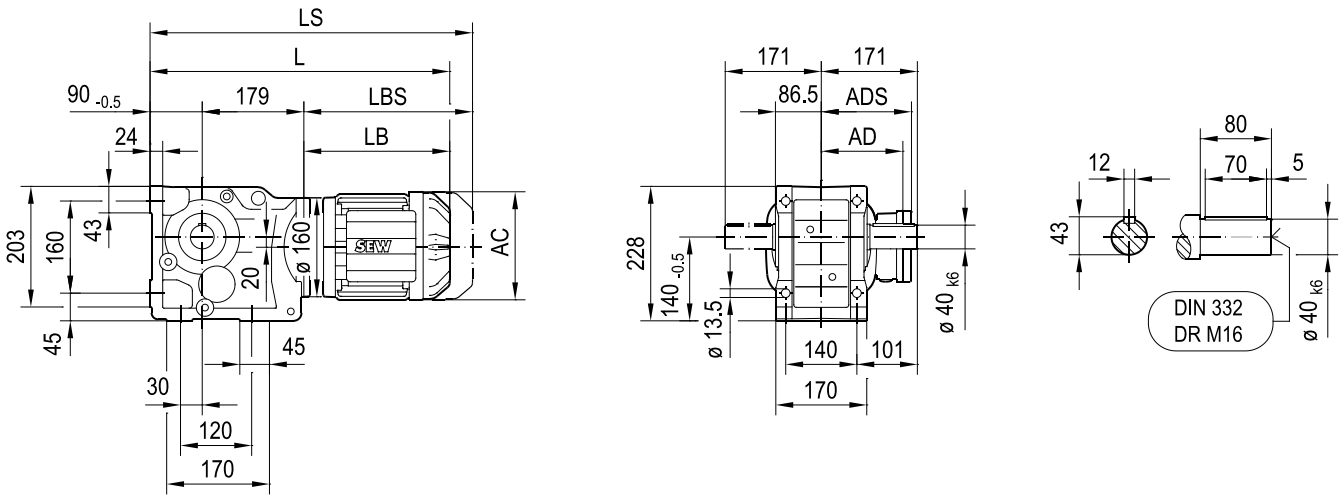

KA67B..

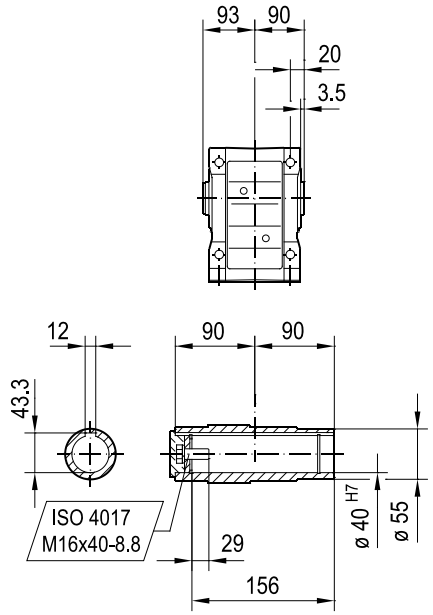

KH67B..

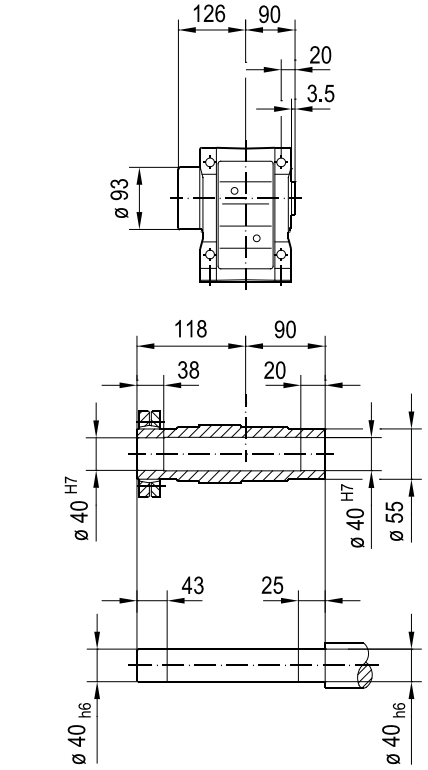

KV67B..

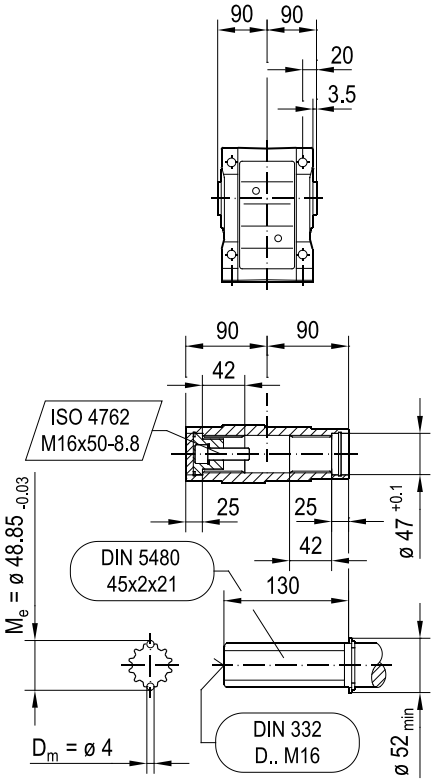

(→ 4.1)	DRN												
	63M	71MS	71M	80MK	80MS	80M	90S	90L	100LS	100L/LM	112M	132S	132M
AC	115	139	139	156	156	156	179	179	197	197	221	221	261
AD	98	118	118	128	128	128	140	140	157	157	170	170	228
ADS	98	129	129	139	139	139	150	150	158	158	172	172	228
L	467	468	488	499	516	545	547	579	574	624	655	709	727
LS	523	536	556	580	597	626	640	672	668	718	767	821	865
LB	198	199	219	230	247	276	278	310	305	355	386	440	458
LBS	254	267	287	311	328	357	371	403	399	449	498	552	596

33 053 00 14

KF67..

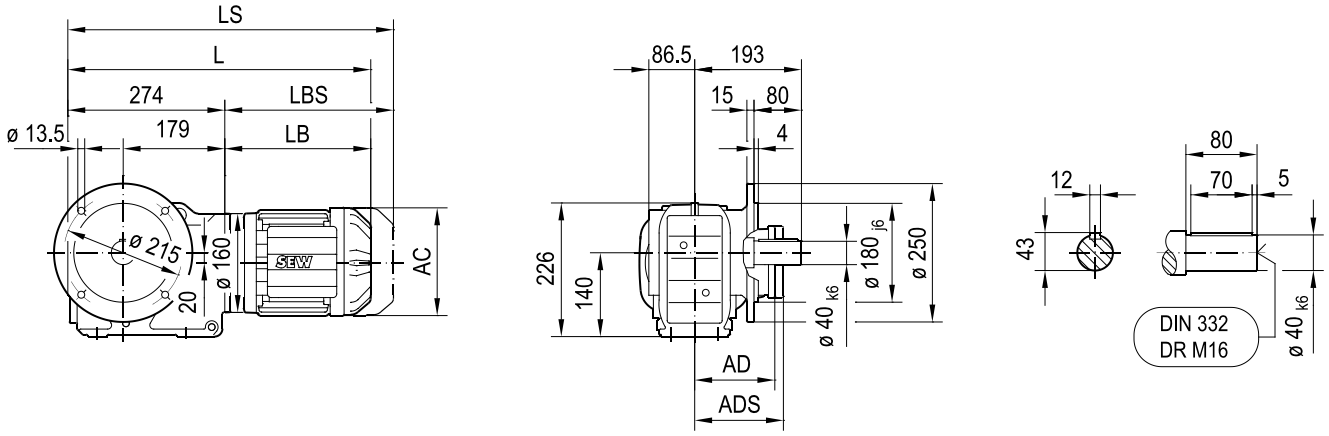

KAF67..

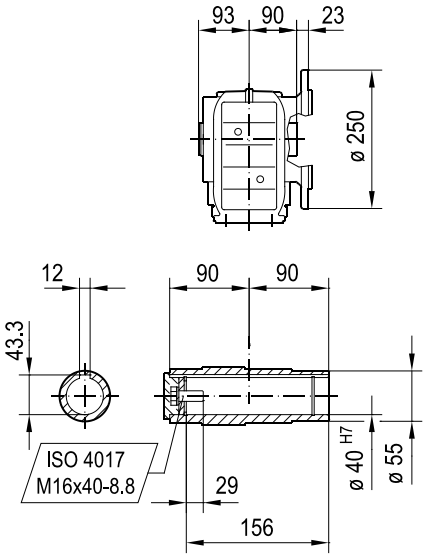

KHF67..

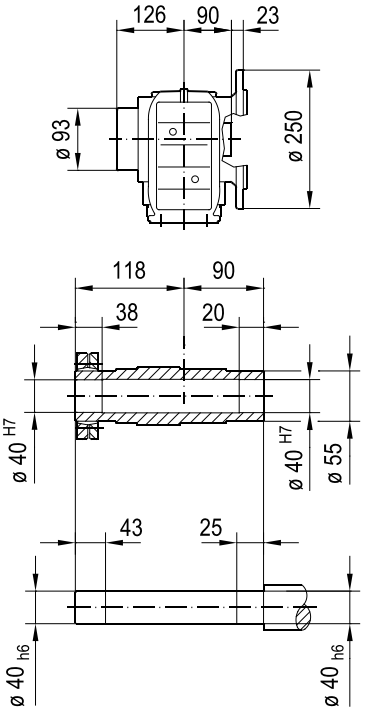

KVF67..

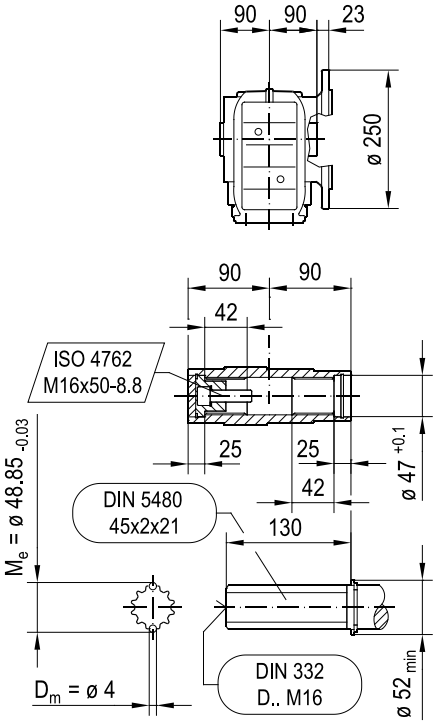

(→ 📖 4.1)	DRN												
	63M	71MS	71M	80MK	80MS	80M	90S	90L	100LS	100L/LM	112M	132S	132M
AC	115	139	139	156	156	156	179	179	197	197	221	221	261
AD	98	118	118	128	128	128	140	140	157	157	170	170	228
ADS	98	129	129	139	139	139	150	150	158	158	172	172	228
L	472	473	493	504	521	550	552	584	579	629	660	714	732
LS	528	541	561	585	602	631	645	677	673	723	772	826	870
LB	198	199	219	230	247	276	278	310	305	355	386	440	458
LBS	254	267	287	311	328	357	371	403	399	449	498	552	596

33 270 00 17

KM67..

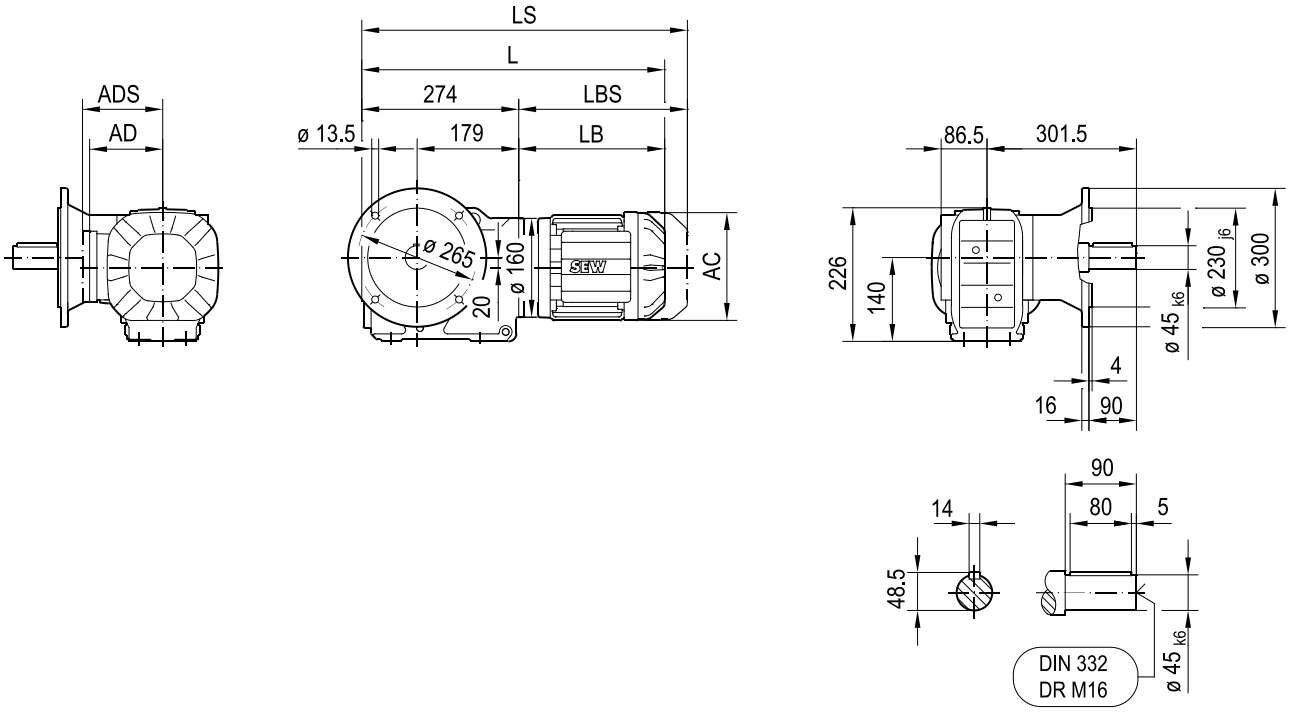

KAM67..

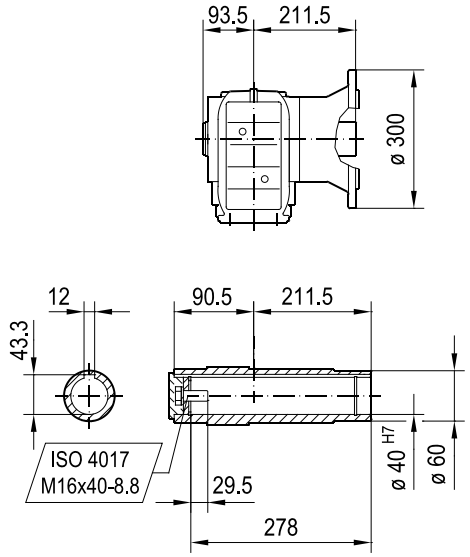

(→ 📖 4.1)	DRN												
	63M	71MS	71M	80MK	80MS	80M	90S	90L	100LS	100L/LM	112M	132S	132M
AC	115	139	139	156	156	156	179	179	197	197	221	221	261
AD	98	118	118	128	128	128	140	140	157	157	170	170	228
ADS	98	129	129	139	139	139	150	150	158	158	172	172	228
L	472	473	493	504	521	550	552	584	579	629	660	714	732
LS	528	541	561	585	602	631	645	677	673	723	772	826	870
LB	198	199	219	230	247	276	278	310	305	355	386	440	458
LBS	254	267	287	311	328	357	371	403	399	449	498	552	596

33 054 00 14

KA67..

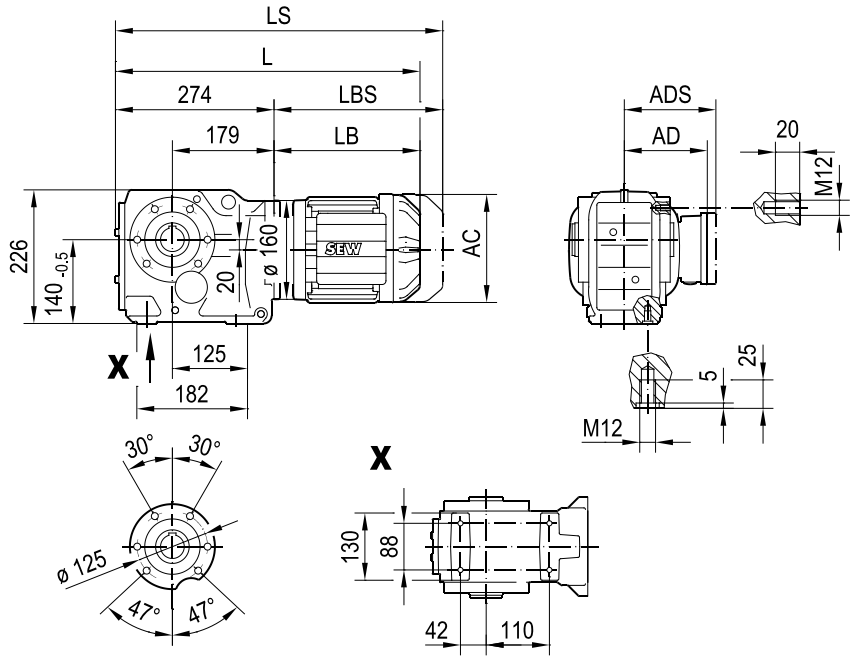

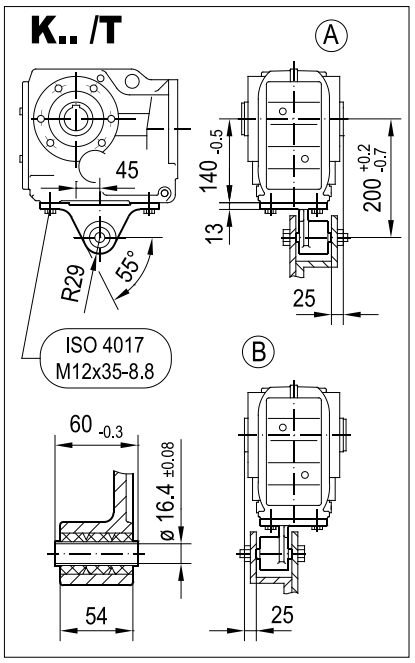

KA67..

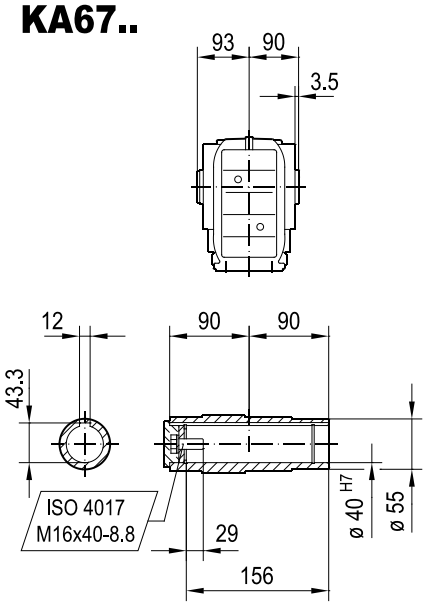

KH67..

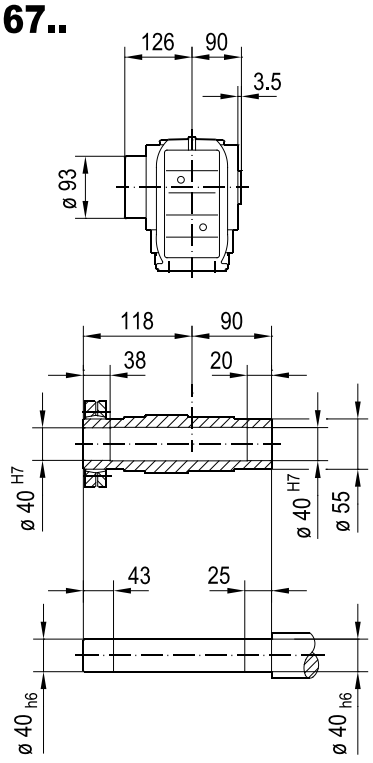

KV67..

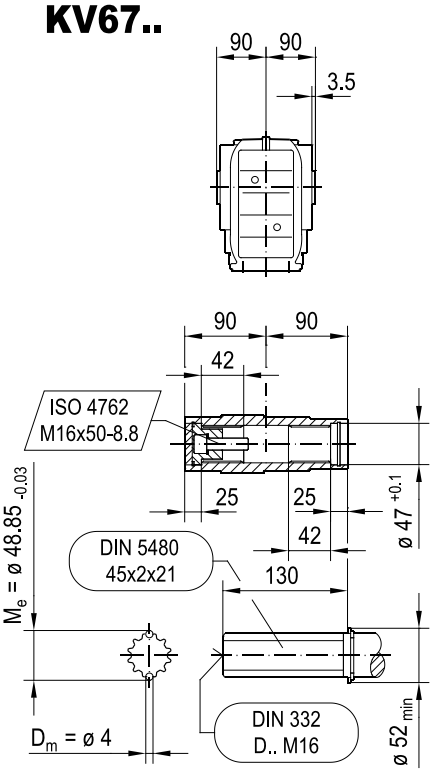

(→ 📖 4.1)	DRN												
	63M	71MS	71M	80MK	80MS	80M	90S	90L	100LS	100L/LM	112M	132S	132M
AC	115	139	139	156	156	156	179	179	197	197	221	221	261
AD	98	118	118	128	128	128	140	140	157	157	170	170	228
ADS	98	129	129	139	139	139	150	150	158	158	172	172	228
L	472	473	493	504	521	550	552	584	579	629	660	714	732
LS	528	541	561	585	602	631	645	677	673	723	772	826	870
LB	198	199	219	230	247	276	278	310	305	355	386	440	458
LBS	254	267	287	311	328	357	371	403	399	449	498	552	596

33 055 00 14

KAZ67..

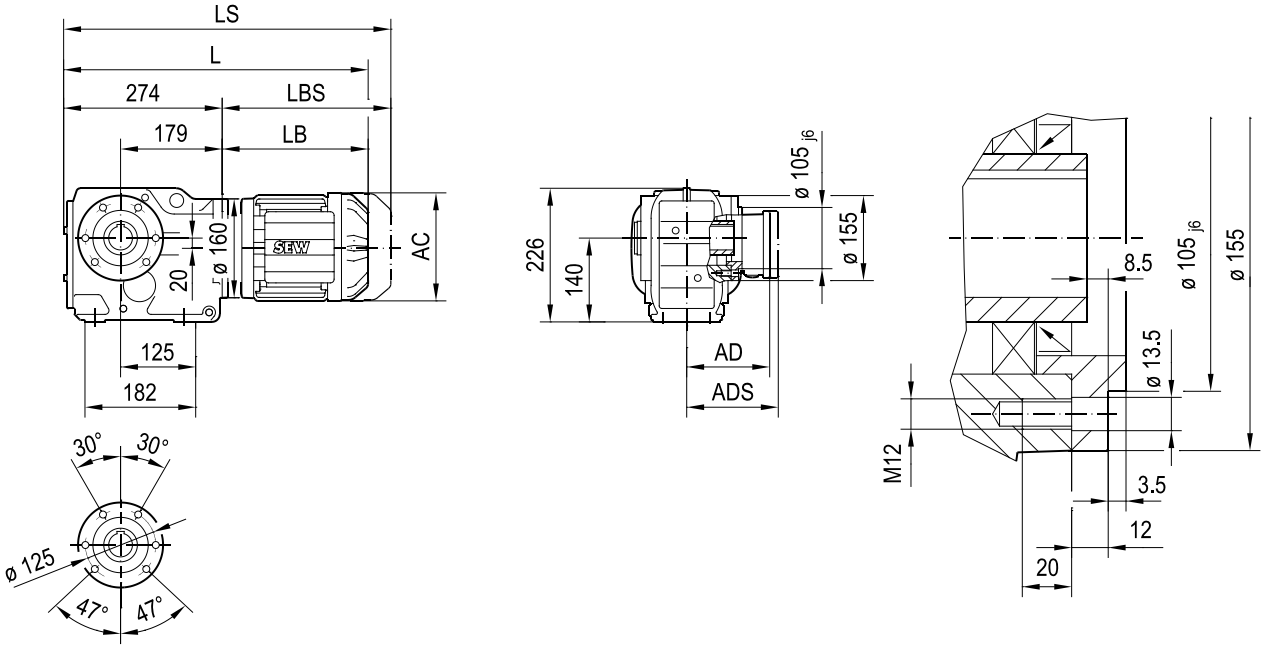

KAZ67..

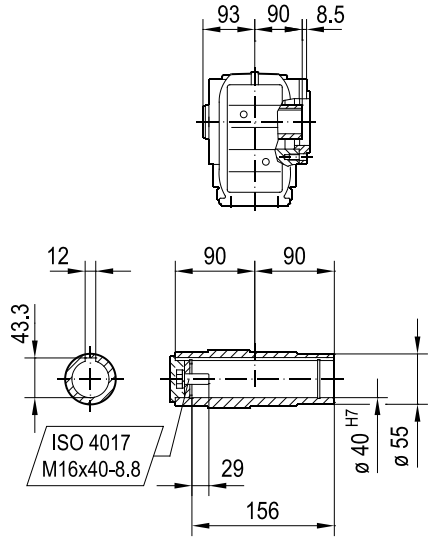

KHZ67..

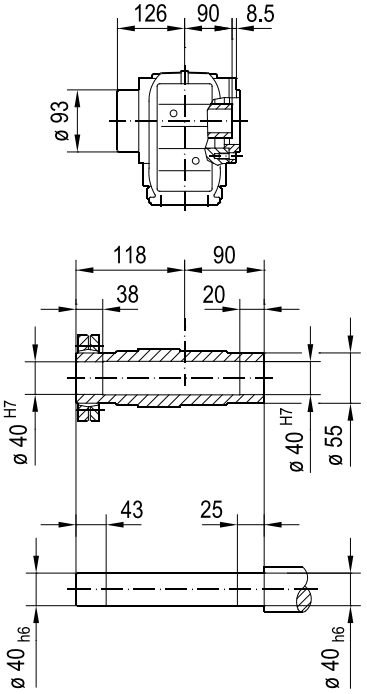

KVZ67..

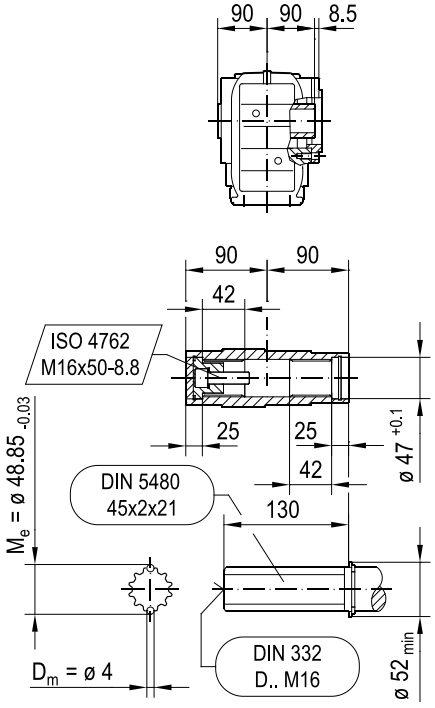

(→ 📖 4.1)	DRN												
	63M	71MS	71M	80MK	80MS	80M	90S	90L	100LS	100L/LM	112M	132S	132M
AC	115	139	139	156	156	156	179	179	197	197	221	221	261
AD	98	118	118	128	128	128	140	140	157	157	170	170	228
ADS	98	129	129	139	139	139	150	150	158	158	172	172	228
L	472	473	493	504	521	550	552	584	579	629	660	714	732
LS	528	541	561	585	602	631	645	677	673	723	772	826	870
LB	198	199	219	230	247	276	278	310	305	355	386	440	458
LBS	254	267	287	311	328	357	371	403	399	449	498	552	596

KZ67..

33 235 00 15

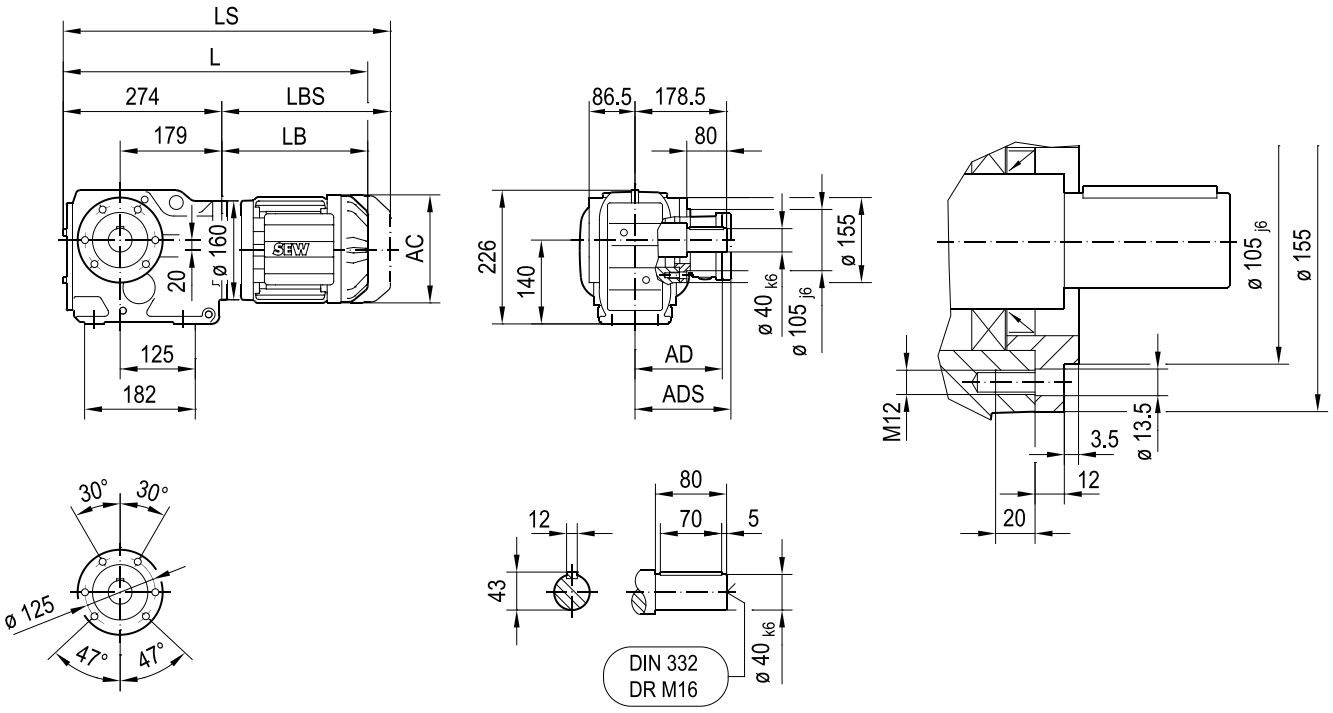

(→ 📖 4.1)	DRN												
	63M	71MS	71M	80MK	80MS	80M	90S	90L	100LS	100L/LM	112M	132S	132M
AC	115	139	139	156	156	156	179	179	197	197	221	221	261
AD	98	118	118	128	128	128	140	140	157	157	170	170	228
ADS	98	129	129	139	139	139	150	150	158	158	172	172	228
L	472	473	493	504	521	550	552	584	579	629	660	714	732
LS	528	541	561	585	602	631	645	677	673	723	772	826	870
LB	198	199	219	230	247	276	278	310	305	355	386	440	458
LBS	254	267	287	311	328	357	371	403	399	449	498	552	596

KT67..

33 056 02 14

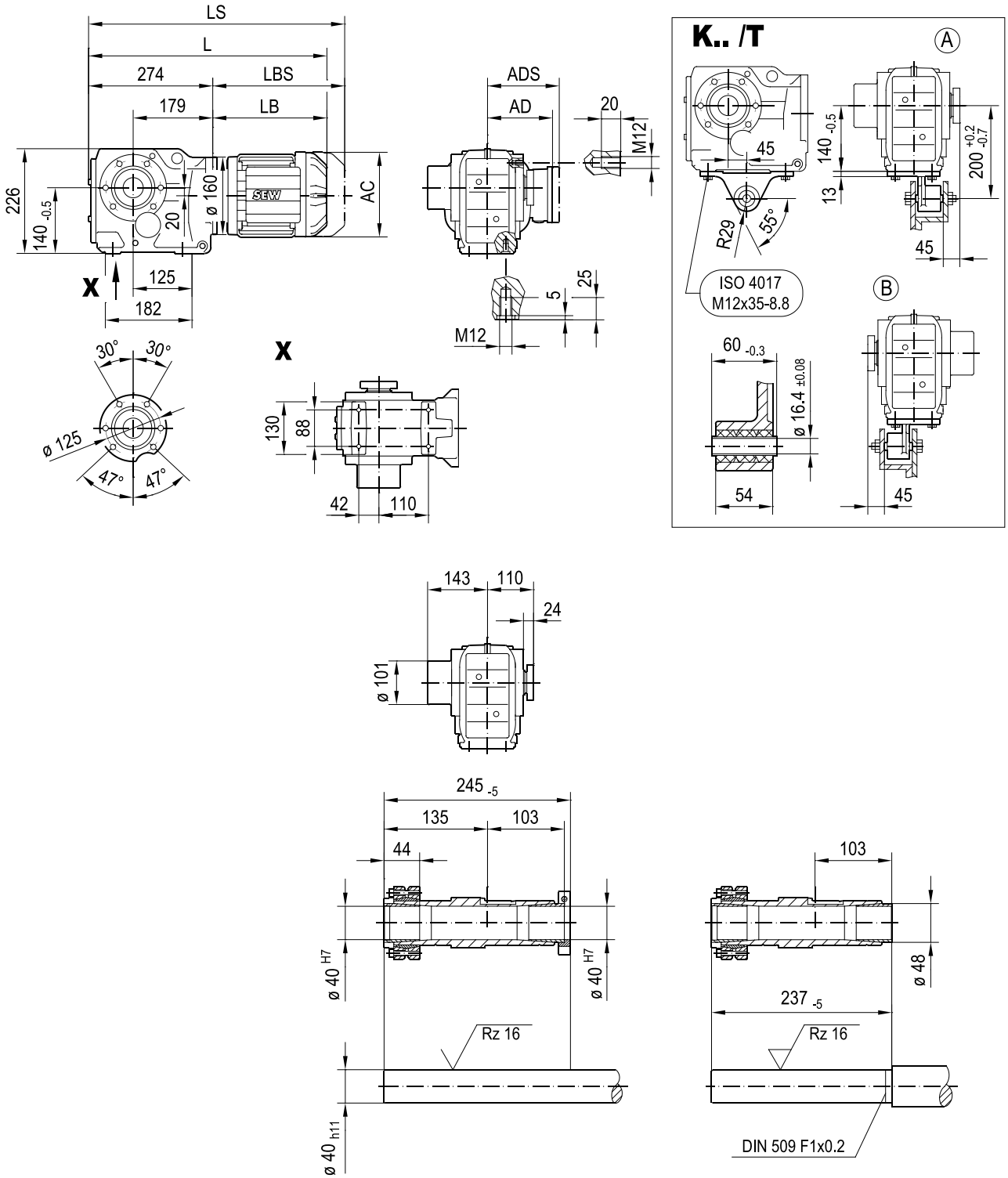

(→ 📖 4.1)	DRN												
	63M	71MS	71M	80MK	80MS	80M	90S	90L	100LS	100L/LM	112M	132S	132M
AC	115	139	139	156	156	156	179	179	197	197	221	221	261
AD	98	118	118	128	128	128	140	140	157	157	170	170	228
ADS	98	129	129	139	139	139	150	150	158	158	172	172	228
L	472	473	493	504	521	550	552	584	579	629	660	714	732
LS	528	541	561	585	602	631	645	677	673	723	772	826	870
LB	198	199	219	230	247	276	278	310	305	355	386	440	458
LBS	254	267	287	311	328	357	371	403	399	449	498	552	596

33 057 00 14

K77..

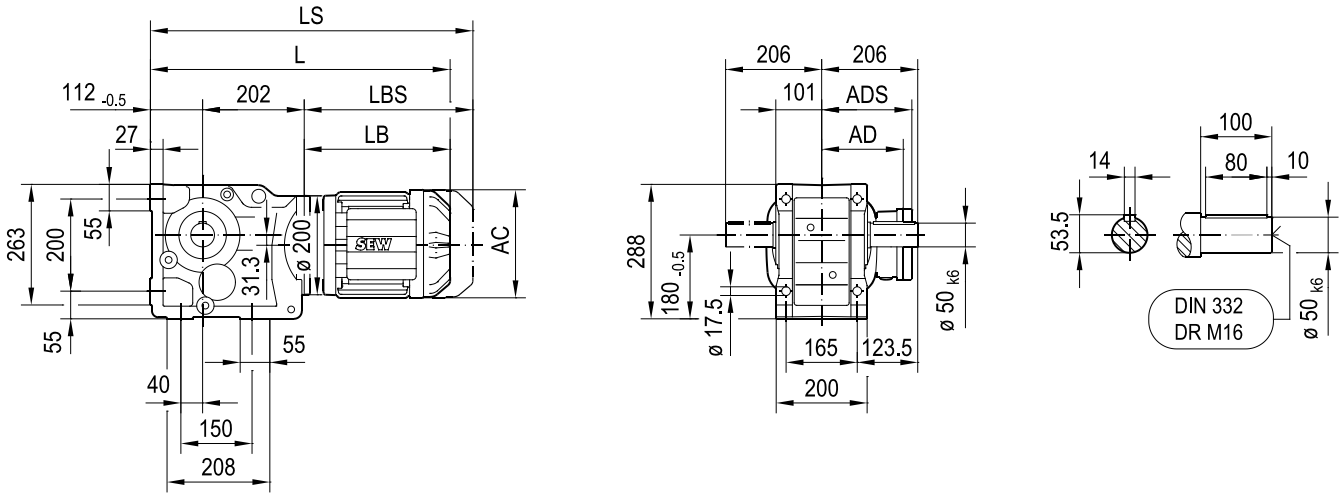

KA77B..

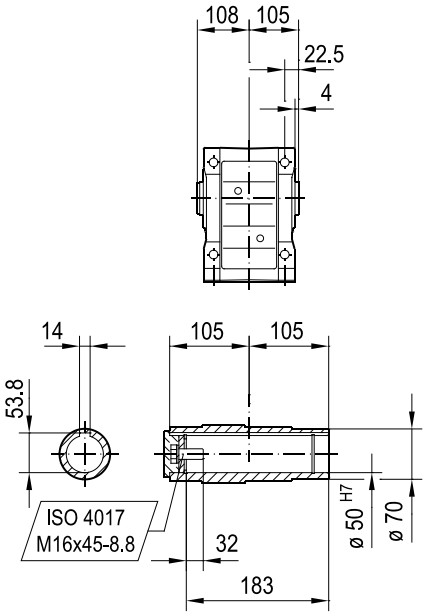

KH77B..

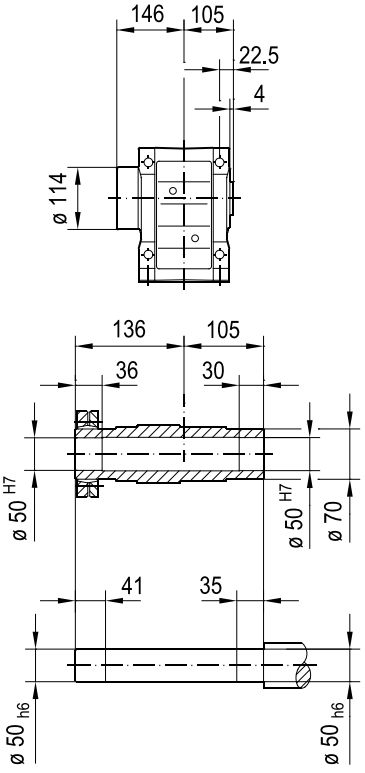

KV77B..

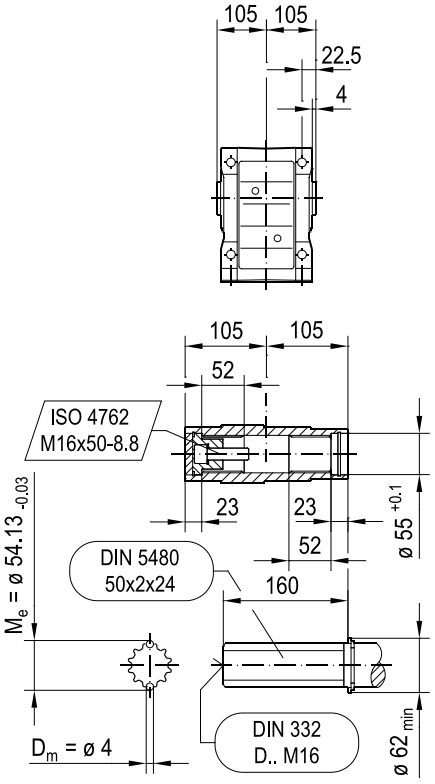

(→ 📖 4.1)	DRN												
	71M	80MK	80MS	80M	90S	90L	100LS	100L/LM	112M	132S	132M	132L	160..
AC	139	156	156	156	179	179	197	197	221	221	261	261	314
AD	118	128	128	128	140	140	157	157	170	170	228	228	253
ADS	129	139	139	139	150	150	158	158	172	172	228	228	253
L	526	537	554	583	585	617	612	662	693	743	761	787	853
LS	594	618	635	664	678	710	706	756	805	855	899	924	1042
LB	212	223	240	269	271	303	298	348	379	429	447	473	539
LBS	280	304	321	350	364	396	392	442	491	541	585	610	728

33 058 00 14

KF77..

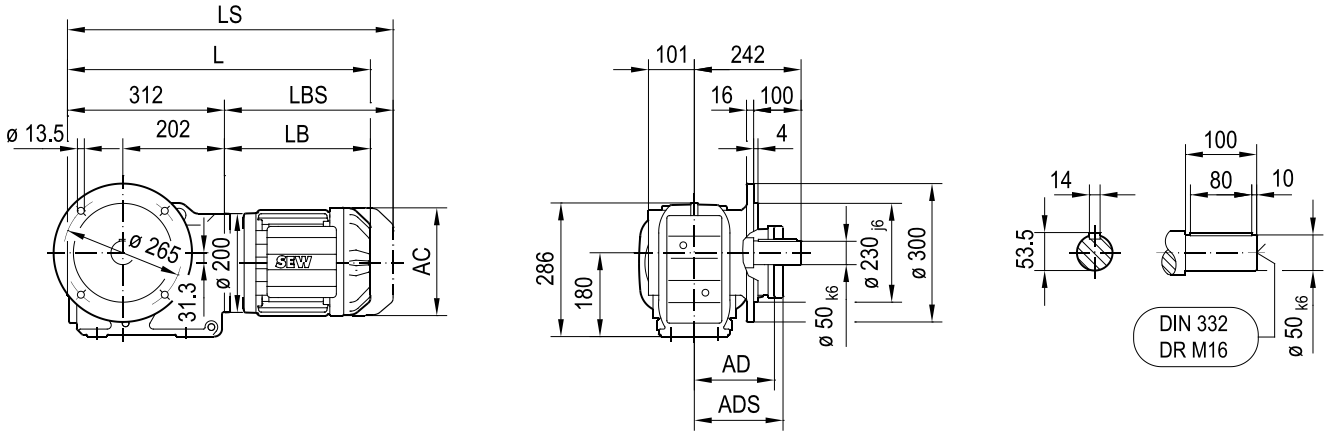

KAF77..

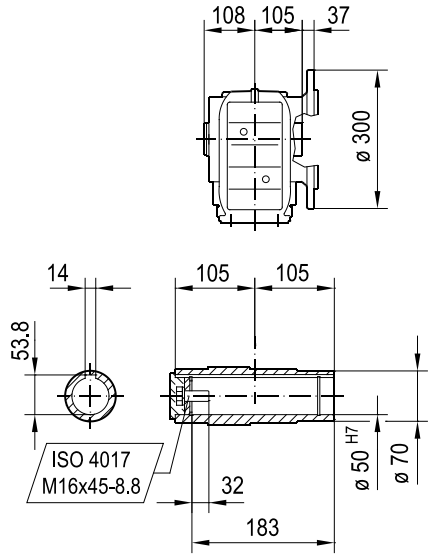

KHF77..

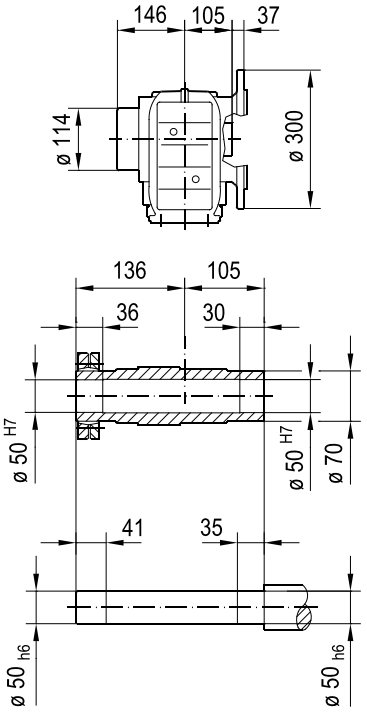

KVF77..

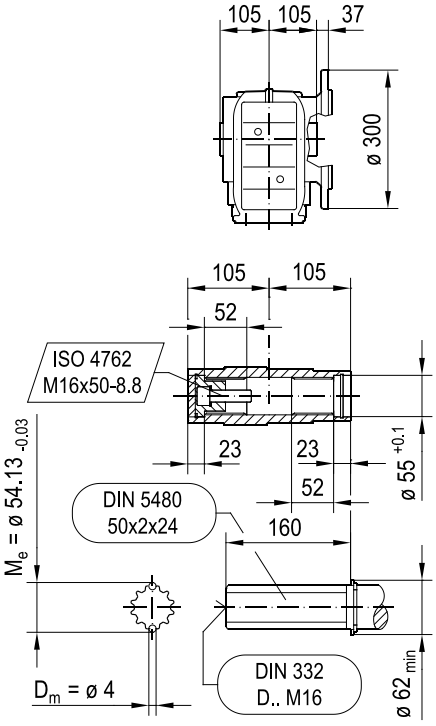

(→ 4.1)	DRN												
	71M	80MK	80MS	80M	90S	90L	100LS	100L/LM	112M	132S	132M	132L	160..
AC	139	156	156	156	179	179	197	197	221	221	261	261	314
AD	118	128	128	128	140	140	157	157	170	170	228	228	253
ADS	129	139	139	139	150	150	158	158	172	172	228	228	253
L	524	535	552	581	583	615	610	660	691	741	759	785	851
LS	592	616	633	662	676	708	704	754	803	853	897	922	1040
LB	212	223	240	269	271	303	298	348	379	429	447	473	539
LBS	280	304	321	350	364	396	392	442	491	541	585	610	728

KM77..

33 271 01 17

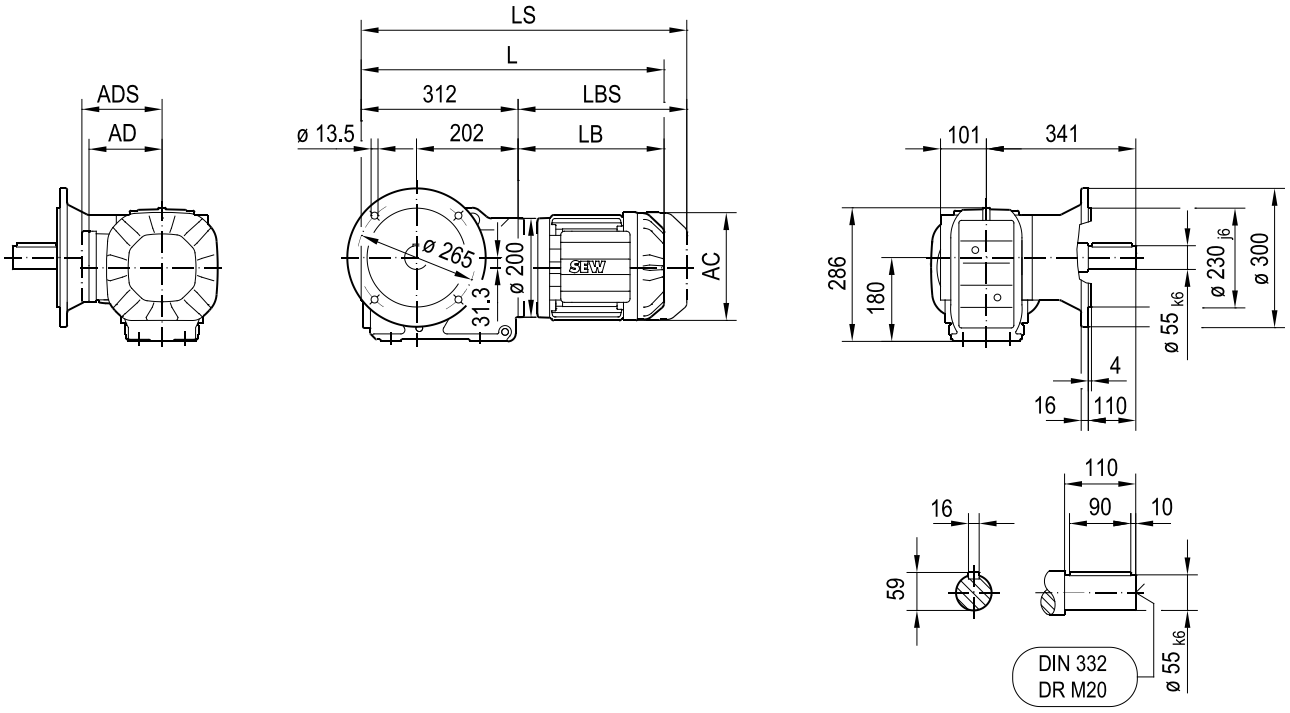

KAM77..

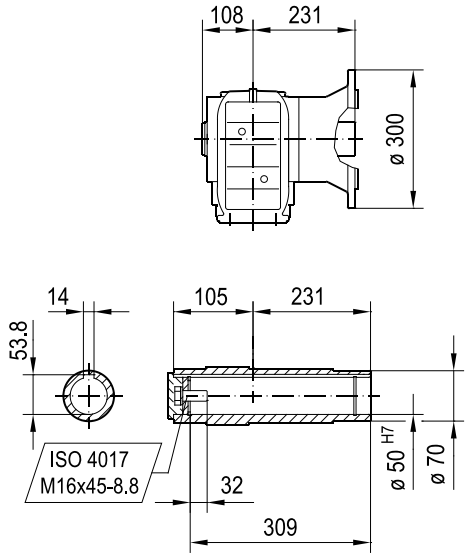

(→ 📖 4.1)	DRN												
	71M	80MK	80MS	80M	90S	90L	100LS	100L/LM	112M	132S	132M	132L	160..
AC	139	156	156	156	179	179	197	197	221	221	261	261	314
AD	118	128	128	128	140	140	157	157	170	170	228	228	253
ADS	129	139	139	139	150	150	158	158	172	172	228	228	253
L	524	535	552	581	583	615	610	660	691	741	759	785	851
LS	592	616	633	662	676	708	704	754	803	853	897	922	1040
LB	212	223	240	269	271	303	298	348	379	429	447	473	539
LBS	280	304	321	350	364	396	392	442	491	541	585	610	728

33 059 00 14

KA77..

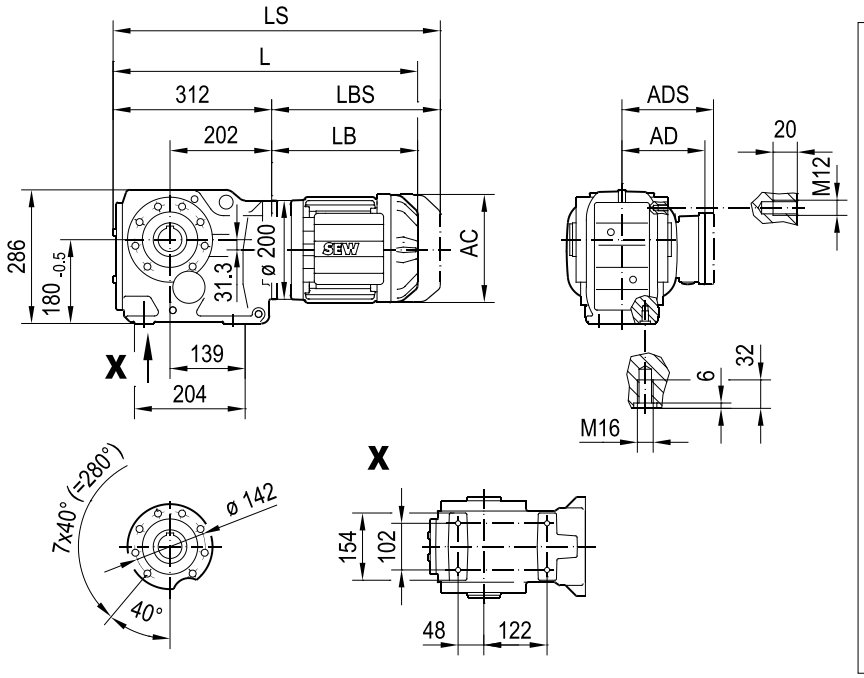

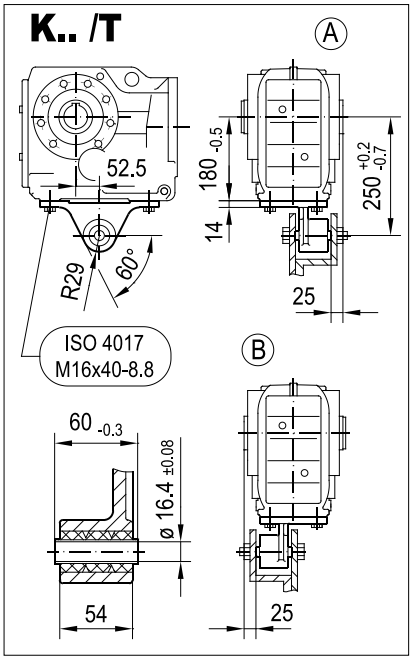

KA77..

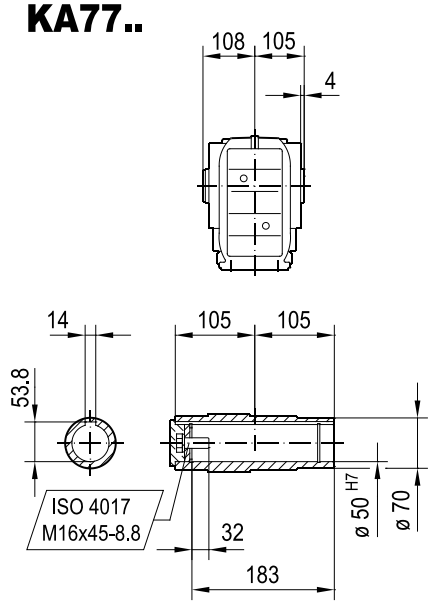

KH77..

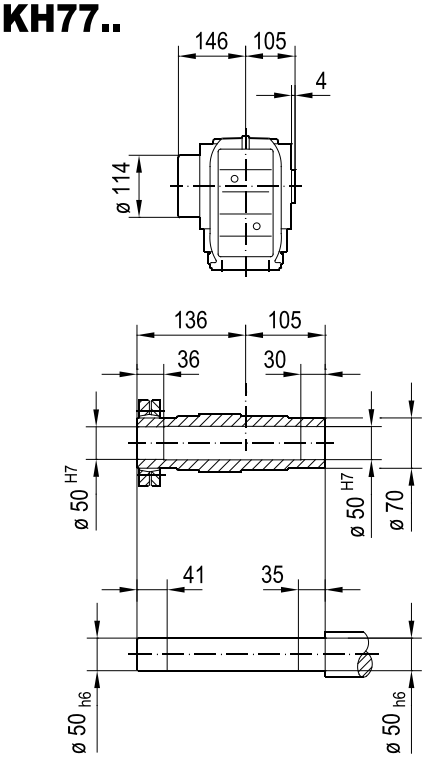

KV77..

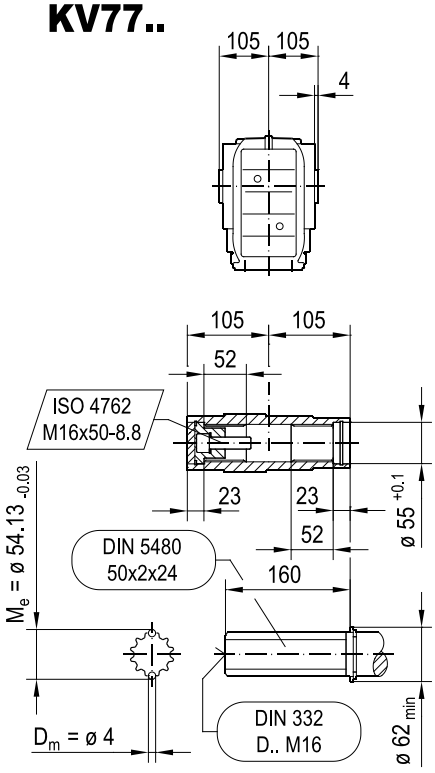

(→ 📖 4.1)	DRN												
	71M	80MK	80MS	80M	90S	90L	100LS	100L/LM	112M	132S	132M	132L	160..
AC	139	156	156	156	179	179	197	197	221	221	261	261	314
AD	118	128	128	128	140	140	157	157	170	170	228	228	253
ADS	129	139	139	139	150	150	158	158	172	172	228	228	253
L	524	535	552	581	583	615	610	660	691	741	759	785	851
LS	592	616	633	662	676	708	704	754	803	853	897	922	1040
LB	212	223	240	269	271	303	298	348	379	429	447	473	539
LBS	280	304	321	350	364	396	392	442	491	541	585	610	728

33 060 00 14

KAZ77..

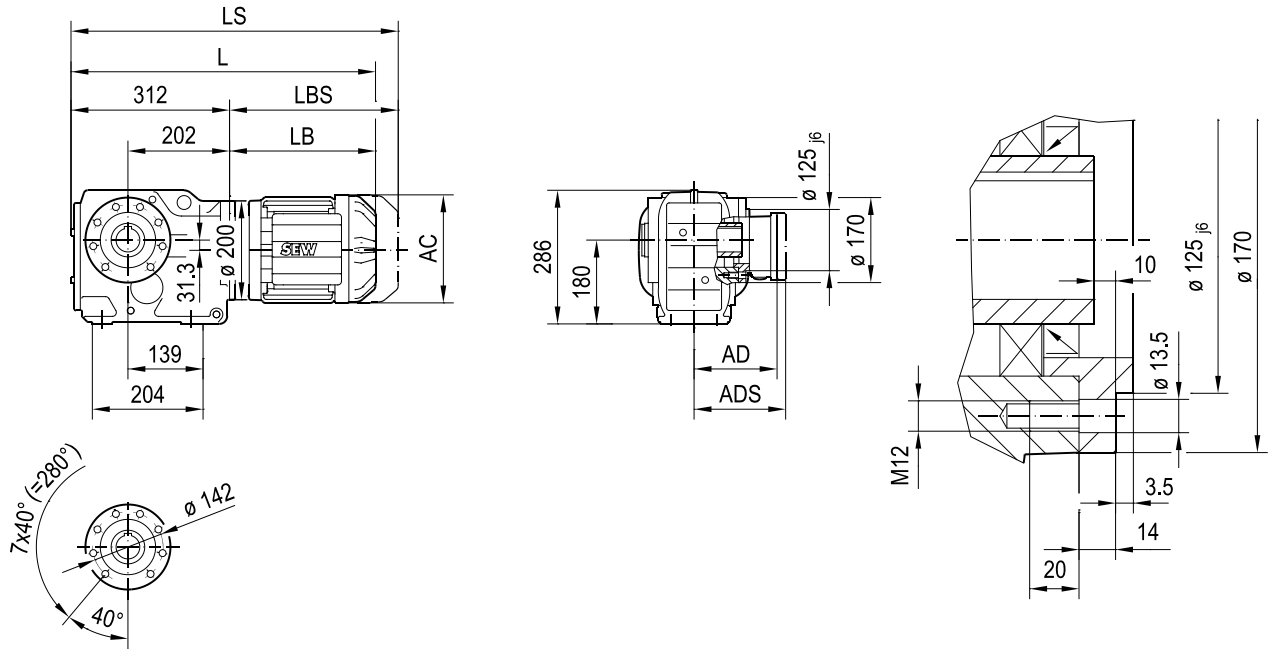

KAZ77..

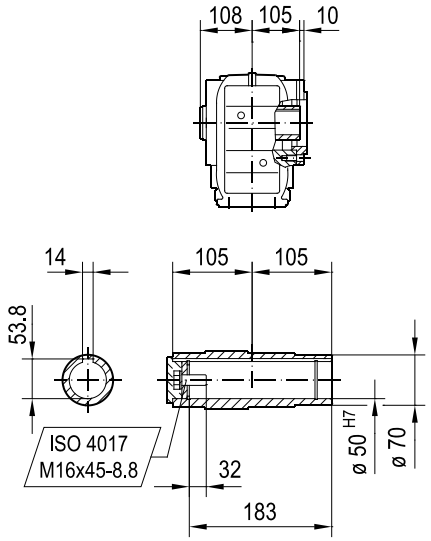

KHZ77..

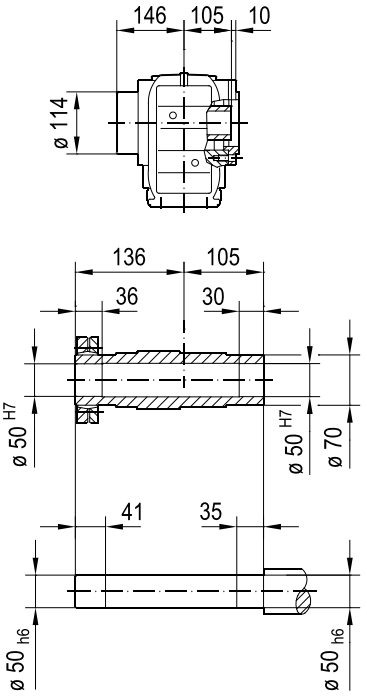

KVZ77..

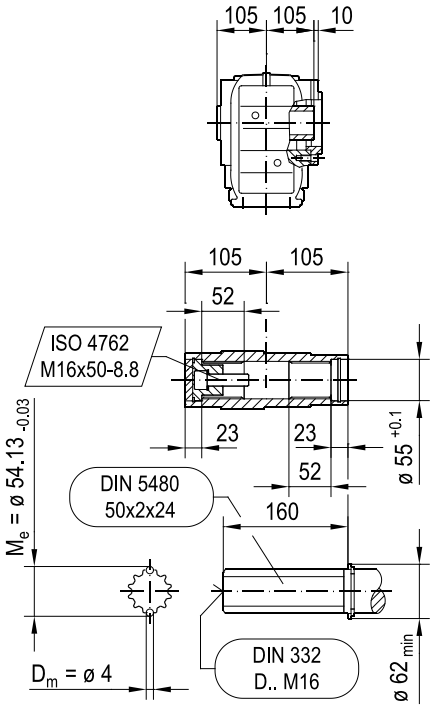

(→ 📖 4.1)	DRN												
	71M	80MK	80MS	80M	90S	90L	100LS	100L/LM	112M	132S	132M	132L	160..
AC	139	156	156	156	179	179	197	197	221	221	261	261	314
AD	118	128	128	128	140	140	157	157	170	170	228	228	253
ADS	129	139	139	139	150	150	158	158	172	172	228	228	253
L	524	535	552	581	583	615	610	660	691	741	759	785	851
LS	592	616	633	662	676	708	704	754	803	853	897	922	1040
LB	212	223	240	269	271	303	298	348	379	429	447	473	539
LBS	280	304	321	350	364	396	392	442	491	541	585	610	728

KZ77..

33 236 00 15

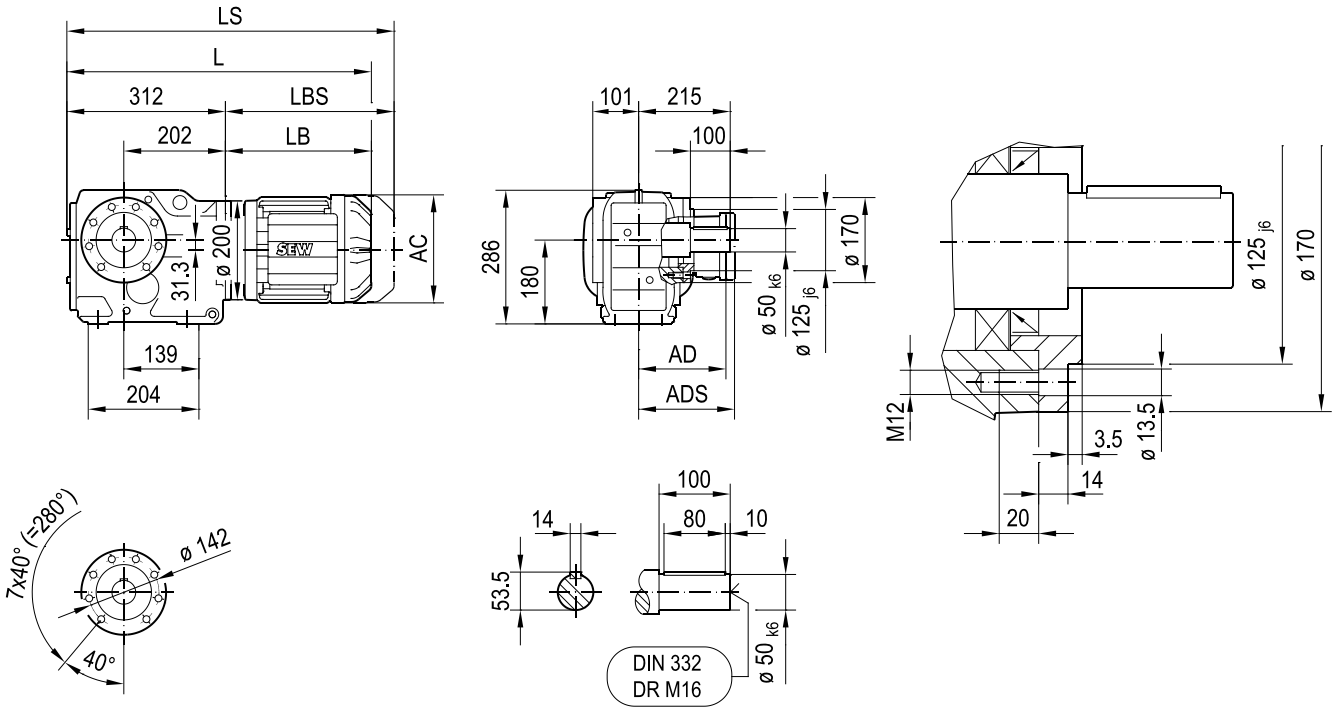

(→ 📖 4.1)	DRN												
	71M	80MK	80MS	80M	90S	90L	100LS	100L/LM	112M	132S	132M	132L	160..
AC	139	156	156	156	179	179	197	197	221	221	261	261	314
AD	118	128	128	128	140	140	157	157	170	170	228	228	253
ADS	129	139	139	139	150	150	158	158	172	172	228	228	253
L	524	535	552	581	583	615	610	660	691	741	759	785	851
LS	592	616	633	662	676	708	704	754	803	853	897	922	1040
LB	212	223	240	269	271	303	298	348	379	429	447	473	539
LBS	280	304	321	350	364	396	392	442	491	541	585	610	728

KT77..

33 061 02 14

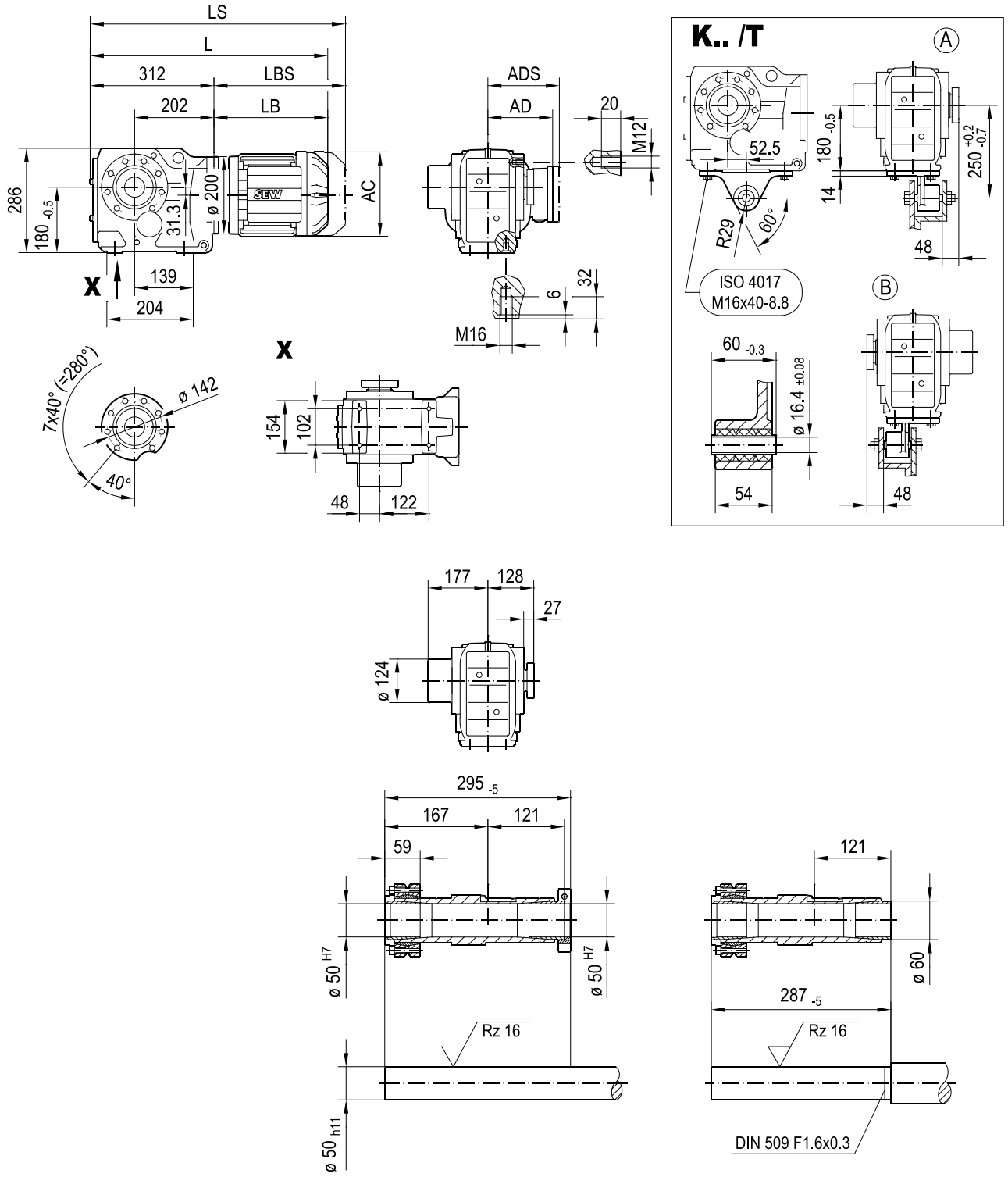

(→ 📖 4.1)	DRN												
	71M	80MK	80MS	80M	90S	90L	100LS	100L/LM	112M	132S	132M	132L	160..
AC	139	156	156	156	179	179	197	197	221	221	261	261	314
AD	118	128	128	128	140	140	157	157	170	170	228	228	253
ADS	129	139	139	139	150	150	158	158	172	172	228	228	253
L	524	535	552	581	583	615	610	660	691	741	759	785	851
LS	592	616	633	662	676	708	704	754	803	853	897	922	1040
LB	212	223	240	269	271	303	298	348	379	429	447	473	539
LBS	280	304	321	350	364	396	392	442	491	541	585	610	728

33 062 00 14

K87..

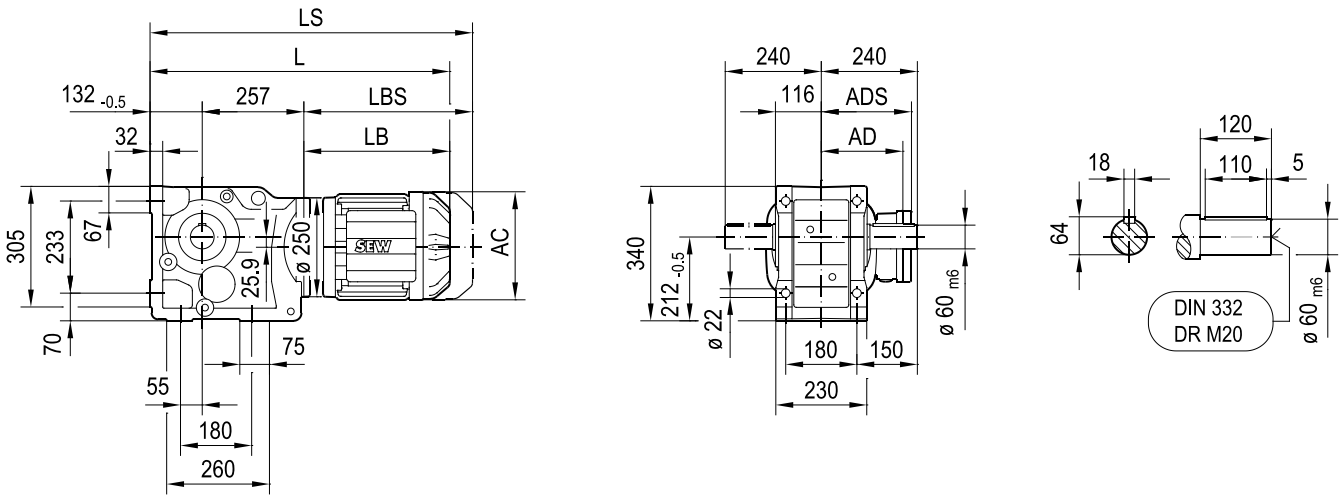

KA87B..

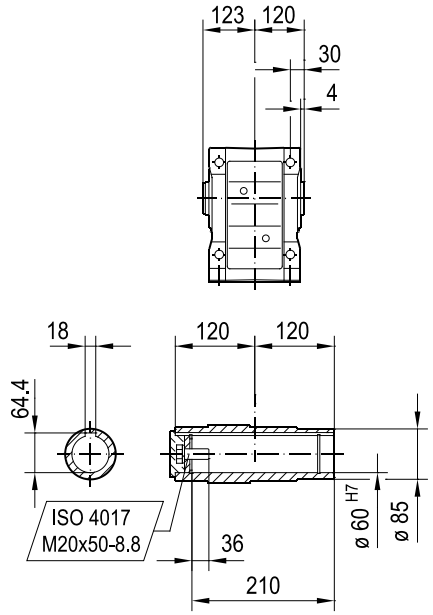

KH87B..

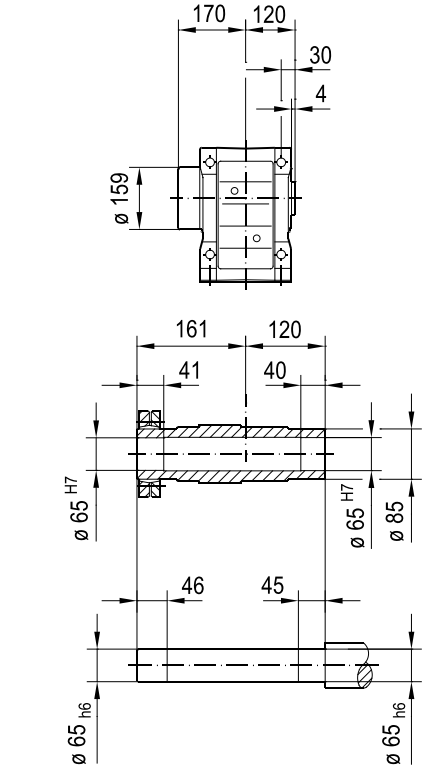

KV87B..

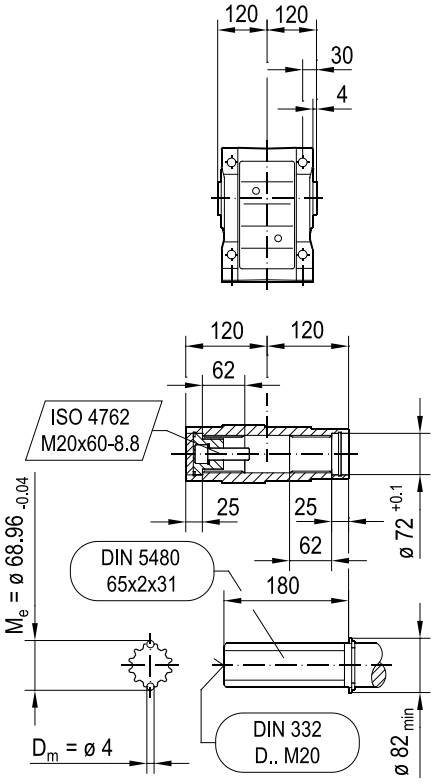

(→ 4.1)	DRN												
	80MK	80M	90S	90L	100LS	100L/LM	112M	132S	132M	132L	160..	180..	200L
AC	156	156	179	179	197	197	221	221	261	261	314	357	394
AD	128	128	140	140	157	157	170	170	228	228	253	268	283
ADS	139	139	150	150	158	158	172	172	228	228	253	268	283
L	607	653	655	687	682	732	763	813	831	857	923	946	1056
LS	688	734	748	780	776	826	875	925	969	994	1112	1135	1261
LB	218	264	266	298	293	343	374	424	442	468	534	557	667
LBS	299	345	359	391	387	437	486	536	580	605	723	746	872

33 063 00 14

KF87..

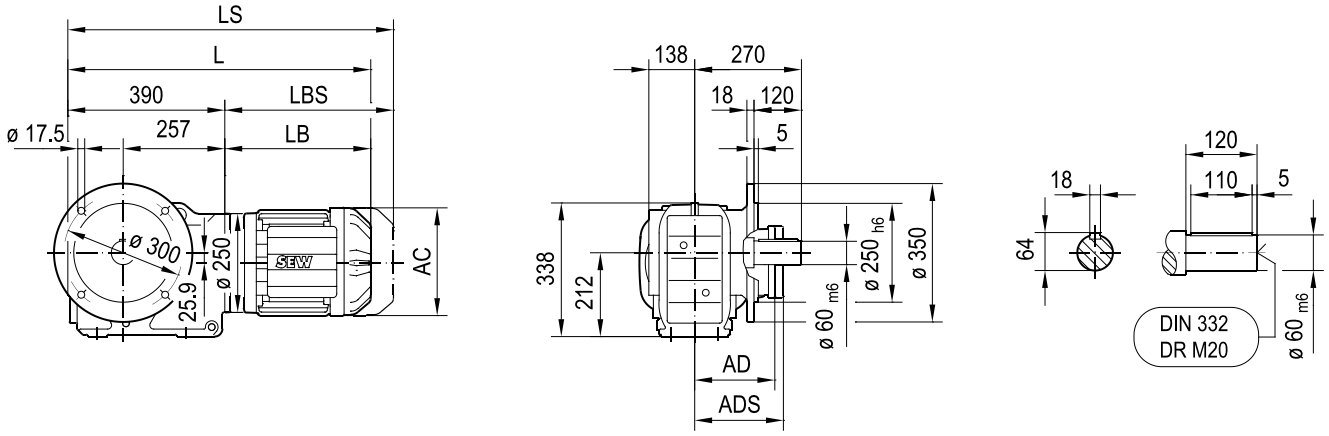

KAF87..

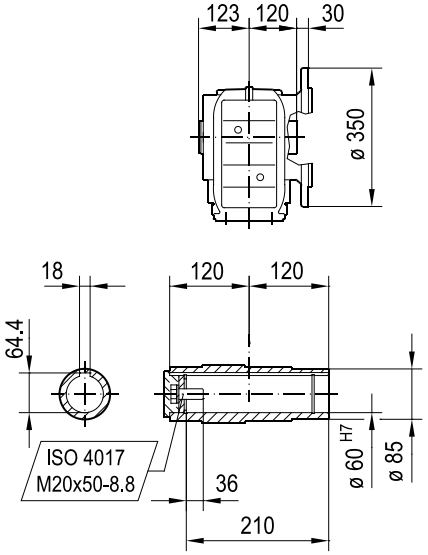

KHF87..

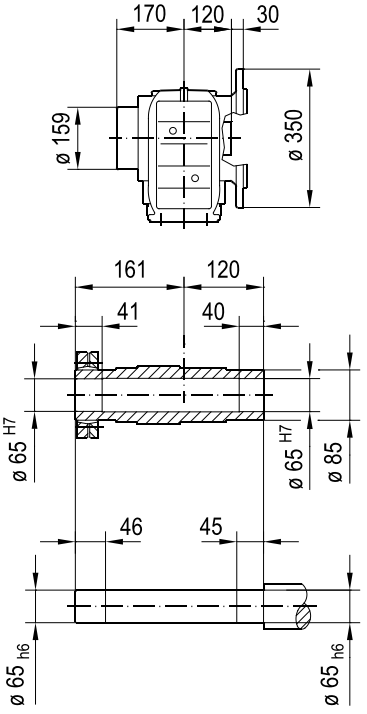

KVF87..

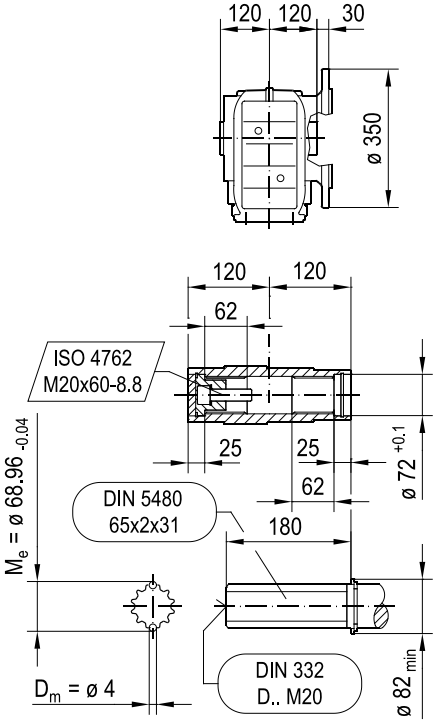

(→ 📖 4.1)	DRN												
	80MK	80M	90S	90L	100LS	100L/LM	112M	132S	132M	132L	160..	180..	200L
AC	156	156	179	179	197	197	221	221	261	261	314	357	394
AD	128	128	140	140	157	157	170	170	228	228	253	268	283
ADS	139	139	150	150	158	158	172	172	228	228	253	268	283
L	608	654	656	688	683	733	764	814	832	858	924	947	1057
LS	689	735	749	781	777	827	876	926	970	995	1113	1136	1262
LB	218	264	266	298	293	343	374	424	442	468	534	557	667
LBS	299	345	359	391	387	437	486	536	580	605	723	746	872

33 272 01 17

KM87..

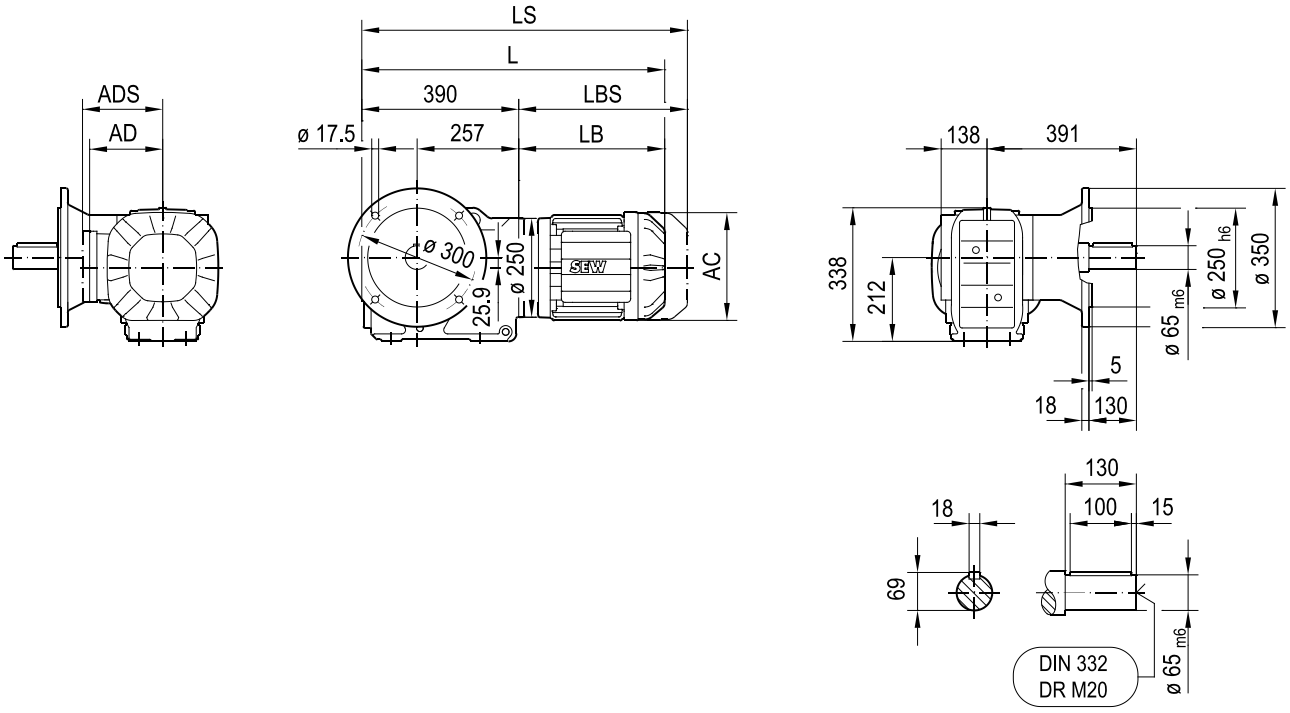

KAM87..

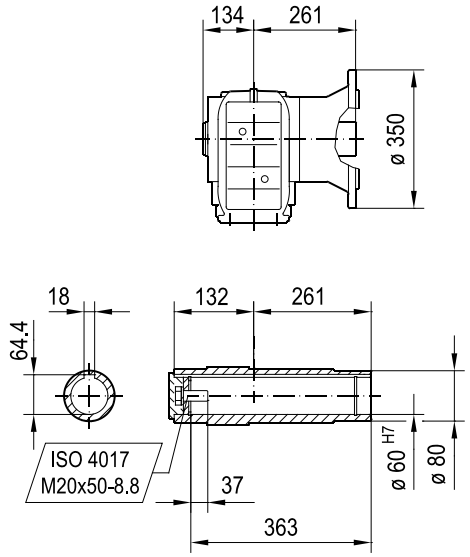

(→ 📖 4.1)	DRN												
	80MK	80M	90S	90L	100LS	100L/LM	112M	132S	132M	132L	160..	180..	200L
AC	156	156	179	179	197	197	221	221	261	261	314	357	394
AD	128	128	140	140	157	157	170	170	228	228	253	268	283
ADS	139	139	150	150	158	158	172	172	228	228	253	268	283
L	608	654	656	688	683	733	764	814	832	858	924	947	1057
LS	689	735	749	781	777	827	876	926	970	995	1113	1136	1262
LB	218	264	266	298	293	343	374	424	442	468	534	557	667
LBS	299	345	359	391	387	437	486	536	580	605	723	746	872

33 064 00 14

KA87..

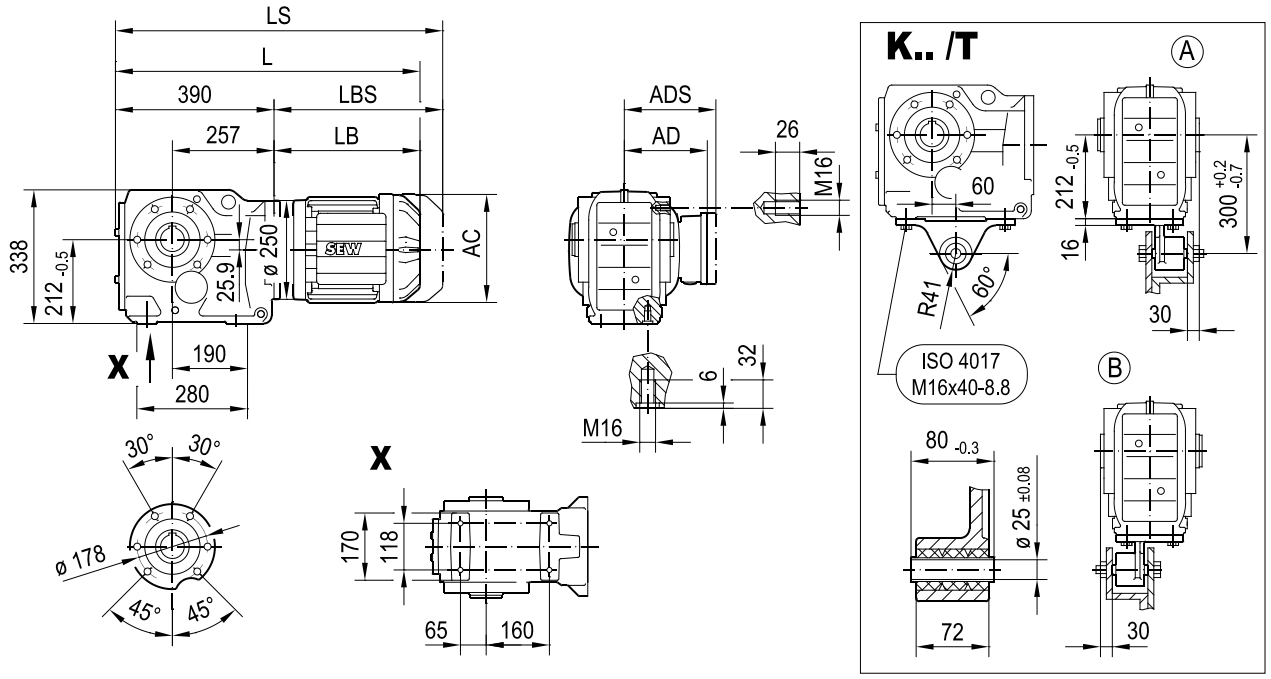

KA87..

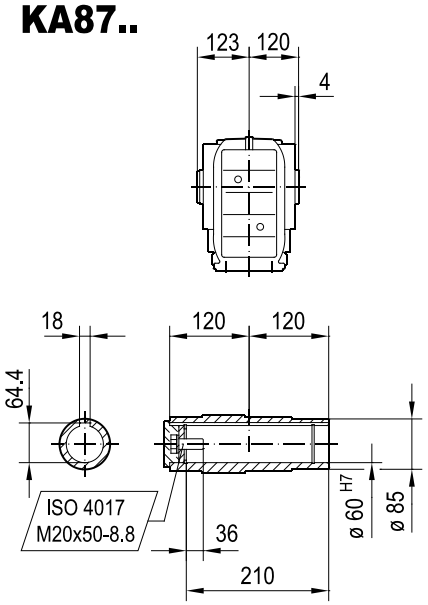

KH87..

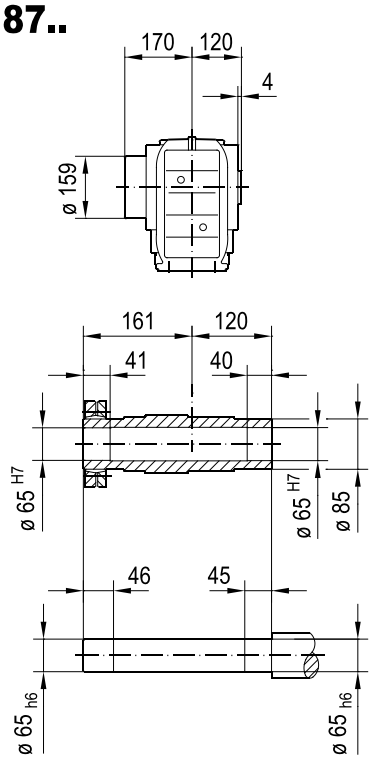

KV87..

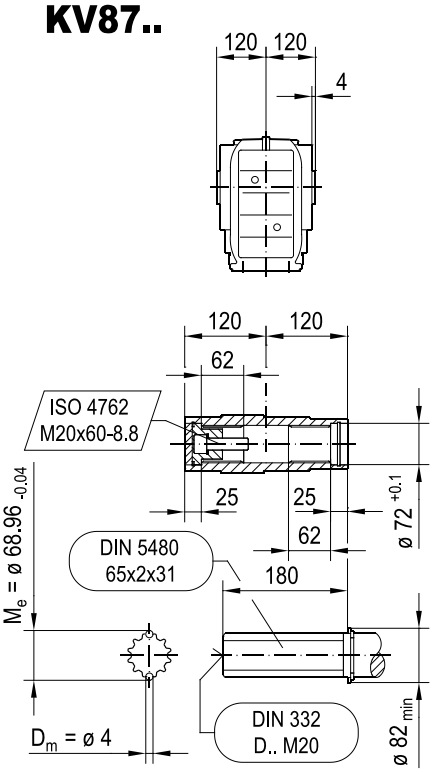

(→ 📖 4.1)	DRN												
	80MK	80M	90S	90L	100LS	100L/LM	112M	132S	132M	132L	160..	180..	200L
AC	156	156	179	179	197	197	221	221	261	261	314	357	394
AD	128	128	140	140	157	157	170	170	228	228	253	268	283
ADS	139	139	150	150	158	158	172	172	228	228	253	268	283
L	608	654	656	688	683	733	764	814	832	858	924	947	1057
LS	689	735	749	781	777	827	876	926	970	995	1113	1136	1262
LB	218	264	266	298	293	343	374	424	442	468	534	557	667
LBS	299	345	359	391	387	437	486	536	580	605	723	746	872

33 065 00 14

KAZ87..

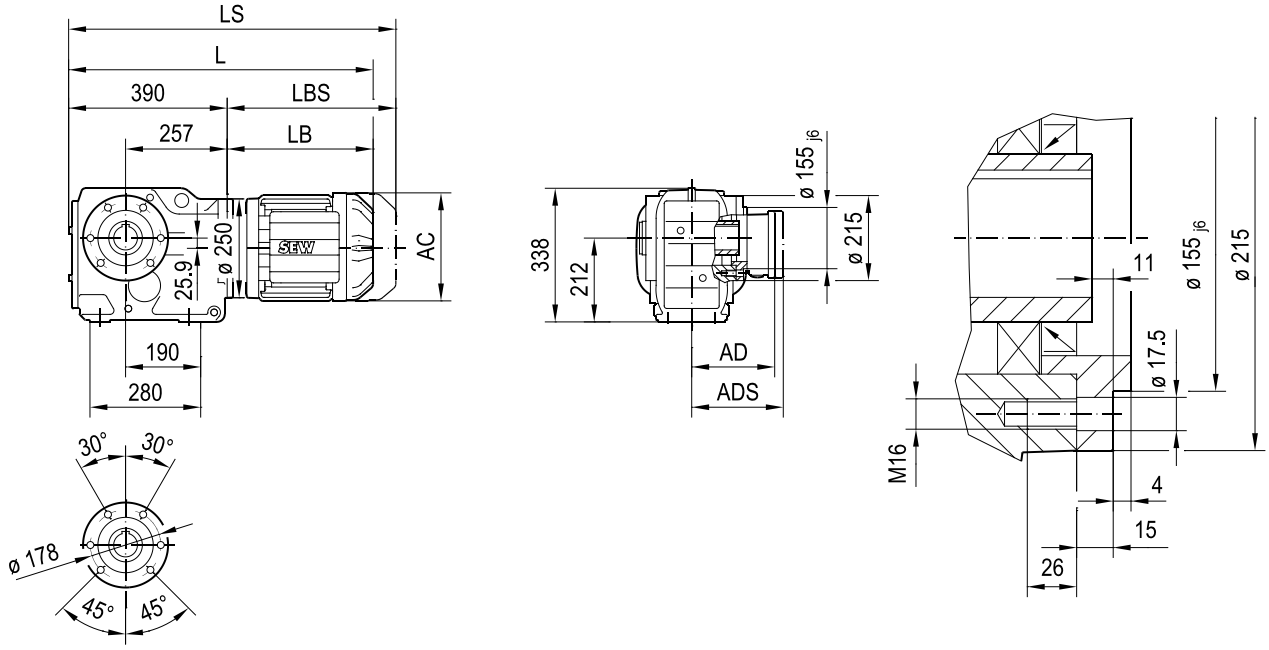

KAZ87..

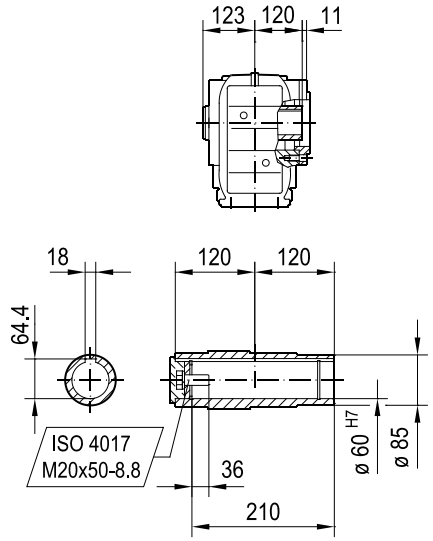

KHZ87..

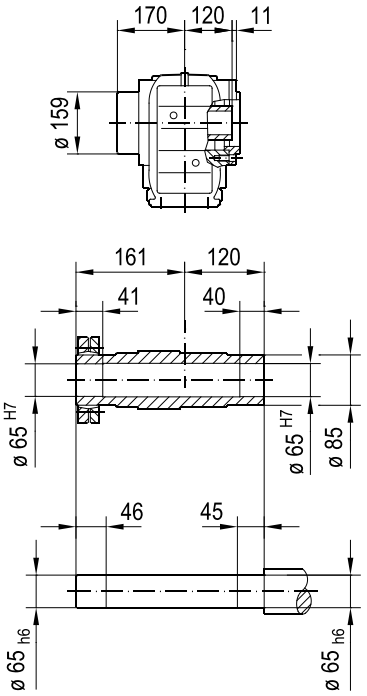

KVZ87..

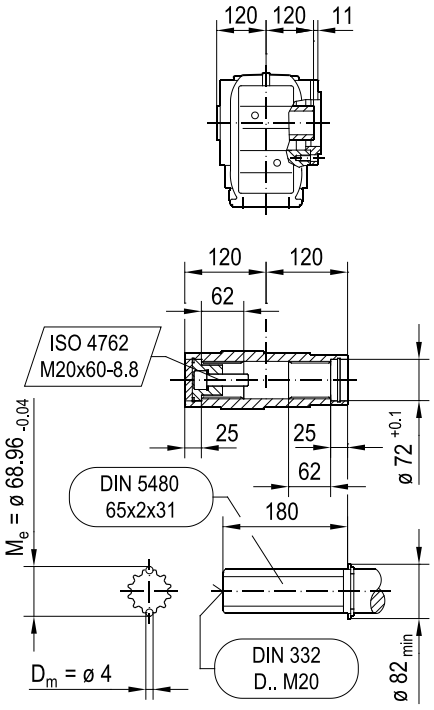

(→ 📖 4.1)	DRN												
	80MK	80M	90S	90L	100LS	100L/LM	112M	132S	132M	132L	160..	180..	200L
AC	156	156	179	179	197	197	221	221	261	261	314	357	394
AD	128	128	140	140	157	157	170	170	228	228	253	268	283
ADS	139	139	150	150	158	158	172	172	228	228	253	268	283
L	608	654	656	688	683	733	764	814	832	858	924	947	1057
LS	689	735	749	781	777	827	876	926	970	995	1113	1136	1262
LB	218	264	266	298	293	343	374	424	442	468	534	557	667
LBS	299	345	359	391	387	437	486	536	580	605	723	746	872

KZ87..

33 237 00 15

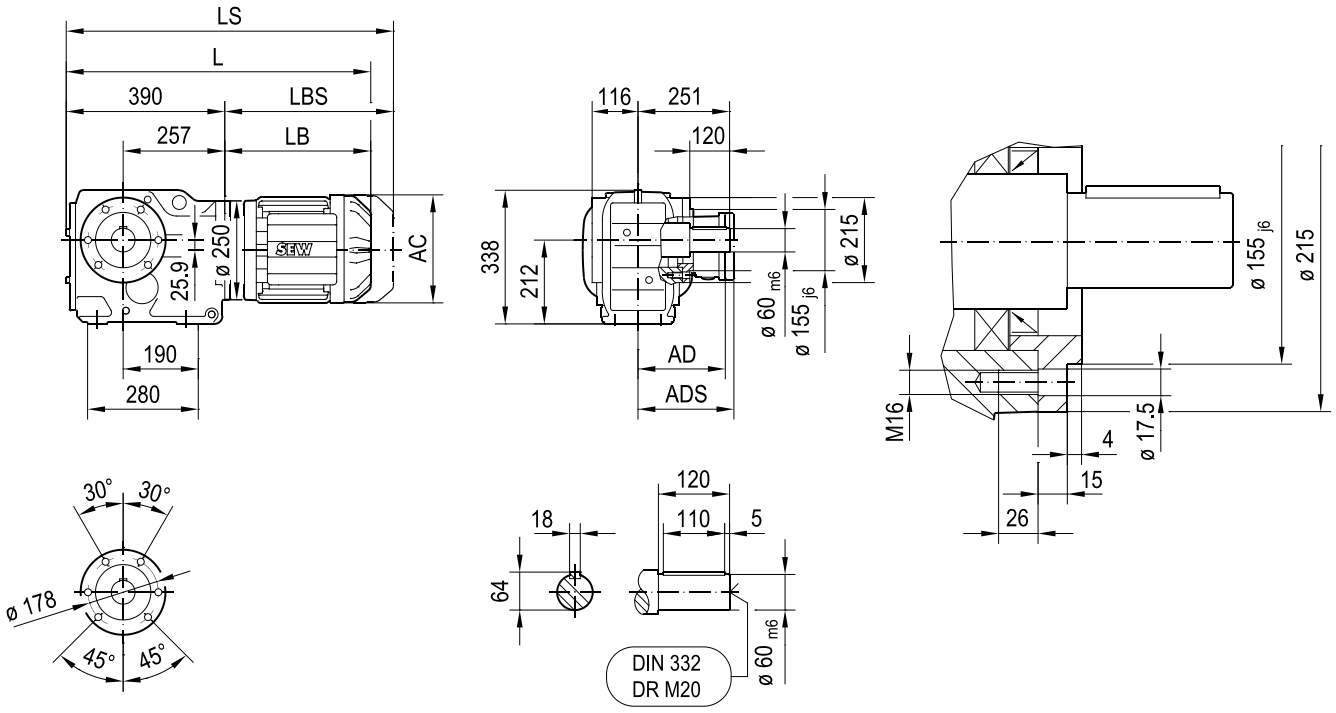

(→ 📖 4.1)	DRN												
	80MK	80M	90S	90L	100LS	100L/LM	112M	132S	132M	132L	160..	180..	200L
AC	156	156	179	179	197	197	221	221	261	261	314	357	394
AD	128	128	140	140	157	157	170	170	228	228	253	268	283
ADS	139	139	150	150	158	158	172	172	228	228	253	268	283
L	608	654	656	688	683	733	764	814	832	858	924	947	1057
LS	689	735	749	781	777	827	876	926	970	995	1113	1136	1262
LB	218	264	266	298	293	343	374	424	442	468	534	557	667
LBS	299	345	359	391	387	437	486	536	580	605	723	746	872

KT87..

33 066 02 14

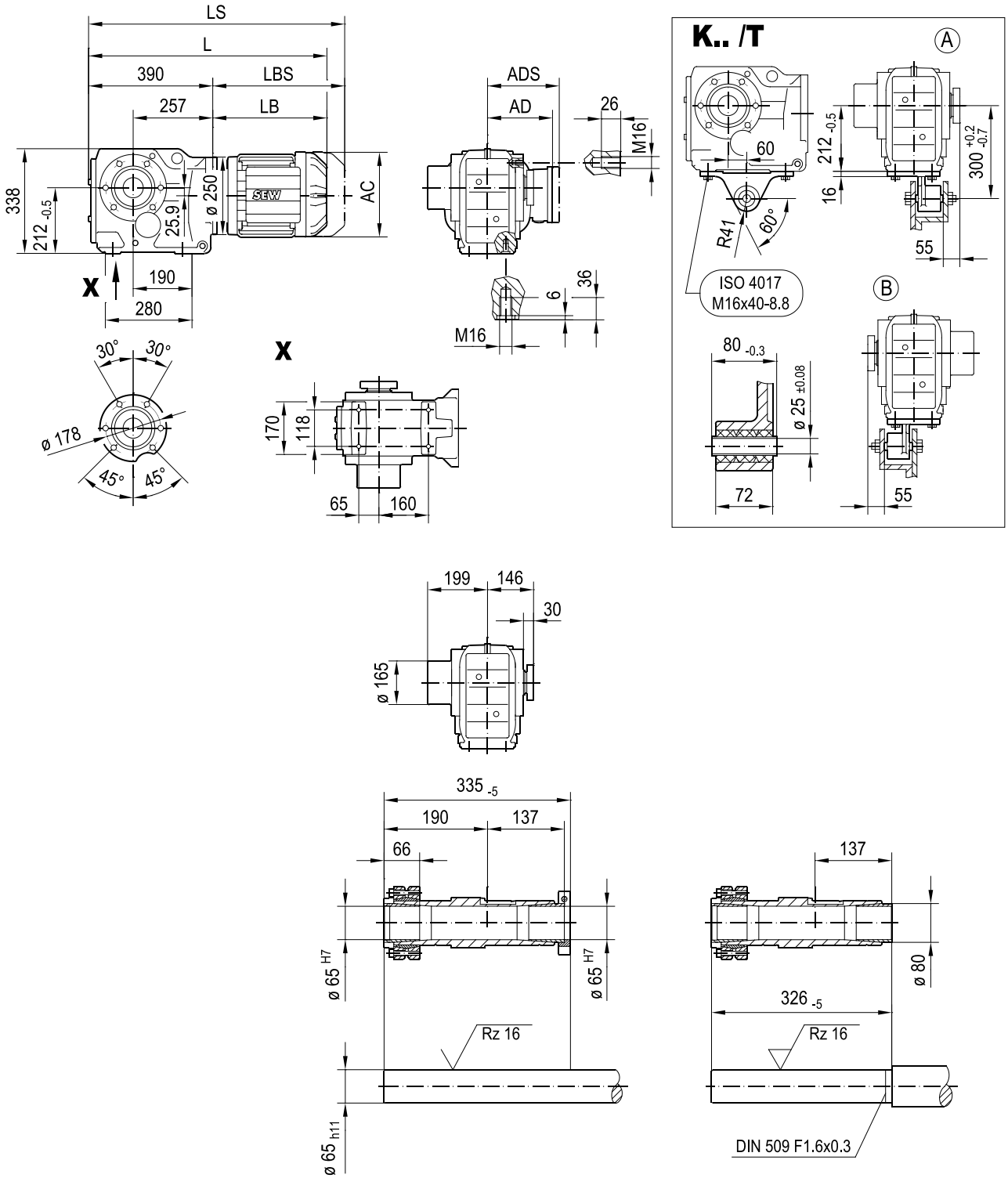

(→ 📖 4.1)	DRN												
	80MK	80M	90S	90L	100LS	100L/LM	112M	132S	132M	132L	160..	180..	200L
AC	156	156	179	179	197	197	221	221	261	261	314	357	394
AD	128	128	140	140	157	157	170	170	228	228	253	268	283
ADS	139	139	150	150	158	158	172	172	228	228	253	268	283
L	608	654	656	688	683	733	764	814	832	858	924	947	1057
LS	689	735	749	781	777	827	876	926	970	995	1113	1136	1262
LB	218	264	266	298	293	343	374	424	442	468	534	557	667
LBS	299	345	359	391	387	437	486	536	580	605	723	746	872

33 067 00 14

K97..

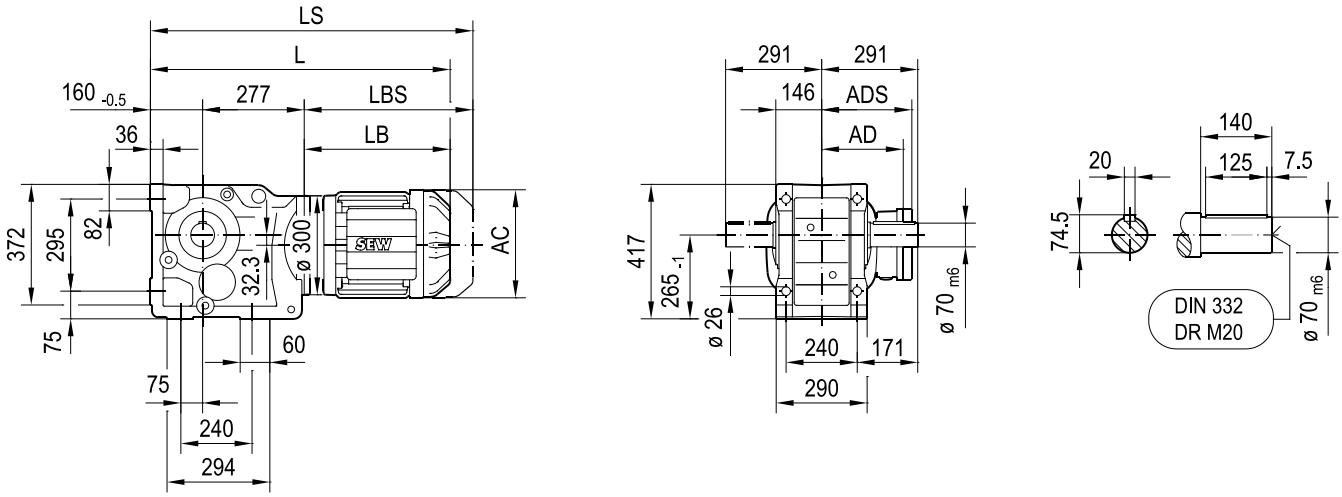

KA97B..

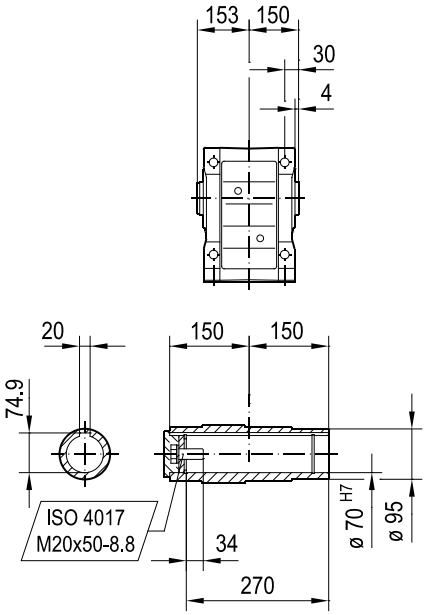

KH97B..

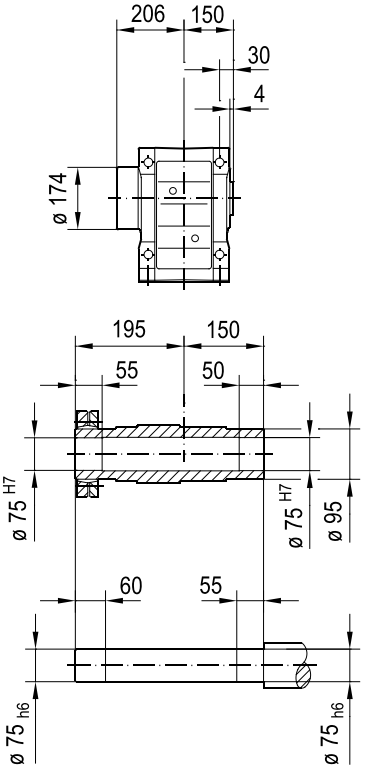

KV97B..

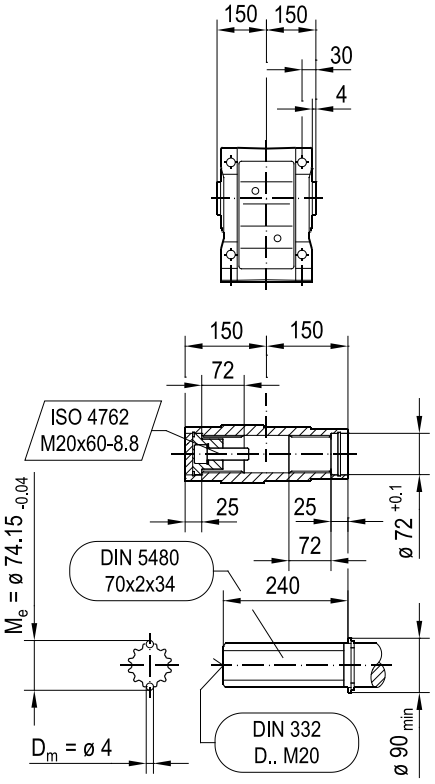

(→ 📖 4.1)	DRN											
	90S	90L	100LS	100L/LM	112M	132S	132M	132L	160..	180..	200L	225..
AC	179	179	197	197	221	221	261	261	314	357	394	434
AD	140	140	157	157	170	170	228	228	253	268	283	305
ADS	150	150	158	158	172	172	228	228	253	268	283	305
L	698	730	725	775	806	856	874	900	966	989	1099	1073
LS	791	823	819	869	918	968	1012	1037	1155	1178	1304	1278
LB	261	293	288	338	369	419	437	463	529	552	662	636
LBS	354	386	382	432	481	531	575	600	718	741	867	841

KF97..

33 068 00 14

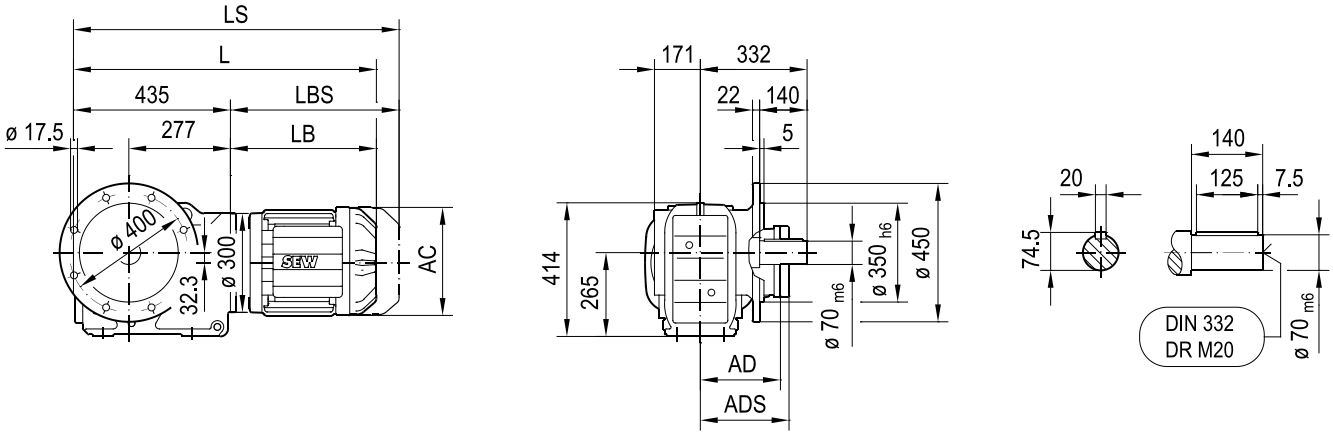

KAF97..

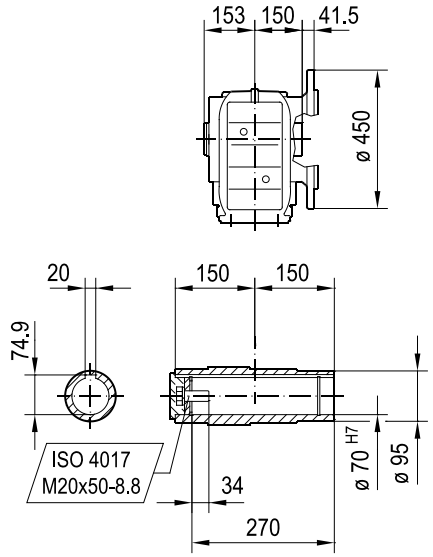

KHF97..

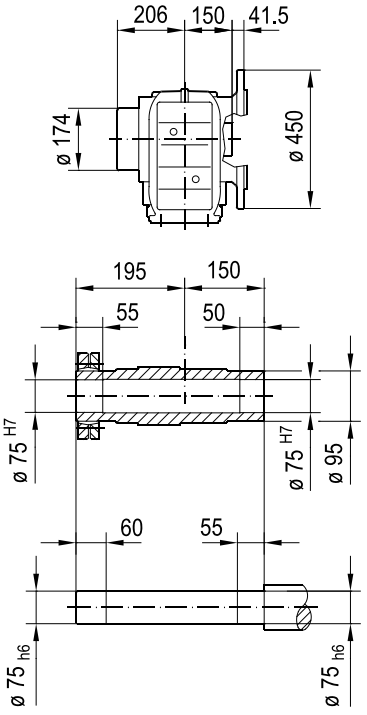

KVF97..

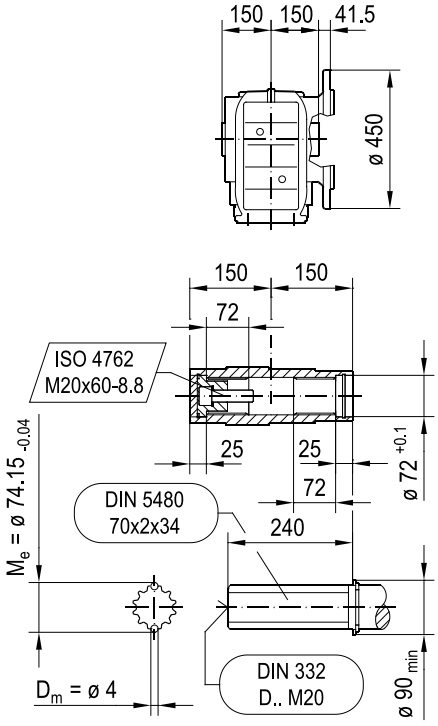

(→ 📖 4.1)	DRN											
	90S	90L	100LS	100L/LM	112M	132S	132M	132L	160..	180..	200L	225..
AC	179	179	197	197	221	221	261	261	314	357	394	434
AD	140	140	157	157	170	170	228	228	253	268	283	305
ADS	150	150	158	158	172	172	228	228	253	268	283	305
L	696	728	723	773	804	854	872	898	964	987	1097	1071
LS	789	821	817	867	916	966	1010	1035	1153	1176	1302	1276
LB	261	293	288	338	369	419	437	463	529	552	662	636
LBS	354	386	382	432	481	531	575	600	718	741	867	841

33 273 00 17

KM97..

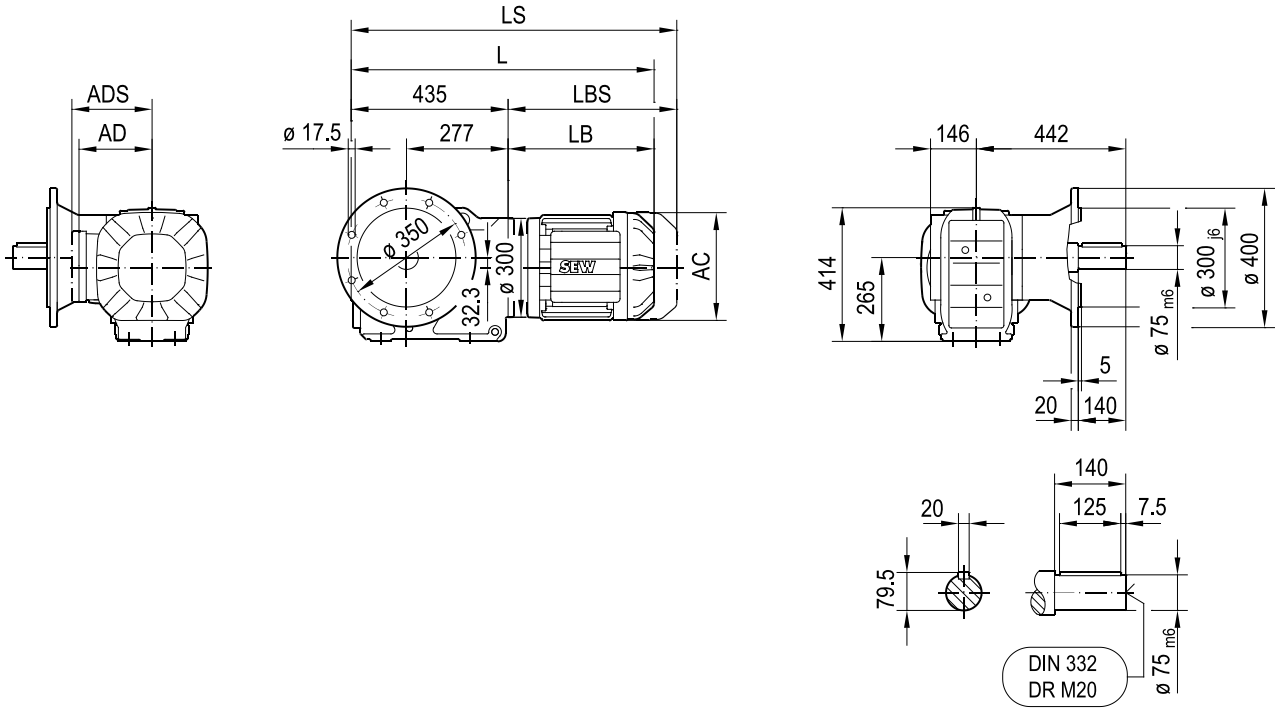

KAM97..

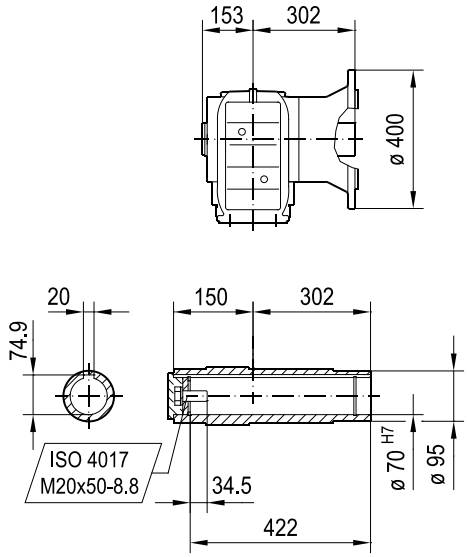

(→ 📖 4.1)	DRN											
	90S	90L	100LS	100L/LM	112M	132S	132M	132L	160..	180..	200L	225..
AC	179	179	197	197	221	221	261	261	314	357	394	434
AD	140	140	157	157	170	170	228	228	253	268	283	305
ADS	150	150	158	158	172	172	228	228	253	268	283	305
L	696	728	723	773	804	854	872	898	964	987	1097	1071
LS	789	821	817	867	916	966	1010	1035	1153	1176	1302	1276
LB	261	293	288	338	369	419	437	463	529	552	662	636
LBS	354	386	382	432	481	531	575	600	718	741	867	841

33 069 00 14

KA97..

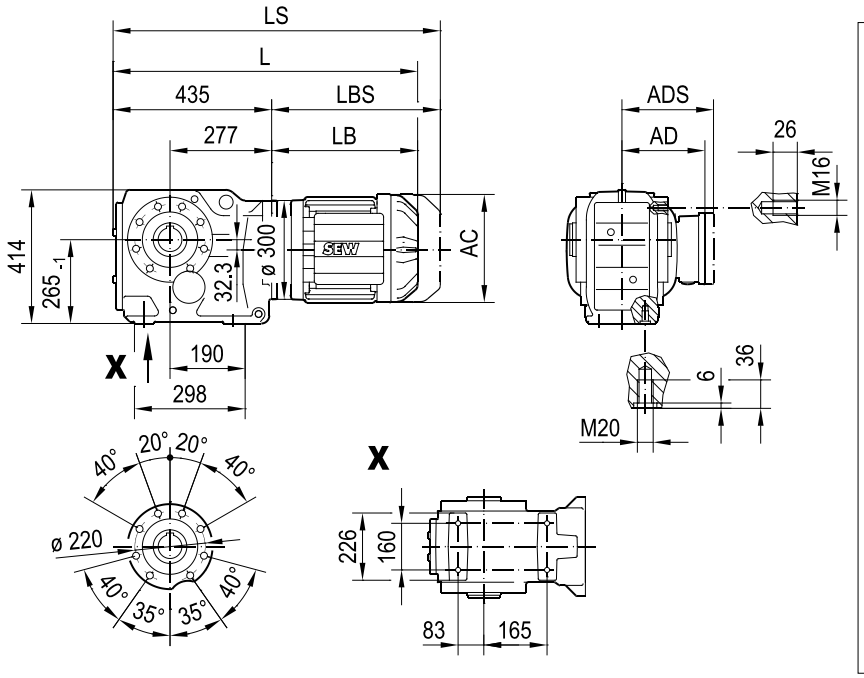

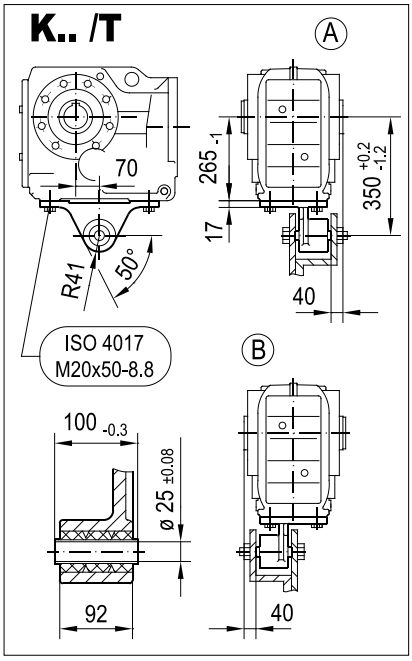

KA97..

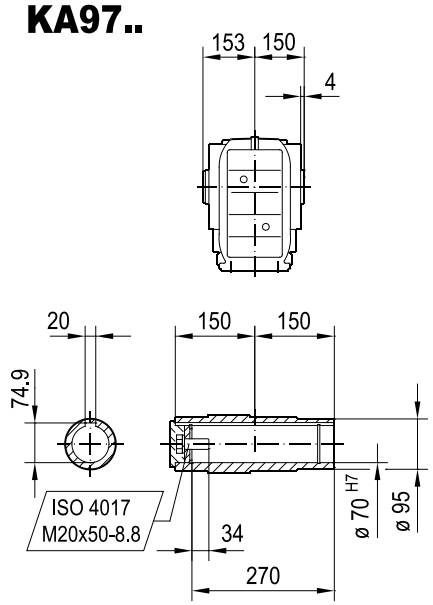

KH97..

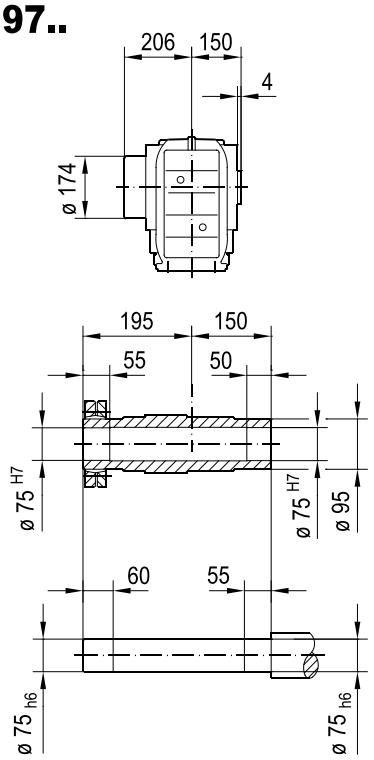

KV97..

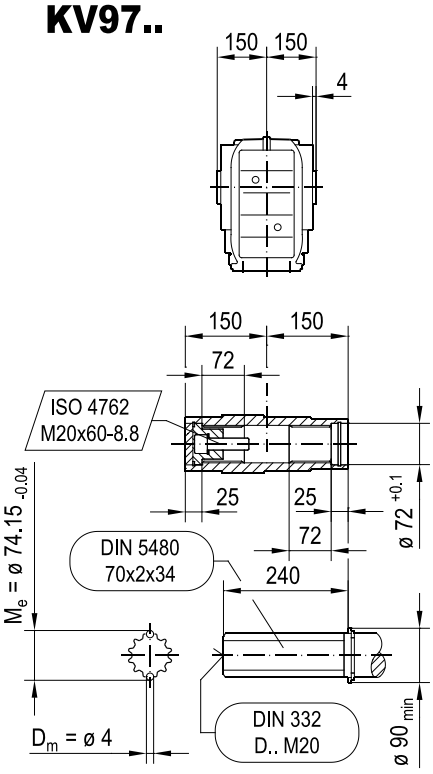

(→ 📖 4.1)	DRN											
	90S	90L	100LS	100L/LM	112M	132S	132M	132L	160..	180..	200L	225..
AC	179	179	197	197	221	221	261	261	314	357	394	434
AD	140	140	157	157	170	170	228	228	253	268	283	305
ADS	150	150	158	158	172	172	228	228	253	268	283	305
L	696	728	723	773	804	854	872	898	964	987	1097	1071
LS	789	821	817	867	916	966	1010	1035	1153	1176	1302	1276
LB	261	293	288	338	369	419	437	463	529	552	662	636
LBS	354	386	382	432	481	531	575	600	718	741	867	841

33 070 00 14

KAZ97..

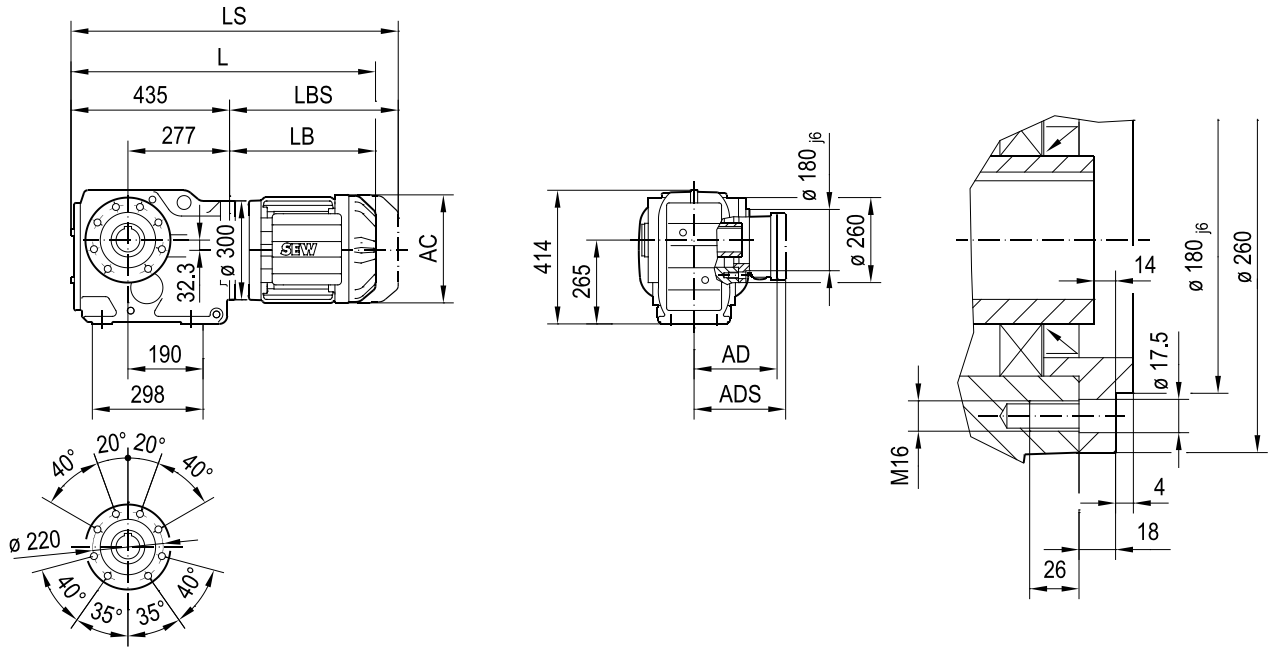

KAZ97..

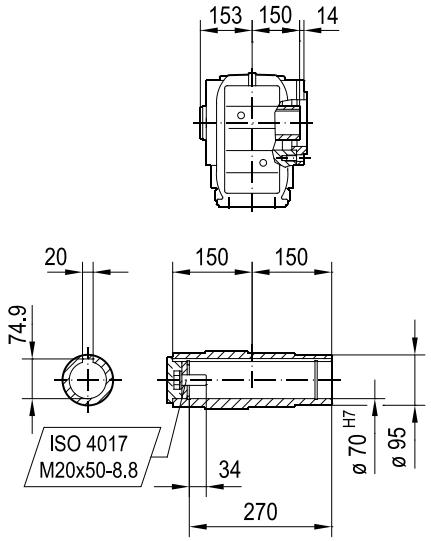

KHZ97..

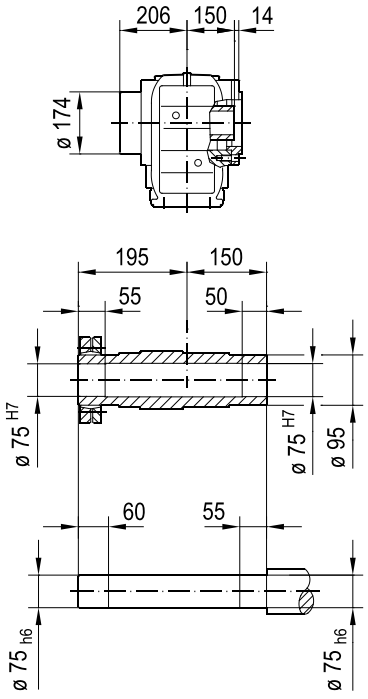

KVZ97..

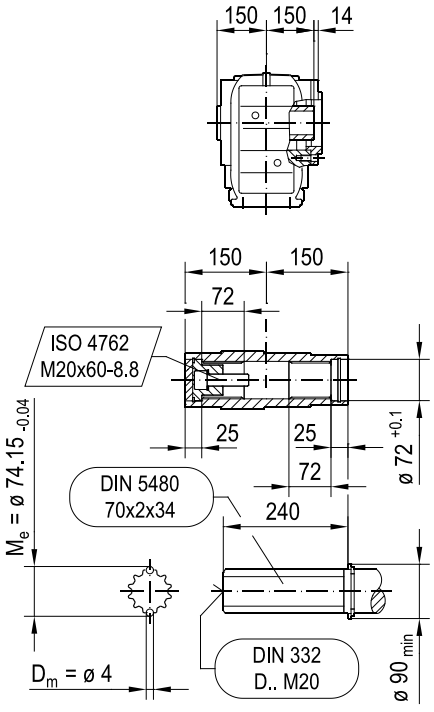

(→ 📖 4.1)	DRN											
	90S	90L	100LS	100L/LM	112M	132S	132M	132L	160..	180..	200L	225..
AC	179	179	197	197	221	221	261	261	314	357	394	434
AD	140	140	157	157	170	170	228	228	253	268	283	305
ADS	150	150	158	158	172	172	228	228	253	268	283	305
L	696	728	723	773	804	854	872	898	964	987	1097	1071
LS	789	821	817	867	916	966	1010	1035	1153	1176	1302	1276
LB	261	293	288	338	369	419	437	463	529	552	662	636
LBS	354	386	382	432	481	531	575	600	718	741	867	841

KZ97..

33 238 00 15

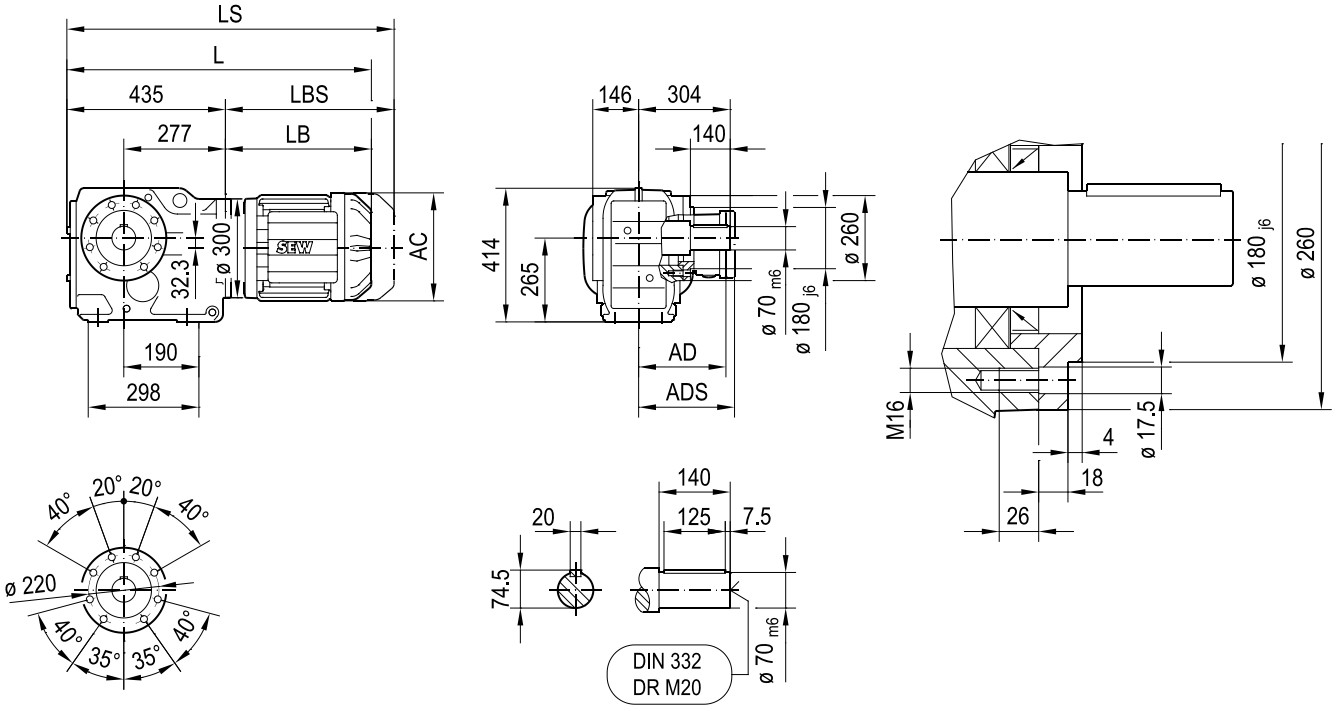

(→ 📖 4.1)	DRN											
	90S	90L	100LS	100L/LM	112M	132S	132M	132L	160..	180..	200L	225..
AC	179	179	197	197	221	221	261	261	314	357	394	434
AD	140	140	157	157	170	170	228	228	253	268	283	305
ADS	150	150	158	158	172	172	228	228	253	268	283	305
L	696	728	723	773	804	854	872	898	964	987	1097	1071
LS	789	821	817	867	916	966	1010	1035	1153	1176	1302	1276
LB	261	293	288	338	369	419	437	463	529	552	662	636
LBS	354	386	382	432	481	531	575	600	718	741	867	841

KT97..

33 071 02 14

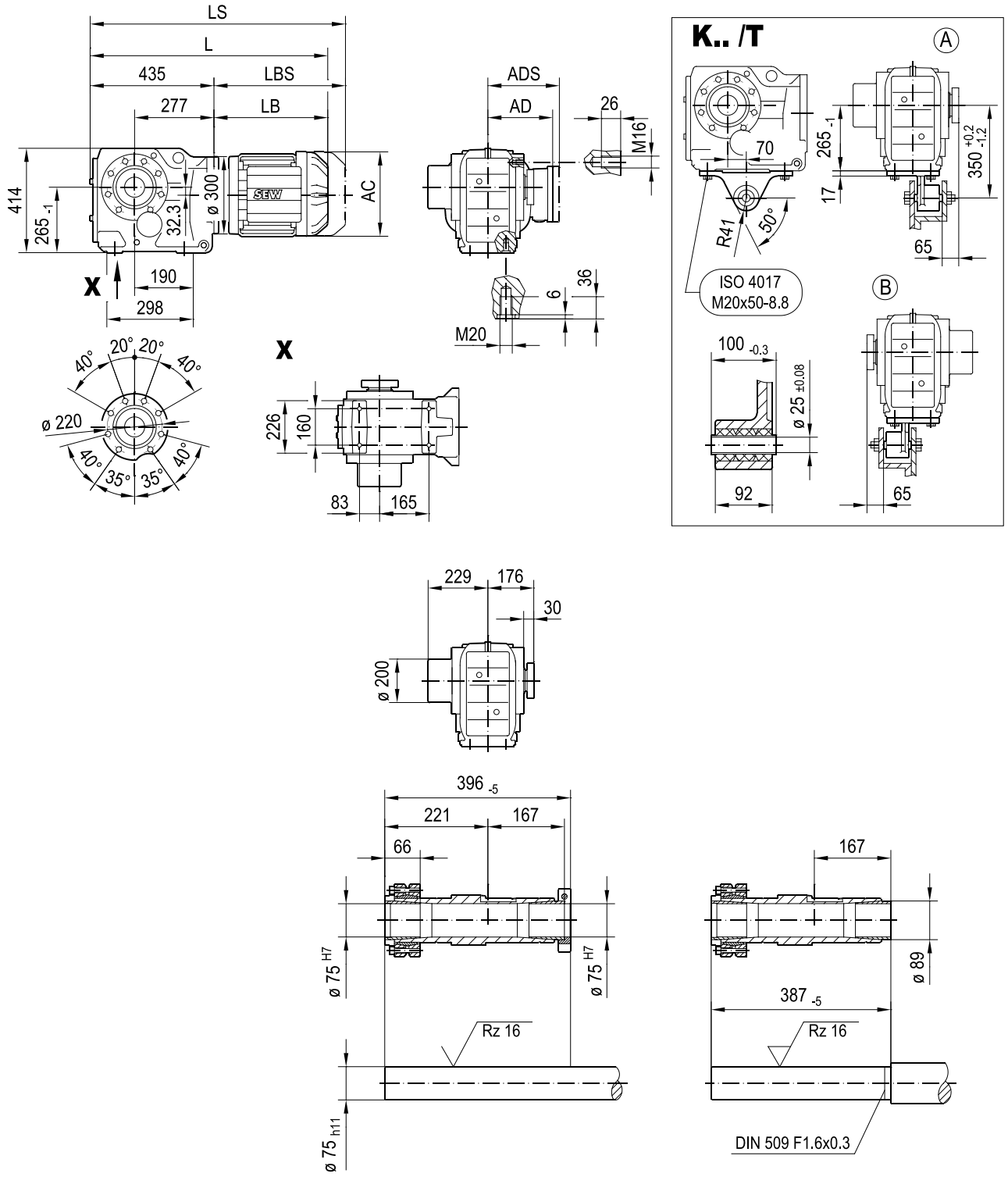

(→ 📖 4.1)	DRN											
	90S	90L	100LS	100L/LM	112M	132S	132M	132L	160..	180..	200L	225..
AC	179	179	197	197	221	221	261	261	314	357	394	434
AD	140	140	157	157	170	170	228	228	253	268	283	305
ADS	150	150	158	158	172	172	228	228	253	268	283	305
L	696	728	723	773	804	854	872	898	964	987	1097	1071
LS	789	821	817	867	916	966	1010	1035	1153	1176	1302	1276
LB	261	293	288	338	369	419	437	463	529	552	662	636
LBS	354	386	382	432	481	531	575	600	718	741	867	841

33 072 00 14

K107..

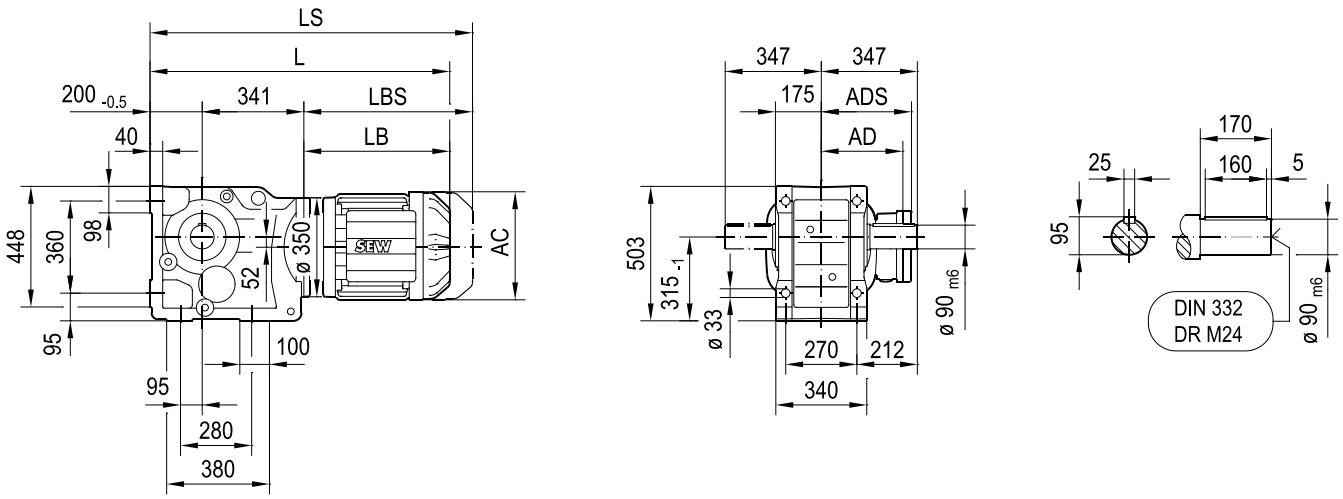

KA107B..

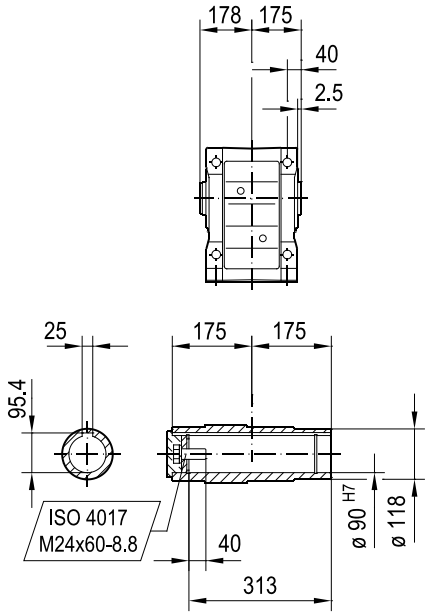

KH107B..

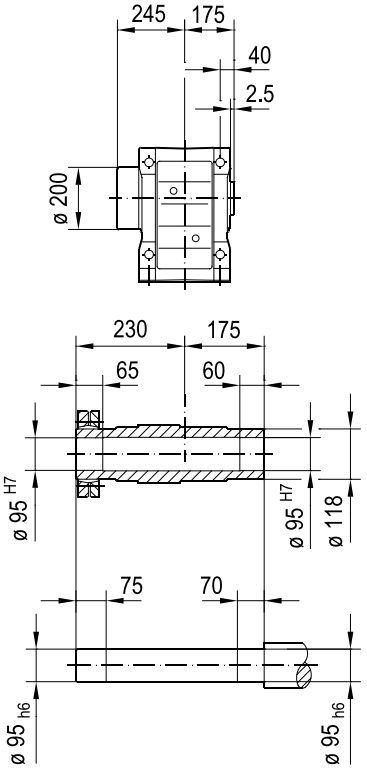

KV107B..

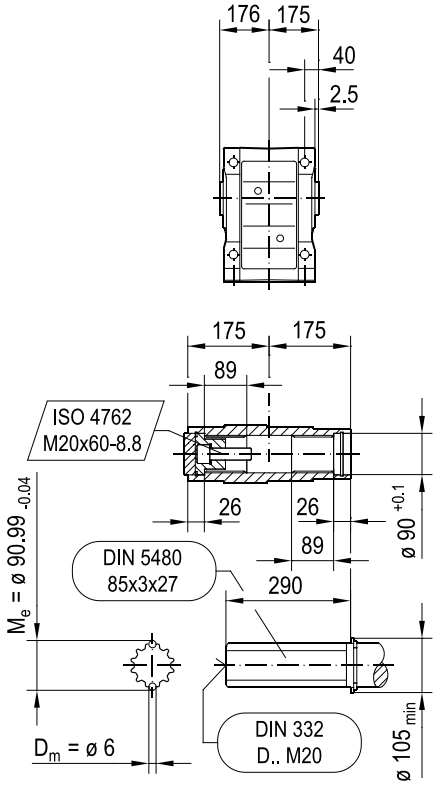

(→ 📖 4.1)	DRN										
	100LS	100L/LM	112M	132S	132M	132L	160..	180..	200L	225..	250M
AC	197	197	221	221	261	261	314	357	394	434	495
AD	157	157	170	170	228	228	253	268	283	305	394
ADS	158	158	172	172	228	228	253	268	283	305	394
L	823	873	904	954	972	998	1064	1087	1197	1171	1308
LS	917	967	1016	1066	1110	1135	1253	1276	1402	1376	1548
LB	282	332	363	413	431	457	523	546	656	630	767
LBS	376	426	475	525	569	594	712	735	861	835	1007

KF107..

33 073 00 14

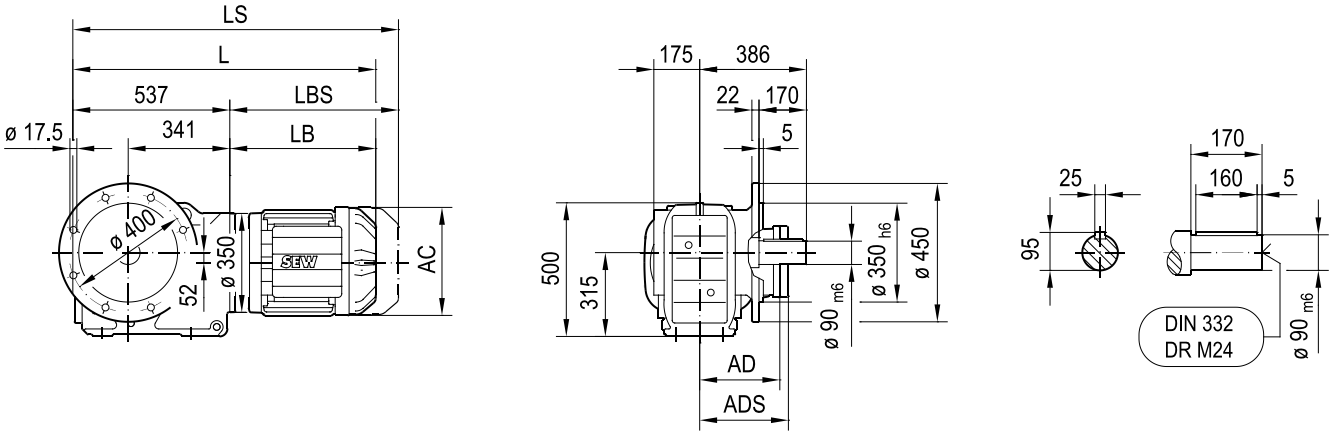

KAF107..

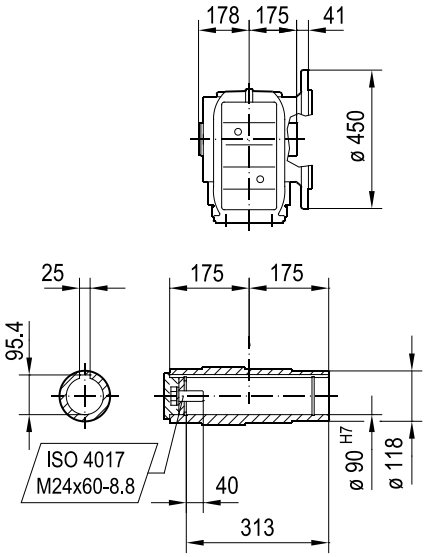

KHF107..

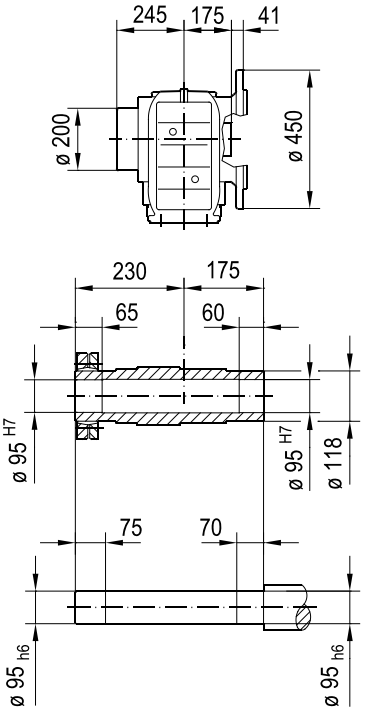

KVF107..

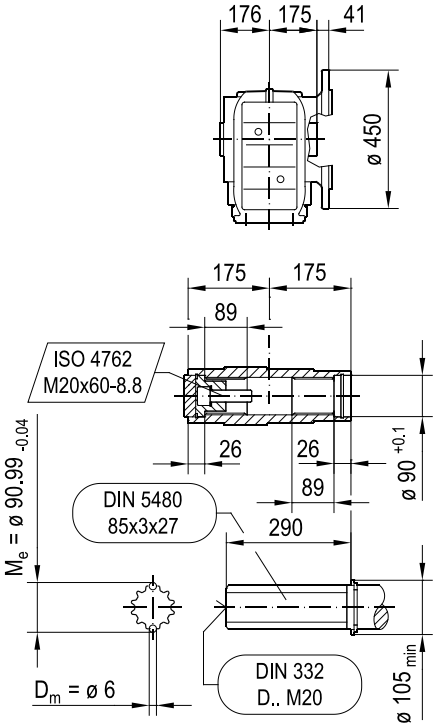

(→ 📖 4.1)	DRN										
	100LS	100L/LM	112M	132S	132M	132L	160..	180..	200L	225..	250M
AC	197	197	221	221	261	261	314	357	394	434	495
AD	157	157	170	170	228	228	253	268	283	305	394
ADS	158	158	172	172	228	228	253	268	283	305	394
L	819	869	900	950	968	994	1060	1083	1193	1167	1304
LS	913	963	1012	1062	1106	1131	1249	1272	1398	1372	1544
LB	282	332	363	413	431	457	523	546	656	630	767
LBS	376	426	475	525	569	594	712	735	861	835	1007

33 274 00 17

KM107..

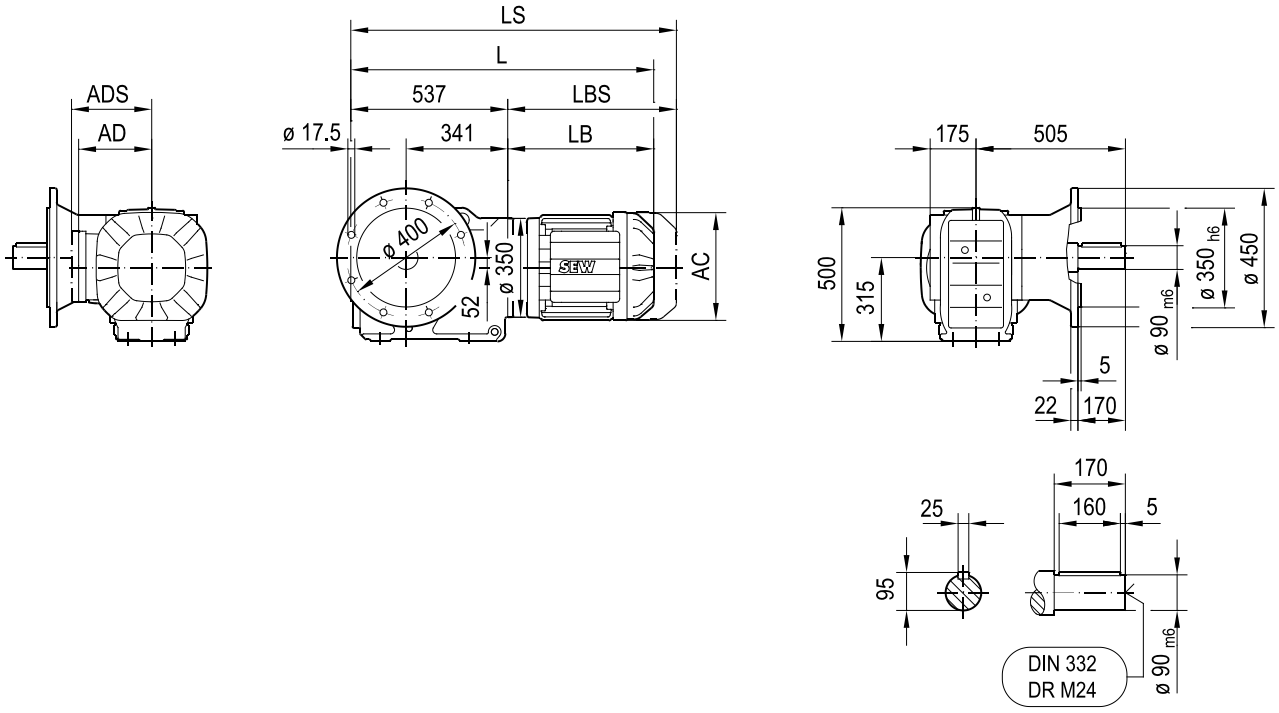

KAM107..

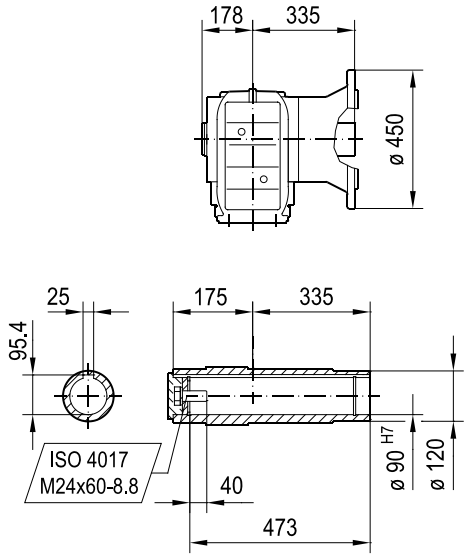

(→ 📖 4.1)	DRN										
	100LS	100L/LM	112M	132S	132M	132L	160..	180..	200L	225..	250M
AC	197	197	221	221	261	261	314	357	394	434	495
AD	157	157	170	170	228	228	253	268	283	305	394
ADS	158	158	172	172	228	228	253	268	283	305	394
L	819	869	900	950	968	994	1060	1083	1193	1167	1304
LS	913	963	1012	1062	1106	1131	1249	1272	1398	1372	1544
LB	282	332	363	413	431	457	523	546	656	630	767
LBS	376	426	475	525	569	594	712	735	861	835	1007

33 074 00 14

KA107..

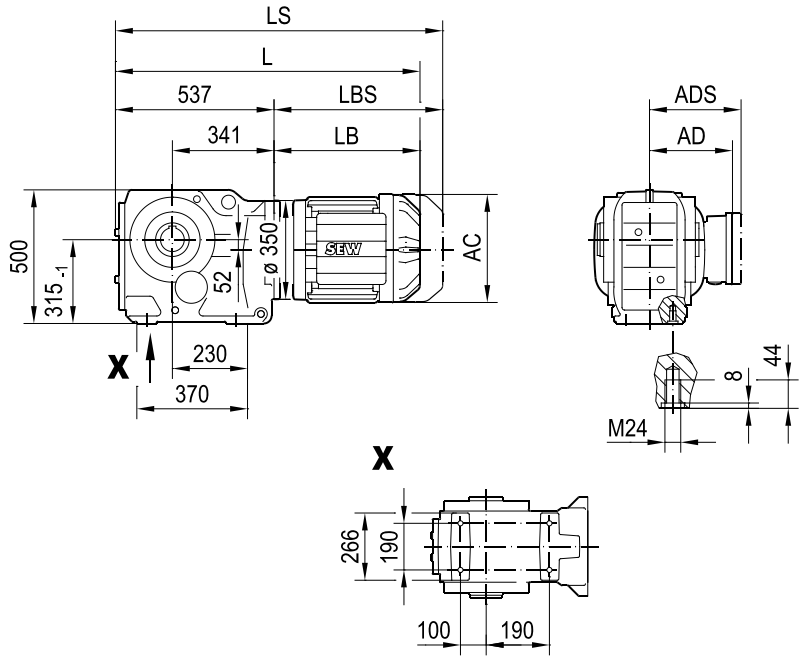

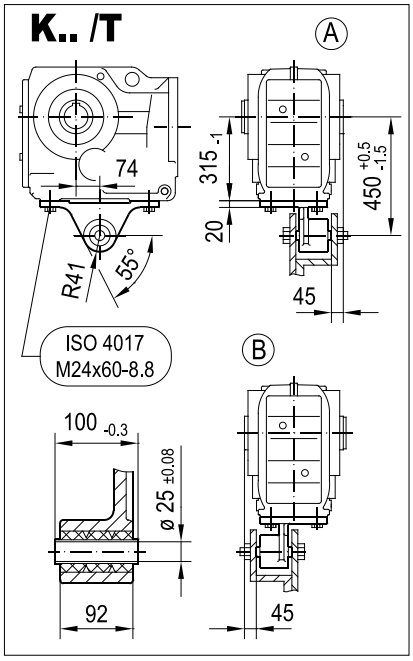

KA107..

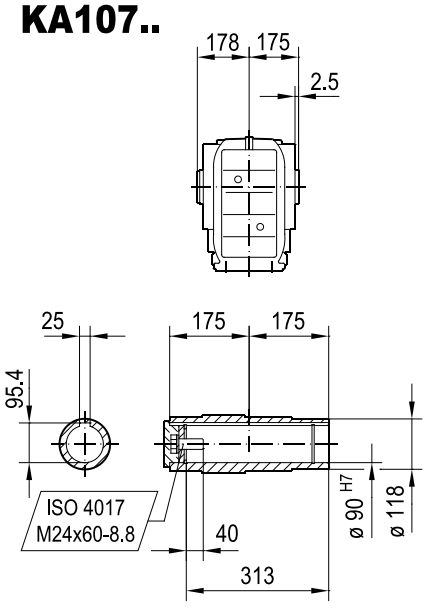

KH107..

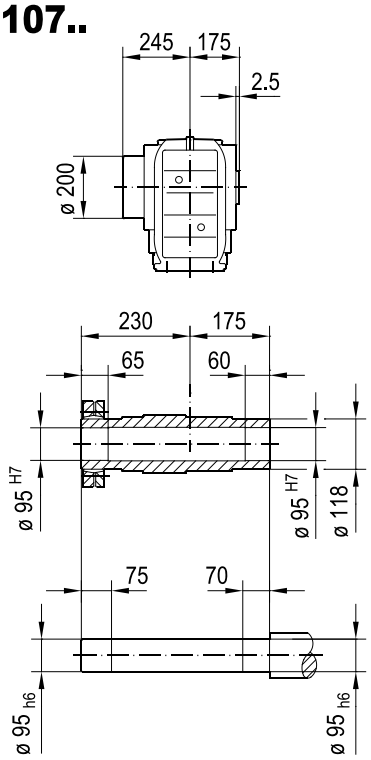

KV107..

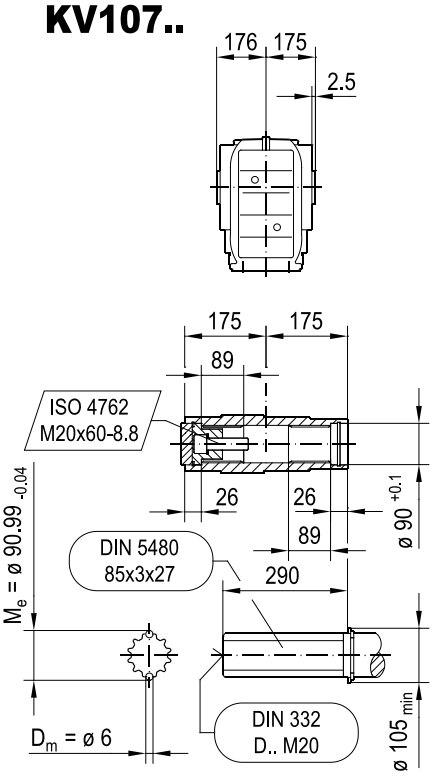

(→ 📖 4.1)	DRN										
	100LS	100L/LM	112M	132S	132M	132L	160..	180..	200L	225..	250M
AC	197	197	221	221	261	261	314	357	394	434	495
AD	157	157	170	170	228	228	253	268	283	305	394
ADS	158	158	172	172	228	228	253	268	283	305	394
L	819	869	900	950	968	994	1060	1083	1193	1167	1304
LS	913	963	1012	1062	1106	1131	1249	1272	1398	1372	1544
LB	282	332	363	413	431	457	523	546	656	630	767
LBS	376	426	475	525	569	594	712	735	861	835	1007

33 075 00 14

KAZ107..

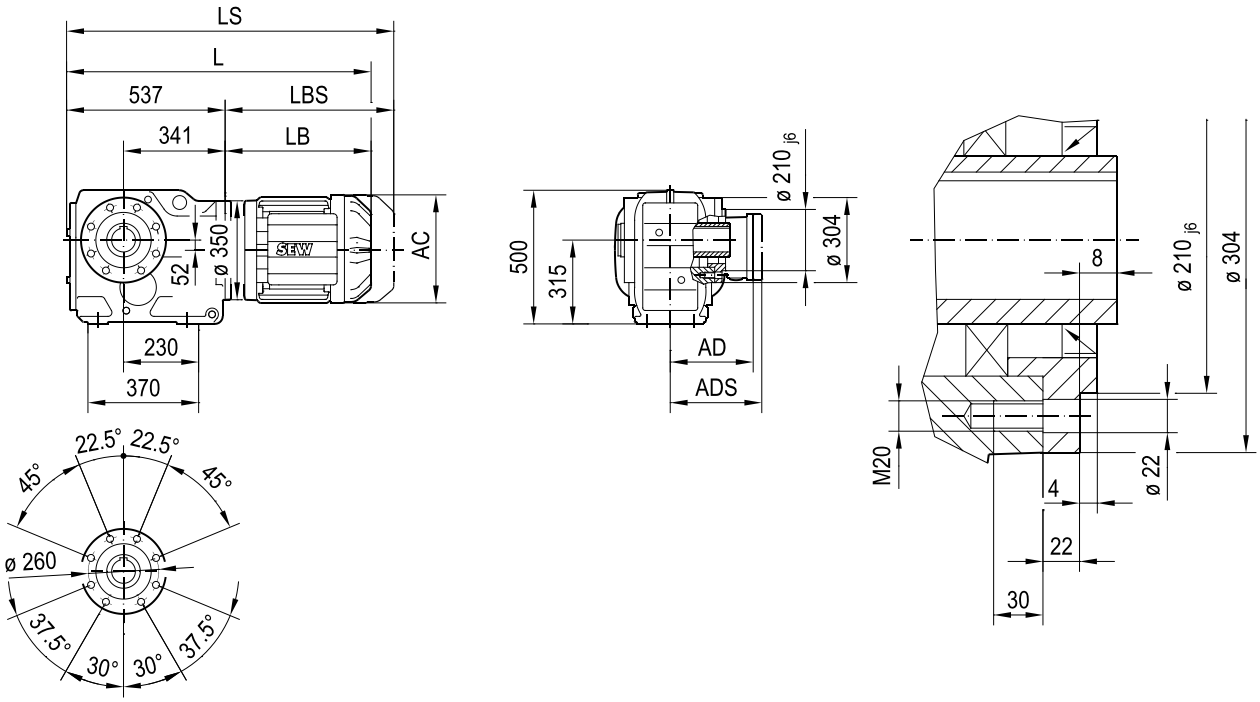

KAZ107..

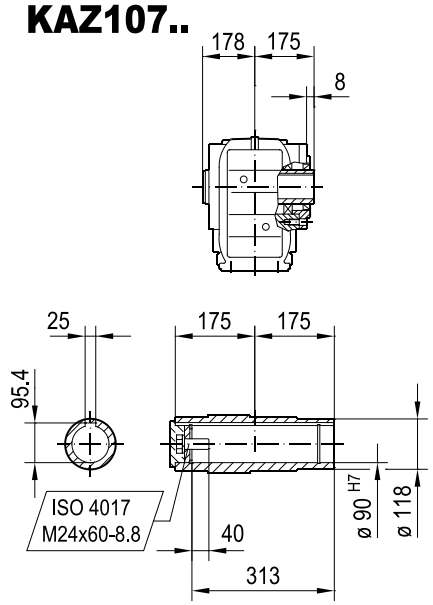

KHZ107..

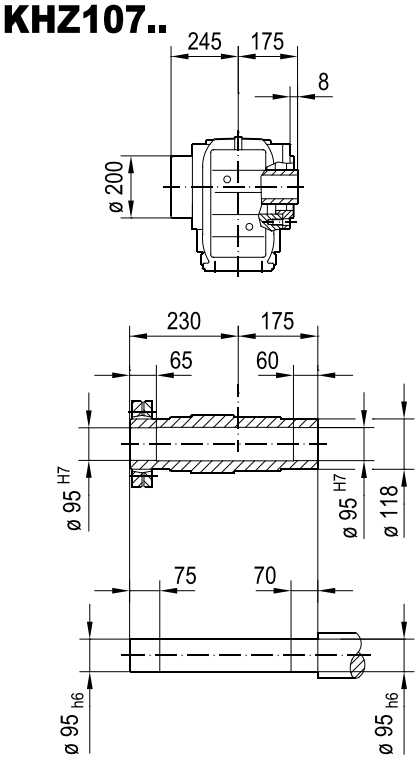

KVZ107..

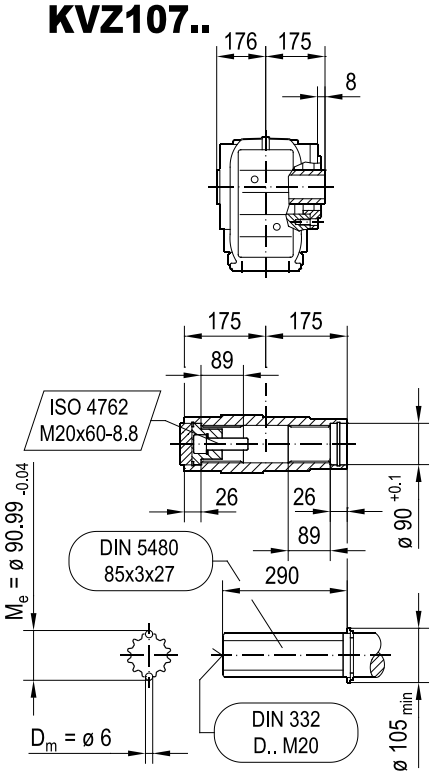

(→ 4.1)	DRN										
	100LS	100L/LM	112M	132S	132M	132L	160..	180..	200L	225..	250M
AC	197	197	221	221	261	261	314	357	394	434	495
AD	157	157	170	170	228	228	253	268	283	305	394
ADS	158	158	172	172	228	228	253	268	283	305	394
L	819	869	900	950	968	994	1060	1083	1193	1167	1304
LS	913	963	1012	1062	1106	1131	1249	1272	1398	1372	1544
LB	282	332	363	413	431	457	523	546	656	630	767
LBS	376	426	475	525	569	594	712	735	861	835	1007

KZ107..

33 239 01 15

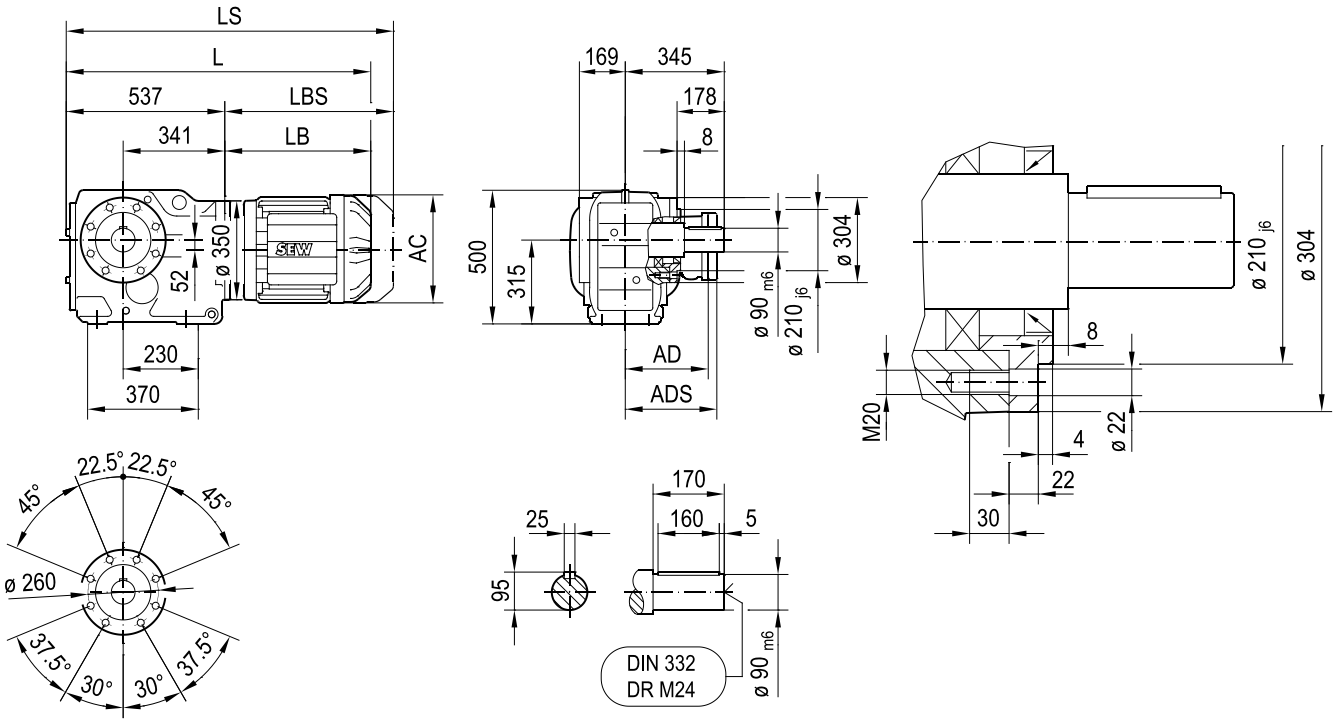

(→ 📖 4.1)	DRN										
	100LS	100L/LM	112M	132S	132M	132L	160..	180..	200L	225..	250M
AC	197	197	221	221	261	261	314	357	394	434	495
AD	157	157	170	170	228	228	253	268	283	305	394
ADS	158	158	172	172	228	228	253	268	283	305	394
L	819	869	900	950	968	994	1060	1083	1193	1167	1304
LS	913	963	1012	1062	1106	1131	1249	1272	1398	1372	1544
LB	282	332	363	413	431	457	523	546	656	630	767
LBS	376	426	475	525	569	594	712	735	861	835	1007

KT107..

33 076 02 14

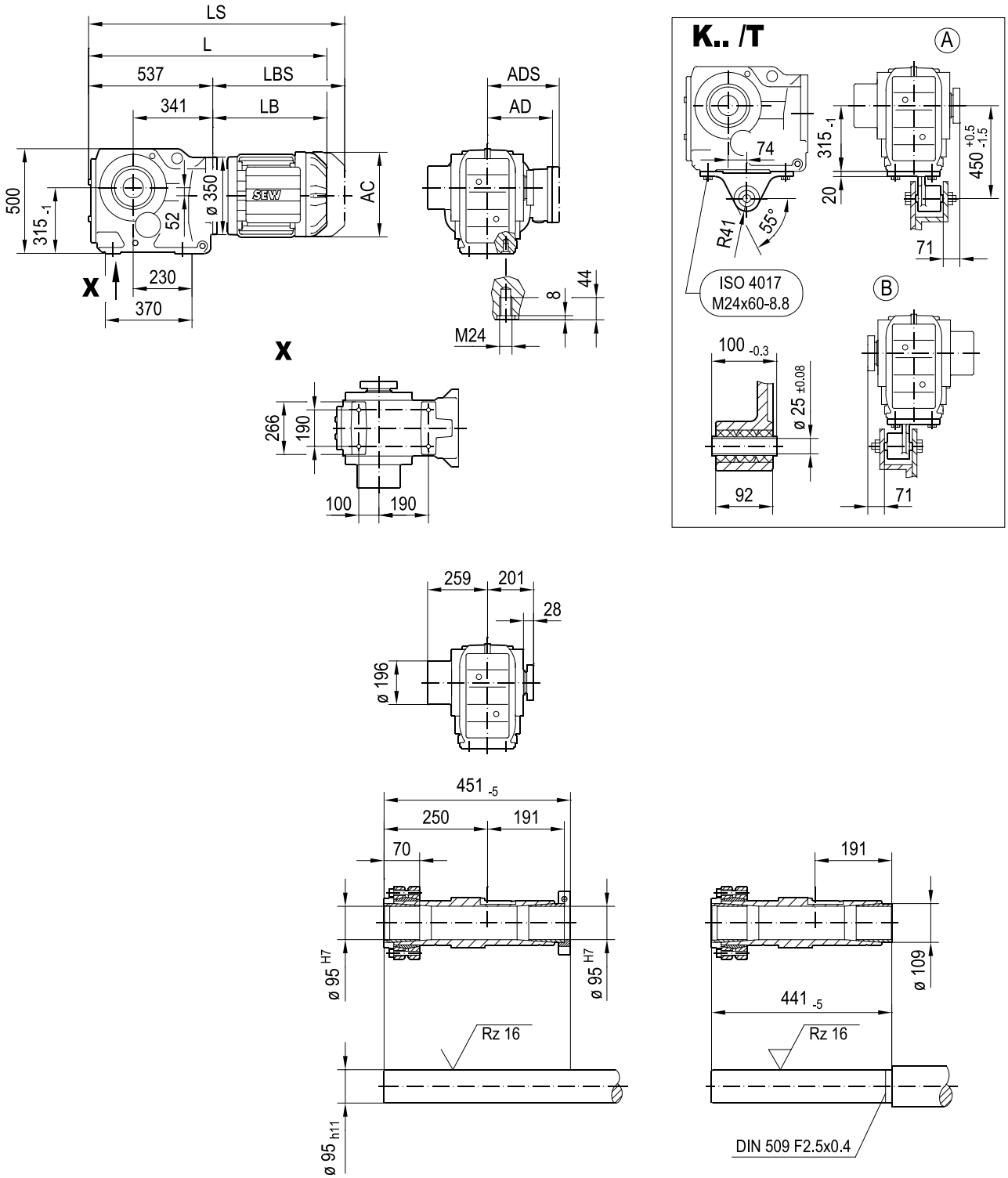

(→ 📖 4.1)	DRN										
	100LS	100L/LM	112M	132S	132M	132L	160..	180..	200L	225..	250M
AC	197	197	221	221	261	261	314	357	394	434	495
AD	157	157	170	170	228	228	253	268	283	305	394
ADS	158	158	172	172	228	228	253	268	283	305	394
L	819	869	900	950	968	994	1060	1083	1193	1167	1304
LS	913	963	1012	1062	1106	1131	1249	1272	1398	1372	1544
LB	282	332	363	413	431	457	523	546	656	630	767
LBS	376	426	475	525	569	594	712	735	861	835	1007

33 077 00 14

K127..

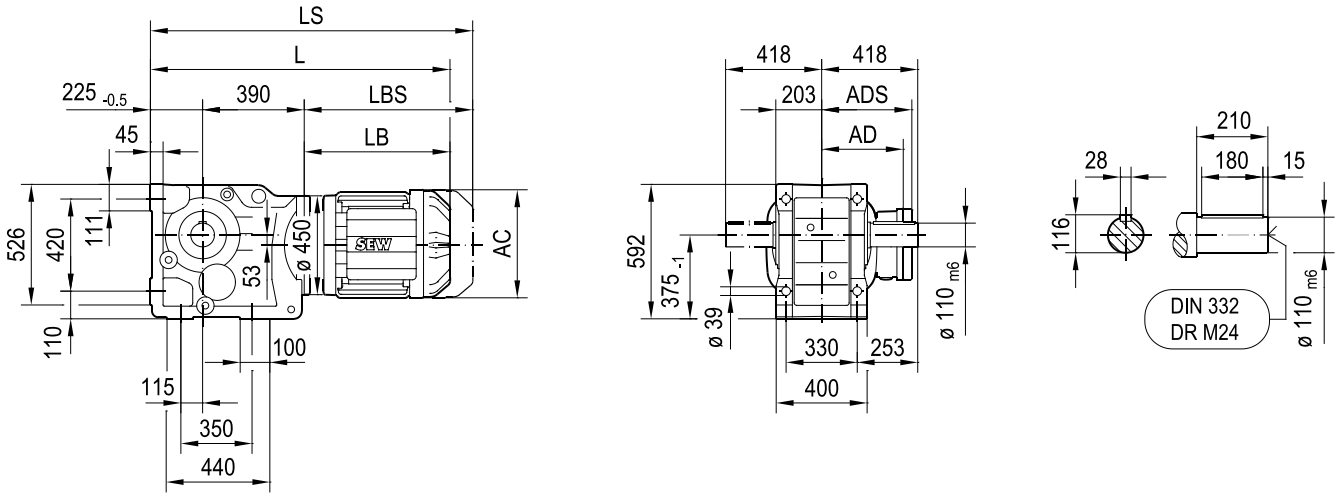

KA127B..

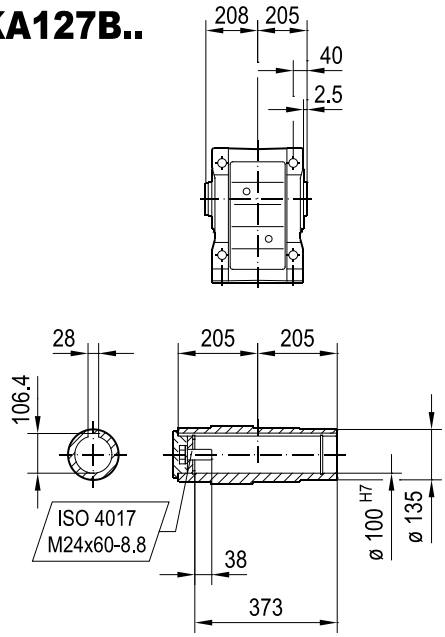

KH127B..

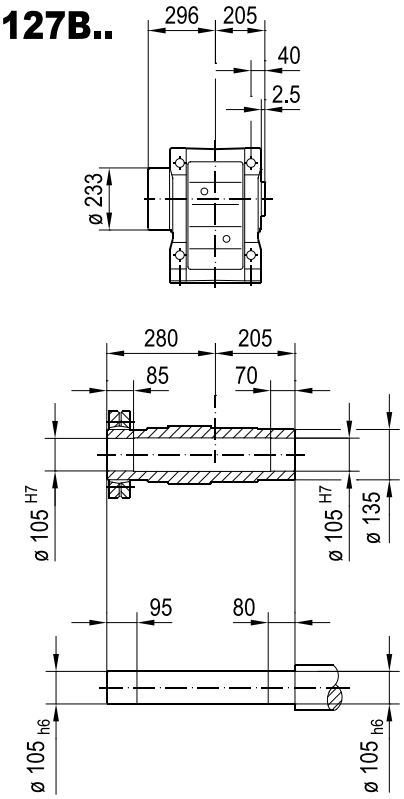

(→ 📖 4.1)	DRN									
	132S	132M	132L	160..	180..	200L	225..	250M	280S	280M
AC	221	261	261	314	357	394	434	495	495	495
AD	170	228	228	253	268	283	305	394	394	394
ADS	172	228	228	253	268	283	305	394	394	394
L	1013	1031	1057	1123	1146	1256	1230	1367	1367	1462
LS	1125	1169	1194	1312	1335	1461	1435	1607	1607	1702
LB	398	416	442	508	531	641	615	752	752	847
LBS	510	554	579	697	720	846	820	992	992	1087

33 078 00 14

KF127..

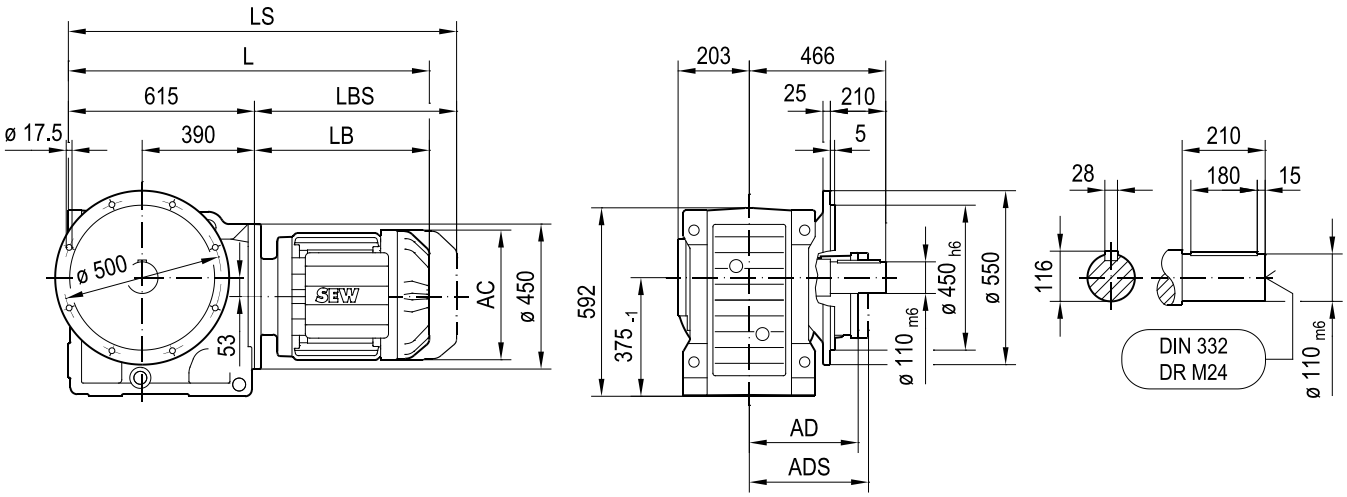

KAF127..

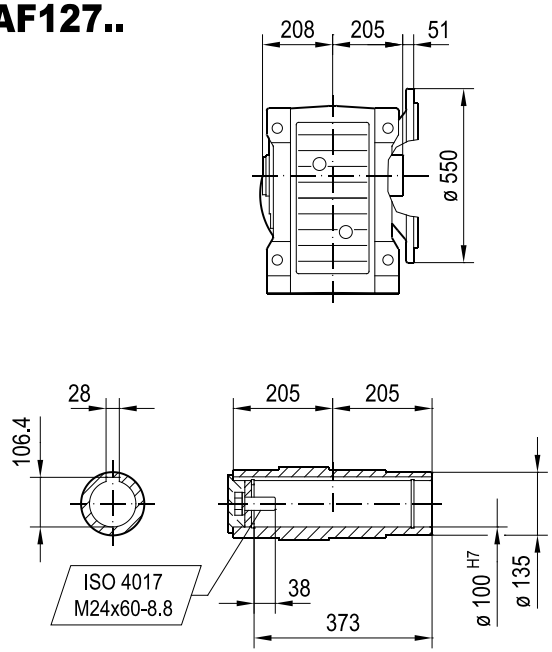

KHF127..

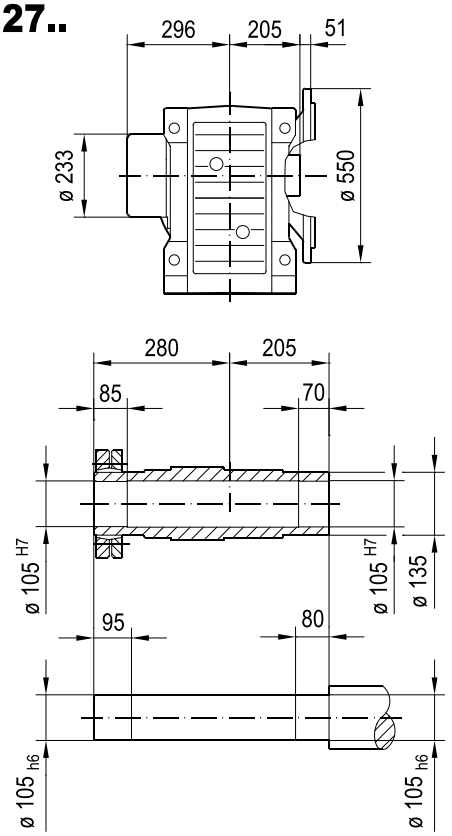

(→ 📖 4.1)	DRN									
	132S	132M	132L	160..	180..	200L	225..	250M	280S	280M
AC	221	261	261	314	357	394	434	495	495	495
AD	170	228	228	253	268	283	305	394	394	394
ADS	172	228	228	253	268	283	305	394	394	394
L	1013	1031	1057	1123	1146	1256	1230	1367	1367	1462
LS	1125	1169	1194	1312	1335	1461	1435	1607	1607	1702
LB	398	416	442	508	531	641	615	752	752	847
LBS	510	554	579	697	720	846	820	992	992	1087

33 275 00 17

KM127..

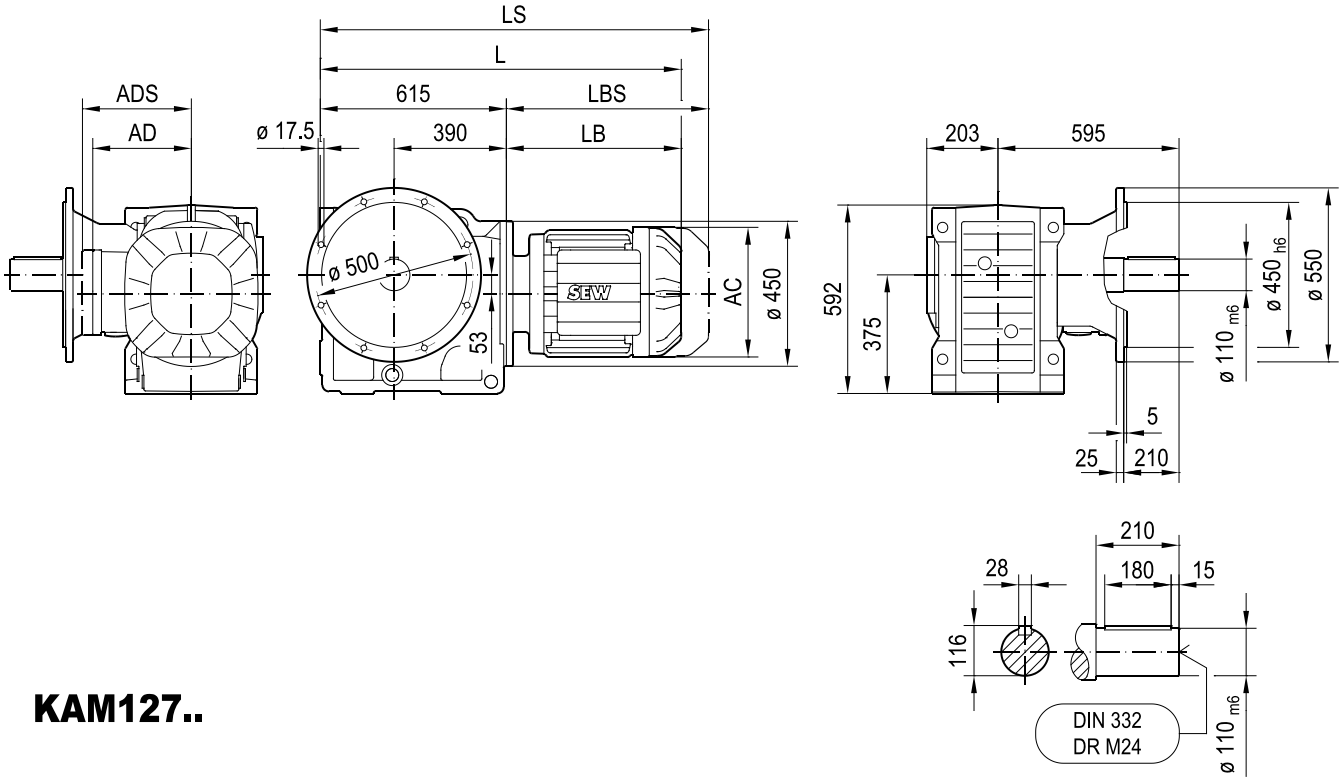

KAM127..

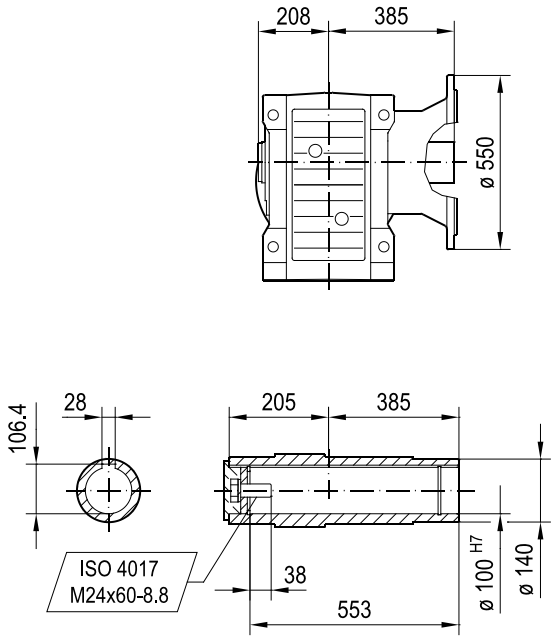

(→ 📖 4.1)	DRN									
	132S	132M	132L	160..	180..	200L	225..	250M	280S	280M
AC	221	261	261	314	357	394	434	495	495	495
AD	170	228	228	253	268	283	305	394	394	394
ADS	172	228	228	253	268	283	305	394	394	394
L	1013	1031	1057	1123	1146	1256	1230	1367	1367	1462
LS	1125	1169	1194	1312	1335	1461	1435	1607	1607	1702
LB	398	416	442	508	531	641	615	752	752	847
LBS	510	554	579	697	720	846	820	992	992	1087

33 079 03 14

KA127..

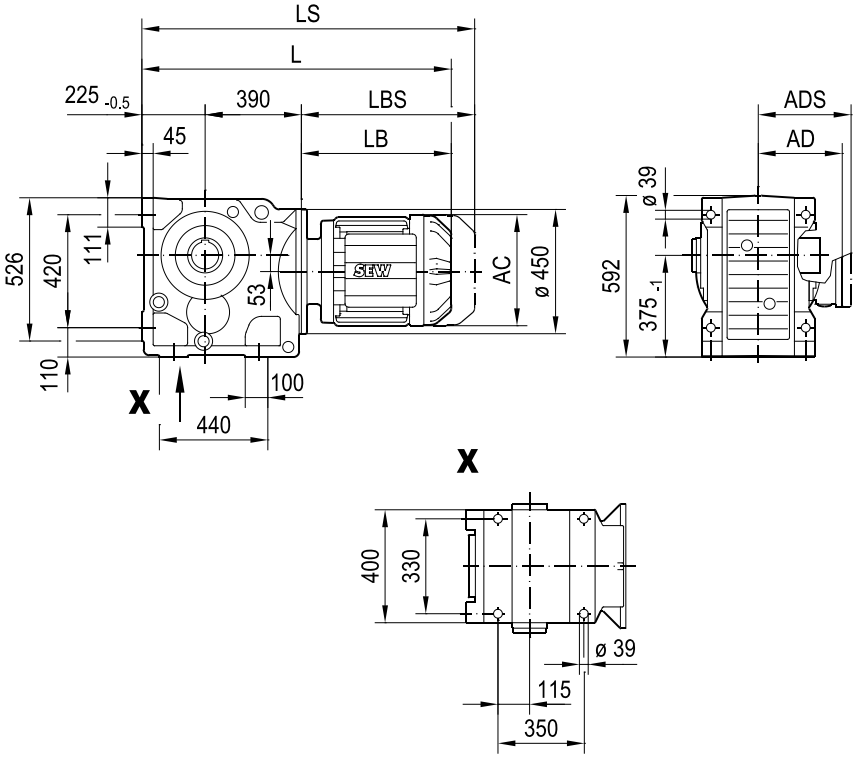

K.. /T

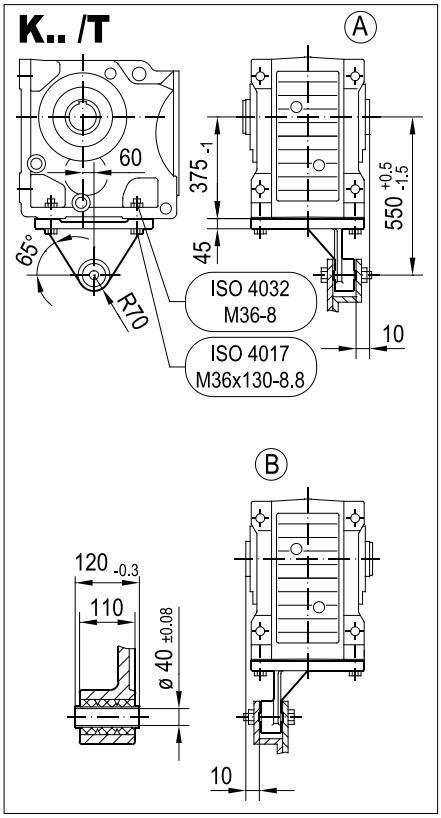

KA127..

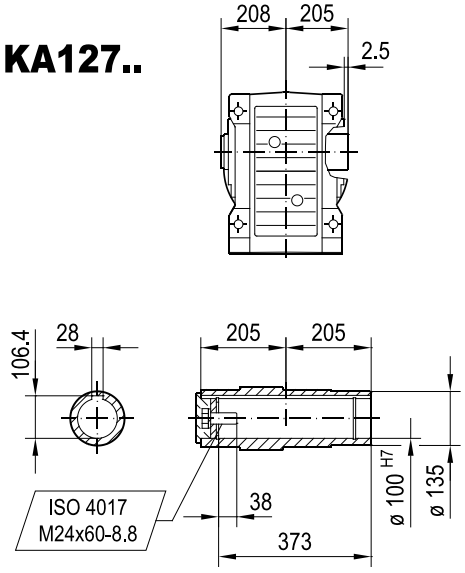

KH127..

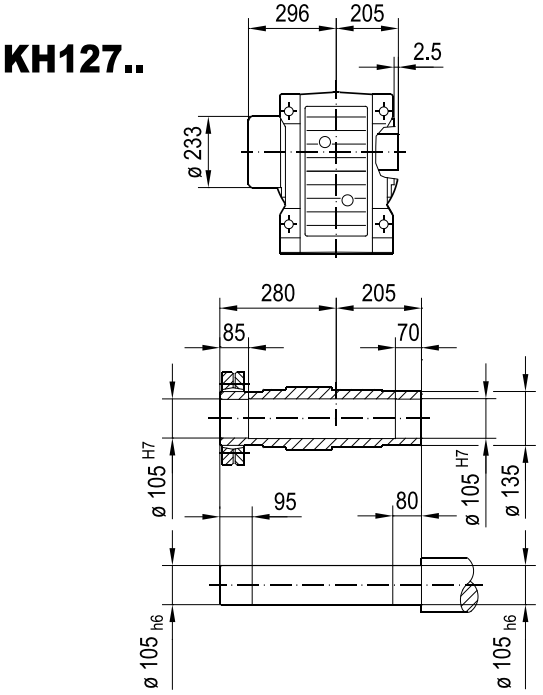

(→ 4.1)	DRN									
	132S	132M	132L	160..	180..	200L	225..	250M	280S	280M
AC	221	261	261	314	357	394	434	495	495	495
AD	170	228	228	253	268	283	305	394	394	394
ADS	172	228	228	253	268	283	305	394	394	394
L	1013	1031	1057	1123	1146	1256	1230	1367	1367	1462
LS	1125	1169	1194	1312	1335	1461	1435	1607	1607	1702
LB	398	416	442	508	531	641	615	752	752	847
LBS	510	554	579	697	720	846	820	992	992	1087

33 080 00 14

KAZ127..

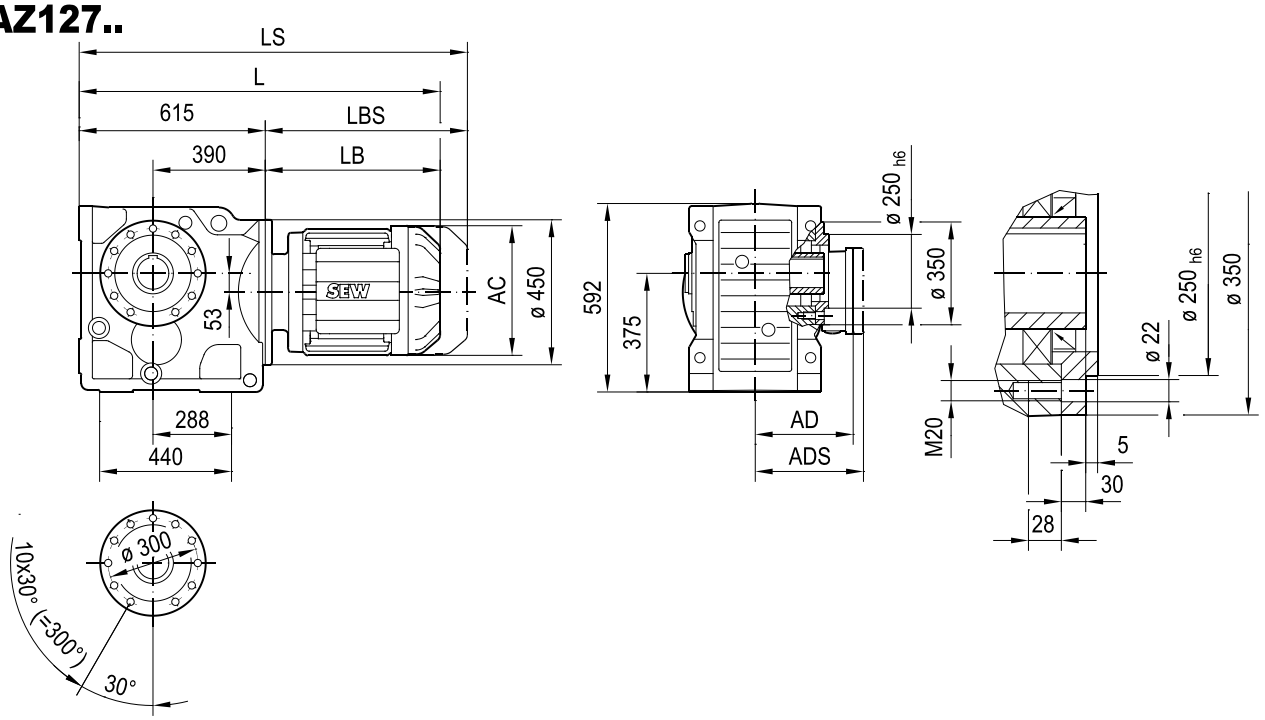

KAZ127..

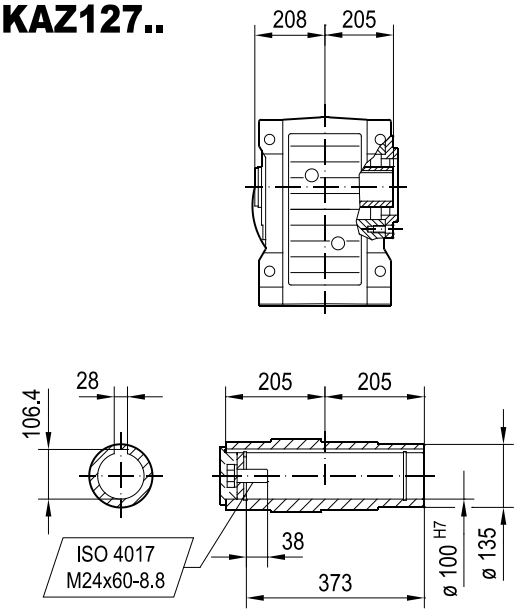

KHZ127..

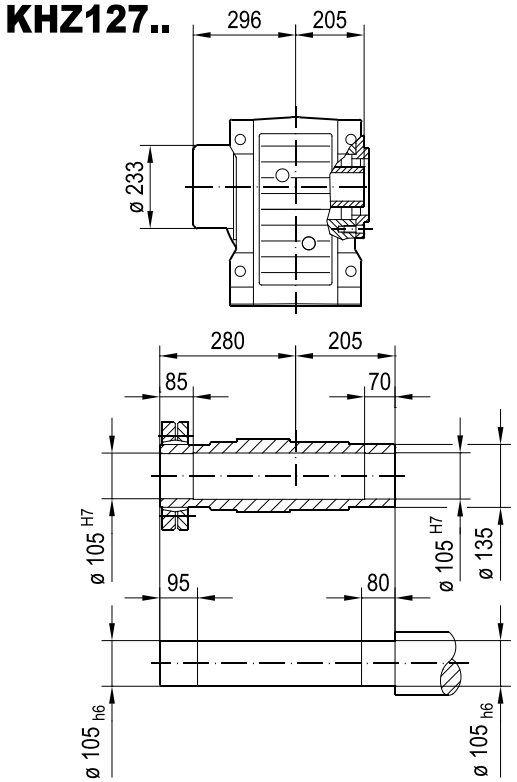

(→ 📖 4.1)	DRN									
	132S	132M	132L	160..	180..	200L	225..	250M	280S	280M
AC	221	261	261	314	357	394	434	495	495	495
AD	170	228	228	253	268	283	305	394	394	394
ADS	172	228	228	253	268	283	305	394	394	394
L	1013	1031	1057	1123	1146	1256	1230	1367	1367	1462
LS	1125	1169	1194	1312	1335	1461	1435	1607	1607	1702
LB	398	416	442	508	531	641	615	752	752	847
LBS	510	554	579	697	720	846	820	992	992	1087

33 240 00 15

KZ127..

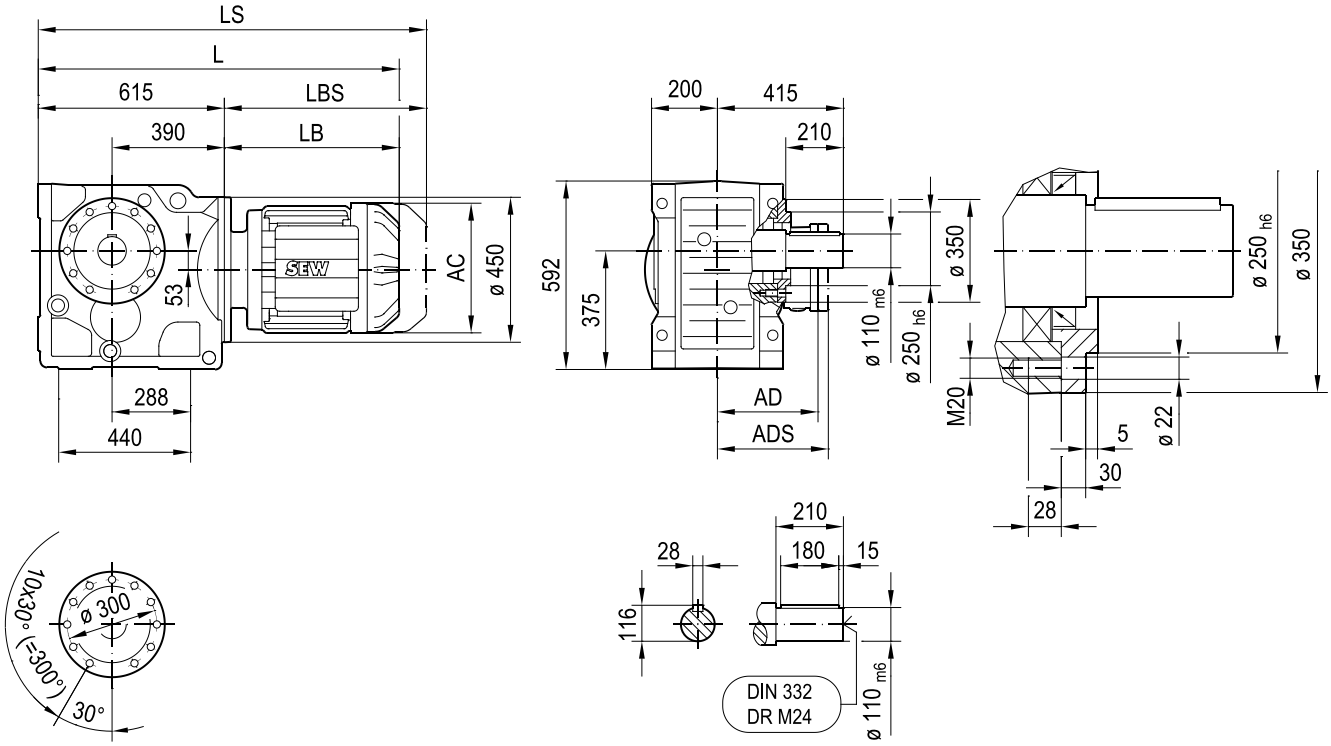

(→ 📖 4.1)	DRN									
	132S	132M	132L	160..	180..	200L	225..	250M	280S	280M
AC	221	261	261	314	357	394	434	495	495	495
AD	170	228	228	253	268	283	305	394	394	394
ADS	172	228	228	253	268	283	305	394	394	394
L	1013	1031	1057	1123	1146	1256	1230	1367	1367	1462
LS	1125	1169	1194	1312	1335	1461	1435	1607	1607	1702
LB	398	416	442	508	531	641	615	752	752	847
LBS	510	554	579	697	720	846	820	992	992	1087

33 081 04 14

KT127..

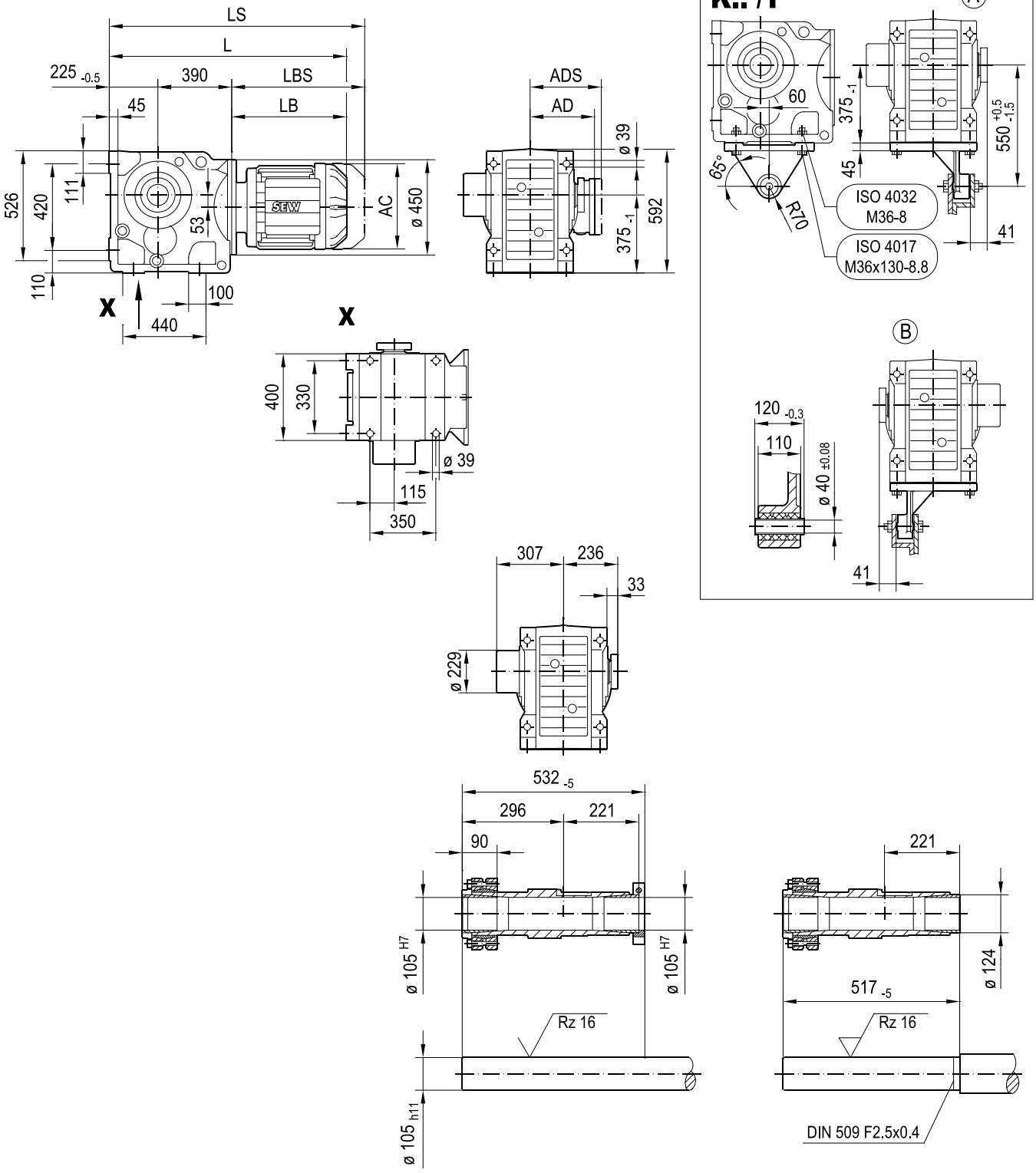

(→ 📖 4.1)	DRN									
	132S	132M	132L	160..	180..	200L	225..	250M	280S	280M
AC	221	261	261	314	357	394	434	495	495	495
AD	170	228	228	253	268	283	305	394	394	394
ADS	172	228	228	253	268	283	305	394	394	394
L	1013	1031	1057	1123	1146	1256	1230	1367	1367	1462
LS	1125	1169	1194	1312	1335	1461	1435	1607	1607	1702
LB	398	416	442	508	531	641	615	752	752	847
LBS	510	554	579	697	720	846	820	992	992	1087

33 082 00 14

K157..

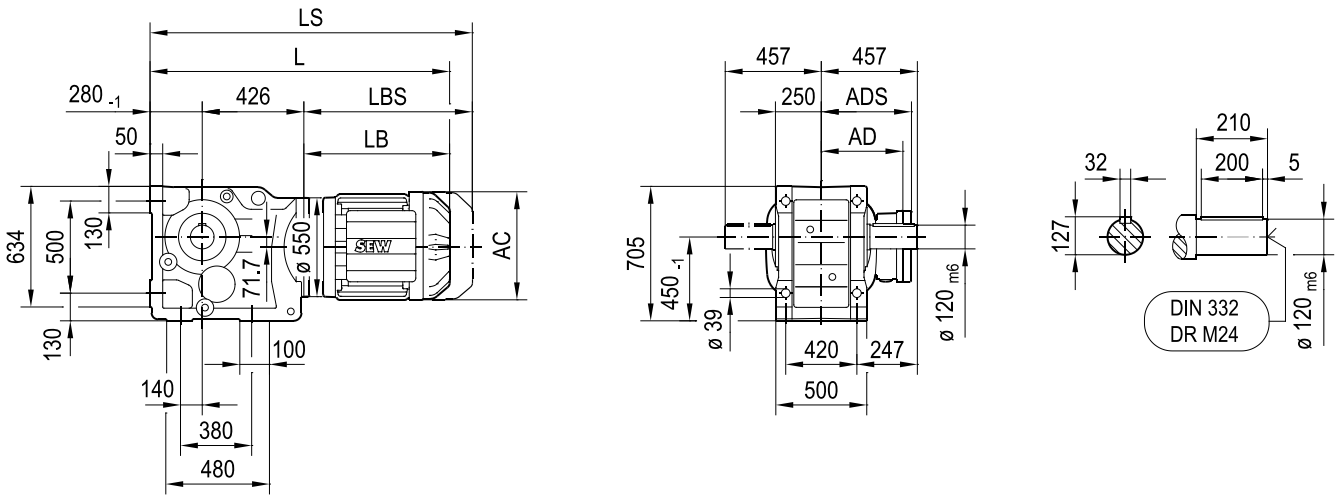

KA157B..

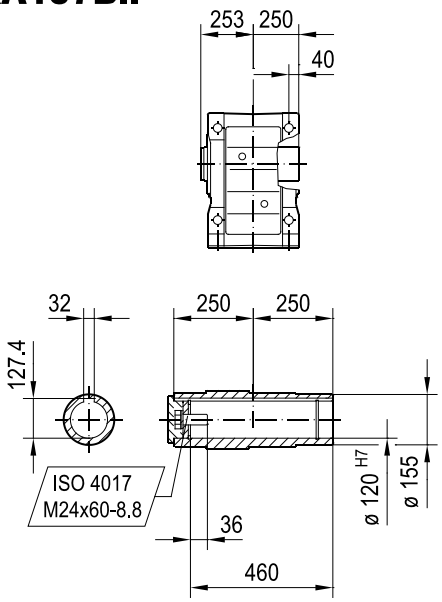

KH157B..

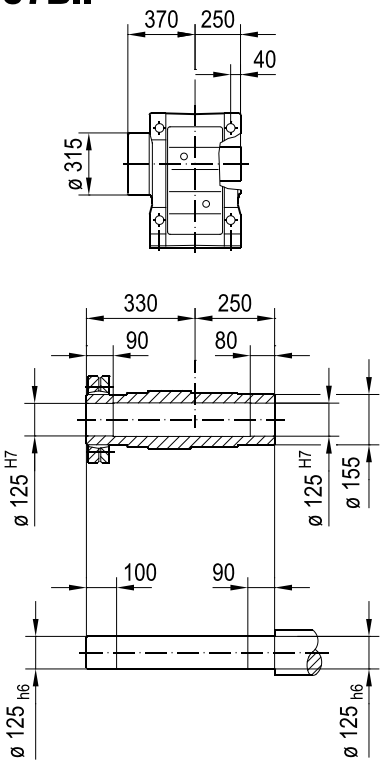

(→ 📖 4.1)	DRN									
	132L	160..	180..	200L	225..	250M	280S	280M	315S-M	315ME-H
AC	261	314	357	394	434	495	495	495	624	624
AD	228	253	268	283	305	394	394	394	506	506
ADS	228	253	268	283	305	394	394	394	506	506
L	1140	1206	1229	1339	1313	1450	1450	1545	1647	1777
LS	1277	1395	1418	1544	1518	1690	1690	1785	1898	2028
LB	434	500	523	633	607	744	744	839	941	1071
LBS	571	689	712	838	812	984	984	1079	1192	1322

33 083 00 14

KF157..

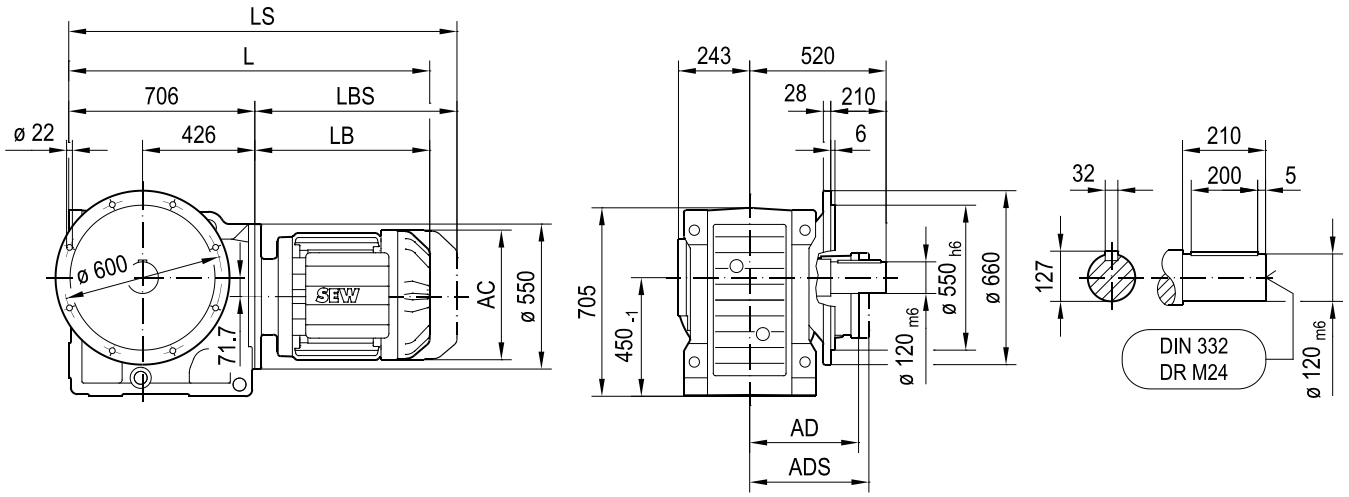

KAF157..

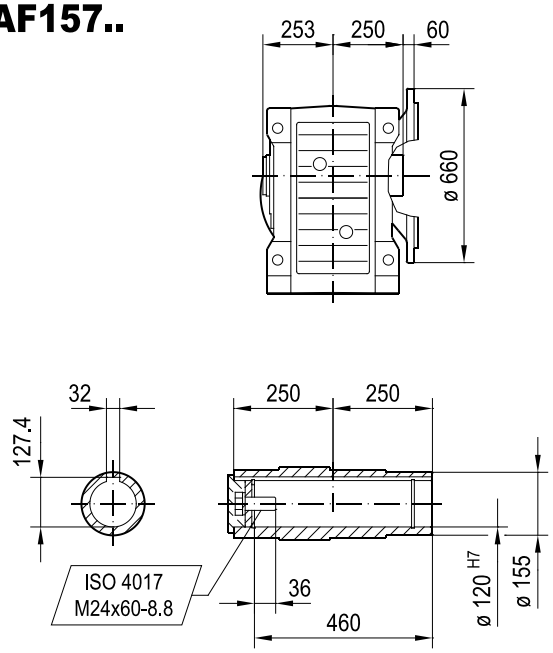

KHF157..

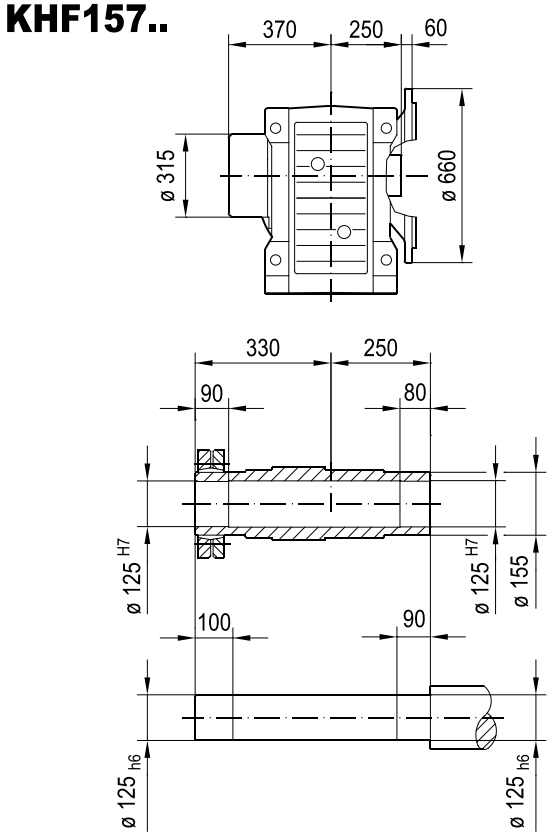

(→ 📖 4.1)	DRN									
	132L	160..	180..	200L	225..	250M	280S	280M	315S-M	315ME-H
AC	261	314	357	394	434	495	495	495	624	624
AD	228	253	268	283	305	394	394	394	506	506
ADS	228	253	268	283	305	394	394	394	506	506
L	1140	1206	1229	1339	1313	1450	1450	1545	1647	1777
LS	1277	1395	1418	1544	1518	1690	1690	1785	1898	2028
LB	434	500	523	633	607	744	744	839	941	1071
LBS	571	689	712	838	812	984	984	1079	1192	1322

33 276 00 17

KM157..

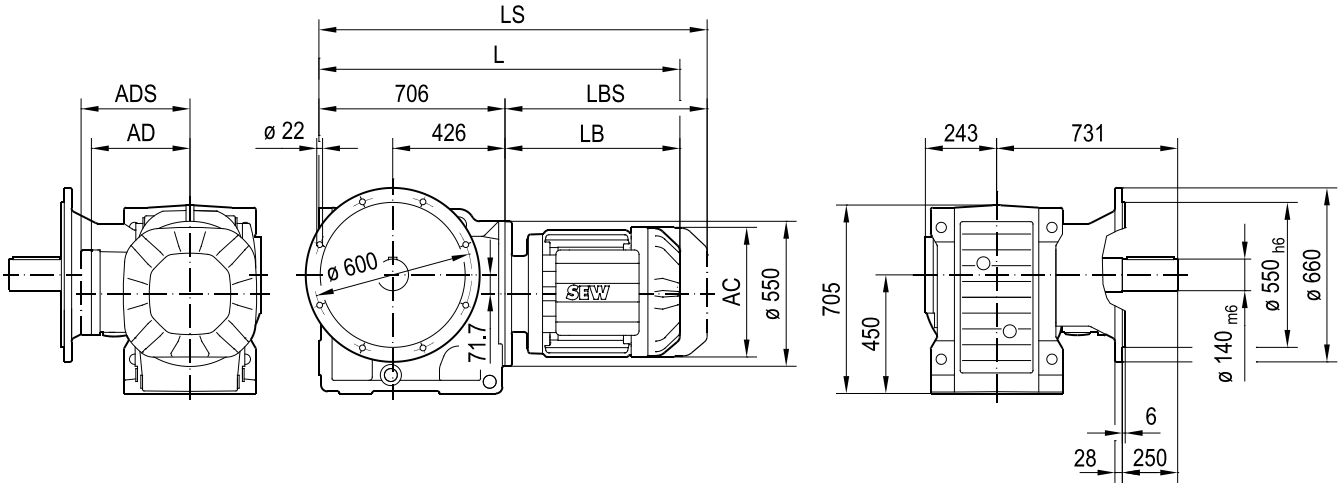

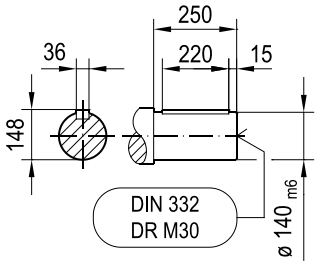

KAM157..

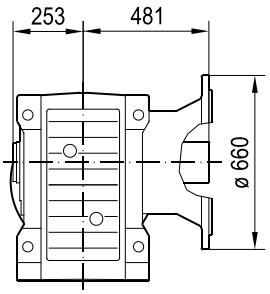

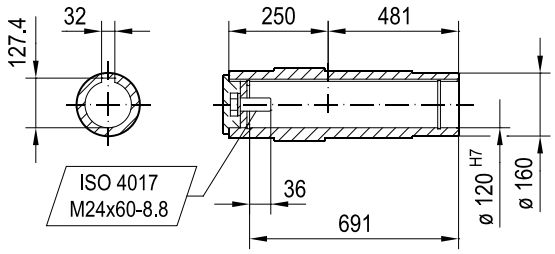

(→ 📖 4.1)	DRN									
	132L	160..	180..	200L	225..	250M	280S	280M	315S-M	315ME-H
AC	261	314	357	394	434	495	495	495	624	624
AD	228	253	268	283	305	394	394	394	506	506
ADS	228	253	268	283	305	394	394	394	506	506
L	1140	1206	1229	1339	1313	1450	1450	1545	1647	1777
LS	1277	1395	1418	1544	1518	1690	1690	1785	1898	2028
LB	434	500	523	633	607	744	744	839	941	1071
LBS	571	689	712	838	812	984	984	1079	1192	1322

33 084 03 14

KA157..

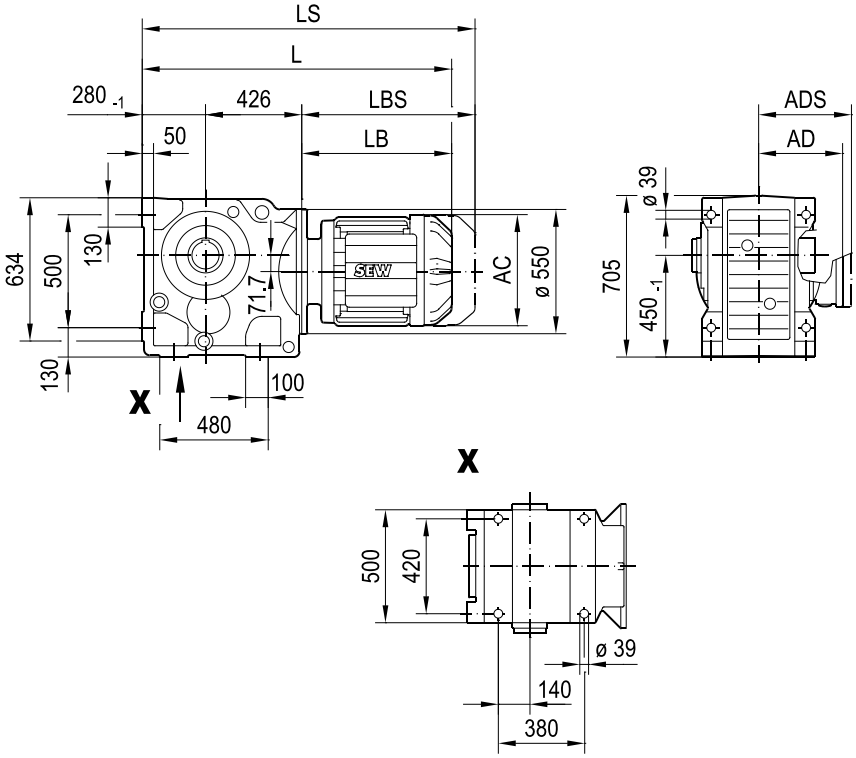

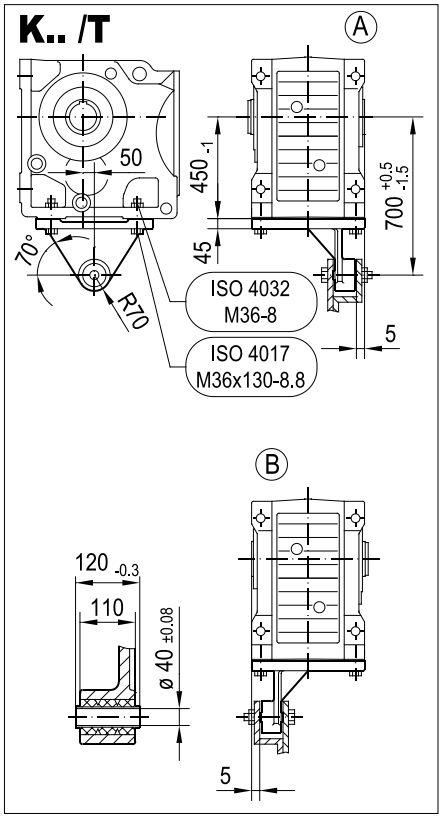

KA157..

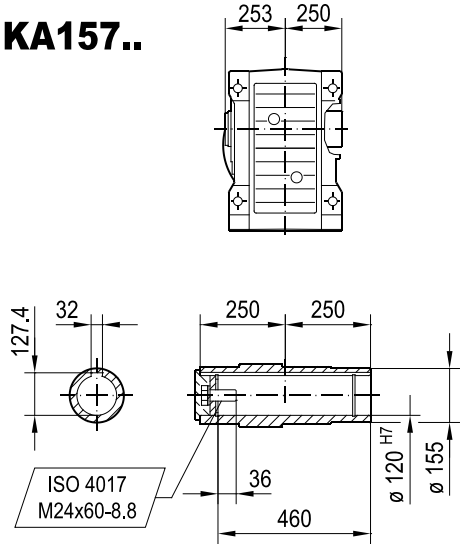

KH157..

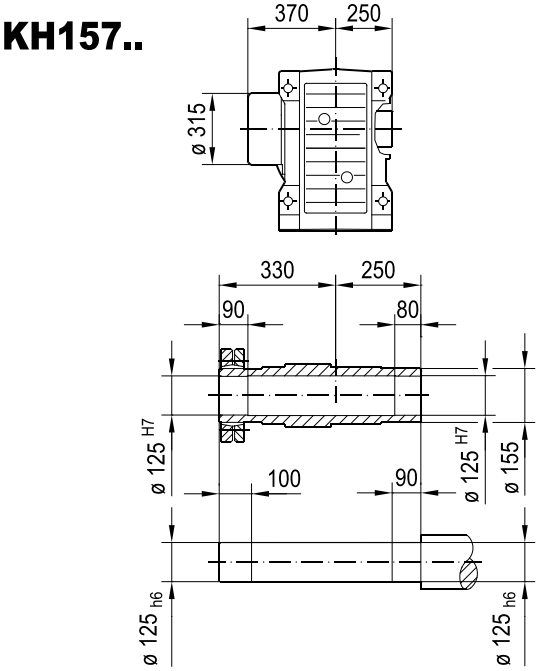

(→ 📖 4.1)	DRN									
	132L	160..	180..	200L	225..	250M	280S	280M	315S-M	315ME-H
AC	261	314	357	394	434	495	495	495	624	624
AD	228	253	268	283	305	394	394	394	506	506
ADS	228	253	268	283	305	394	394	394	506	506
L	1140	1206	1229	1339	1313	1450	1450	1545	1647	1777
LS	1277	1395	1418	1544	1518	1690	1690	1785	1898	2028
LB	434	500	523	633	607	744	744	839	941	1071
LBS	571	689	712	838	812	984	984	1079	1192	1322

33 085 00 14

KAZ157..

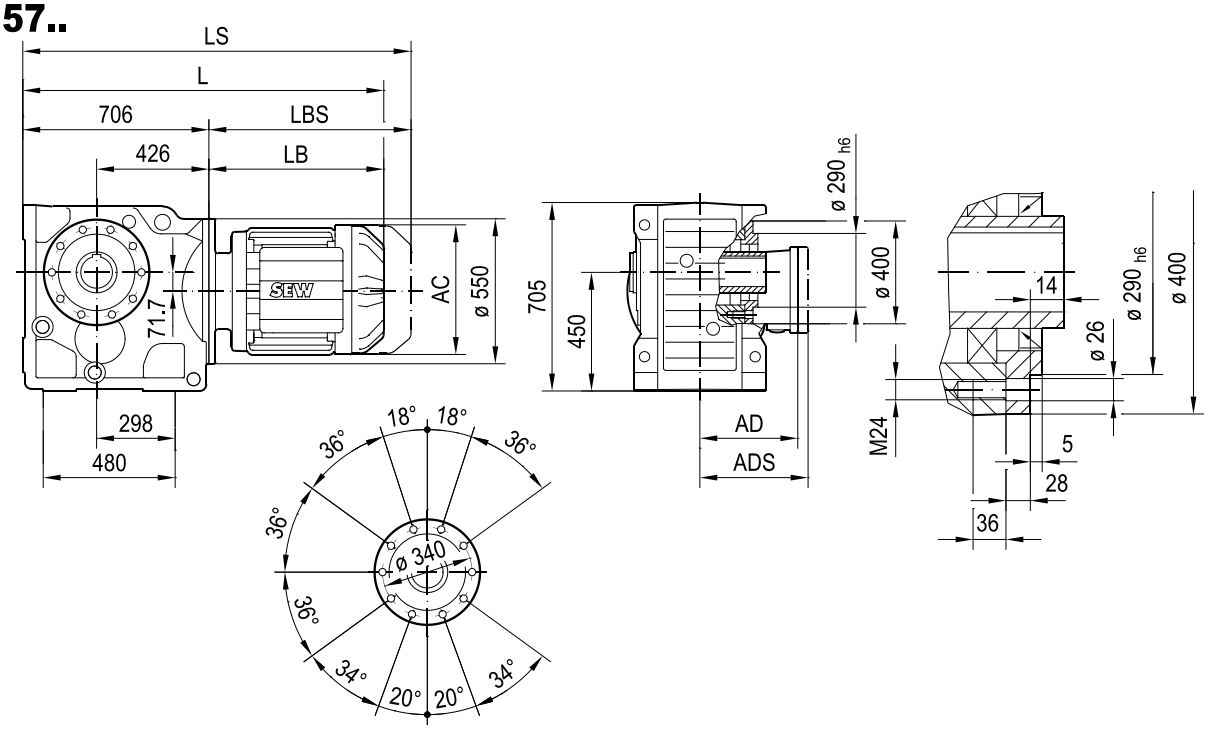

KAZ157..

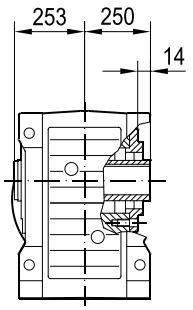

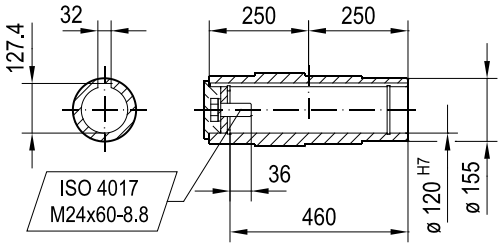

KHZ157..

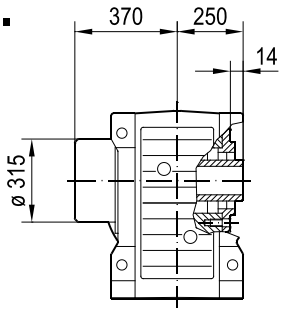

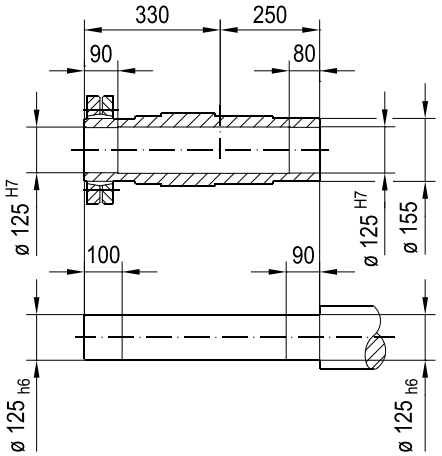

(→ 📖 4.1)	DRN									
	132L	160..	180..	200L	225..	250M	280S	280M	315S-M	315ME-H
AC	261	314	357	394	434	495	495	495	624	624
AD	228	253	268	283	305	394	394	394	506	506
ADS	228	253	268	283	305	394	394	394	506	506
L	1140	1206	1229	1339	1313	1450	1450	1545	1647	1777
LS	1277	1395	1418	1544	1518	1690	1690	1785	1898	2028
LB	434	500	523	633	607	744	744	839	941	1071
LBS	571	689	712	838	812	984	984	1079	1192	1322

33 241 01 15

KZ157..

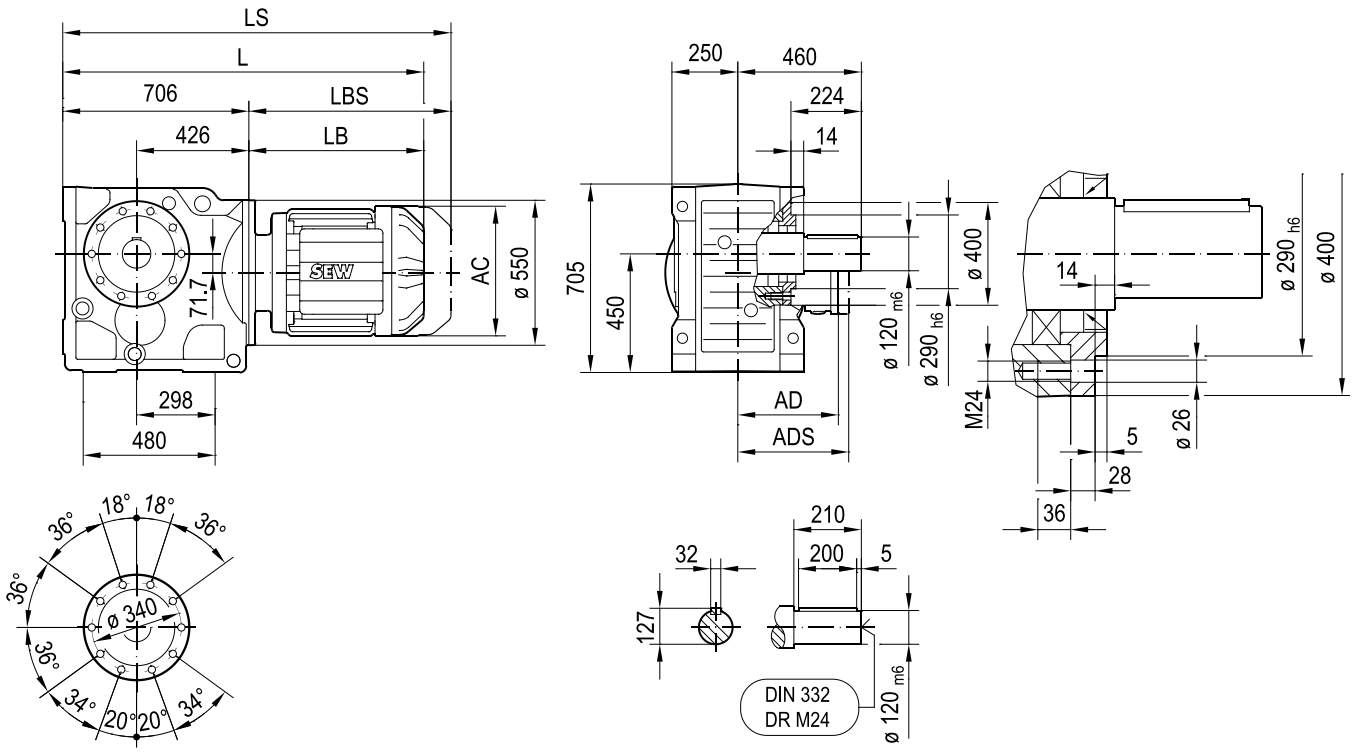

(→ 📖 4.1)	DRN									
	132L	160..	180..	200L	225..	250M	280S	280M	315S-M	315ME-H
AC	261	314	357	394	434	495	495	495	624	624
AD	228	253	268	283	305	394	394	394	506	506
ADS	228	253	268	283	305	394	394	394	506	506
L	1140	1206	1229	1339	1313	1450	1450	1545	1647	1777
LS	1277	1395	1418	1544	1518	1690	1690	1785	1898	2028
LB	434	500	523	633	607	744	744	839	941	1071
LBS	571	689	712	838	812	984	984	1079	1192	1322

33 086 04 14

KT157..

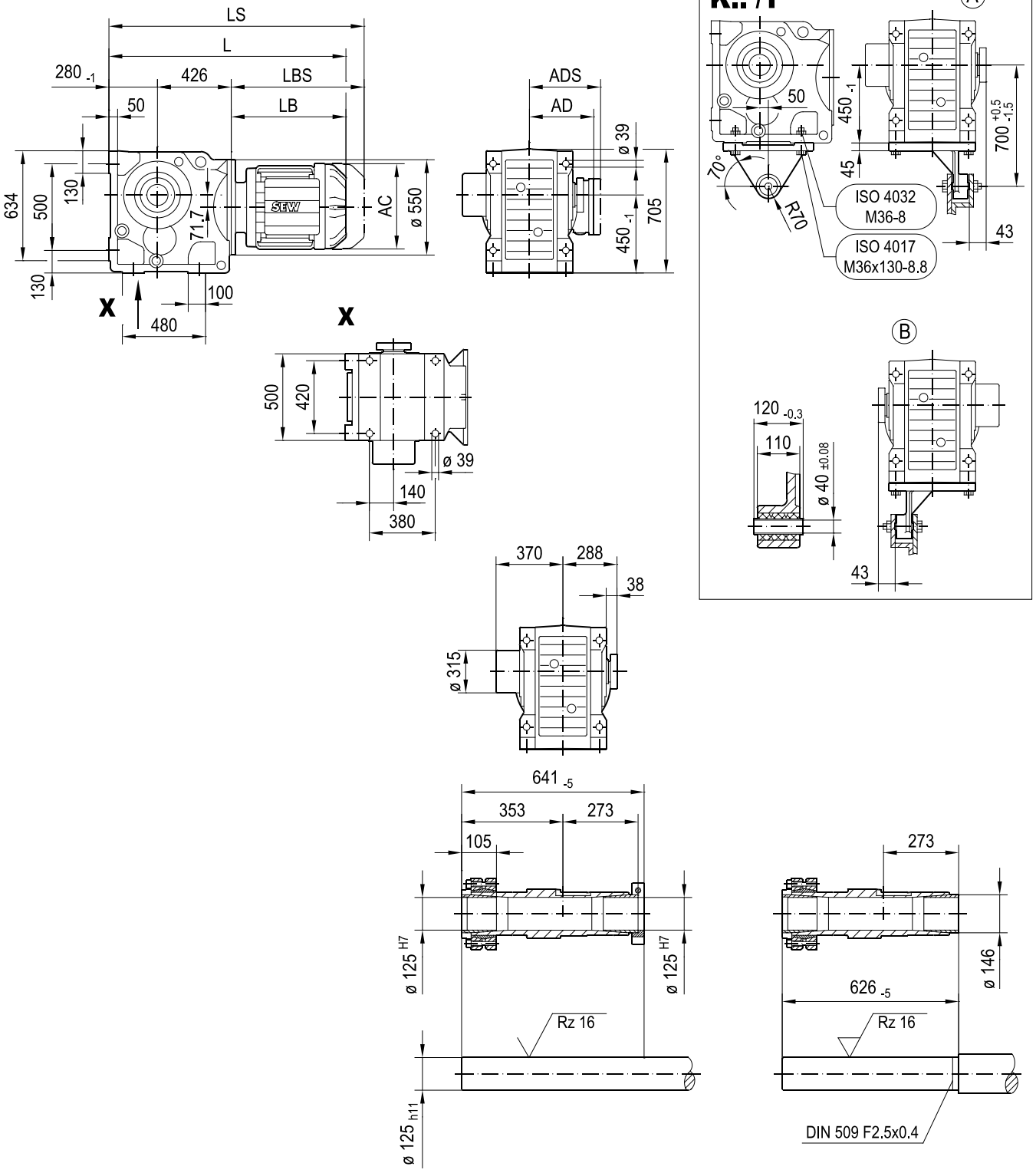

(→ 📖 4.1)	DRN									
	132L	160..	180..	200L	225..	250M	280S	280M	315S-M	315ME-H
AC	261	314	357	394	434	495	495	495	624	624
AD	228	253	268	283	305	394	394	394	506	506
ADS	228	253	268	283	305	394	394	394	506	506
L	1140	1206	1229	1339	1313	1450	1450	1545	1647	1777
LS	1277	1395	1418	1544	1518	1690	1690	1785	1898	2028
LB	434	500	523	633	607	744	744	839	941	1071
LBS	571	689	712	838	812	984	984	1079	1192	1322

33 087 00 14

K167..

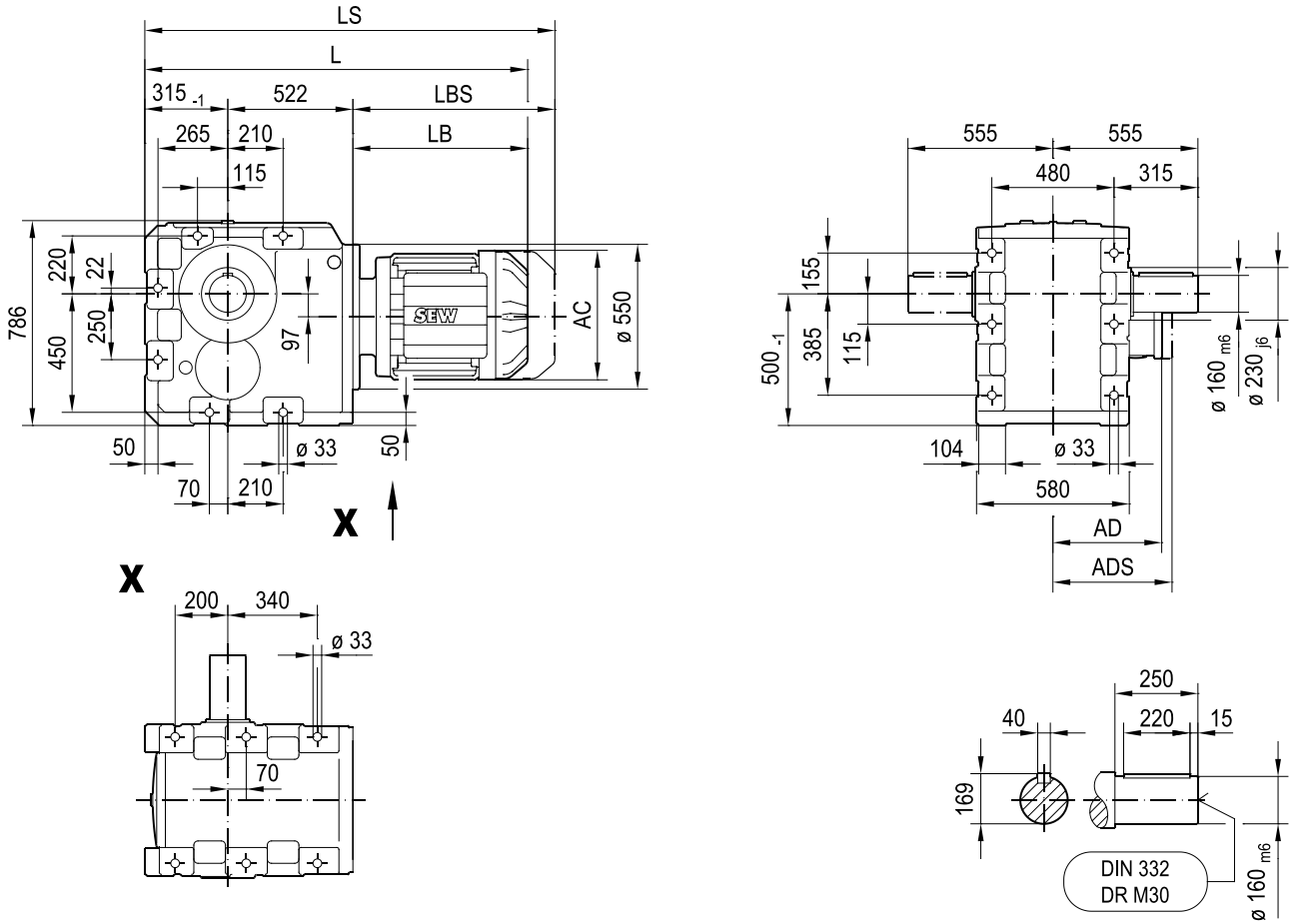

KH167B..

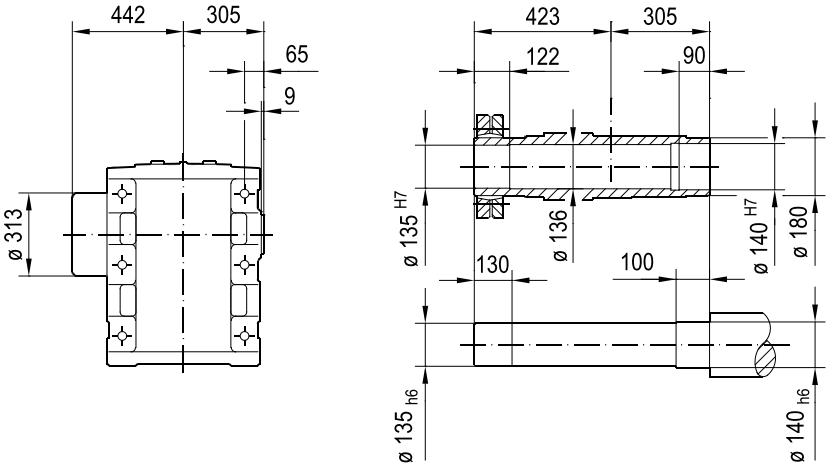

(→ 📖 4.1)	DRN									
	132L	160..	180..	200L	225..	250M	280S	280M	315S-M	315ME-H
AC	261	314	357	394	434	495	495	495	624	624
AD	228	253	268	283	305	394	394	394	506	506
ADS	228	253	268	283	305	394	394	394	506	506
L	1271	1337	1360	1470	1444	1581	1581	1676	1778	1908
LS	1408	1526	1549	1675	1649	1821	1821	1916	2029	2159
LB	434	500	523	633	607	744	744	839	941	1071
LBS	571	689	712	838	812	984	984	1079	1192	1322

33 088 00 14

KH167..

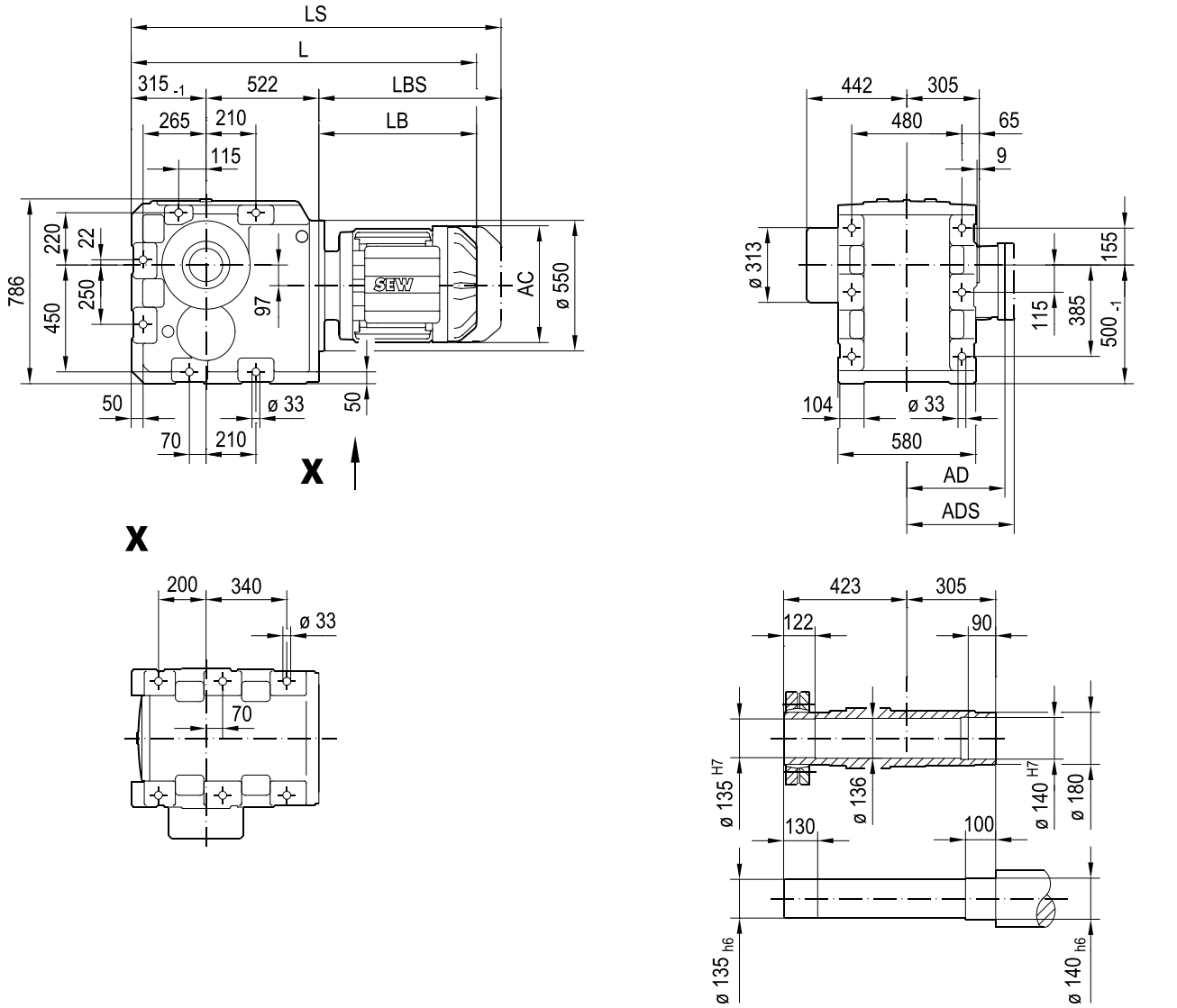

(→ 📖 4.1)	DRN									
	132L	160..	180..	200L	225..	250M	280S	280M	315S-M	315ME-H
AC	261	314	357	394	434	495	495	495	624	624
AD	228	253	268	283	305	394	394	394	506	506
ADS	228	253	268	283	305	394	394	394	506	506
L	1271	1337	1360	1470	1444	1581	1581	1676	1778	1908
LS	1408	1526	1549	1675	1649	1821	1821	1916	2029	2159
LB	434	500	523	633	607	744	744	839	941	1071
LBS	571	689	712	838	812	984	984	1079	1192	1322

33 089 00 14

K187..

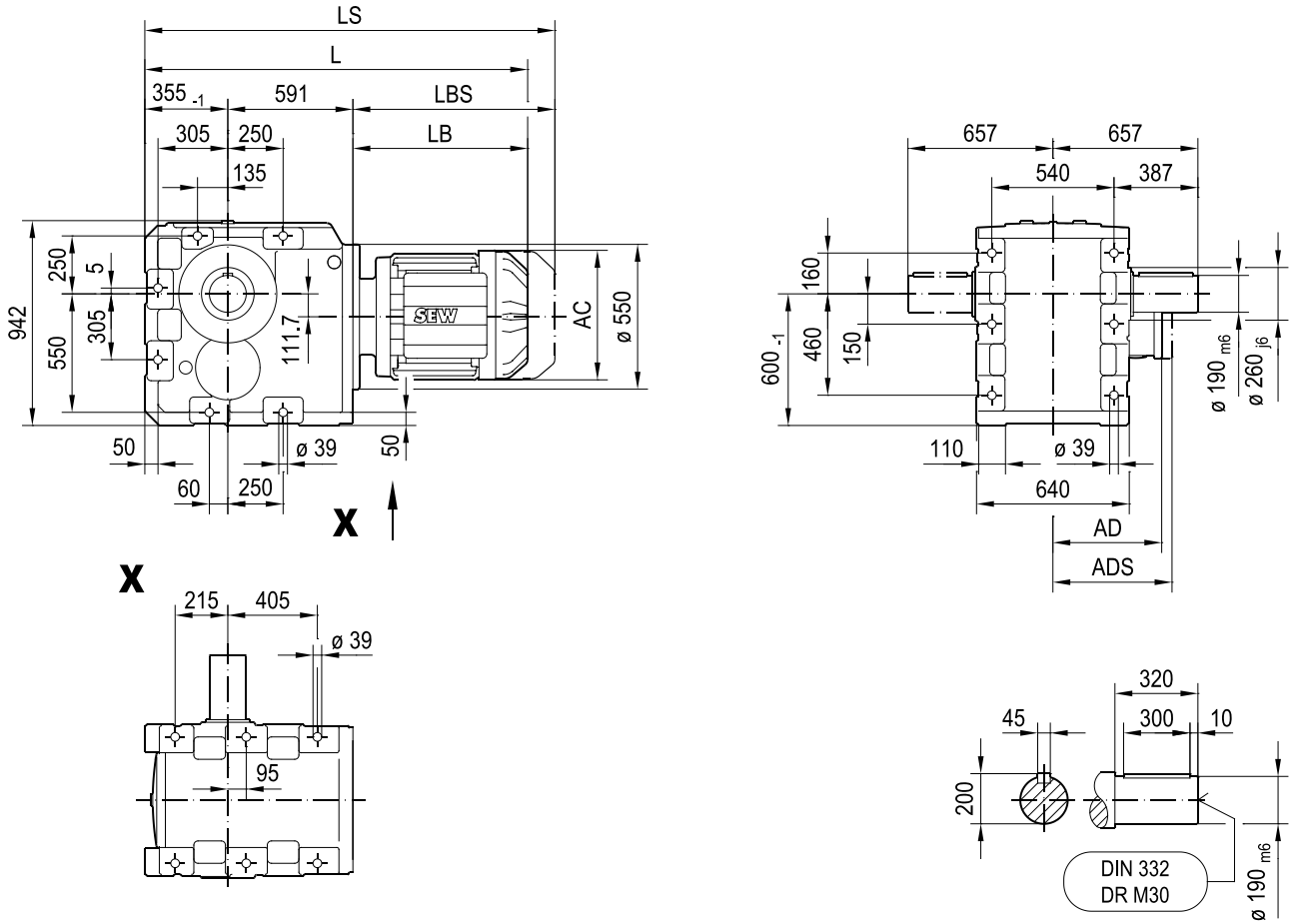

KH187B..

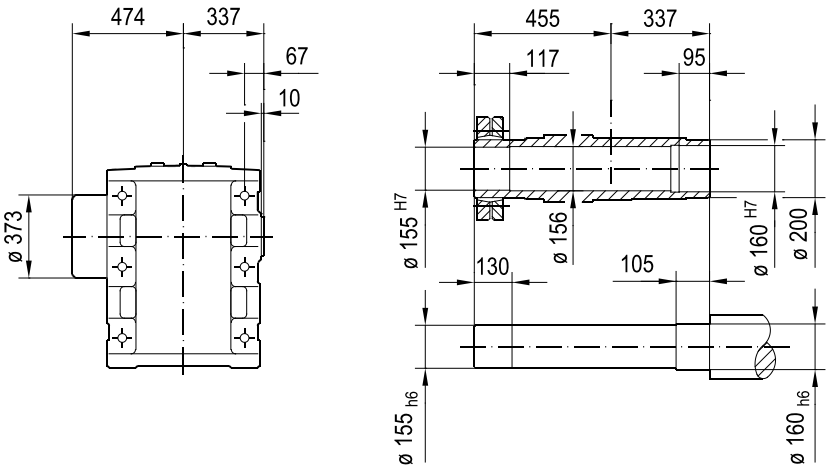

(→ 📖 4.1)	DRN								
	160..	180..	200L	225..	250M	280S	280M	315S-M	315ME-H
AC	314	357	394	434	495	495	495	624	624
AD	253	268	283	305	394	394	394	506	506
ADS	253	268	283	305	394	394	394	506	506
L	1446	1469	1579	1553	1690	1690	1785	1887	2017
LS	1635	1658	1784	1758	1930	1930	2025	2138	2268
LB	500	523	633	607	744	744	839	941	1071
LBS	689	712	838	812	984	984	1079	1192	1322

33 090 00 14

KH187..

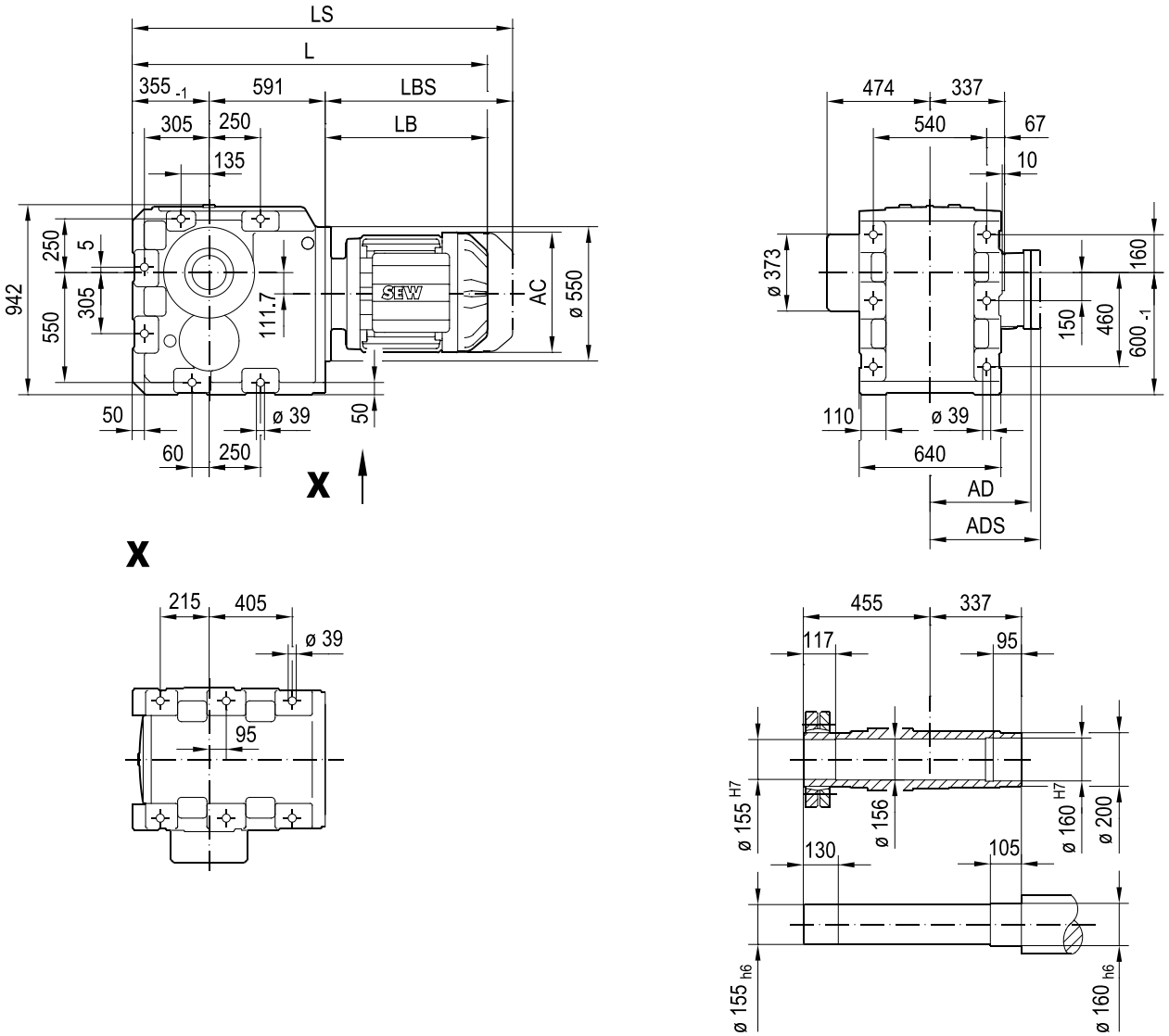

(→ 📖 4.1)	DRN								
	160..	180..	200L	225..	250M	280S	280M	315S-M	315ME-H
AC	314	357	394	434	495	495	495	624	624
AD	253	268	283	305	394	394	394	506	506
ADS	253	268	283	305	394	394	394	506	506
L	1446	1469	1579	1553	1690	1690	1785	1887	2017
LS	1635	1658	1784	1758	1930	1930	2025	2138	2268
LB	500	523	633	607	744	744	839	941	1071
LBS	689	712	838	812	984	984	1079	1192	1322

4.4.5 Dimension sheets K..R..DRN..

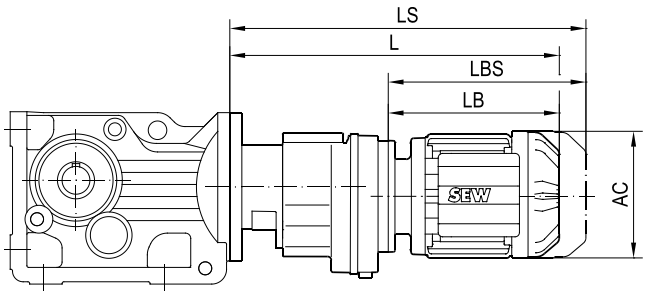

33 121 01 21

(→ 4.1)	AC	L	LS	LB	LBS
K..37R17 DRN63MS	115	323	379	190	246
K..37R17 DRN63M	115	337	393	204	260
K..37R17 DRN71MS	139	339	406	206	273
K..37R17 DRN71M	139	359	426	226	293
K..37R17 DRN80MK	156	370	451	237	318
K..39R17 DRN71MS	139	339	406	206	273
K..39R17 DRN71M	139	359	426	226	293
K..39R17 DRN80MK	156	370	451	237	318
K..39R17 DRN80M	156	416	497	283	364
K..47R37 DRN63MS	115	355	411	190	246
K..47R37 DRN63M	115	369	425	204	260
K..47R37 DRN71MS	139	371	438	206	273
K..47R37 DRN71M	139	391	458	226	293
K..47R37 DRN80MK	156	402	483	237	318
K..47R37 DRN80M	156	448	529	283	364
K..47R37 DRN90S	179	449	543	284	378
K..49R37 DRN71MS	139	363	430	206	273
K..49R37 DRN71M	139	383	450	226	293
K..49R37 DRN80MK	156	394	475	237	318
K..49R37 DRN80M	156	440	521	283	364
K..49R37 DRN90S	179	441	535	284	378
K..57R37 DRN63MS	115	355	411	190	246
K..57R37 DRN63M	115	369	425	204	260
K..57R37 DRN71MS	139	371	438	206	273
K..57R37 DRN71M	139	391	458	226	293
K..57R37 DRN80MK	156	402	483	237	318
K..57R37 DRN80M	156	448	529	283	364
K..57R37 DRN90S	179	449	543	284	378
K..57R37 DRN90L	179	481	575	316	410
K..67R37 DRN63M	115	369	425	204	260
K..67R37 DRN71MS	139	371	438	206	273
K..67R37 DRN71M	139	391	458	226	293
K..67R37 DRN80MK	156	402	483	237	318
K..67R37 DRN80M	156	448	529	283	364
K..67R37 DRN90S	179	449	543	284	378
K..67R37 DRN90L	179	481	575	316	410
K..77R37 DRN71MS	139	363	430	206	273
K..77R37 DRN71M	139	383	450	226	293
K..77R37 DRN80MK	156	394	475	237	318
K..77R37 DRN80M	156	440	521	283	364
K..77R37 DRN90S	179	441	535	284	378
K..77R37 DRN90L	179	473	567	316	410
K..77R37 DRN100LS	197	471	565	314	408
K..77R37 DRN100L/LM	197	521	615	364	458

	AC	L	LS	LB	LBS
K..87R57 DRN80MK	156	458	539	230	311
K..87R57 DRN80M	156	504	585	276	357
K..87R57 DRN90S	179	505	599	278	371
K..87R57 DRN90L	179	537	631	310	403
K..87R57 DRN100LS	197	533	626	305	399
K..87R57 DRN100L/LM	197	583	676	355	449
K..87R57 DRN112M	221	614	726	386	498
K..97R57 DRN90S	179	500	594	278	371
K..97R57 DRN90L	179	532	626	310	403
K..97R57 DRN100LS	197	528	621	305	399
K..97R57 DRN100L/LM	197	578	671	355	449
K..97R57 DRN112M	221	609	721	386	498
K..97R57 DRN132S	221	663	775	440	552
K..107R77 DRN100L/LM	197	595	689	348	442
K..107R77 DRN112M	221	626	738	379	491
K..107R77 DRN132S	221	676	788	429	541
K..107R77 DRN132M	261	694	832	447	585
K..107R77 DRN132L	261	720	857	473	610
K..107R77 DRN160..	314	786	975	539	728
K..127R77 DRN132S	221	661	773	429	541
K..127R77 DRN132M	261	679	817	447	585
K..127R87 DRN132S	221	704	816	424	536
K..127R87 DRN132M	261	722	860	442	580
K..127R87 DRN132L	261	748	885	468	605
K..127R87 DRN160..	314	814	1003	534	723
K..127R87 DRN180..	357	837	1026	557	746
K..157R97 DRN132L	261	788	925	463	600
K..157R97 DRN160..	314	854	1043	529	718
K..157R107 DRN132L	261	839	976	457	594
K..157R107 DRN160..	314	905	1094	523	712
K..157R107 DRN180..	357	928	1117	546	735
K..157R107 DRN200L	394	1038	1243	656	861
K..157R107 DRN225..	434	1012	1217	630	835
K..167R97 DRN160..	314	854	1043	529	718
K..167R97 DRN180..	357	877	1066	552	741
K..167R107 DRN160..	314	905	1094	523	712
K..167R107 DRN180..	357	928	1117	546	735
K..167R107 DRN200L	394	1038	1243	656	861
K..167R107 DRN225..	434	1012	1217	630	835
K..167R107 DRN250M	495	1149	1389	767	1007
K..187R97 DRN180..	357	877	1066	552	741
K..187R107 DRN180..	357	928	1117	546	735
K..187R107 DRN200L	394	1038	1243	656	861
K..187R107 DRN225..	434	1012	1217	630	835
K..187R107 DRN250M	495	1149	1389	767	1007

4.5 S..DRN.. helical-worm gearmotors

4.5.1 Geometrically possible combinations S..DRN..

S37, n_e = 1400 min^{-1}							92 Nm
n_a min^{-1}	M_{amax} Nm	F_{Ra} N	$\varphi_{(/R)}$	i	DRN 63M 63MS 71M 71MS 80MK 80MS	DRN 80M 90S	DRN 90L
					2		
8.8	92	3000	-	157.43	✓		
9.6	92	3000	-	144.40*	✓		
11	91	3000	-	122.94	✓	✓	
13	88	3000	-	106.00*	✓	✓	✓
14	87	3000	-	98.80*	✓	✓	✓
16	86	3000	-	86.36	✓	✓	✓
17	85	3000	-	80.96	✓	✓	✓
19	84	3000	-	71.44*	✓	✓	✓
22	82	3000	-	63.33	✓	✓	✓
25	81	3000	-	55.93	✓		
26	80	3000	-	53.83	✓	✓	✓
27	81	3000	-	51.30*	✓		
32	81	3000	-	43.68	✓	✓	
37	79	3000	-	37.66	✓	✓	✓
39	78	3000	-	35.10*	✓	✓	✓
45	76	2870	-	30.68	✓	✓	✓
48	75	2800	-	28.76	✓	✓	✓
55	74	2660	-	25.38*	✓	✓	✓
62	73	2530	-	22.50*	✓	✓	✓
70	52	2470	-	19.89	✓		
73	71	2380	-	19.13*	✓	✓	✓
76	52	2380	-	18.24*	✓		
90	50	2240	-	15.53	✓	✓	
104	49	2110	-	13.39	✓	✓	✓
112	48	2060	-	12.48*	✓	✓	✓
128	48	1940	-	10.91	✓	✓	✓
136	47	1900	-	10.23	✓	✓	✓
155	46	1810	-	9.02*	✓	✓	✓
175	45	1730	-	8.00*	✓	✓	✓
205	43	1630	-	6.80*	✓	✓	✓
221	35	1670	-	6.33	✓	✓	✓
260	34	1570	-	5.38	✓	✓	✓
288	33	1520	-	4.86*	✓	✓	✓
352	32	1400	-	3.97	✓	✓	✓

S37R17, n_e = 1400 min^{-1} — **92 Nm**

n_a min^{-1}	M_{amax} Nm	F_{Ra} N	$\varphi_{(/R)}$	i	DRN 63M 63MS 71M 71MS 80MK 80MS	DRN 80M
					2 3	
0.13	92	3000	-	10037	✓	✓
0.16	92	3000	-	8654	✓	✓
0.17	92	3000	-	8066	✓	✓
0.19	92	3000	-	7051	✓	✓
0.23	92	3000	-	6079	✓	✓
0.25	92	3000	-	5431	✓	✓
0.29	92	3000	-	4747	✓	✓
0.33	92	3000	-	4155	✓	✓
0.38	92	3000	-	3632	✓	✓
0.48	92	3000	-	2866	✓	✓
0.56	92	3000	-	2471	✓	✓
0.64	92	3000	-	2160	✓	✓
0.74	92	3000	-	1887	✓	✓
0.84	92	3000	-	1665	✓	✓
0.96	92	3000	-	1456	✓	✓
1.1	92	3000	-	1271	✓	✓
1.2	92	3000	-	1121	✓	✓
1.4	92	3000	-	994	✓	✓
1.6	92	3000	-	869	✓	✓
					2 2	
1.8	92	3000	-	774	✓	
2.1	92	3000	-	666	✓	
2.3	92	3000	-	596	✓	✓
2.6	92	3000	-	521	✓	✓
3	92	3000	-	456	✓	✓
3.5	92	3000	-	398	✓	✓
3.9	92	3000	-	351	✓	✓
4.6	92	3000	-	303	✓	✓
5.2	92	3000	-	265	✓	✓
6	92	3000	-	232	✓	✓
6.9	92	3000	-	202	✓	✓
7.8	92	3000	-	179	✓	✓
8.8	92	3000	-	158	✓	✓
9.7	92	3000	-	144	✓	✓
11	92	3000	-	118	✓	✓
12	92	3000	-	110	✓	✓

S37p, n_e = 1400 min^{-1} — **105 Nm**

n_a min^{-1}	M_{amax} Nm	F_{Ra} N	$\varphi_{(/R)}$	i	DRN 63M 63MS 71M 71MS 80MK 80MS	DRN 80M 90S	DRN 90L
					2		
8.8	94	3000	-	157.43	✓		
9.6	95	3000	-	144.40*	✓		

S37p, n_e = 1400 min^{-1} **105 Nm**

n_a min^{-1}	M_{amax} Nm	F_{Ra} N	$\varphi_{(/R)}$	i	DRN 63M 63MS 71M 71MS 80MK 80MS	DRN 80M 90S	DRN 90L
11	96	3000	-	122.94	✓	✓	
13	97	3000	-	106.00*	✓	✓	✓
14	97	3000	-	98.80*	✓	✓	✓
16	98	3000	-	86.36	✓	✓	✓
17	99	3000	-	80.96	✓	✓	✓
19	100	3000	-	71.44*	✓	✓	✓
22	98	3000	-	63.33	✓	✓	✓
25	104	3000	-	55.93	✓		
26	92	3000	-	53.83	✓	✓	✓
27	104	3000	-	51.30*	✓		
32	105	3000	-	43.68	✓	✓	
37	105	2800	-	37.66	✓	✓	✓
39	105	2700	-	35.10*	✓	✓	✓
45	105	2530	-	30.68	✓	✓	✓
48	105	2450	-	28.76	✓	✓	✓
55	100	2360	-	25.38*	✓	✓	✓
62	95	2280	-	22.50*	✓	✓	✓
70	78	2130	-	19.89	✓		
73	89	2170	-	19.13*	✓	✓	✓
76	78	2040	-	18.24*	✓		
90	76	1860	-	15.53	✓	✓	
104	75	1640	-	13.39	✓	✓	✓
112	74	1560	-	12.48*	✓	✓	✓
128	73	1390	-	10.91	✓	✓	✓
136	73	1280	-	10.23	✓	✓	✓
155	70	1210	-	9.02*	✓	✓	✓
175	66	1200	-	8.00*	✓	✓	✓
205	60	1210	-	6.80*	✓	✓	✓
221	56	1120	-	6.33	✓	✓	✓
260	51	1130	-	5.38	✓	✓	✓
288	48	1140	-	4.86*	✓	✓	✓
352	44	1070	-	3.97	✓	✓	✓

S37pR17, n_e = 1400 min^{-1} **105 Nm**

n_a min^{-1}	M_{amax} Nm	F_{Ra} N	$\varphi_{(/R)}$	i	DRN 63M 63MS 71M 71MS 80MK 80MS	DRN 80M
					 2 3	
0.13	99	3000	-	10037	✓	✓
0.16	100	3000	-	8654	✓	✓
0.17	99	3000	-	8066	✓	✓
0.19	99	3000	-	7051	✓	✓
0.23	101	3000	-	6079	✓	✓
0.25	99	3000	-	5431	✓	✓
0.29	99	3000	-	4747	✓	✓

S37pR17, n_e = 1400 min^{-1} **105 Nm**

n_a min^{-1}	M_{amax} Nm	F_{Ra} N	$\varphi_{(/R)}$	i	DRN 63M 63MS 71M 71MS 80MK 80MS	DRN 80M
0.33	102	3000	-	4155	✓	✓
0.38	102	3000	-	3632	✓	✓
0.48	105	3000	-	2866	✓	✓
0.56	105	3000	-	2471	✓	✓
0.64	105	3000	-	2160	✓	✓
0.74	105	3000	-	1887	✓	✓
0.84	105	3000	-	1665	✓	✓
0.96	105	3000	-	1456	✓	✓
1.1	105	3000	-	1271	✓	✓
1.2	105	3000	-	1121	✓	✓
1.4	105	3000	-	994	✓	✓
1.6	105	3000	-	869	✓	✓
					2 2	
1.8	105	3000	-	774	✓	
2.1	105	3000	-	666	✓	
2.3	105	3000	-	596	✓	✓
2.6	105	3000	-	521	✓	✓
3	105	3000	-	456	✓	✓
3.5	105	3000	-	398	✓	✓
3.9	105	3000	-	351	✓	✓
4.6	105	3000	-	303	✓	✓
5.2	105	3000	-	265	✓	✓
6	105	3000	-	232	✓	✓
6.9	105	3000	-	202	✓	✓
7.8	105	3000	-	179	✓	✓
8.8	105	3000	-	158	✓	✓
9.7	105	3000	-	144	✓	✓
11	105	3000	-	118	✓	✓
12	105	3000	-	110	✓	✓

S47, n_e = 1400 min^{-1} **170 Nm**

n_a min^{-1}	M_{amax} Nm	F_{Ra} N	$\varphi_{(/R)}$	i	DRN 63M 63MS 71M 71MS 80MK 80MS	DRN 80M 90S	DRN 90L	DRN 100L 100LM 100LS
					2			
6.9	170	5340	-	201.00*	✓			
7.5	170	5340	-	184.80*	✓			
8.8	170	5340	-	158.12	✓	✓		
10	168	5350	-	137.05	✓	✓	✓	
10	168	5350	-	128.10*	✓	✓	✓	
12	168	5350	-	110.73	✓	✓	✓	✓
14	168	5350	-	94.08*	✓	✓	✓	✓
16	167	5360	-	84.00*	✓	✓	✓	✓
19	167	5360	-	71.75*	✓	✓	✓	✓
20	155	5370	-	69.39	✓			

S47, n_e = 1400 min^{-1} — **170 Nm**

n_a min^{-1}	M_{amax} Nm	F_{Ra} N	$\varphi_{(/R)}$	i	DRN 63M 63MS 71M 71MS 80MK 80MS	DRN 80M 90S	DRN 90L	DRN 100L 100LM 100LS
20	167	5360	-	67.20*	✓	✓	✓	✓
21	155	5370	-	63.80*	✓			
24	165	5320	-	56.61		✓	✓	✓
25	155	5150	-	54.59	✓	✓		
29	155	4850	-	47.32	✓	✓	✓	
31	155	4710	-	44.22*	✓	✓	✓	
36	155	4430	-	38.23	✓	✓	✓	✓
43	155	4120	-	32.48*	✓	✓	✓	✓
48	155	3920	-	29.00*	✓	✓	✓	✓
56	155	3650	-	24.77	✓	✓	✓	✓
60	152	3570	-	23.20*	✓	✓	✓	✓
68	110	3370	-	20.33	✓	✓		
71	144	3370	-	19.54		✓	✓	✓
79	110	3160	-	17.62	✓	✓	✓	
85	110	3060	-	16.47*	✓	✓	✓	
98	110	2850	-	14.24	✓	✓	✓	✓
115	109	2650	-	12.10*	✓	✓	✓	✓
129	109	2500	-	10.80*	✓	✓	✓	✓
151	109	2310	-	9.23*	✓	✓	✓	✓
162	109	2230	-	8.64*	✓	✓	✓	✓
192	103	2110	-	7.28	✓	✓	✓	✓
204	78	2300	-	6.83	✓	✓	✓	✓
218	76	2260	-	6.40*	✓	✓	✓	✓
259	74	2110	-	5.39	✓	✓	✓	✓
294	72	2010	-	4.76	✓	✓	✓	✓
350	61	1980	-	4.00*	✓	✓	✓	✓

S47R17, n_e = 1400 min^{-1} — **185 Nm**

n_a min^{-1}	M_{amax} Nm	F_{Ra} N	$\varphi_{(/R)}$	i	DRN 63M 63MS 71M 71MS 80MK 80MS	DRN 80M
					 2 3	
0.1	185	5250	-	12909	✓	✓
0.12	185	5250	-	11189	✓	✓
0.13	185	5250	-	10374	✓	✓
0.15	185	5250	-	8992	✓	✓
0.17	185	5250	-	7860	✓	✓
0.2	185	5250	-	6887	✓	✓
0.23	185	5250	-	6055	✓	✓
0.3	185	5250	-	4637	✓	✓
0.34	185	5250	-	4092	✓	✓
0.39	185	5200	-	3582	✓	✓
0.44	185	5200	-	3131	✓	✓
0.51	185	5200	-	2714	✓	✓
0.58	185	5200	-	2412	✓	✓

S47R17, n_e = 1400 min^{-1} — **185 Nm**

n_a min^{-1}	M_{amax} Nm	F_{Ra} N	$\varphi_{(/R)}$	i	DRN 63M 63MS 71M 71MS 80MK 80MS	DRN 80M
0.65	185	5200	-	2131	✓	✓
0.75	185	5200	-	1863	✓	✓
0.84	185	5200	-	1663	✓	✓
0.97	185	5200	-	1435	✓	✓
1.1	185	5200	-	1254	✓	✓
1.2	185	5200	-	1120	✓	✓
1.2	185	5200	-	1083	✓	✓
1.4	183	5210	-	956	✓	✓
					2 2	
1.4	185	5200	-	965	✓	
1.6	185	5200	-	865	✓	✓
1.8	185	5200	-	750	✓	✓
2.1	185	5200	-	655	✓	✓
2.4	185	5200	-	574	✓	✓
2.7	185	5200	-	506	✓	✓
3.1	185	5200	-	438	✓	✓
3.6	185	5200	-	388	✓	✓
4.1	185	5200	-	336	✓	✓
4.7	185	5200	-	294	✓	✓
5.4	185	5260	-	257	✓	✓
6.1	185	5200	-	229	✓	✓
7	185	5200	-	200	✓	✓
7.4	185	5200	-	187	✓	✓
8.4	185	5200	-	165	✓	✓
9.4	185	5200	-	148	✓	✓
10	185	5200	-	131	✓	✓

S47p, n_e = 1400 min^{-1} — **200 Nm**

n_a min^{-1}	M_{amax} Nm	F_{Ra} N	$\varphi_{(/R)}$	i	DRN 63M 63MS 71M 71MS 80MK 80MS	DRN 80M 90S	DRN 90L	DRN 100L 100LM 100LS
					2			
6.9	192	5230	-	201.00*	✓			
7.5	193	5220	-	184.80*	✓			
8.8	194	5220	-	158.12	✓	✓		
10	195	5210	-	137.05	✓	✓	✓	
10	196	5210	-	128.10*	✓	✓	✓	
12	197	5200	-	110.73	✓	✓	✓	✓
14	198	5200	-	94.08*	✓	✓	✓	✓
16	199	5190	-	84.00*	✓	✓	✓	✓
19	194	5220	-	71.75*	✓	✓	✓	✓
20	200	5130	-	69.39	✓			
20	189	5250	-	67.20*	✓	✓	✓	✓
21	200	5130	-	63.80*	✓			
24	179	5220	-	56.61		✓	✓	✓

S47p, n_e = 1400 min^{-1} — **200 Nm**

n_a min^{-1}	M_{amax} Nm	F_{Ra} N	$\varphi_{(/R)}$	i	DRN 63M 63MS 71M 71MS 80MK 80MS	DRN 80M 90S	DRN 90L	DRN 100L 100LM 100LS
25	200	4790	-	54.59	✓	✓		
29	200	4490	-	47.32	✓	✓	✓	
31	200	4350	-	44.22*	✓	✓	✓	
36	196	4090	-	38.23	✓	✓	✓	✓
43	186	3880	-	32.48*	✓	✓	✓	✓
48	179	3730	-	29.00*	✓	✓	✓	✓
56	169	3550	-	24.77	✓	✓	✓	✓
60	165	3480	-	23.20*	✓	✓	✓	✓
68	160	2890	-	20.33	✓	✓		
71	156	3280	-	19.54		✓	✓	✓
79	156	2720	-	17.62	✓	✓	✓	
85	155	2630	-	16.47*	✓	✓	✓	
98	152	2350	-	14.24	✓	✓	✓	✓
115	146	2130	-	12.10*	✓	✓	✓	✓
129	142	1990	-	10.80*	✓	✓	✓	✓
151	134	1870	-	9.23*	✓	✓	✓	✓
162	131	1820	-	8.64*	✓	✓	✓	✓
192	109	2110	-	7.28	✓	✓	✓	✓
204	120	1490	-	6.83	✓	✓	✓	✓
218	118	1430	-	6.40*	✓	✓	✓	✓
259	104	1540	-	5.39	✓	✓	✓	✓
294	91	1740	-	4.76	✓	✓	✓	✓
350	75	1860	-	4.00*	✓	✓	✓	✓

S47pR17, n_e = 1400 min^{-1} — **200 Nm**

n_a min^{-1}	M_{amax} Nm	F_{Ra} N	$\varphi_{(/R)}$	i	DRN 63M 63MS 71M 71MS 80MK 80MS	DRN 80M
					2 3	
0.1	194	5200	-	12909	✓	✓
0.12	195	5200	-	11189	✓	✓
0.13	194	5200	-	10374	✓	✓
0.15	195	5200	-	8992	✓	✓
0.17	195	5200	-	7860	✓	✓
0.2	196	5190	-	6887	✓	✓
0.23	195	5200	-	6055	✓	✓
0.26	195	5200	-	5292	✓	✓
0.3	196	5190	-	4637	✓	✓
0.34	196	5190	-	4092	✓	✓
0.39	200	5070	-	3582	✓	✓
0.44	200	5070	-	3131	✓	✓
0.51	200	5070	-	2714	✓	✓
0.58	200	5070	-	2412	✓	✓
0.65	200	5070	-	2131	✓	✓
0.75	200	5070	-	1863	✓	✓

S47pR17, n_e = 1400 min^{-1} — **200 Nm**

n_a min^{-1}	M_{amax} Nm	F_{Ra} N	$\varphi_{(/R)}$	i	DRN 63M 63MS 71M 71MS 80MK 80MS	DRN 80M
0.84	200	5070	-	1663	✓	✓
0.97	200	5070	-	1435	✓	✓
1.1	200	5070	-	1254	✓	✓
1.2	200	5070	-	1120	✓	✓
1.2	200	5070	-	1083	✓	✓
1.4	200	5070	-	956	✓	✓
					 2 2	
1.4	200	5070	-	965	✓	
1.6	200	5070	-	865	✓	✓
1.8	200	5070	-	750	✓	✓
2.1	200	5070	-	655	✓	✓
2.4	200	5070	-	574	✓	✓
2.7	200	5070	-	506	✓	✓
3.1	200	5070	-	438	✓	✓
3.6	200	5070	-	388	✓	✓
4.1	200	5080	-	336	✓	✓
4.7	200	5090	-	294	✓	✓
5.4	200	5180	-	257	✓	✓
6.1	200	5100	-	229	✓	✓
7	200	5100	-	200	✓	✓
7.4	200	5100	-	187	✓	✓
8.4	200	5110	-	165	✓	✓
9.4	200	5110	-	148	✓	✓
10	200	5120	-	131	✓	✓

S57, n_e = 1400 min^{-1} — **295 Nm**

n_a min^{-1}	M_{amax} Nm	F_{Ra} N	$\varphi_{(/R)}$	i	DRN 63M 63MS 71M 71MS 80MK 80MS	DRN 80M 90S	DRN 90L	DRN 100L 100LM 100LS
					 2			
6.9	295	7130	-	201.00*	✓			
7.5	295	7130	-	184.80*	✓			
8.8	295	7130	-	158.12	✓	✓		
10	295	7130	-	137.05	✓	✓	✓	
10	295	7130	-	128.10*	✓	✓	✓	
12	295	7130	-	110.73	✓	✓	✓	✓
14	295	7130	-	94.08*	✓	✓	✓	✓
16	295	7130	-	84.00*	✓	✓	✓	✓
19	290	7170	-	71.75*	✓	✓	✓	✓
20	245	7520	-	69.39	✓			
20	285	7220	-	67.20*	✓	✓	✓	✓
21	245	7520	-	63.80*	✓			
24	265	7370	-	56.61		✓	✓	✓
25	245	7520	-	54.59	✓	✓		
29	245	7520	-	47.32	✓	✓	✓	

S57, n_e = 1400 min^{-1} — **295 Nm**

n_a min^{-1}	M_{amax} Nm	F_{Ra} N	$\varphi_{(/R)}$	i	DRN 63M 63MS 71M 71MS 80MK 80MS	DRN 80M 90S	DRN 90L	DRN 100L 100LM 100LS
31	245	7520	-	44.22*	✓	✓	✓	
36	245	7320	-	38.23	✓	✓	✓	✓
43	245	6840	-	32.48*	✓	✓	✓	✓
48	245	6520	-	29.00*	✓	✓	✓	✓
56	245	6100	-	24.77	✓	✓	✓	✓
60	245	5930	-	23.20*	✓	✓	✓	✓
68	168	5690	-	20.33	✓	✓		
71	215	5720	-	19.54		✓	✓	✓
79	168	5350	-	17.62	✓	✓	✓	
85	168	5200	-	16.47*	✓	✓	✓	
98	169	4860	-	14.24	✓	✓	✓	✓
115	169	4520	-	12.10*	✓	✓	✓	✓
129	169	4290	-	10.80*	✓	✓	✓	✓
151	169	3990	-	9.23*	✓	✓	✓	✓
162	166	3900	-	8.64*	✓	✓	✓	✓
192	146	3790	-	7.28	✓	✓	✓	✓
204	100	4100	-	6.83	✓	✓	✓	✓
218	98	4010	-	6.40*	✓	✓	✓	✓
259	95	3760	-	5.39	✓	✓	✓	✓
294	93	3590	-	4.76	✓	✓	✓	✓
350	88	3380	-	4.00*	✓	✓	✓	✓

S57R17, n_e = 1400 min^{-1} — **330 Nm**

n_a min^{-1}	M_{amax} Nm	F_{Ra} N	$\varphi_{(/R)}$	i	DRN 63M 63MS 71M 71MS 80MK 80MS	DRN 80M
					 2 3	
0.1	330	6800	-	12909	✓	✓
0.12	330	6800	-	11189	✓	✓
0.13	330	6800	-	10374	✓	✓
0.15	330	6800	-	8992	✓	✓
0.17	330	6800	-	7860	✓	✓
0.2	330	6800	-	6887	✓	✓
0.23	330	6800	-	6055	✓	✓
0.26	330	6800	-	5292	✓	✓
0.3	330	6800	-	4637	✓	✓
0.34	330	6800	-	4092	✓	✓
0.38	330	6800	-	3628	✓	✓
0.44	300	7090	-	3131	✓	✓
0.51	300	7090	-	2714	✓	✓
0.58	300	7090	-	2412	✓	✓
0.65	300	7090	-	2131	✓	✓
0.75	300	7090	-	1863	✓	✓
0.84	300	7090	-	1663	✓	✓
0.97	300	7090	-	1435	✓	✓

S57R17, n_e = 1400 min^{-1} — **330 Nm**

n_a min^{-1}	M_{amax} Nm	F_{Ra} N	$\varphi_{(/R)}$	i	DRN 63M 63MS 71M 71MS 80MK 80MS	DRN 80M
1.1	300	7090	-	1254	✓	✓
1.2	300	7090	-	1083	✓	✓
					 2 2	
1.4	300	7090	-	965	✓	
1.6	300	7090	-	865	✓	✓
1.8	300	7090	-	750	✓	✓
2.1	300	7090	-	655	✓	✓
2.4	300	7090	-	574	✓	✓
2.7	300	7090	-	506	✓	✓
3.1	300	7090	-	438	✓	✓
3.6	300	7090	-	388	✓	✓
4.1	300	7090	-	336	✓	✓
4.7	300	7090	-	294	✓	✓
5.2	300	7090	-	269	✓	✓
6.1	300	7090	-	229	✓	✓
6.8	300	7090	-	204	✓	✓
7.4	300	7090	-	187	✓	✓
8.4	300	7090	-	165	✓	✓
10	300	7090	-	131	✓	✓

S57p, n_e = 1400 min^{-1} — **370 Nm**

n_a min^{-1}	M_{amax} Nm	F_{Ra} N	$\varphi_{(/R)}$	i	DRN 63M 63MS 71M 71MS 80MK 80MS	DRN 80M 90S	DRN 90L	DRN 100L 100LM 100LS
					 2			
6.9	355	6530	-	201.00*	✓			
7.5	355	6530	-	184.80*	✓			
8.8	360	6470	-	158.12	✓	✓		
10	360	6470	-	137.05	✓	✓	✓	
10	365	6410	-	128.10*	✓	✓	✓	
12	365	6410	-	110.73	✓	✓	✓	✓
14	350	6580	-	94.08*	✓	✓	✓	✓
16	335	6750	-	84.00*	✓	✓	✓	✓
19	320	6900	-	71.75*	✓	✓	✓	✓
20	370	6350	-	69.39	✓			
20	310	6990	-	67.20*	✓	✓	✓	✓
21	370	6350	-	63.80*	✓			
24	295	7130	-	56.61		✓	✓	✓
25	360	6470	-	54.59	✓	✓		
29	345	6640	-	47.32	✓	✓	✓	
31	335	6750	-	44.22*	✓	✓	✓	
36	320	6820	-	38.23	✓	✓	✓	✓
43	300	6480	-	32.48*	✓	✓	✓	✓
48	290	6230	-	29.00*	✓	✓	✓	✓
56	275	5910	-	24.77	✓	✓	✓	✓

S57p, n_e = 1400 min^{-1} — **370 Nm**

n_a min^{-1}	M_{amax} Nm	F_{Ra} N	$\varphi_{(/R)}$	i	DRN 63M 63MS 71M 71MS 80MK 80MS	DRN 80M 90S	DRN 90L	DRN 100L 100LM 100LS
60	270	5780	-	23.20*	✓	✓	✓	✓
68	225	5260	-	20.33	✓	✓		
71	250	5500	-	19.54		✓	✓	✓
79	225	4920	-	17.62	✓	✓	✓	
85	225	4770	-	16.47*	✓	✓	✓	
98	225	4440	-	14.24	✓	✓	✓	✓
115	225	4090	-	12.10*	✓	✓	✓	✓
129	225	3870	-	10.80*	✓	✓	✓	✓
151	199	3800	-	9.23*	✓	✓	✓	✓
162	187	3800	-	8.64*	✓	✓	✓	✓
192	155	3790	-	7.28	✓	✓	✓	✓
204	162	3550	-	6.83	✓	✓	✓	✓
218	156	3490	-	6.40*	✓	✓	✓	✓
259	147	3300	-	5.39	✓	✓	✓	✓
294	129	3290	-	4.76	✓	✓	✓	✓
350	108	3240	-	4.00*	✓	✓	✓	✓

S57pR17, n_e = 1400 min^{-1} — **370 Nm**

n_a min^{-1}	M_{amax} Nm	F_{Ra} N	$\varphi_{(/R)}$	i	DRN 63M 63MS 71M 71MS 80MK 80MS	DRN 80M
					2 3	
0.1	360	6470	-	12909	✓	✓
0.12	365	6410	-	11189	✓	✓
0.13	360	6470	-	10374	✓	✓
0.15	365	6410	-	8992	✓	✓
0.17	365	6410	-	7860	✓	✓
0.2	365	6410	-	6887	✓	✓
0.23	365	6410	-	6055	✓	✓
0.26	365	6410	-	5292	✓	✓
0.3	365	6410	-	4637	✓	✓
0.34	365	6410	-	4092	✓	✓
0.38	365	6410	-	3628	✓	✓
0.44	370	6350	-	3131	✓	✓
0.51	370	6350	-	2714	✓	✓
0.58	370	6350	-	2412	✓	✓
0.65	370	6350	-	2131	✓	✓
0.75	370	6350	-	1863	✓	✓
0.84	370	6350	-	1663	✓	✓
0.97	370	6350	-	1435	✓	✓
1.1	370	6350	-	1254	✓	✓
1.2	370	6350	-	1083	✓	✓
					2 2	
1.4	370	6350	-	965	✓	
1.6	370	6350	-	865	✓	✓

S57pR17, n_e = 1400 min^{-1} — **370 Nm**

n_a min^{-1}	M_{amax} Nm	F_{Ra} N	$\varphi_{(/R)}$	i	DRN 63M 63MS 71M 71MS 80MK 80MS	DRN 80M
1.8	370	6350	-	750	✓	✓
2.1	370	6350	-	655	✓	✓
2.4	370	6350	-	574	✓	✓
2.7	370	6350	-	506	✓	✓
3.1	370	6350	-	438	✓	✓
3.6	370	6350	-	388	✓	✓
4.1	370	6350	-	336	✓	✓
4.7	370	6350	-	294	✓	✓
5.2	370	6350	-	269	✓	✓
6.1	370	6350	-	229	✓	✓
6.8	370	6350	-	204	✓	✓
7.4	370	6350	-	187	✓	✓
8.4	370	6350	-	165	✓	✓
10	370	6350	-	131	✓	✓

S67, n_e = 1400 min^{-1} — **520 Nm**

n_a min^{-1}	M_{amax} Nm	F_{Ra} N	$\varphi_{(/R)}$	i	DRN 63M 63MS 71M 71MS 80MK 80MS	DRN 80M 90S	DRN 90L	DRN 100L 100LM 100LS	DRN 112M	DRN 132M 132S
						2				
6.4	520	8680	-	217.41	✓	✓				
7.3	520	8680	-	190.11	✓	✓	✓			
7.7	520	8680	-	180.60*	✓	✓	✓			
8.8	520	8680	-	158.45	✓	✓	✓	✓		
10	520	8680	-	134.40*	✓	✓	✓	✓	✓	
11	520	8680	-	121.33	✓	✓	✓	✓	✓	
13	520	8680	-	106.75*	✓	✓	✓	✓	✓	✓
13	520	8680	-	100.80*	✓	✓	✓	✓	✓	✓
16	520	8680	-	85.83	✓	✓	✓	✓	✓	✓
17	520	8680	-	78.00*		✓	✓	✓	✓	✓
18	480	9020	-	75.06	✓	✓				
20	520	8680	-	67.57				✓	✓	✓
21	480	9020	-	65.63	✓	✓	✓			
22	480	9020	-	62.35*	✓	✓	✓			
23	500	8850	-	58.80*					✓	✓
25	480	8670	-	54.70	✓	✓	✓	✓		
30	480	8060	-	46.40*	✓	✓	✓	✓	✓	
33	480	7690	-	41.89	✓	✓	✓	✓	✓	
37	480	7250	-	36.85	✓	✓	✓	✓	✓	✓
40	480	7060	-	34.80*	✓	✓	✓	✓	✓	✓
47	480	6540	-	29.63	✓	✓	✓	✓	✓	✓
51	480	6240	-	26.93	✓	✓	✓	✓	✓	✓
57	340	6040	-	24.44	✓	✓	✓			
60	480	5810	-	23.33				✓	✓	✓
60	340	5890	-	23.22*	✓	✓	✓			

S67, n_e = 1400 min^{-1} — **520 Nm**

n_a min^{-1}	M_{amax} Nm	F_{Ra} N	$\varphi_{(/R)}$	i	DRN 63M 63MS 71M 71MS 80MK 80MS	DRN 80M 90S	DRN 90L	DRN 100L 100LM 100LS	DRN 112M	DRN 132M 132S
68	340	5520	-	20.37	✓	✓	✓	✓		
68	425	5760	-	20.30*					✓	✓
81	340	5080	-	17.28*	✓	✓	✓	✓	✓	
89	340	4820	-	15.60*	✓	✓	✓	✓	✓	
101	340	4510	-	13.73*	✓	✓	✓	✓	✓	✓
108	340	4310	-	12.96*	✓	✓	✓	✓	✓	✓
126	340	3660	-	11.03	✓	✓	✓	✓	✓	✓
139	340	3290	-	10.03	✓	✓	✓	✓	✓	✓
161	335	2860	-	8.69	✓	✓	✓	✓	✓	✓
185	295	3220	-	7.56*		✓	✓	✓	✓	✓

S67R37, n_e = 1400 min^{-1} — **570 Nm**

n_a min^{-1}	M_{amax} Nm	F_{Ra} N	$\varphi_{(/R)}$	i	DRN 63M 63MS 71M 71MS 80MK 80MS	DRN 80M 90S	DRN 90L	DRN 100L 100LM 100LS
					2 3			
0.06	570	8190	-	21362	✓			
0.07	570	8190	-	19594	✓			
0.07	570	8190	-	18120	✓			
0.08	570	8190	-	16682	✓	✓		
0.09	570	8190	-	14383	✓	✓	✓	
0.1	570	8190	-	12774	✓	✓		
0.12	570	8190	-	11013	✓	✓	✓	
0.14	570	8190	-	9694	✓	✓	✓	✓
0.16	570	8190	-	8529	✓	✓	✓	
0.18	570	8190	-	7455	✓	✓	✓	✓
0.21	570	8190	-	6531	✓	✓	✓	✓
0.24	570	8190	-	5759	✓	✓		
0.28	570	8190	-	4965	✓	✓	✓	
0.31	570	8190	-	4410	✓	✓		
0.36	570	8190	-	3880	✓	✓		
0.4	570	8190	-	3432	✓	✓	✓	✓
0.47	570	8190	-	2944	✓	✓	✓	
0.53	570	8190	-	2630	✓	✓	✓	
0.61	570	8190	-	2279	✓	✓	✓	
0.69	570	8190	-	2014	✓	✓	✓	
0.79	570	8190	-	1772	✓	✓	✓	
0.89	570	8190	-	1559	✓	✓	✓	
1	570	8190	-	1363	✓	✓	✓	✓
1.1	570	8190	-	1194	✓	✓	✓	✓
1.3	570	8190	-	1045	✓	✓	✓	
1.5	570	8190	-	914	✓	✓	✓	✓
					2 2			
1.7	570	8190	-	809	✓	✓	✓	
1.9	570	8190	-	712	✓	✓	✓	

S67R37, n_e = 1400 min^{-1} — **570 Nm**

n_a min^{-1}	M_{amax} Nm	F_{Ra} N	$\varphi_{(/R)}$	i	DRN 63M 63MS 71M 71MS 80MK 80MS	DRN 80M 90S	DRN 90L	DRN 100L 100LM 100LS
2.2	570	8190	-	615	✓	✓	✓	✓
2.5	570	8190	-	543	✓	✓	✓	✓
2.9	570	8190	-	469	✓	✓	✓	✓
3.3	570	8190	-	424	✓	✓	✓	✓
3.8	570	8190	-	365	✓	✓	✓	✓
4.3	570	8190	-	319	✓	✓	✓	✓
4.9	570	8190	-	281	✓	✓	✓	✓
5.6	570	8190	-	246	✓	✓	✓	✓
6.3	570	8190	-	221	✓	✓	✓	✓
7	570	8190	-	198	✓	✓	✓	✓
8.3	570	8190	-	168	✓	✓	✓	✓
8.9	570	8190	-	156	✓	✓	✓	✓

S67p, n_e = 1400 min^{-1} — **720 Nm**

n_a min^{-1}	M_{amax} Nm	F_{Ra} N	$\varphi_{(/R)}$	i	DRN 63M 63MS 71M 71MS 80MK 80MS	DRN 80M 90S	DRN 90L	DRN 100L 100LM 100LS	DRN 112M	DRN 132M 132S
						 2				
6.4	640	10100	-	217.41	✓	✓				
7.3	640	10100	-	190.11	✓	✓	✓			
7.7	645	10100	-	180.60*	✓	✓	✓			
8.8	645	10100	-	158.45	✓	✓	✓	✓		
10	645	10100	-	134.40*	✓	✓	✓	✓	✓	
11	645	10100	-	121.33	✓	✓	✓	✓	✓	
13	645	10100	-	106.75*	✓	✓	✓	✓	✓	✓
13	645	10100	-	100.80*	✓	✓	✓	✓	✓	✓
16	660	9700	-	85.83	✓	✓	✓	✓	✓	✓
17	660	9290	-	78.00*		✓	✓	✓	✓	✓
18	720	8340	-	75.06	✓	✓				
20	650	8740	-	67.57				✓	✓	✓
21	720	7790	-	65.63	✓	✓	✓			
22	720	7590	-	62.35*	✓	✓	✓			
23	625	8320	-	58.80*					✓	✓
25	705	7170	-	54.70	✓	✓	✓	✓		
30	680	6720	-	46.40*	✓	✓	✓	✓	✓	
33	670	6420	-	41.89	✓	✓	✓	✓	✓	
37	655	6070	-	36.85	✓	✓	✓	✓	✓	✓
40	640	5970	-	34.80*	✓	✓	✓	✓	✓	✓
47	620	5580	-	29.63	✓	✓	✓	✓	✓	✓
51	600	5410	-	26.93	✓	✓	✓	✓	✓	✓
57	415	5480	-	24.44	✓	✓	✓			
60	525	5440	-	23.33				✓	✓	✓
60	420	5300	-	23.22*	✓	✓	✓			
68	435	4700	-	20.37	✓	✓	✓	✓		
68	450	5490	-	20.30*					✓	✓

S67p, n_e = 1400 min^{-1} — **720 Nm**

n_a min^{-1}	M_{amax} Nm	F_{Ra} N	$\varphi_{(/R)}$	i	DRN 63M 63MS 71M 71MS 80MK 80MS	DRN 80M 90S	DRN 90L	DRN 100L 100LM 100LS	DRN 112M	DRN 132M 132S
81	415	4320	-	17.28*	✓	✓	✓	✓	✓	
89	410	3960	-	15.60*	✓	✓	✓	✓	✓	
101	395	3690	-	13.73*	✓	✓	✓	✓	✓	✓
108	390	3550	-	12.96*	✓	✓	✓	✓	✓	✓
126	375	3190	-	11.03	✓	✓	✓	✓	✓	✓
139	365	3020	-	10.03	✓	✓	✓	✓	✓	✓
161	350	2780	-	8.69	✓	✓	✓	✓	✓	✓
185	330	2680	-	7.56*		✓	✓	✓	✓	✓

S67pR37, n_e = 1400 min^{-1} — **720 Nm**

n_a min^{-1}	M_{amax} Nm	F_{Ra} N	$\varphi_{(/R)}$	i	DRN 63M 63MS 71M 71MS 80MK 80MS	DRN 80M 90S	DRN 90L	DRN 100L 100LM 100LS
					2 3			
0.06	645	10000	-	21362	✓			
0.07	645	10000	-	19594	✓			
0.07	645	10000	-	18120	✓			
0.08	645	10000	-	16682	✓	✓		
0.09	645	10000	-	14383	✓	✓	✓	
0.1	645	10000	-	12774	✓	✓		
0.12	645	10000	-	11013	✓	✓	✓	
0.14	645	10000	-	9694	✓	✓	✓	✓
0.16	645	10000	-	8529	✓	✓	✓	
0.18	645	10000	-	7455	✓	✓	✓	✓
0.21	645	10000	-	6531	✓	✓	✓	✓
0.24	720	9100	-	5759	✓	✓		
0.28	720	9100	-	4965	✓	✓	✓	
0.31	720	9100	-	4410	✓	✓		
0.36	720	9100	-	3880	✓	✓		
0.4	720	9100	-	3432	✓	✓	✓	✓
0.47	700	9220	-	2944	✓	✓	✓	
0.53	720	9100	-	2630	✓	✓	✓	
0.61	660	9460	-	2279	✓	✓	✓	
0.69	720	9100	-	2014	✓	✓	✓	
0.79	720	9100	-	1772	✓	✓	✓	
0.89	700	9220	-	1559	✓	✓	✓	
1	700	9220	-	1363	✓	✓	✓	✓
1.1	720	9100	-	1194	✓	✓	✓	✓
1.3	640	9590	-	1045	✓	✓	✓	
1.5	640	9590	-	914	✓	✓	✓	✓
					2 2			
1.7	720	9100	-	809	✓	✓	✓	
1.9	720	9100	-	712	✓	✓	✓	
2.2	720	9100	-	615	✓	✓	✓	✓
2.5	700	9230	-	543	✓	✓	✓	✓

S67pR37, n_e = 1400 min^{-1} — **720 Nm**

n_a min^{-1}	M_{amax} Nm	F_{Ra} N	$\varphi_{(/R)}$	i	DRN 63M 63MS 71M 71MS 80MK 80MS	DRN 80M 90S	DRN 90L	DRN 100L 100LM 100LS
2.9	720	9130	-	469	✓	✓	✓	✓
3.3	720	9140	-	424	✓	✓	✓	✓
3.8	720	9150	-	365	✓	✓	✓	✓
4.3	660	9530	-	319	✓	✓	✓	✓
4.9	680	9420	-	281	✓	✓	✓	✓
5.6	720	9190	-	246	✓	✓	✓	✓
6.3	640	9670	-	221	✓	✓	✓	✓
7	680	9440	-	198	✓	✓	✓	✓
8.3	680	9450	-	168	✓	✓	✓	✓
8.9	640	9690	-	156	✓	✓	✓	✓

S77, n_e = 1400 min^{-1} — **1270 Nm**

n_a min^{-1}	M_{amax} Nm	F_{Ra} N	$\varphi_{(/R)}$	i	DRN 63M 63MS 71M 71MS 80MK 80MS	DRN 80M 90S	DRN 90L	DRN 100L 100LM 100LS	DRN 112M	DRN 132M 132S	DRN 132L 160L 160M
					 2						
5.4	1270	11700	-	256.47	✓	✓					
6.2	1270	11700	-	225.26	✓	✓	✓				
6.5	1270	11700	-	214.00*	✓	✓	✓				
7.4	1270	11700	-	189.09	✓	✓	✓	✓			
8.6	1260	11800	-	161.60*	✓	✓	✓	✓	✓		
9.4	1240	12000	-	148.15	✓	✓	✓	✓	✓		
10	1210	12200	-	130.00*	✓	✓	✓	✓	✓	✓	
11	1200	12300	-	123.20*	✓	✓	✓	✓	✓	✓	
12	1170	12600	-	107.83	✓	✓	✓	✓	✓	✓	
14	1140	12800	-	97.14	✓	✓	✓	✓	✓	✓	✓
16	1100	13100	-	85.22	✓	✓	✓	✓	✓	✓	✓
18	1070	12800	-	75.20*				✓	✓	✓	✓
18	1100	11900	-	75.09	✓	✓	✓				
19	1100	11600	-	71.33	✓	✓	✓				
20	1040	12300	-	66.67		✓	✓	✓	✓	✓	✓
22	1100	10900	-	63.03	✓	✓	✓	✓			
24	990	11600	-	56.92		✓	✓	✓	✓	✓	✓
25	1100	10100	-	53.87	✓	✓	✓	✓	✓		
28	1100	9650	-	49.38	✓	✓	✓	✓	✓		
32	1100	9010	-	43.33	✓	✓	✓	✓	✓	✓	
34	1100	8750	-	41.07	✓	✓	✓	✓	✓	✓	
38	1100	8140	-	35.94	✓	✓	✓	✓	✓	✓	
43	1090	7730	-	32.38	✓	✓	✓	✓	✓	✓	✓
49	1050	7370	-	28.41	✓	✓	✓	✓	✓	✓	✓
55	1020	7010	-	25.07		✓	✓	✓	✓	✓	✓
61	705	5960	-	22.89	✓	✓	✓	✓	✓		
63	980	6740	-	22.22						✓	✓
66	705	5390	-	20.99	✓	✓	✓	✓	✓		
73	930	6390	-	18.97						✓	✓

S77, n_e = 1400 min^{-1} — **1270 Nm**

n_a min^{-1}	M_{amax} Nm	F_{Ra} N	$\varphi_{(/R)}$	i	DRN 63M 63MS 71M 71MS 80MK 80MS	DRN 80M 90S	DRN 90L	DRN 100L 100LM 100LS	DRN 112M	DRN 132M 132S	DRN 132L 160L 160M
76	705	4550	-	18.42	✓	✓	✓	✓	✓	✓	
80	710	4120	-	17.45	✓	✓	✓	✓	✓	✓	
91	710	3320	-	15.28	✓	✓	✓	✓	✓	✓	
101	710	2710	-	13.76	✓	✓	✓	✓	✓	✓	✓
115	720	1800	-	12.07	✓	✓	✓	✓	✓	✓	✓
131	720	1130	-	10.65		✓	✓	✓	✓	✓	✓
148	725	415	-	9.44		✓	✓	✓	✓	✓	✓
173	680	440	-	8.06		✓	✓	✓	✓	✓	✓

S77R37, n_e = 1400 min^{-1} — **1270 Nm**

n_a min^{-1}	M_{amax} Nm	F_{Ra} N	$\varphi_{(/R)}$	i	DRN 63M 63MS 71M 71MS 80MK 80MS	DRN 80M 90S	DRN 90L	DRN 100L 100LM 100LS
					2 3			
0.05	1270	11700	-	25493	✓			
0.06	1270	11700	-	21787	✓			
0.07	1270	11700	-	19907	✓	✓		
0.08	1270	11700	-	17013	✓	✓		
0.09	1270	11700	-	14668	✓	✓	✓	
0.1	1270	11700	-	13110	✓	✓	✓	
0.12	1270	11700	-	11569	✓	✓	✓	✓
0.14	1270	11700	-	9887	✓	✓	✓	✓
0.15	1270	11700	-	8817	✓	✓	✓	
0.18	1270	11700	-	7735	✓	✓	✓	
0.2	1270	11700	-	6735	✓	✓	✓	
0.23	1270	11700	-	5943	✓	✓	✓	✓
0.26	1270	11700	-	5214	✓	✓	✓	
0.3	1270	11700	-	4618	✓	✓	✓	✓
0.35	1270	11700	-	3992	✓	✓	✓	✓
0.39	1270	11700	-	3540	✓	✓	✓	✓
0.45	1270	11700	-	3098	✓	✓	✓	✓
0.5	1240	12000	-	2753	✓	✓		
0.58	1240	12000	-	2374	✓	✓	✓	
0.67	1240	12000	-	2083	✓	✓	✓	
0.77	1240	12000	-	1813	✓	✓	✓	
0.8	1240	12000	-	1745	✓	✓	✓	✓
0.87	1240	12000	-	1600	✓	✓	✓	✓
0.99	1240	12000	-	1404	✓	✓	✓	✓
1.1	1240	12000	-	1245	✓	✓	✓	✓
					2 2			
1.2	1240	12000	-	1100	✓	✓		
1.4	1240	12000	-	954	✓	✓	✓	
1.6	1240	12000	-	837	✓	✓	✓	
1.9	1240	12000	-	714	✓	✓	✓	✓
2.1	1240	12000	-	637	✓	✓	✓	✓

S77R37, n_e = 1400 min^{-1} — **1270 Nm**

n_a min^{-1}	M_{amax} Nm	F_{Ra} N	$\varphi_{(/R)}$	i	DRN 63M 63MS 71M 71MS 80MK 80MS	DRN 80M 90S	DRN 90L	DRN 100L 100LM 100LS
2.4	1240	12000	-	574	✓	✓	✓	✓
2.8	1240	12000	-	499	✓	✓	✓	✓
3.1	1240	12000	-	438	✓	✓	✓	✓
3.5	1240	12000	-	389	✓	✓	✓	✓
4.2	1240	12000	-	327	✓	✓	✓	✓
4.8	1240	12000	-	289	✓	✓	✓	✓
5.6	1240	12000	-	250	✓	✓	✓	✓
6.3	1240	12000	-	219	✓	✓	✓	✓

S77p, n_e = 1400 min^{-1} — **1500 Nm**

n_a min^{-1}	M_{amax} Nm	F_{Ra} N	$\varphi_{(/R)}$	i	DRN 63M 63MS 71M 71MS 80MK 80MS	DRN 80M 90S	DRN 90L	DRN 100L 100LM 100LS	DRN 112M	DRN 132M 132S	DRN 132L 160L 160M
					 2						
5.4	1500	12400	-	256.47	✓	✓					
6.2	1500	12400	-	225.26	✓	✓	✓				
6.5	1500	12400	-	214.00*	✓	✓	✓				
7.4	1500	12400	-	189.09	✓	✓	✓	✓			
8.6	1500	12400	-	161.60*	✓	✓	✓	✓	✓		
9.4	1500	12400	-	148.15	✓	✓	✓	✓	✓		
10	1500	12400	-	130.00*	✓	✓	✓	✓	✓	✓	
11	1500	12400	-	123.20*	✓	✓	✓	✓	✓	✓	
12	1470	12500	-	107.83	✓	✓	✓	✓	✓	✓	
14	1440	12600	-	97.14	✓	✓	✓	✓	✓	✓	✓
16	1390	12000	-	85.22	✓	✓	✓	✓	✓	✓	✓
18	1340	11500	-	75.20*				✓	✓	✓	✓
18	1360	10500	-	75.09	✓	✓	✓				
19	1350	10300	-	71.33	✓	✓	✓				
20	1290	11000	-	66.67		✓	✓	✓	✓	✓	✓
22	1320	9770	-	63.03	✓	✓	✓	✓			
24	1230	10400	-	56.92		✓	✓	✓	✓	✓	✓
25	1300	9050	-	53.87	✓	✓	✓	✓	✓		
28	1280	8710	-	49.38	✓	✓	✓	✓	✓		
32	1250	8230	-	43.33	✓	✓	✓	✓	✓	✓	
34	1240	8020	-	41.07	✓	✓	✓	✓	✓	✓	
38	1210	7560	-	35.94	✓	✓	✓	✓	✓	✓	
43	1180	7250	-	32.38	✓	✓	✓	✓	✓	✓	✓
49	1140	6890	-	28.41	✓	✓	✓	✓	✓	✓	✓
55	1100	6580	-	25.07		✓	✓	✓	✓	✓	✓
61	840	4260	-	22.89	✓	✓	✓	✓	✓		
63	1070	6260	-	22.22						✓	✓
66	820	4010	-	20.99	✓	✓	✓	✓	✓		
73	1010	5960	-	18.97						✓	✓
76	800	3490	-	18.42	✓	✓	✓	✓	✓	✓	
80	795	3240	-	17.45	✓	✓	✓	✓	✓	✓	

S77p, n_e = 1400 min^{-1}

n_a min^{-1}	M_{amax} Nm	F_{Ra} N	$\varphi_{(/R)}$	i	DRN 63M 63MS 71M 71MS 80MK 80MS	DRN 80M 90S	DRN 90L	DRN 100L 100LM 100LS	DRN 112M	DRN 132M 132S	1500 Nm DRN 132L 160L 160M
91	765	2930	-	15.28	✓	✓	✓	✓	✓	✓	
101	745	2650	-	13.76	✓	✓	✓	✓	✓	✓	✓
115	720	2330	-	12.07	✓	✓	✓	✓	✓	✓	✓
131	720	1650	-	10.65		✓	✓	✓	✓	✓	✓
148	725	940	-	9.44		✓	✓	✓	✓	✓	✓
173	680	920	-	8.06		✓	✓	✓	✓	✓	✓

S77pR37, n_e = 1400 min^{-1}

n_a min^{-1}	M_{amax} Nm	F_{Ra} N	$\varphi_{(/R)}$	i	DRN 63M 63MS 71M 71MS 80MK 80MS	DRN 80M 90S	DRN 90L	1500 Nm DRN 100L 100LM 100LS
					2 3			
0.05	1500	12200	-	25493	✓			
0.06	1500	12200	-	21787	✓			
0.07	1500	12200	-	19907	✓	✓		
0.08	1500	12200	-	17013	✓	✓		
0.09	1500	12200	-	14668	✓	✓	✓	
0.1	1500	12200	-	13110	✓	✓	✓	
0.12	1500	12200	-	11569	✓	✓	✓	✓
0.14	1500	12200	-	9887	✓	✓	✓	✓
0.15	1500	12200	-	8817	✓	✓	✓	
0.18	1500	12200	-	7735	✓	✓	✓	
0.2	1500	12200	-	6735	✓	✓	✓	
0.23	1500	12200	-	5943	✓	✓	✓	✓
0.26	1500	12200	-	5214	✓	✓	✓	
0.3	1500	12200	-	4618	✓	✓	✓	✓
0.35	1500	12200	-	3992	✓	✓	✓	✓
0.39	1500	12200	-	3540	✓	✓	✓	✓
0.45	1500	12200	-	3098	✓	✓	✓	✓
0.5	1440	11500	-	2753	✓	✓		
0.58	1440	11500	-	2374	✓	✓	✓	
0.67	1440	11500	-	2083	✓	✓	✓	
0.77	1440	11500	-	1813	✓	✓	✓	
0.8	1450	11500	-	1745	✓	✓	✓	✓
0.87	1440	11500	-	1600	✓	✓	✓	✓
0.99	1440	11500	-	1404	✓	✓	✓	✓
1.1	1440	11500	-	1245	✓	✓	✓	✓
					2 2			
1.2	1440	11500	-	1100	✓	✓		
1.4	1440	11500	-	954	✓	✓	✓	
1.6	1440	11500	-	837	✓	✓	✓	
1.9	1450	11500	-	714	✓	✓	✓	✓
2.1	1450	11500	-	637	✓	✓	✓	✓
2.4	1440	11500	-	574	✓	✓	✓	✓
2.8	1440	11600	-	499	✓	✓	✓	✓

S77pR37, n_e = 1400 min^{-1} — **1500 Nm**

n_a min^{-1}	M_{amax} Nm	F_{Ra} N	$\varphi_{(/R)}$	i	DRN 63M 63MS 71M 71MS 80MK 80MS	DRN 80M 90S	DRN 90L	DRN 100L 100LM 100LS
3.1	1440	11600	-	438	✓	✓	✓	✓
3.5	1400	11800	-	389	✓	✓	✓	✓
4.2	1400	11800	-	327	✓	✓	✓	✓
4.8	1440	11700	-	289	✓	✓	✓	✓
5.6	1440	11700	-	250	✓	✓	✓	✓
6.3	1440	11700	-	219	✓	✓	✓	✓

S87, n_e = 1400 min^{-1} — **2280 Nm**

n_a min^{-1}	M_{amax} Nm	F_{Ra} N	$\varphi_{(/R)}$	i	DRN 71M 80MK 80MS	DRN 80M 90S	DRN 90L	DRN 100L 100LM 100LS	DRN 112M	DRN 132M 132S	DRN 132L 160L 160M	DRN 180L 180M
							2					
4.8	2280	27900	-	288.00*	✓	✓	✓					
5.4	2280	27900	-	258.18	✓	✓	✓	✓				
6.2	2280	27900	-	222.40*	✓	✓	✓	✓	✓			
6.8	2260	28000	-	202.96	✓	✓	✓	✓	✓			
7.7	2210	28100	-	180.00*	✓	✓	✓	✓	✓	✓		
9.2	2150	28200	-	151.30	✓	✓	✓	✓	✓	✓		
10	2100	28300	-	139.05	✓	✓	✓	✓	✓	✓	✓	
11	2060	28300	-	123.48	✓	✓	✓	✓	✓	✓	✓	
12	2000	28400	-	110.40*		✓	✓	✓	✓	✓	✓	✓
14	1960	28500	-	99.26		✓	✓	✓	✓	✓	✓	✓
15	1510	29100	-	91.20*	✓	✓	✓					
16	1880	28600	-	86.15		✓	✓	✓	✓	✓	✓	✓
17	1600	29000	-	81.76	✓	✓	✓	✓				
18	1820	28700	-	77.14				✓	✓	✓	✓	✓
19	1600	29000	-	70.43	✓	✓	✓	✓	✓			
21	1600	29000	-	64.27	✓	✓	✓	✓	✓			
21	1700	28900	-	64.00*						✓	✓	✓
24	1600	29000	-	57.00*	✓	✓	✓	✓	✓	✓		
29	1600	29000	-	47.91	✓	✓	✓	✓	✓	✓		
31	1600	29000	-	44.03	✓	✓	✓	✓	✓	✓	✓	
35	1600	28200	-	39.10	✓	✓	✓	✓	✓	✓	✓	
40	1600	27100	-	34.96*		✓	✓	✓	✓	✓	✓	✓
44	1600	26000	-	31.43		✓	✓	✓	✓	✓	✓	✓
51	1600	24700	-	27.28		✓	✓	✓	✓	✓	✓	✓
54	1240	23400	-	25.50*	✓	✓	✓	✓	✓	✓		
57	1600	23700	-	24.43							✓	✓
65	1240	21800	-	21.43	✓	✓	✓	✓	✓	✓		
69	1600	22100	-	20.27							✓	✓
71	1240	21100	-	19.70	✓	✓	✓	✓	✓	✓	✓	
80	1240	20200	-	17.49	✓	✓	✓	✓	✓	✓	✓	
89	1240	19300	-	15.64*		✓	✓	✓	✓	✓	✓	✓
99	1240	18500	-	14.06		✓	✓	✓	✓	✓	✓	✓
114	1240	17400	-	12.21		✓	✓	✓	✓	✓	✓	✓
128	1240	16400	-	10.93				✓	✓	✓	✓	✓
154	1140	15900	-	9.07				✓	✓	✓	✓	✓
177	1010	15700	-	7.88						✓	✓	✓

S87R57, n_e = 1400 min^{-1} **2500 Nm**

n_a min^{-1}	M_{amax} Nm	F_{Ra} N	$\varphi_{(/R)}$	i	DRN 63M 63MS 71M 71MS 80MK 80MS	DRN 80M 90S	DRN 90L	DRN 100L 100LM 100LS	DRN 112M	DRN 132M 132S
					 2 3					
0.05	2500	27500	-	25987	✓					
0.05	2500	27500	-	23940	✓					
0.06	2500	27500	-	20568	✓	✓				
0.07	2500	27500	-	18265	✓	✓				
0.08	2500	27500	-	16774	✓	✓	✓			
0.09	2500	27500	-	14820	✓	✓	✓	✓		
0.1	2500	27500	-	13160	✓	✓	✓	✓		
0.12	2500	27500	-	11200	✓	✓	✓	✓	✓	
0.14	2500	27500	-	9904	✓	✓	✓	✓	✓	
0.16	2500	27500	-	8549	✓	✓	✓			
0.18	2500	27500	-	7643	✓	✓	✓			
0.2	2500	27500	-	6706	✓	✓	✓	✓	✓	
0.23	2500	27500	-	5875	✓	✓	✓			
0.26	2500	27500	-	5187	✓	✓	✓	✓	✓	✓
0.3	2500	27500	-	4606	✓	✓	✓	✓	✓	✓
0.36	2500	27500	-	3872	✓	✓	✓	✓	✓	✓
						 2 2				
0.4	2500	27500	-	3475	✓	✓	✓			
0.48	2500	27500	-	2905	✓	✓	✓			
0.54	2500	27500	-	2586	✓	✓	✓	✓	✓	
0.59	2500	27500	-	2335	✓	✓	✓	✓	✓	
0.68	2500	27500	-	2054	✓	✓	✓	✓	✓	✓
0.76	2500	27500	-	1824	✓	✓	✓	✓	✓	✓
0.85	2500	27500	-	1631	✓	✓	✓	✓	✓	✓
1	2500	27500	-	1332	✓	✓	✓	✓	✓	✓
1.1	2500	27500	-	1191	✓	✓	✓	✓	✓	✓
1.3	2500	27500	-	1032	✓	✓	✓	✓	✓	✓
1.5	2500	27500	-	930	✓	✓	✓	✓	✓	✓
1.6	2500	27500	-	831	✓	✓	✓	✓	✓	✓
1.9	2500	27500	-	719	✓	✓	✓	✓	✓	✓
2.2	2500	27500	-	624	✓	✓	✓	✓	✓	✓
2.5	2500	27500	-	558	✓	✓	✓	✓	✓	✓
2.8	2500	27500	-	485		✓	✓	✓	✓	✓
3.2	2450	27600	-	435	✓	✓	✓	✓	✓	✓
3.7	2450	27600	-	378		✓	✓	✓	✓	✓
4.3	2400	27700	-	323	✓	✓	✓	✓	✓	✓
4.9	2400	27700	-	281		✓	✓	✓	✓	✓
5.4	1980	28400	-	255	✓	✓	✓	✓	✓	✓
6.3	1980	28400	-	222	✓	✓	✓	✓	✓	✓
6.8	1980	28400	-	205	✓	✓	✓	✓	✓	✓

S87p, n_e = 1400 min^{-1} — **3000 Nm**

n_a min^{-1}	M_{amax} Nm	F_{Ra} N	$\varphi_{(/R)}$	i	DRN 71M 80MK 80MS	DRN 80M 90S	DRN 90L	DRN 100L 100LM 100LS	DRN 112M	DRN 132M 132S	DRN 132L 160L 160M	DRN 180L 180M
						2						
4.8	3000	19800	-	288.00*	✓	✓	✓					
5.4	2920	22600	-	258.18	✓	✓	✓	✓				
6.2	2860	24400	-	222.40*	✓	✓	✓	✓	✓			
6.8	2820	25500	-	202.96	✓	✓	✓	✓	✓			
7.7	2780	26200	-	180.00*	✓	✓	✓	✓	✓	✓		
9.2	2680	27100	-	151.30	✓	✓	✓	✓	✓	✓		
10	2670	27100	-	139.05	✓	✓	✓	✓	✓	✓	✓	
11	2580	27300	-	123.48	✓	✓	✓	✓	✓	✓	✓	
12	2510	27500	-	110.40*		✓	✓	✓	✓	✓	✓	✓
14	2440	27600	-	99.26		✓	✓	✓	✓	✓	✓	✓
15	2490	27500	-	91.20*	✓	✓	✓					
16	2360	27800	-	86.15		✓	✓	✓	✓	✓	✓	✓
17	2460	27500	-	81.76	✓	✓	✓	✓				
18	2280	27900	-	77.14				✓	✓	✓	✓	✓
19	2400	27700	-	70.43	✓	✓	✓	✓	✓			
21	2380	27700	-	64.27	✓	✓	✓	✓	✓			
21	2160	28200	-	64.00*						✓	✓	✓
24	2330	27800	-	57.00*	✓	✓	✓	✓	✓	✓		
29	2260	28000	-	47.91	✓	✓	✓	✓	✓	✓		
31	2210	27300	-	44.03	✓	✓	✓	✓	✓	✓	✓	
35	2160	26200	-	39.10	✓	✓	✓	✓	✓	✓	✓	
40	2090	25400	-	34.96*		✓	✓	✓	✓	✓	✓	✓
44	2040	24500	-	31.43		✓	✓	✓	✓	✓	✓	✓
51	1970	23400	-	27.28		✓	✓	✓	✓	✓	✓	✓
54	1440	22800	-	25.50*	✓	✓	✓	✓	✓	✓		
57	1890	22700	-	24.43							✓	✓
65	1420	21400	-	21.43	✓	✓	✓	✓	✓	✓		
69	1760	21600	-	20.27							✓	✓
71	1370	20900	-	19.70	✓	✓	✓	✓	✓	✓	✓	
80	1310	20200	-	17.49	✓	✓	✓	✓	✓	✓	✓	
89	1260	19600	-	15.64*		✓	✓	✓	✓	✓	✓	✓
99	1240	18900	-	14.06		✓	✓	✓	✓	✓	✓	✓
114	1240	17800	-	12.21		✓	✓	✓	✓	✓	✓	✓
128	1240	16800	-	10.93				✓	✓	✓	✓	✓
154	1140	16300	-	9.07				✓	✓	✓	✓	✓
177	1010	16100	-	7.88						✓	✓	✓

S87pR57, n_e = 1400 min^{-1} — **3000 Nm**

n_a min^{-1}	M_{amax} Nm	F_{Ra} N	$\varphi_{(/R)}$	i	DRN 63M 63MS 71M 71MS 80MK 80MS	DRN 80M 90S	DRN 90L	DRN 100L 100LM 100LS	DRN 112M	DRN 132M 132S
						2 3				
0.05	3000	19800	-	25987	✓					
0.05	3000	19800	-	23940	✓					
0.06	3000	19800	-	20568	✓	✓				
0.07	3000	19800	-	18265	✓	✓				
0.08	3000	19800	-	16774	✓	✓	✓			

S87pR57, n_e = 1400 min^{-1} — **3000 Nm**

n_a min^{-1}	M_{amax} Nm	F_{Ra} N	$\varphi_{(/R)}$	i	DRN 63M 63MS 71M 71MS 80MK 80MS	DRN 80M 90S	DRN 90L	DRN 100L 100LM 100LS	DRN 112M	DRN 132M 132S
0.09	3000	19800	-	14820	✓	✓	✓	✓		
0.1	3000	19800	-	13160	✓	✓	✓	✓		
0.12	3000	19800	-	11200	✓	✓	✓	✓	✓	
0.14	2900	23200	-	9904	✓	✓	✓	✓	✓	
0.16	3000	19800	-	8549	✓	✓	✓			
0.18	2950	21600	-	7643	✓	✓	✓			
0.2	3000	19800	-	6706	✓	✓	✓	✓	✓	
0.23	2950	21600	-	5875	✓	✓	✓			
0.26	3000	19800	-	5187	✓	✓	✓	✓	✓	✓
0.3	3000	19800	-	4606	✓	✓	✓	✓	✓	✓
0.36	2950	21600	-	3872	✓	✓	✓	✓	✓	✓
						 2	 2			
0.4	3000	19800	-	3475	✓	✓	✓			
0.48	2950	21600	-	2905	✓	✓	✓			
0.54	3000	19800	-	2586	✓	✓	✓	✓	✓	
0.59	3000	19800	-	2335	✓	✓	✓	✓	✓	
0.68	3000	19800	-	2054	✓	✓	✓	✓	✓	✓
0.76	3000	19800	-	1824	✓	✓	✓	✓	✓	✓
0.85	2950	21600	-	1631	✓	✓	✓	✓	✓	✓
1	3000	19800	-	1332	✓	✓	✓	✓	✓	✓
1.1	2950	21600	-	1191	✓	✓	✓	✓	✓	✓
1.3	2950	21600	-	1032	✓	✓	✓	✓	✓	✓
1.5	3000	19800	-	930	✓	✓	✓	✓	✓	✓
1.6	2950	21600	-	831	✓	✓	✓	✓	✓	✓
1.9	3000	19800	-	719	✓	✓	✓	✓	✓	✓
2.2	3000	19800	-	624	✓	✓	✓	✓	✓	✓
2.5	2950	21600	-	558	✓	✓	✓	✓	✓	✓
2.8	2950	21600	-	485		✓	✓	✓	✓	✓
3.2	2900	23200	-	435	✓	✓	✓	✓	✓	✓
3.7	2900	23200	-	378		✓	✓	✓	✓	✓
4.3	2900	23200	-	323	✓	✓	✓	✓	✓	✓
4.9	2900	23200	-	281		✓	✓	✓	✓	✓
5.4	2590	27000	-	255	✓	✓	✓	✓	✓	✓
6.3	2660	26000	-	222	✓	✓	✓	✓	✓	✓
6.8	2590	27100	-	205	✓	✓	✓	✓	✓	✓

S97, n_e = 1400 min^{-1} — **4000 Nm**

n_a min^{-1}	M_{amax} Nm	F_{Ra} N	$\varphi_{(/R)}$	i	DRN 71M 71MS 80MK 80MS	DRN 80M 90S	DRN 90L	DRN 100L 100LM 100LS	DRN 112M	DRN 132M 132S	DRN 132L 160L 160M	DRN 180L 180M	DRN 200L 225S
							 2						
4.8	4000	33200	-	286.40*	✓	✓	✓	✓	✓				
5.3	4000	33200	-	262.22	✓	✓	✓	✓	✓				
6	4000	33200	-	231.67	✓	✓	✓	✓	✓	✓			
7.1	4000	33200	-	196.52	✓	✓	✓	✓	✓	✓			
7.7	3920	33400	-	180.95	✓	✓	✓	✓	✓	✓	✓		

S97, n_e = 1400 min^{-1} — **4000 Nm**

n_a min^{-1}	M_{amax} Nm	F_{Ra} N	$\varphi_{(/R)}$	i	DRN 71M 71MS 80MK 80MS	DRN 80M 90S	DRN 90L	DRN 100L 100LM 100LS	DRN 112M	DRN 132M 132S	DRN 132L 160L 160M	DRN 180L 180M	DRN 200L 225S
8.6	3840	33500	-	161.74	✓	✓	✓	✓	✓	✓	✓		
9.6	3730	33700	-	145.60*		✓	✓	✓	✓	✓	✓	✓	
10	3650	33900	-	131.85		✓	✓	✓	✓	✓	✓	✓	
11	3510	34100	-	116.92		✓	✓	✓	✓	✓	✓	✓	✓
13	3440	34300	-	105.71				✓	✓	✓	✓	✓	✓
15	3240	34600	-	89.60*				✓	✓	✓	✓	✓	✓
17	3230	34600	-	80.85	✓	✓	✓	✓	✓				
17	3080	34800	-	78.26						✓	✓	✓	✓
19	3300	34500	-	71.43	✓	✓	✓	✓	✓	✓			
21	2900	35100	-	65.45						✓	✓	✓	✓
23	3300	34500	-	60.59	✓	✓	✓	✓	✓	✓			
25	3300	34500	-	55.79	✓	✓	✓	✓	✓	✓	✓		
28	3300	34500	-	49.87	✓	✓	✓	✓	✓	✓	✓		
31	3300	34100	-	44.89		✓	✓	✓	✓	✓	✓	✓	
34	3300	32800	-	40.65		✓	✓	✓	✓	✓	✓	✓	
38	3300	31300	-	36.05		✓	✓	✓	✓	✓	✓	✓	✓
42	3200	30400	-	32.60				✓	✓	✓	✓	✓	✓
50	3010	29000	-	27.63								✓	✓
53	2600	26100	-	26.39	✓	✓	✓	✓	✓	✓	✓		
58	2870	28000	-	24.13								✓	✓
59	2600	24500	-	23.59	✓	✓	✓	✓	✓	✓	✓		
65	2600	22800	-	21.23		✓	✓	✓	✓	✓	✓	✓	
72	2600	21200	-	19.23		✓	✓	✓	✓	✓	✓	✓	
82	2570	19700	-	17.05		✓	✓	✓	✓	✓	✓	✓	✓
90	2470	19400	-	15.42				✓	✓	✓	✓	✓	✓
107	2330	18800	-	13.07				✓	✓	✓	✓	✓	✓
122	2210	18400	-	11.41						✓	✓	✓	✓
146	2040	18200	-	9.55						✓	✓	✓	✓
169	1770	18800	-	8.26						✓	✓	✓	✓

S97R57, n_e = 1400 min^{-1} — **4200 Nm**

n_a min^{-1}	M_{amax} Nm	F_{Ra} N	$\varphi_{(/R)}$	i	DRN 63M 63MS 71M 71MS 80MK 80MS	DRN 80M 90S	DRN 90L	DRN 100L 100LM 100LS	DRN 112M	DRN 132M 132S
						 2 3				
0.04	4200	32800	-	33818	✓					
0.04	4200	32800	-	31154	✓					
0.05	4200	32800	-	27847	✓					
0.05	4200	32800	-	24641	✓					
0.06	4200	32800	-	21537	✓	✓				
0.07	4200	32800	-	18749	✓	✓	✓			
0.08	4200	32800	-	16233	✓	✓	✓	✓	✓	
0.09	4200	32800	-	14576	✓	✓	✓	✓	✓	
0.1	4200	32800	-	12752	✓	✓	✓			
0.12	4200	32800	-	11267	✓	✓	✓	✓		
0.13	4200	32800	-	10078	✓	✓	✓			

S97R57, n_e = 1400 min^{-1} — **4200 Nm**

n_a min^{-1}	M_{amax} Nm	F_{Ra} N	$\varphi_{(/R)}$	i	DRN 63M 63MS 71M 71MS 80MK 80MS	DRN 80M 90S	DRN 90L	DRN 100L 100LM 100LS	DRN 112M	DRN 132M 132S
0.16	4200	32800	-	8608	✓	✓	✓			
0.18	4200	32800	-	7554	✓	✓	✓	✓		
0.21	4200	31300	-	6640	✓	✓				
0.24	4200	31300	-	5780	✓	✓	✓			
0.28	4200	31300	-	4937	✓	✓	✓			
0.31	4200	31300	-	4444	✓	✓	✓			
0.34	4200	31300	-	4017	✓	✓	✓	✓	✓	
0.4	4200	31300	-	3453	✓	✓	✓			
0.45	4200	31300	-	3108	✓	✓	✓			
0.52	4200	31300	-	2654	✓	✓	✓			
0.6	4200	31300	-	2329	✓	✓	✓	✓		
0.67	4200	31300	-	2081	✓	✓	✓	✓	✓	✓
0.75	4200	31300	-	1860	✓	✓	✓	✓	✓	✓
0.88	4200	31300	-	1574	✓	✓	✓	✓	✓	✓
						2	2			
1	4200	31300	-	1394	✓	✓	✓			
1.1	4200	31300	-	1223	✓	✓	✓	✓		
1.3	4200	31300	-	1070	✓	✓	✓			
1.5	4200	31300	-	928	✓	✓	✓	✓	✓	
1.6	4200	31300	-	824	✓	✓	✓	✓	✓	✓
1.9	4200	32800	-	714	✓	✓	✓	✓	✓	✓
2.2	4200	31300	-	626	✓	✓	✓	✓	✓	✓
2.6	4200	31300	-	538	✓	✓	✓	✓	✓	✓
2.8	4200	31400	-	484	✓	✓	✓	✓	✓	✓
3.3	4200	31400	-	420	✓	✓	✓	✓	✓	✓
3.7	4200	31400	-	376	✓	✓	✓	✓	✓	✓
4.2	4200	31500	-	327	✓	✓	✓	✓	✓	
4.8	4200	31500	-	287	✓	✓	✓	✓	✓	✓
5.5	4200	31500	-	252	✓	✓	✓	✓	✓	✓
6.3	4200	31600	-	219		✓	✓	✓	✓	✓
6.8	4200	31600	-	205	✓	✓	✓	✓	✓	✓

S97p, n_e = 1400 min^{-1} — **4300 Nm**

n_a min^{-1}	M_{amax} Nm	F_{Ra} N	$\varphi_{(/R)}$	i	DRN 71M 71MS 80MK 80MS	DRN 80M 90S	DRN 90L	DRN 100L 100LM 100LS	DRN 112M	DRN 132M 132S	DRN 132L 160L 160M	DRN 180L 180M	DRN 200L 225S
							2						
4.8	4300	32500	-	286.40*	✓	✓	✓	✓	✓				
5.3	4300	32500	-	262.22	✓	✓	✓	✓	✓				
6	4300	32500	-	231.67	✓	✓	✓	✓	✓	✓			
7.1	4300	32500	-	196.52	✓	✓	✓	✓	✓	✓			
7.7	4300	32500	-	180.95	✓	✓	✓	✓	✓	✓	✓		
8.6	4300	32500	-	161.74	✓	✓	✓	✓	✓	✓	✓		
9.6	4300	32500	-	145.60*		✓	✓	✓	✓	✓	✓	✓	
10	4300	32500	-	131.85		✓	✓	✓	✓	✓	✓	✓	
11	4300	32500	-	116.92		✓	✓	✓	✓	✓	✓	✓	✓

S97p, n_e = 1400 min^{-1} — **4300 Nm**

n_a min^{-1}	M_{amax} Nm	F_{Ra} N	$\varphi_{(/R)}$	i	DRN 71M 71MS 80MK 80MS	DRN 80M 90S	DRN 90L	DRN 100L 100LM 100LS	DRN 112M	DRN 132M 132S	DRN 132L 160L 160M	DRN 180L 180M	DRN 200L 225S
13	4290	32600	-	105.71				✓	✓	✓	✓	✓	✓
15	4070	33000	-	89.60*				✓	✓	✓	✓	✓	✓
17	3700	33800	-	80.85	✓	✓	✓	✓	✓				
17	3910	33400	-	78.26						✓	✓	✓	✓
19	4100	33000	-	71.43	✓	✓	✓	✓	✓	✓			
21	3520	34100	-	65.45						✓	✓	✓	✓
23	3980	33200	-	60.59	✓	✓	✓	✓	✓	✓			
25	3910	33400	-	55.79	✓	✓	✓	✓	✓	✓	✓		
28	3810	33600	-	49.87	✓	✓	✓	✓	✓	✓	✓		
31	3710	33100	-	44.89		✓	✓	✓	✓	✓	✓	✓	
34	3600	32200	-	40.65		✓	✓	✓	✓	✓	✓	✓	
38	3500	30900	-	36.05		✓	✓	✓	✓	✓	✓	✓	✓
42	3390	30000	-	32.60				✓	✓	✓	✓	✓	✓
50	3230	28600	-	27.63								✓	✓
53	2600	26800	-	26.39	✓	✓	✓	✓	✓	✓	✓		
58	3080	27500	-	24.13								✓	✓
59	2600	25300	-	23.59	✓	✓	✓	✓	✓	✓	✓		
65	2600	23500	-	21.23		✓	✓	✓	✓	✓	✓	✓	
72	2600	21900	-	19.23		✓	✓	✓	✓	✓	✓	✓	
82	2570	20300	-	17.05		✓	✓	✓	✓	✓	✓	✓	✓
90	2470	20000	-	15.42				✓	✓	✓	✓	✓	✓
107	2330	19300	-	13.07				✓	✓	✓	✓	✓	✓
122	2210	18900	-	11.41						✓	✓	✓	✓
146	2040	18600	-	9.55						✓	✓	✓	✓
169	1770	19200	-	8.26						✓	✓	✓	✓

S97pR57, n_e = 1400 min^{-1} — **4300 Nm**

n_a min^{-1}	M_{amax} Nm	F_{Ra} N	$\varphi_{(/R)}$	i	DRN 63M 63MS 71M 71MS 80MK 80MS	DRN 80M 90S	DRN 90L	DRN 100L 100LM 100LS	DRN 112M	DRN 132M 132S
						2 3				
0.04	4300	32500	-	33818	✓					
0.04	4300	32500	-	31154	✓					
0.05	4300	32500	-	27847	✓					
0.05	4300	32500	-	24641	✓					
0.06	4300	32500	-	21537	✓	✓				
0.07	4300	32500	-	18749	✓	✓	✓			
0.08	4300	32500	-	16233	✓	✓	✓	✓	✓	
0.09	4300	32500	-	14576	✓	✓	✓	✓	✓	
0.1	4300	32500	-	12752	✓	✓	✓			
0.12	4300	32500	-	11267	✓	✓	✓	✓		
0.13	4300	32500	-	10078	✓	✓	✓			
0.16	4300	32500	-	8608	✓	✓	✓			
0.18	4300	32500	-	7554	✓	✓	✓	✓		
0.21	4300	30200	-	6640	✓	✓				
0.24	4300	30200	-	5780	✓	✓	✓			

S97pR57, n_e = 1400 min^{-1} **4300 Nm**

n_a min^{-1}	M_{amax} Nm	F_{Ra} N	$\varphi_{(/R)}$	i	DRN 63M 63MS 71M 71MS 80MK 80MS	DRN 80M 90S	DRN 90L	DRN 100L 100LM 100LS	DRN 112M	DRN 132M 132S
0.28	4300	30200	-	4937	✓	✓	✓			
0.31	4300	30200	-	4444	✓	✓	✓			
0.34	4300	30200	-	4017	✓	✓	✓	✓	✓	
0.4	4300	30200	-	3453	✓	✓	✓			
0.45	4300	30200	-	3108	✓	✓	✓			
0.52	4300	30200	-	2654	✓	✓	✓			
0.6	4300	30200	-	2329	✓	✓	✓	✓		
0.67	4300	30200	-	2081	✓	✓	✓	✓	✓	✓
0.75	4300	30200	-	1860	✓	✓	✓	✓	✓	✓
0.88	4300	30200	-	1574	✓	✓	✓	✓	✓	✓
										
1	4300	30200	-	1394	✓	✓	✓			
1.1	4300	30200	-	1223	✓	✓	✓	✓		
1.3	4300	30200	-	1070	✓	✓	✓			
1.5	4300	30200	-	928	✓	✓	✓	✓	✓	
1.6	4300	30200	-	824	✓	✓	✓	✓	✓	✓
1.9	4300	32500	-	714	✓	✓	✓	✓	✓	✓
2.2	4300	30300	-	626	✓	✓	✓	✓	✓	✓
2.6	4300	30400	-	538	✓	✓	✓	✓	✓	✓
2.8	4300	30500	-	484	✓	✓	✓	✓	✓	✓
3.3	4300	30500	-	420	✓	✓	✓	✓	✓	✓
3.7	4300	30600	-	376	✓	✓	✓	✓	✓	✓
4.2	4300	30600	-	327	✓	✓	✓	✓	✓	
4.8	4300	30700	-	287	✓	✓	✓	✓	✓	✓
5.5	4300	30700	-	252	✓	✓	✓	✓	✓	✓
6.3	4300	30700	-	219		✓	✓	✓	✓	✓
6.8	4300	30700	-	205	✓	✓	✓	✓	✓	✓

4.5.2 Selection tables S..DRN.. in kW

P_N = 0.09 kW

n_a min^{-1}	M_a Nm	i	F_{Ra} N	SEW f_B	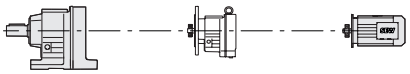			m kg
5.8	97	157.43	3000	1.00	**S37p**	-	**DRN63MR6**	12
6.4	91	144.40*	3000	1.05	**SF37p**			13
7.5	80	122.94	3000	1.20	**SA37p**			11
8.7	70	106.00*	3000	1.40	**SAF37p**			13
9.3	66	98.80*	3000	1.50				

P_N = 0.12 kW

n_a min^{-1}	M_a Nm	i	F_{Ra} N	SEW f_B	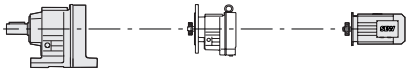			m kg
0.12	4860	11267	20600	0.90				
0.14	4440	10078	31200	0.95	**S97p**	**R57**	**DRN63MS4**	170
0.16	3680	8608	33800	1.15	**SF97p**			200
0.18	3260	7554	34600	1.30	**SA97p**			165
0.21	3850	6640	33500	1.10	**SAF97p**			190
0.24	3350	5780	34400	1.30				
0.12	4750	11267	25100	0.90	**S97**	**R57**	**DRN63MS4**	170
0.14	4340	10078	32500	0.95	**SF97**			200
0.16	3600	8608	34000	1.15	**SA97**			165
0.18	3180	7554	34700	1.30	**SAF97**			190
0.21	2760	6706	26200	1.10	**S87p**	**R57**	**DRN63MS4**	110
0.23	2460	5875	27600	1.20	**SF87p**			130
0.27	2040	5187	28400	1.45	**SA87p**			105
0.30	1810	4606	28700	1.65	**SAF87p**			120
0.36	1500	3872	29200	1.95				
0.21	2690	6706	27100	0.95	**S87**	**R57**	**DRN63MS4**	110
0.23	2400	5875	27700	1.05	**SF87**			130
0.27	1990	5187	28500	1.25	**SA87**			105
0.30	1770	4606	28800	1.40	**SAF87**			120
0.36	1470	3872	29200	1.70				
0.30	1800	4618	10900	0.85				
0.35	1610	3992	11700	0.95				
0.39	1410	3540	12600	1.05				
0.45	1230	3098	13400	1.20				
0.50	1580	2753	10800	0.90	**S77p**	**R37**	**DRN63MS4**	59
0.58	1350	2374	12000	1.05	**SF77p**			68
0.66	1180	2083	12800	1.20	**SA77p**			58
0.76	1000	1813	13700	1.45	**SAF77p**			65
0.79	950	1745	14000	1.50				
0.86	870	1600	14400	1.65				
0.98	765	1404	14900	1.90				
1.1	670	1245	15400	2.2				
0.39	1370	3540	7230	0.90				
0.45	1200	3098	12300	1.05				
0.58	1330	2374	10600	0.95				
0.66	1170	2083	12600	1.05	**S77**	**R37**	**DRN63MS4**	59
0.76	990	1813	13900	1.25	**SF77**			68
0.79	940	1745	14200	1.30	**SA77**			58
0.86	860	1600	14600	1.45	**SAF77**			65
0.98	755	1404	15100	1.65				
1.1	660	1245	15500	1.90				

P_N = 0.12 kW

n_a min^{-1}	M_a Nm	i	F_{Ra} N	SEW f_B	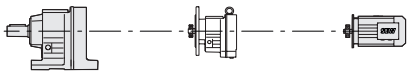			m kg
0.88	810	1559	8560	0.85	**S67p SF67p SA67p SAF67p**	**R37**	**DRN63MS4**	40
1.0	700	1363	9230	1.00				46
1.2	600	1194	9840	1.20				41
1.3	540	1045	10200	1.20				45
1.5	470	914	10600	1.35				
1.7	425	809	10900	1.70	**S67p SF67p SA67p SAF67p**	**R37**	**DRN63MS4**	39
1.9	375	712	11200	1.90				46
2.2	310	615	11400	2.3				40
2.5	285	543	11400	2.5				45
1.2	590	1194	7990	0.95	**S67 SF67 SA67 SAF67**	**R37**	**DRN63MS4**	40
1.3	530	1045	8560	1.05				46
1.5	460	914	9180	1.25				41
								45
1.7	420	809	9460	1.35	**S67 SF67 SA67 SAF67**	**R37**	**DRN63MS4**	
1.9	370	712	9770	1.55				39
2.2	305	615	10100	1.85				46
2.5	275	543	10200	2.1				40
2.9	225	469	10400	2.5				45
3.3	205	424	10500	2.8				
3.8	187	365	10500	3.0				
1.8	390	750	6110	0.95	**S57p SF57p SA57p SAF57p**	**R17**	**DRN63MS4**	
2.1	335	655	6740	1.10				
2.4	290	574	7150	1.25				21
2.7	255	506	7450	1.45				25
3.2	225	438	7660	1.65				21
3.6	199	388	7800	1.85				23
4.1	182	336	7890	2.0				
4.7	157	294	8000	2.4				
5.1	152	269	8020	2.4				
2.1	330	655	6800	0.90	**S57 SF57 SA57 SAF57**	**R17**	**DRN63MS4**	
2.4	285	574	7200	1.05				
2.7	250	506	7480	1.20				21
3.2	215	438	7700	1.40				25
3.6	189	388	7850	1.60				21
4.1	169	336	7950	1.75				23
4.7	145	294	8050	2.1				
5.1	139	269	8070	2.2				
3.2	220	438	4890	0.90	**S47p SF47p SA47p SAF47p**	**R17**	**DRN63MS4**	
3.6	193	388	5130	1.05				
4.1	176	336	5250	1.15				17
4.7	153	294	5380	1.30				21
5.4	122	257	5570	1.65				18
6.0	128	229	5500	1.55				20
6.9	113	200	5580	1.75				
7.4	106	187	5610	1.90				
3.2	215	438	4920	0.85	**S47 SF47 SA47 SAF47**	**R17**	**DRN63MS4**	
3.6	189	388	5160	1.00				
4.1	169	336	5290	1.10				17
4.7	143	294	5420	1.30				21
5.4	98	257	5670	1.90				18
6.0	118	229	5550	1.55				20
6.9	102	200	5620	1.80				
7.4	96	187	5640	1.95				

P_N = 0.12 kW

n_a min^{-1}	M_a Nm	i	F_{Ra} N	SEW f_B	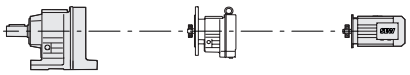			m kg
6.0	125	232	2670	0.85				
6.8	111	202	3000	0.95				
7.7	100	179	3000	1.05	**S37p**			14
8.7	90	158	3000	1.15	**SF37p**	**R17**	**DRN63MS4**	15
9.6	83	144	3000	1.25	**SA37p**			14
12	69	118	3000	1.55	**SAF37p**			15
13	64	110	3000	1.65				
6.8	103	202	3000	0.90				
7.7	91	179	3000	1.00	**S37**			14
8.7	82	158	3000	1.15	**SF37**	**R17**	**DRN63MS4**	15
9.6	75	144	3000	1.20	**SA37**			14
12	61	118	3000	1.50	**SAF37**			15
13	57	110	3000	1.60				
4.3	183	201.00*	7880	1.95	**S57p**			18
4.7	170	184.80*	7940	2.1	**SF57p**	**-**	**DRN63M6**	22
5.5	149	158.12	8030	2.4	**SA57p**			18
6.4	132	137.05	8090	2.8	**SAF57p**			21
4.3	148	201.00*	8040	2.0	**S57**			18
4.7	137	184.80*	8080	2.2	**SF57**	**-**	**DRN63M6**	22
5.5	120	158.12	8130	2.5	**SA57**			18
6.4	106	137.05	8170	2.8	**SAF57**			21
4.3	175	201.00*	5320	1.10				
4.7	164	184.80*	5380	1.20	**S47p**			15
5.5	144	158.12	5470	1.35	**SF47p**	**-**	**DRN63M6**	18
6.4	128	137.05	5550	1.55	**SA47p**			16
6.8	121	128.10*	5580	1.60	**SAF47p**			17
6.9	120	201.00*	5580	1.60				
7.5	111	184.80*	5620	1.75	**S47p**			14
8.7	97	158.12	5670	2.0	**SF47p**	**-**	**DRN63MS4**	17
10	85	137.05	5720	2.3	**SA47p**			15
11	80	128.10*	5740	2.4	**SAF47p**			17
12	70	110.73	5770	2.8				
4.3	143	201.00*	5470	1.25				
4.7	132	184.80*	5520	1.35	**S47**			15
5.5	116	158.12	5590	1.50	**SF47**	**-**	**DRN63M6**	18
6.4	102	137.05	5650	1.70	**SA47**			16
6.8	96	128.10*	5670	1.80	**SAF47**			17
6.9	95	201.00*	5680	1.80				
7.5	89	184.80*	5700	1.90	**S47**			14
8.7	77	158.12	5740	2.2	**SF47**	**-**	**DRN63MS4**	17
10	68	137.05	5770	2.5	**SA47**			15
11	64	128.10*	5790	2.6	**SAF47**			17
12	57	110.73	5810	3.0				
7.1	111	122.94	3000	0.85				
8.2	98	106.00*	3000	1.00	**S37p**			12
8.8	92	98.80*	3000	1.05	**SF37p**	**-**	**DRN63M6**	13
10	82	86.36	3000	1.20	**SA37p**			11
11	78	80.96	3000	1.25	**SAF37p**			13
12	70	71.44*	3000	1.45				

P_N = 0.12 kW

n_a min^{-1}	M_a Nm	i	F_{Ra} N	SEW f_B	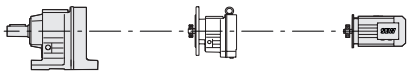			m kg
8.8	93	157.43	3000	1.00				
9.6	86	144.40*	3000	1.10				
11	75	122.94	3000	1.30				
13	66	106.00*	3000	1.50				
14	62	98.80*	3000	1.60	**S37p**			11
16	54	86.36	3000	1.80	**SF37p**	-	**DRN63MS4**	12
17	51	80.96	3000	1.95	**SA37p**			10
19	46	71.44*	3000	2.2	**SAF37p**			12
22	41	63.33	3000	2.4				
25	40	55.93	3000	2.6				
27	37	51.30*	3000	2.8				
5.5	110	157.43	3000	0.85				
6.0	102	144.40*	3000	0.90	**S37**			12
7.1	89	122.94	3000	1.05	**SF37**	-	**DRN63M6**	13
8.2	78	106.00*	3000	1.20	**SA37**			11
8.8	73	98.80*	3000	1.25	**SAF37**			13
10	65	86.36	3000	1.40				
8.8	74	157.43	3000	1.25				
9.6	68	144.40*	3000	1.35				
11	59	122.94	3000	1.55				
13	52	106.00*	3000	1.70				
14	49	98.80*	3000	1.75				
16	44	86.36	3000	1.95				
17	41	80.96	3000	2.1				
19	37	71.44*	3000	2.3				
22	33	63.33	3000	2.5				
25	35	55.93	3000	2.3	**S37**			11
27	33	51.30*	3000	2.5	**SF37**	-	**DRN63MS4**	12
32	28	43.68	3000	2.9	**SA37**			10
37	25	37.66	3000	3.2	**SAF37**			12
39	23	35.10*	3000	3.4				
45	20	30.68	3000	3.8				
48	19	28.76	3000	3.9				
54	17	25.38*	3000	4.4				
61	15	22.50*	3000	4.8				
69	14	19.89	3000	3.6				
76	13	18.24*	3000	4.0				
89	11	15.53	2870	4.4				

P_N = 0.18 kW

n_a min^{-1}	M_a Nm	i	F_{Ra} N	SEW f_B	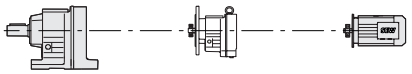			m kg
					S87p			110
0.30	2940	4606	21800	1.00	**SF87p**	**R57**	**DRN63M4**	130
0.36	2460	3872	27600	1.20	**SA87p**			105
					SAF87p			125
0.40	2380	3475	27700	1.25				
0.47	1990	2905	28500	1.50				
0.53	1720	2586	28900	1.75	**S87p**			110
0.59	1540	2335	29100	1.95	**SF87p**	**R57**	**DRN63M4**	130
0.67	1340	2054	29400	2.3	**SA87p**			105
0.75	1210	1824	29500	2.5	**SAF87p**			120
0.84	1110	1631	29600	2.7				

P_N = 0.18 kW

n_a min^{-1}	M_a Nm	i	F_{Ra} N	SEW f_B	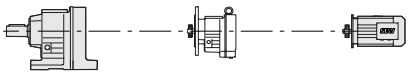			m kg
0.30	2870	4606	24000	0.85	**S87**	**R57**	**DRN63M4**	110
0.36	2400	3872	27700	1.05	**SF87**			130
					SA87			105
					SAF87			125
0.40	2320	3475	27900	1.10				
0.47	1940	2905	28500	1.30				
0.53	1680	2586	28900	1.50	**S87**	**R57**	**DRN63M4**	110
0.59	1500	2335	29200	1.65	**SF87**			130
0.67	1300	2054	29400	1.95	**SA87**			105
0.75	1150	1824	29500	2.2	**SAF87**			120
0.84	1030	1631	29700	2.4				
0.76	1570	1813	10800	0.90				
0.79	1500	1745	11200	0.95	**S77p**			60
0.86	1380	1600	11800	1.05	**SF77p**	**R37**	**DRN63M4**	69
0.98	1210	1404	12700	1.20	**SA77p**			59
1.1	1060	1245	13400	1.35	**SAF77p**			66
1.3	990	1100	13800	1.45				
1.4	850	954	14500	1.70	**S77p**			59
1.6	745	837	15000	1.95	**SF77p**	**R37**	**DRN63M4**	69
1.9	620	714	15600	2.3	**SA77p**			59
2.2	550	637	15700	2.6	**SAF77p**			66
2.4	500	574	15700	2.9				
0.98	1190	1404	12400	1.05	**S77**			60
1.1	1050	1245	13500	1.20	**SF77**	**R37**	**DRN63M4**	69
					SA77			59
					SAF77			66
1.3	980	1100	14000	1.25				
1.4	840	954	14700	1.50	**S77**			59
1.6	735	837	15200	1.70	**SF77**	**R37**	**DRN63M4**	69
1.9	615	714	15700	2.0	**SA77**			59
2.2	545	637	15900	2.3	**SAF77**			66
2.4	495	574	16000	2.5				
1.7	665	809	9440	1.10				
1.9	585	712	9920	1.25				
2.2	495	615	10500	1.45	**S67p**			40
2.5	445	543	10800	1.55	**SF67p**	**R37**	**DRN63M4**	47
2.9	380	469	11200	1.90	**SA67p**			41
3.3	350	424	11300	2.1	**SAF67p**			46
3.8	320	365	11400	2.3				
1.9	575	712	8150	1.00				
2.2	485	615	8990	1.20	**S67**			40
2.5	435	543	9370	1.30	**SF67**	**R37**	**DRN63M4**	47
2.9	360	469	9820	1.60	**SA67**			41
3.3	325	424	10000	1.75	**SAF67**			46
3.8	295	365	10200	1.95				
2.7	400	506	5950	0.90				
3.1	350	438	6570	1.05				
3.5	315	388	6950	1.20				
4.1	285	336	7230	1.30	**S57p**			22
4.7	250	294	7490	1.50	**SF57p**	**R17**	**DRN63M4**	25
5.1	235	269	7580	1.55	**SA57p**			21
6.0	205	229	7770	1.80	**SAF57p**			24
6.7	186	204	7870	2.0				
7.3	170	187	7940	2.2				

P_N = 0.18 kW

n_a min^{-1}	M_a Nm	i	F_{Ra} N	SEW f_B	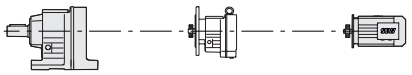			m kg
3.1	340	438	6700	0.90				
3.5	300	388	7100	1.00				
4.1	265	336	7380	1.15	**S57**			22
4.7	230	294	7630	1.30	**SF57**	**R17**	**DRN63M4**	25
5.1	215	269	7700	1.40	**SA57**			21
6.0	185	229	7870	1.60	**SAF57**			24
6.7	167	204	7960	1.80				
7.3	152	187	8020	1.95				
4.7	240	294	3990	0.85				
5.3	193	257	5220	1.05				
6.0	199	229	5100	1.00	**S47p**			18
6.9	176	200	5260	1.15	**SF47p**	**R17**	**DRN63M4**	21
7.3	166	187	5320	1.20	**SA47p**			19
8.3	147	165	5410	1.35	**SAF47p**			21
9.3	133	148	5480	1.50				
11	119	131	5550	1.70				
4.7	225	294	4820	0.80				
5.3	155	257	5410	1.20				
6.0	183	229	5210	1.00	**S47**			18
6.9	160	200	5340	1.15	**SF47**	**R17**	**DRN63M4**	21
7.3	150	187	5390	1.25	**SA47**			19
8.3	132	165	5480	1.40	**SAF47**			21
9.3	119	148	5540	1.55				
11	106	131	5600	1.75				
4.2	300	217.41	11500	2.2	**S67p**			30
4.8	265	190.11	11500	2.4	**SF67p**	-	**DRN71MS6**	36
5.1	255	180.60*	11600	2.5	**SA67p**			31
					SAF67p			35
4.2	240	217.41	10400	2.3	**S67**			30
4.8	215	190.11	10400	2.6	**SF67**	-	**DRN71MS6**	36
5.1	205	180.60*	10500	2.7	**SA67**			31
					SAF67			35
6.8	185	201.00*	7870	1.90	**S57p**			18
7.4	172	184.80*	7930	2.1	**SF57p**	-	**DRN63M4**	22
8.7	150	158.12	8030	2.4	**SA57p**			18
10	131	137.05	8100	2.7	**SAF57p**			21
4.6	210	201.00*	7730	1.40	**S57**			19
5.0	197	184.80*	7810	1.50	**SF57**	-	**DRN71MS6**	23
5.8	172	158.12	7930	1.70	**SA57**			19
6.7	152	137.05	8020	1.95	**SAF57**			22
6.8	149	201.00*	8030	2.0	**S57**			18
7.4	138	184.80*	8070	2.1	**SF57**	-	**DRN63M4**	22
8.7	120	158.12	8130	2.5	**SA57**			18
10	106	137.05	8170	2.8	**SAF57**			21
6.8	180	201.00*	5290	1.05				
7.4	167	184.80*	5360	1.15				
8.7	146	158.12	5460	1.35				
10	128	137.05	5540	1.50	**S47p**			15
11	121	128.10*	5580	1.60	**SF47p**	-	**DRN63M4**	18
12	106	110.73	5640	1.85	**SA47p**			16
15	91	94.08*	5700	2.2	**SAF47p**			17
16	82	84.00*	5730	2.4				
19	70	71.75*	5770	2.8				
20	75	69.39	5730	2.7				

P_N = 0.18 kW

n_a min^{-1}	M_a Nm	i	F_{Ra} N	SEW f_B	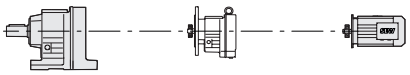			m kg
4.6	205	201.00*	5150	0.90	**S47**	-	**DRN71MS6**	15
5.0	190	184.80*	5230	0.95	**SF47**			19
5.8	166	158.12	5360	1.05	**SA47**			16
6.7	147	137.05	5450	1.15	**SAF47**			18
7.1	138	128.10*	5490	1.25				
6.8	143	201.00*	5470	1.20				
7.4	133	184.80*	5520	1.25				
8.7	116	158.12	5590	1.45				
10	103	137.05	5650	1.65	**S47**			15
11	97	128.10*	5670	1.75	**SF47**	-	**DRN63M4**	18
12	85	110.73	5710	1.95	**SA47**			16
15	74	94.08*	5760	2.3	**SAF47**			17
16	67	84.00*	5780	2.5				
19	58	71.75*	5810	2.9				
20	67	69.39	5760	2.3				
11	113	122.94	3000	0.85				
13	99	106.00*	3000	1.00				
14	93	98.80*	3000	1.05				
16	82	86.36	3000	1.20				
17	77	80.96	3000	1.30	**S37p**			12
19	69	71.44*	3000	1.45	**SF37p**	-	**DRN63M4**	13
22	61	63.33	3000	1.60	**SA37p**			11
25	60	55.93	3000	1.75	**SAF37p**			13
27	56	51.30*	3000	1.85				
31	48	43.68	3000	2.2				
37	41	37.66	3000	2.5				
39	39	35.10*	3000	2.7				
8.7	111	157.43	3000	0.85				
9.5	103	144.40*	3000	0.90				
11	90	122.94	3000	1.00				
13	79	106.00*	3000	1.10				
14	74	98.80*	3000	1.20				
16	66	86.36	3000	1.30				
17	62	80.96	3000	1.35				
19	56	71.44*	3000	1.50				
22	50	63.33	3000	1.65				
25	53	55.93	3000	1.50				
27	49	51.30*	3000	1.65				
31	42	43.68	3000	1.90	**S37**	-	**DRN63M4**	12
37	37	37.66	3000	2.1	**SF37**			13
39	35	35.10*	3000	2.3	**SA37**			11
45	30	30.68	3000	2.5	**SAF37**			13
48	29	28.76	3000	2.6				
54	26	25.38*	3000	2.9				
61	23	22.50*	3000	3.2				
69	22	19.89	2980	2.4				
75	20	18.24*	2920	2.6				
89	17	15.53	2790	2.9				
103	15	13.39	2680	3.3				
110	14	12.48*	2630	3.5				
126	12	10.91	2530	4.0				
134	11	10.23	2480	4.1				

P_N = 0.25 kW

n_a min^{-1}	M_a Nm	i	F_{Ra} N	SEW f_B	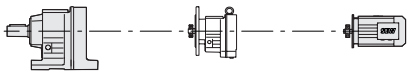			m kg
0.48	2770	2905	26100	1.05				
0.54	2410	2586	27700	1.25	**S87p**			110
0.60	2160	2335	28200	1.40	**SF87p**	**R57**	**DRN71MS4**	130
0.68	1890	2054	28600	1.60	**SA87p**			105
0.77	1720	1824	28900	1.75	**SAF87p**			120
0.86	1570	1631	29100	1.90				
0.48	2700	2905	27000	0.95				
0.54	2350	2586	27800	1.05				
0.60	2110	2335	28300	1.20	**S87**			110
0.68	1830	2054	28700	1.35	**SF87**	**R57**	**DRN71MS4**	130
0.77	1630	1824	29000	1.55	**SA87**			105
0.86	1450	1631	29200	1.70	**SAF87**			120
1.5	860	930	29800	2.9				
1.3	1370	1100	11900	1.05				
1.5	1180	954	12800	1.20				
1.7	1030	837	13600	1.40	**S77p**			60
2.0	870	714	14400	1.70	**SF77p**	**R37**	**DRN71MS4**	70
2.2	770	637	14900	1.90	**SA77p**			59
2.5	700	574	15200	2.1	**SAF77p**			66
2.8	610	499	15700	2.4				
1.5	1160	954	12700	1.05				
1.7	1020	837	13700	1.20	**S77**			60
2.0	850	714	14600	1.45	**SF77**	**R37**	**DRN71MS4**	70
2.2	755	637	15100	1.65	**SA77**			59
2.5	685	574	15400	1.80	**SAF77**			66
2.8	585	499	15800	2.1				
2.0	810	712	8560	0.90				
2.3	685	615	9300	1.05				
2.6	620	543	9710	1.15	**S67p**			41
3.0	535	469	10200	1.35	**SF67p**	**R37**	**DRN71MS4**	47
3.3	490	424	10500	1.45	**SA67p**			42
3.9	440	365	10800	1.65	**SAF67p**			46
4.4	385	319	11200	1.70				
5.0	340	281	11300	2.0				
2.6	600	543	7860	0.95				
3.0	505	469	8810	1.15	**S67**			41
3.3	455	424	9200	1.25	**SF67**	**R37**	**DRN71MS4**	47
3.9	405	365	9540	1.40	**SA67**			42
4.4	355	319	9860	1.60	**SAF67**			46
5.0	310	281	10100	1.85				
4.2	395	336	6040	0.95				
4.8	345	294	6620	1.05				
5.2	325	269	6830	1.15	**S57p**			22
6.2	285	229	7220	1.30	**SF57p**	**R17**	**DRN71MS4**	26
6.9	255	204	7430	1.45	**SA57p**			22
7.5	235	187	7580	1.55	**SAF57p**			25
8.5	210	165	7740	1.75				
11	169	131	7950	2.2				
4.8	320	294	6910	0.95				
5.2	300	269	7100	1.00				
6.2	255	229	7440	1.15	**S57**			22
6.9	230	204	7610	1.30	**SF57**	**R17**	**DRN71MS4**	26
7.5	210	187	7730	1.40	**SA57**			22
8.5	187	165	7860	1.60	**SAF57**			25
11	150	131	8030	2.0				

P_N = 0.25 kW

n_a min^{-1}	M_a Nm	i	F_{Ra} N	SEW f_B	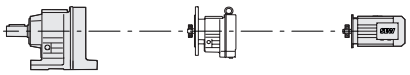			m kg
4.2	415	217.41	11200	1.55	**S67p**	-	**DRN71M6**	31
4.8	370	190.11	11300	1.75	**SF67p**			37
5.1	350	180.60*	11300	1.85	**SA67p**			32
5.8	315	158.45	11400	2.1	**SAF67p**			36
6.5	285	217.41	11500	2.3	**S67p**	-	**DRN71MS4**	30
7.4	250	190.11	11600	2.6	**SF67p**			36
7.8	240	180.60*	11600	2.7	**SA67p**			31
					SAF67p			35
4.2	335	217.41	9950	1.65	**S67**	-	**DRN71M6**	31
4.8	300	190.11	10100	1.85	**SF67**			37
5.1	285	180.60*	10200	1.95	**SA67**			32
5.8	255	158.45	10300	2.2	**SAF67**			36
6.5	230	217.41	10400	2.3				
7.4	205	190.11	10500	2.5				
7.8	196	180.60*	10500	2.7	**S67**	-	**DRN71MS4**	30
8.9	174	158.45	10600	3.0	**SF67**			36
10	151	134.40*	10600	3.5	**SA67**			31
12	137	121.33	10600	3.8	**SAF67**			35
13	122	106.75*	10700	4.3				
4.6	365	201.00*	6410	0.95				
5.0	340	184.80*	6690	1.05	**S57p**	-	**DRN71M6**	20
5.8	300	158.12	7100	1.20	**SF57p**			24
6.7	265	137.05	7390	1.40	**SA57p**			20
7.1	250	128.10*	7500	1.45	**SAF57p**			23
7.0	255	201.00*	7460	1.40				
7.6	235	184.80*	7590	1.50				
8.9	205	158.12	7770	1.75	**S57p**	-	**DRN71MS4**	19
10	179	137.05	7900	2.0	**SF57p**			23
11	168	128.10*	7950	2.2	**SA57p**			19
13	146	110.73	8040	2.5	**SAF57p**			22
15	125	94.08*	8120	2.8				
17	113	84.00*	8160	3.0				
4.6	295	201.00*	7140	1.00				
5.0	275	184.80*	7310	1.10	**S57**	-	**DRN71M6**	20
5.8	240	158.12	7560	1.25	**SF57**			24
6.7	210	137.05	7730	1.40	**SA57**			20
7.1	199	128.10*	7800	1.50	**SAF57**			23
7.0	200	201.00*	7780	1.45				
7.6	188	184.80*	7860	1.55				
8.9	164	158.12	7970	1.80	**S57**	-	**DRN71MS4**	19
10	145	137.05	8050	2.0	**SF57**			23
11	136	128.10*	8080	2.2	**SA57**			19
13	120	110.73	8130	2.5	**SAF57**			22
15	104	94.08*	8180	2.8				
17	94	84.00*	8210	3.2				

P_N = 0.25 kW

n_a min^{-1}	M_a Nm	i	F_{Ra} N	SEW f_B	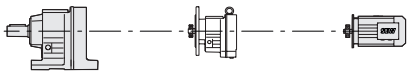			m kg
7.0	245	201.00*	3410	0.80				
7.6	230	184.80*	5020	0.85				
8.9	199	158.12	5190	1.00				
10	175	137.05	5320	1.10				
11	164	128.10*	5370	1.20				
13	144	110.73	5470	1.35	**S47p**			15
15	124	94.08*	5570	1.60	**SF47p**	-	**DRN71MS4**	19
17	111	84.00*	5620	1.80	**SA47p**			16
20	96	71.75*	5680	2.0	**SAF47p**			18
20	102	69.39	5630	1.95				
21	90	67.20*	5700	2.1				
22	95	63.80*	5660	2.1				
26	81	54.59	5710	2.5				
30	71	47.32	5610	2.8				
7.0	196	201.00*	5200	0.85				
7.6	182	184.80*	5280	0.95				
8.9	159	158.12	5400	1.05				
10	140	137.05	5490	1.20				
11	132	128.10*	5520	1.25				
13	116	110.73	5590	1.45	**S47**			15
15	101	94.08*	5660	1.65	**SF47**	-	**DRN71MS4**	19
17	91	84.00*	5690	1.85	**SA47**			16
20	79	71.75*	5740	2.1	**SAF47**			18
20	91	69.39	5670	1.70				
21	75	67.20*	5750	2.2				
22	84	63.80*	5700	1.85				
26	73	54.59	5740	2.1				
30	64	47.32	5670	2.4				
14	126	98.80*	2550	0.75				
16	111	86.36	3000	0.90				
17	105	80.96	3000	0.95				
20	93	71.44*	3000	1.05				
22	83	63.33	3000	1.20				
25	82	55.93	3000	1.25				
26	71	53.83	3000	1.30				
27	76	51.30*	3000	1.35	**S37p**			12
32	65	43.68	3000	1.60	**SF37p**	-	**DRN71MS4**	13
37	56	37.66	3000	1.85	**SA37p**			12
40	53	35.10*	3000	2.0	**SAF37p**			13
46	46	30.68	3000	2.3				
49	43	28.76	3000	2.4				
55	38	25.38*	3000	2.6				
62	34	22.50*	3000	2.8				
71	31	19.89	2820	2.5				
77	29	18.24*	2770	2.7				

P_N = 0.25 kW

n_a min^{-1}	M_a Nm	i	F_{Ra} N	SEW f_B	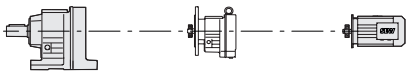			m kg
14	101	98.80*	3000	0.85				
16	90	86.36	3000	0.95				
17	85	80.96	3000	1.00				
20	76	71.44*	3000	1.10				
22	68	63.33	3000	1.20				
25	73	55.93	3000	1.10				
27	67	51.30*	3000	1.20				
32	58	43.68	3000	1.40				
37	50	37.66	3000	1.55				
40	47	35.10*	3000	1.65				
46	42	30.68	3000	1.85				
49	39	28.76	3000	1.90				
55	35	25.38*	3000	2.1	**S37**			12
62	31	22.50*	3000	2.4	**SF37**			13
71	29	19.89	2840	1.75	**SA37**	-	**DRN71MS4**	12
77	27	18.24*	2780	1.95	**SAF37**			13
90	23	15.53	2680	2.2				
105	20	13.39	2580	2.4				
113	19	12.48*	2530	2.6				
129	16	10.91	2440	2.9				
137	15	10.23	2400	3.0				
156	14	9.02*	2320	3.4				
176	12	8.00*	2240	3.7				
207	10	6.80*	2140	4.1				
222	9.8	6.33	2090	3.6				
261	8.3	5.38	2000	4.1				
289	7.5	4.86*	1940	4.4				
354	6.2	3.97	1820	5.2				
96	21	28.76	2720	3.1				
109	18	25.38*	2630	3.4				
122	16	22.50*	2540	3.5	**S37**			12
139	15	19.89	2390	2.9	**SF37**	-	**DRN63M2**	13
151	14	18.24*	2340	3.1	**SA37**			11
177	12	15.53	2240	3.5	**SAF37**			13
206	10	13.39	2150	3.9				
221	9.8	12.48*	2100	4.1				

P_N = 0.37 kW

n_a min^{-1}	M_a Nm	i	F_{Ra} N	SEW f_B	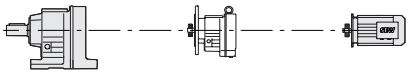			m kg
0.69	2880	2054	23800	1.05				
0.78	2620	1824	27200	1.15	**S87p**			110
0.87	2390	1631	27700	1.25	**SF87p**			130
1.5	1510	930	29200	2.0	**SA87p**	**R57**	**DRN71M4**	105
1.7	1370	831	29300	2.2	**SAF87p**			125
0.69	2780	2054	25800	0.90				
0.78	2470	1824	27600	1.00	**S87**			110
0.87	2210	1631	28100	1.15	**SF87**			130
1.5	1310	930	29400	1.90	**SA87**	**R57**	**DRN71M4**	105
1.7	1180	831	29500	2.1	**SAF87**			125

P_N = 0.37 kW

n_a min^{-1}	M_a Nm	i	F_{Ra} N	SEW f_B	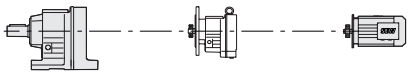			m kg
1.5	1750	954	9580	0.80				
1.7	1540	837	11000	0.95				
2.0	1300	714	12200	1.10	**S77p**			61
2.2	1150	637	13000	1.25	**SF77p**	**R37**	**DRN71M4**	71
2.5	1050	574	13500	1.35	**SA77p**			61
2.8	920	499	14200	1.55	**SAF77p**			67
3.2	820	438	14700	1.75				
3.6	730	389	15100	1.90				
2.0	1280	714	11600	0.95				
2.2	1140	637	12800	1.10	**S77**			61
2.5	1030	574	13600	1.20	**SF77**	**R37**	**DRN71M4**	71
2.8	890	499	14500	1.40	**SA77**			61
3.2	775	438	15000	1.60	**SAF77**			67
3.6	690	389	15400	1.80				
3.0	810	469	8600	0.90				
3.3	740	424	9020	0.95	**S67p**			42
3.9	660	365	9510	1.10	**SF67p**	**R37**	**DRN71M4**	48
4.4	580	319	10000	1.15	**SA67p**			43
5.0	515	281	10400	1.30	**SAF67p**			47
5.8	465	246	10700	1.55				
3.9	610	365	7750	0.95	**S67**			42
4.4	530	319	8570	1.05	**SF67**	**R37**	**DRN71M4**	48
5.0	465	281	9120	1.20	**SA67**			43
5.8	420	246	9450	1.35	**SAF67**			47
3.7	750	256.47	15600	2.0	**S77p**			54
4.2	665	225.26	15700	2.3	**SF77p**	**-**	**DRN80MK6**	64
4.4	635	214.00*	15700	2.4	**SA77p**			54
					SAF77p			60
3.7	620	256.47	15600	2.0	**S77**			54
4.2	555	225.26	15900	2.3	**SF77**	**-**	**DRN80MK6**	64
4.4	530	214.00*	15900	2.4	**SA77**			54
					SAF77			60
4.3	600	217.41	10300	1.05	**S67p**			33
4.9	535	190.11	10700	1.20	**SF67p**	**-**	**DRN80MK6**	40
5.2	510	180.60*	10800	1.25	**SA67p**			34
5.9	455	158.45	11100	1.40	**SAF67p**			39
6.5	415	217.41	11200	1.55				
7.4	370	190.11	11300	1.75	**S67p**			31
7.8	350	180.60*	11300	1.85	**SF67p**	**-**	**DRN71M4**	37
8.9	310	158.45	11400	2.1	**SA67p**			32
11	265	134.40*	11500	2.4	**SAF67p**			36
12	240	121.33	11600	2.7				
4.3	490	217.41	8950	1.15	**S67**			33
4.9	435	190.11	9360	1.30	**SF67**	**-**	**DRN80MK6**	40
5.2	415	180.60*	9490	1.35	**SA67**			34
5.9	370	158.45	9770	1.50	**SAF67**			39
6.5	340	217.41	9940	1.55				
7.4	300	190.11	10100	1.75	**S67**			31
7.8	290	180.60*	10200	1.80	**SF67**	**-**	**DRN71M4**	37
8.9	255	158.45	10300	2.0	**SA67**			32
11	220	134.40*	10400	2.4	**SAF67**			36
12	200	121.33	10500	2.6				

P_N = 0.37 kW

n_a min^{-1}	M_a Nm	i	F_{Ra} N	SEW f_B	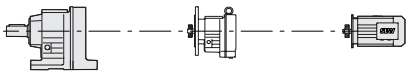			m kg
5.9	435	158.12	1810	0.85				
6.8	380	137.05	6190	0.95	**S57p**			22
7.3	360	128.10*	6470	1.00	**SF57p**	-	**DRN80MK6**	26
8.4	315	110.73	6940	1.15	**SA57p**			22
9.9	270	94.08*	7320	1.35	**SAF57p**			25
11	245	84.00*	7520	1.50				
7.0	370	201.00*	6330	0.95				
7.7	345	184.80*	6640	1.05				
9.0	300	158.12	7090	1.20				
10	265	137.05	7390	1.35				
11	245	128.10*	7510	1.50	**S57p**			20
13	215	110.73	7710	1.70	**SF57p**	-	**DRN71M4**	24
15	184	94.08*	7870	1.90	**SA57p**			20
17	165	84.00*	7960	2.0	**SAF57p**			23
20	142	71.75*	8060	2.3				
20	152	69.39	8020	2.4				
21	133	67.20*	8090	2.3				
22	140	63.80*	8060	2.6				
5.9	345	158.12	6620	0.85				
6.8	305	137.05	7030	0.95	**S57**			22
7.3	290	128.10*	7180	1.00	**SF57**	-	**DRN80MK6**	26
8.4	255	110.73	7450	1.15	**SA57**			22
9.9	220	94.08*	7680	1.35	**SAF57**			25
11	199	84.00*	7800	1.50				
7.0	300	201.00*	7100	1.00				
7.7	275	184.80*	7280	1.05				
9.0	240	158.12	7540	1.20				
10	215	137.05	7720	1.40				
11	200	128.10*	7790	1.45	**S57**			20
13	176	110.73	7910	1.65	**SF57**	-	**DRN71M4**	24
15	153	94.08*	8020	1.95	**SA57**			20
17	138	84.00*	8070	2.1	**SAF57**			23
20	120	71.75*	8130	2.4				
20	135	69.39	8080	1.80				
21	113	67.20*	8150	2.5				
22	125	63.80*	8120	1.95				
11	240	128.10*	3880	0.80				
13	210	110.73	5120	0.95				
15	182	94.08*	5290	1.10				
17	163	84.00*	5380	1.20				
20	140	71.75*	5490	1.40				
20	150	69.39	5400	1.35	**S47p**			16
21	132	67.20*	5530	1.45	**SF47p**	-	**DRN71M4**	20
22	139	63.80*	5460	1.45	**SA47p**			17
26	120	54.59	5470	1.65	**SAF47p**			19
30	104	47.32	5300	1.90				
32	98	44.22*	5220	2.0				
37	85	38.23	5050	2.3				
44	72	32.48*	4850	2.6				
49	65	29.00*	4720	2.8				

P_N = 0.37 kW

n_a min^{-1}	M_a Nm	i	F_{Ra} N	SEW f_B	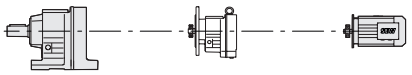			m kg
10	205	137.05	5140	0.80				
11	194	128.10*	5210	0.85				
13	171	110.73	5340	1.00				
15	148	94.08*	5450	1.15				
17	134	84.00*	5520	1.25				
20	116	71.75*	5590	1.45				
20	133	69.39	5480	1.15				
21	110	67.20*	5620	1.50				
22	123	63.80*	5530	1.25	**S47**			16
26	107	54.59	5570	1.45	**SF47**			20
30	93	47.32	5390	1.65	**SA47**	-	**DRN71M4**	17
32	88	44.22*	5300	1.75	**SAF47**			19
37	76	38.23	5110	2.0				
44	66	32.48*	4900	2.4				
49	59	29.00*	4760	2.6				
57	51	24.77	4560	3.1				
61	48	23.20*	4480	3.2				
70	45	20.33	4170	2.5				
80	39	17.62	4020	2.8				
86	36	16.47*	3950	3.0				
22	122	63.33	3000	0.80				
25	121	55.93	3000	0.85				
26	105	53.83	3000	0.90				
28	111	51.30*	3000	0.95				
32	95	43.68	3000	1.10				
38	83	37.66	3000	1.25				
40	77	35.10*	3000	1.35				
46	68	30.68	2970	1.55	**S37p**			13
49	64	28.76	2930	1.65	**SF37p**			15
56	56	25.38*	2870	1.75	**SA37p**	-	**DRN71M4**	13
63	50	22.50*	2810	1.90	**SAF37p**			15
71	46	19.89	2590	1.70				
78	42	18.24*	2560	1.85				
91	36	15.53	2480	2.1				
106	31	13.39	2410	2.4				
113	29	12.48*	2370	2.5				
130	26	10.91	2310	2.9				

P_N = 0.37 kW

n_a min^{-1}	M_a Nm	i	F_{Ra} N	SEW f_B	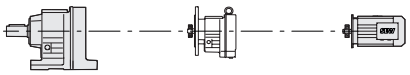			m kg
22	100	63.33	3000	0.80				
28	98	51.30*	3000	0.80				
32	85	43.68	3000	0.95				
38	74	37.66	3000	1.05				
40	69	35.10*	3000	1.15				
46	61	30.68	3000	1.25				
49	57	28.76	3000	1.30				
56	51	25.38*	2930	1.45				
63	46	22.50*	2860	1.60				
71	43	19.89	2620	1.20				
78	40	18.24*	2580	1.30	**S37**			13
91	34	15.53	2500	1.45	**SF37**	-	**DRN71M4**	15
106	29	13.39	2430	1.65	**SA37**			13
113	28	12.48*	2390	1.75	**SAF37**			15
130	24	10.91	2320	2.0				
138	23	10.23	2280	2.1				
157	20	9.02*	2220	2.3				
177	18	8.00*	2150	2.5				
208	15	6.80*	2060	2.8				
223	14	6.33	2010	2.4				
263	12	5.38	1930	2.8				
291	11	4.86*	1880	3.0				
357	9.1	3.97	1770	3.5				
111	27	25.38*	2510	2.3				
125	24	22.50*	2430	2.4				
141	22	19.89	2270	1.95				
154	21	18.24*	2230	2.2	**S37**			12
181	18	15.53	2140	2.4	**SF37**	-	**DRN71MS2**	13
210	15	13.39	2060	2.7	**SA37**			12
225	14	12.48*	2020	2.8	**SAF37**			13
258	12	10.91	1950	3.1				
275	12	10.23	1920	3.3				
311	10	9.02*	1850	3.5				

P_N = 0.55 kW

n_a min^{-1}	M_a Nm	i	F_{Ra} N	SEW f_B	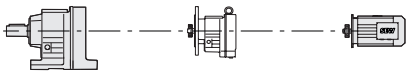			m kg
1.1	3010	1332	19300	1.00				
1.2	2750	1191	26500	1.05				
1.4	2430	1032	27600	1.20				
1.5	2270	930	28000	1.30	**S87p**			110
1.7	2060	831	28300	1.45	**SF87p**	**R57**	**DRN80MK4**	135
2.0	1810	719	28800	1.65	**SA87p**			110
2.3	1580	624	29100	1.90	**SAF87p**			125
2.6	1440	558	29200	2.1				
3.3	1150	435	29600	2.5				
1.1	2700	1332	27000	0.95				
1.2	2440	1191	27600	1.05				
1.4	2120	1032	28200	1.20				
1.5	1960	930	28500	1.25	**S87**			110
1.7	1770	831	28800	1.40	**SF87**	**R57**	**DRN80MK4**	135
2.0	1540	719	29100	1.60	**SA87**			110
2.3	1340	624	29400	1.85	**SAF87**			125
2.6	1220	558	29500	2.1				
3.3	970	435	29700	2.5				

P_N = 0.55 kW

n_a min^{-1}	M_a Nm	i	F_{Ra} N	SEW f_B	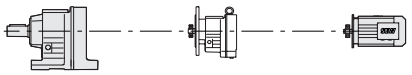			m kg
2.3	1720	637	10100	0.85				
2.5	1570	574	10900	0.90				
2.9	1370	499	11900	1.05	**S77p**			63
3.3	1220	438	12700	1.20	**SF77p**	**R37**	**DRN80MK4**	73
3.7	1090	389	13300	1.30	**SA77p**			63
4.4	930	327	14100	1.50	**SAF77p**			70
5.0	850	289	14600	1.70				
5.7	740	250	15100	1.95				
3.3	1160	438	12700	1.05				
3.7	1030	389	13600	1.20	**S77**			63
4.4	870	327	14500	1.40	**SF77**	**R37**	**DRN80MK4**	73
5.0	790	289	15000	1.55	**SA77**			63
5.7	680	250	15400	1.80	**SAF77**			70
5.1	770	281	8880	0.90				
5.8	695	246	9350	1.05	**S67p**			44
6.5	620	221	9780	1.05	**SF67p**	**R37**	**DRN80MK4**	51
7.3	570	198	10100	1.20	**SA67p**			45
8.6	490	168	10600	1.40	**SAF67p**			50
9.2	460	156	10800	1.40				
5.8	625	246	7560	0.90	**S67**			44
6.5	560	221	8310	1.00	**SF67**	**R37**	**DRN80MK4**	51
7.3	510	198	8760	1.10	**SA67**			45
8.6	435	168	9340	1.30	**SAF67**			50
3.4	1260	288.00*	29400	2.4	**S87p**			99
3.7	1140	258.18	29600	2.6	**SF87p**	-	**DRN90SR6**	120
4.3	990	222.40*	29700	3.0	**SA87p**			96
					SAF87p			110
3.4	1060	288.00*	29600	2.3	**S87**			99
3.7	960	258.18	29700	2.5	**SF87**	-	**DRN90SR6**	120
4.3	840	222.40*	29800	2.9	**SA87**			96
4.8	775	202.96	29900	3.1	**SAF87**			110
3.8	1080	256.47	14200	1.40				
4.3	960	225.26	14700	1.55	**S77p**			63
4.5	920	214.00*	14900	1.65	**SF77p**	-	**DRN90SR6**	72
5.1	820	189.09	15300	1.85	**SA77p**			62
6.0	710	161.60*	15700	2.1	**SAF77p**			69
5.6	755	256.47	15600	2.0	**S77p**			54
6.4	670	225.26	15700	2.3	**SF77p**	-	**DRN80MK4**	64
6.7	635	214.00*	15700	2.4	**SA77p**			54
7.6	565	189.09	15700	2.7	**SAF77p**			60
3.8	900	256.47	14400	1.40				
4.3	800	225.26	14900	1.60	**S77**			63
4.5	765	214.00*	15100	1.65	**SF77**	-	**DRN90SR6**	72
5.1	685	189.09	15400	1.85	**SA77**			62
6.0	595	161.60*	15700	2.1	**SAF77**			69
5.6	630	256.47	15600	2.0	**S77**			54
6.4	560	225.26	15800	2.3	**SF77**	-	**DRN80MK4**	64
6.7	535	214.00*	15900	2.4	**SA77**			54
7.6	480	189.09	16000	2.7	**SAF77**			60

P_N = 0.55 kW

n_a min^{-1}	M_a Nm	i	F_{Ra} N	SEW f_B	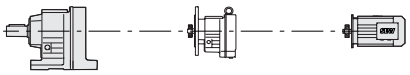			m kg
6.6	610	217.41	10300	1.05				
7.6	540	190.11	10600	1.20				
8.0	515	180.60*	10800	1.25				
9.1	455	158.45	11100	1.40	**S67p**			33
11	390	134.40*	11200	1.65	**SF67p**	-	**DRN80MK4**	40
12	355	121.33	11300	1.80	**SA67p**			34
13	315	106.75*	11400	2.1	**SAF67p**			39
14	295	100.80*	11500	2.2				
17	255	85.83	11600	2.6				
19	245	75.06	11000	2.9				
6.6	500	217.41	8870	1.05				
7.6	440	190.11	9310	1.20				
8.0	425	180.60*	9440	1.25				
9.1	375	158.45	9730	1.40				
11	325	134.40*	10000	1.60	**S67**			33
12	295	121.33	10100	1.75	**SF67**	-	**DRN80MK4**	40
13	265	106.75*	10300	1.95	**SA67**			34
14	250	100.80*	10300	2.1	**SAF67**			39
17	215	85.83	10400	2.4				
19	220	75.06	10400	2.2				
22	194	65.63	10500	2.5				
10	385	137.05	6150	0.95				
11	360	128.10*	6440	1.00				
13	315	110.73	6940	1.15				
15	270	94.08*	7330	1.30				
17	245	84.00*	7530	1.40	**S57p**			22
20	210	71.75*	7750	1.55	**SF57p**	-	**DRN80MK4**	26
21	196	67.20*	7820	1.60	**SA57p**			22
26	177	54.59	7910	2.0	**SAF57p**			25
30	154	47.32	8010	2.2				
32	144	44.22*	8050	2.3				
38	125	38.23	8120	2.6				
44	107	32.48*	7800	2.8				
10	395	94.08*	6060	0.95				
12	355	84.00*	6550	1.05				
13	305	71.75*	7040	1.20				
14	285	67.20*	7200	1.25	**S57p**			30
17	245	56.61	7530	1.40	**SF57p**	-	**DRN90SR6**	34
18	260	54.59	7420	1.45	**SA57p**			30
20	225	47.32	7640	1.65	**SAF57p**			33
22	210	44.22*	7730	1.75				
25	184	38.23	7880	2.0				

P_N = 0.55 kW

n_a min^{-1}	M_a Nm	i	F_{Ra} N	SEW f_B	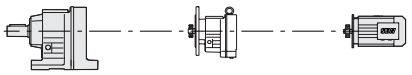			m kg
9.1	355	158.12	6530	0.85				
10	315	137.05	6970	0.95				
11	295	128.10*	7130	1.00				
13	260	110.73	7420	1.15				
15	225	94.08*	7650	1.30				
17	200	84.00*	7780	1.45				
20	176	71.75*	7920	1.65				
21	166	67.20*	7960	1.70	**S57**			22
26	159	54.59	7990	1.55	**SF57**	-	**DRN80MK4**	26
30	139	47.32	8070	1.75	**SA57**			22
32	130	44.22*	8100	1.90	**SAF57**			25
38	114	38.23	8150	2.2				
44	97	32.48*	7860	2.5				
49	88	29.00*	7610	2.8				
58	75	24.77	7280	3.3				
62	71	23.20*	7150	3.5				
71	66	20.33	6690	2.6				
10	320	94.08*	6920	0.95				
12	290	84.00*	7190	1.00				
13	250	71.75*	7480	1.20	**S57**			30
14	235	67.20*	7580	1.25	**SF57**	-	**DRN90SR6**	34
18	230	54.59	7620	1.20	**SA57**			30
20	200	47.32	7790	1.35	**SAF57**			33
22	189	44.22*	7850	1.45				
25	165	38.23	7970	1.65				
17	240	84.00*	4180	0.85				
20	205	71.75*	5150	0.95				
21	193	67.20*	5220	1.00				
21	220	69.39	4950	0.90				
22	205	63.80*	5050	1.00				
26	176	54.59	4950	1.15				
30	153	47.32	4850	1.30	**S47p**			19
32	143	44.22*	4790	1.40	**SF47p**	-	**DRN80MK4**	22
38	125	38.23	4670	1.55	**SA47p**			20
44	106	32.48*	4530	1.75	**SAF47p**			21
49	95	29.00*	4430	1.90				
58	81	24.77	4280	2.1				
62	76	23.20*	4210	2.2				
71	70	20.33	3880	2.3				
81	61	17.62	3770	2.6				
87	57	16.47*	3710	2.7				

P_N = 0.55 kW

n_a min^{-1}	M_a Nm	i	F_{Ra} N	SEW f_B	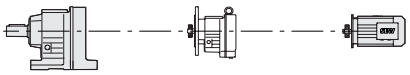			m kg
17	197	84.00*	5200	0.85				
20	171	71.75*	5340	1.00				
21	161	67.20*	5390	1.05				
26	156	54.59	5090	1.00				
30	137	47.32	4970	1.15				
32	129	44.22*	4910	1.20				
38	112	38.23	4770	1.40				
44	96	32.48*	4610	1.60	**S47**			19
49	87	29.00*	4490	1.80	**SF47**	-	**DRN80MK4**	22
58	75	24.77	4330	2.1	**SA47**			20
62	70	23.20*	4260	2.2	**SAF47**			21
71	65	20.33	3910	1.70				
81	57	17.62	3790	1.95				
87	53	16.47*	3730	2.1				
101	46	14.24	3610	2.4				
119	40	12.10*	3470	2.8				
133	36	10.80*	3370	3.1				
156	30	9.23*	3240	3.6				
38	121	37.66	2560	0.85				
41	113	35.10*	2570	0.95				
47	100	30.68	2560	1.05				
50	94	28.76	2560	1.10				
57	83	25.38*	2540	1.20				
64	74	22.50*	2510	1.30				
72	68	19.89	2260	1.15				
75	63	19.13*	2460	1.40				
79	62	18.24*	2250	1.25	**S37p**			16
92	53	15.53	2220	1.45	**SF37p**	-	**DRN80MK4**	17
107	46	13.39	2180	1.65	**SA37p**			15
115	43	12.48*	2160	1.70	**SAF37p**			17
132	38	10.91	2120	1.95				
140	35	10.23	2090	2.1				
159	31	9.02*	2050	2.3				
179	28	8.00*	2000	2.4				
211	24	6.80*	1940	2.6				
227	22	6.33	1890	2.6				
267	19	5.38	1820	2.7				
295	17	4.86*	1780	2.8				
98	48	28.76	2360	1.60				
111	42	25.38*	2310	1.75				
126	38	22.50*	2260	1.90				
142	35	19.89	2090	2.1				
155	32	18.24*	2060	2.2	**S37p**			13
182	27	15.53	2000	2.5	**SF37p**	-	**DRN71M2**	15
211	24	13.39	1940	2.6	**SA37p**			13
226	22	12.48*	1910	2.6	**SAF37p**			15
276	18	10.23	1820	3.0				
313	16	9.02*	1770	2.9				
353	14	8.00*	1710	2.8				
415	12	6.80*	1640	2.6				

P_N = 0.55 kW

n_a min^{-1}	M_a Nm	i	F_{Ra} N	SEW f_B	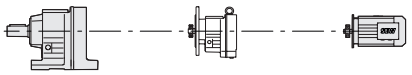			m kg
47	90	30.68	2670	0.85				
50	84	28.76	2660	0.90				
57	75	25.38*	2620	1.00				
64	67	22.50*	2580	1.10				
75	57	19.13*	2520	1.25				
92	50	15.53	2250	1.00				
107	43	13.39	2210	1.15				
115	40	12.48*	2180	1.20	**S37**			16
132	35	10.91	2140	1.35	**SF37**	-	**DRN80MK4**	17
140	33	10.23	2110	1.40	**SA37**			15
159	30	9.02*	2060	1.55	**SAF37**			17
179	26	8.00*	2010	1.70				
211	22	6.80*	1950	1.90				
227	21	6.33	1900	1.65				
267	18	5.38	1830	1.90				
295	16	4.86*	1790	2.0				
362	13	3.97	1700	2.4				
98	44	28.76	2400	1.45				
111	39	25.38*	2340	1.55				
126	35	22.50*	2290	1.60				
142	33	19.89	2110	1.35				
155	30	18.24*	2070	1.45				
182	26	15.53	2010	1.60	**S37**			13
211	22	13.39	1950	1.85	**SF37**	-	**DRN71M2**	15
226	21	12.48*	1920	1.90	**SA37**			13
259	18	10.91	1860	2.1	**SAF37**			15
276	17	10.23	1830	2.2				
313	15	9.02*	1770	2.4				
353	14	8.00*	1720	2.6				
415	12	6.80*	1650	2.5				

P_N = 0.75 kW

n_a min^{-1}	M_a Nm	i	F_{Ra} N	SEW f_B	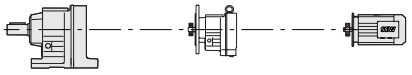			m kg
1.2	4750	1223	23200	0.90				
1.4	4170	1070	32100	1.05				
1.6	3590	928	34000	1.20	**S97p**			175
1.8	3210	824	34600	1.35	**SF97p**	**R57**	**DRN80M4**	210
2.0	2630	714	35500	1.65	**SA97p**			170
2.3	2490	626	35600	1.75	**SAF97p**			195
2.7	2150	538	36000	2.0				
3.0	1950	484	36200	2.2				
1.2	4700	1223	24000	0.90				
1.4	4120	1070	32700	1.00				
1.6	3550	928	34100	1.20	**S97**			175
1.8	3130	824	34800	1.35	**SF97**	**R57**	**DRN80M4**	210
2.0	2240	714	35900	1.90	**SA97**			170
2.3	2380	626	35800	1.75	**SAF97**			195
2.7	2040	538	36100	2.1				
3.0	1850	484	36300	2.3				

P_N = 0.75 kW

n_a min^{-1}	M_a Nm	i	F_{Ra} N	SEW f_B	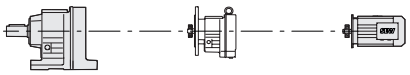			m kg
1.6	3120	930	14500	0.95				
1.7	2840	831	24900	1.05				
2.0	2490	719	27500	1.20	**S87p**			115
2.3	2190	624	28100	1.35	**SF87p**	**R57**	**DRN80M4**	135
2.6	1990	558	28500	1.50	**SA87p**			115
3.3	1590	435	29100	1.80	**SAF87p**			130
4.5	1210	323	29500	2.4				
1.4	2940	1032	22000	0.85				
1.6	2700	930	27000	0.90				
1.7	2440	831	27600	1.00	**S87**			115
2.0	2130	719	28200	1.15	**SF87**	**R57**	**DRN80M4**	135
2.3	1860	624	28700	1.35	**SA87**			115
2.6	1680	558	28900	1.50	**SAF87**			130
3.3	1350	435	29400	1.80				
4.5	1030	323	29700	2.3				
3.3	1680	438	10400	0.85				
3.7	1500	389	11300	0.95	**S77p**			67
4.4	1280	327	12400	1.10	**SF77p**	**R37**	**DRN80M4**	77
5.0	1160	289	13000	1.25	**SA77p**			66
5.8	1010	250	13800	1.40	**SAF77p**			73
6.6	900	219	14400	1.60				
4.4	1200	327	12300	1.05	**S77**			67
5.0	1080	289	13300	1.15	**SF77**	**R37**	**DRN80M4**	77
5.8	940	250	14200	1.35	**SA77**			66
6.6	830	219	14800	1.50	**SAF77**			73
3.3	1730	288.00*	28900	1.70	**S87p**			99
3.7	1560	258.18	29100	1.90	**SF87p**	-	**DRN90S6**	120
4.3	1360	222.40*	29300	2.2	**SA87p**			96
4.7	1250	202.96	29500	2.4	**SAF87p**			110
					S87p			94
5.0	1180	288.00*	29500	2.5	**SF87p**	-	**DRN80M4**	115
5.6	1070	258.18	29600	2.7	**SA87p**			91
					SAF87p			105
3.3	1460	288.00*	29200	1.70	**S87**			99
3.7	1320	258.18	29400	1.85	**SF87**	-	**DRN90S6**	120
4.3	1160	222.40*	29500	2.1	**SA87**			96
4.7	1060	202.96	29600	2.2	**SAF87**			110
5.0	1010	288.00*	29700	2.3	**S87**			94
5.6	910	258.18	29800	2.5	**SF87**	-	**DRN80M4**	115
6.5	800	222.40*	29800	2.9	**SA87**			91
7.1	735	202.96	29900	3.1	**SAF87**			105
3.7	1480	256.47	12500	1.00				
4.3	1320	225.26	13100	1.15	**S77p**			63
4.5	1260	214.00*	13400	1.20	**SF77p**	-	**DRN90S6**	72
5.1	1130	189.09	14000	1.35	**SA77p**			62
5.9	970	161.60*	14600	1.55	**SAF77p**			69
5.6	1020	256.47	14400	1.45				
6.4	910	225.26	14900	1.65				
6.7	870	214.00*	15100	1.75	**S77p**			58
7.6	770	189.09	15500	1.95	**SF77p**	-	**DRN80M4**	67
8.9	660	161.60*	15700	2.3	**SA77p**			57
9.7	610	148.15	15700	2.5	**SAF77p**			64
11	535	130.00*	15700	2.8				
12	510	123.20*	15700	2.9				

P_N = 0.75 kW

n_a min^{-1}	M_a Nm	i	F_{Ra} N	SEW f_B	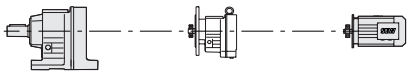			m kg
4.3	1100	225.26	13100	1.15	**S77**	-	**DRN90S6**	63
4.5	1050	214.00*	13500	1.20	**SF77**			72
5.1	940	189.09	14200	1.35	**SA77**			62
5.9	820	161.60*	14800	1.55	**SAF77**			69
5.6	860	256.47	14600	1.50				
6.4	760	225.26	15100	1.65				
6.7	730	214.00*	15200	1.75				
7.6	650	189.09	15500	1.95	**S77**	-	**DRN80M4**	58
8.9	565	161.60*	15800	2.2	**SF77**			67
9.7	520	148.15	16000	2.4	**SA77**			57
11	465	130.00*	16000	2.6	**SAF77**			64
12	440	123.20*	16000	2.7				
13	390	107.83	16000	3.0				
7.6	735	190.11	9630	0.85				
8.0	700	180.60*	9810	0.90				
9.1	620	158.45	10200	1.05				
11	530	134.40*	10700	1.20				
12	480	121.33	11000	1.35	**S67p**	-	**DRN80M4**	37
13	425	106.75*	11200	1.50	**SF67p**			43
14	405	100.80*	11200	1.60	**SA67p**			38
17	345	85.83	11200	1.90	**SAF67p**			42
19	335	75.06	10500	2.2				
22	290	65.63	10200	2.5				
23	280	62.35*	10100	2.6				
26	245	54.70	9770	2.9				
7.6	600	190.11	7850	0.85				
8.0	575	180.60*	8140	0.90				
9.1	510	158.45	8750	1.00				
11	440	134.40*	9310	1.20				
12	405	121.33	9570	1.30				
13	360	106.75*	9830	1.45	**S67**	-	**DRN80M4**	37
14	340	100.80*	9930	1.50	**SF67**			43
17	295	85.83	10100	1.75	**SA67**			38
19	300	75.06	10100	1.60	**SAF67**			42
22	265	65.63	10300	1.80				
23	250	62.35*	10300	1.90				
26	220	54.70	10200	2.2				
31	190	46.40*	9740	2.5				
13	420	71.75*	4420	0.90				
14	395	67.20*	6040	0.90				
17	335	56.61	6750	1.00	**S57p**	-	**DRN90S6**	30
18	355	54.59	6520	1.05	**SF57p**			34
20	310	47.32	6990	1.20	**SA57p**			30
22	290	44.22*	7160	1.25	**SAF57p**			33
25	255	38.23	7460	1.45				

P_N = 0.75 kW

n_a min^{-1}	M_a Nm	i	F_{Ra} N	SEW f_B	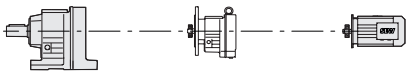			m kg
13	430	110.73	2770	0.85	**S57p** **SF57p** **SA57p** **SAF57p**	-	**DRN80M4**	26
15	370	94.08*	6380	0.95				
17	330	84.00*	6800	1.00				
20	285	71.75*	7230	1.15				
21	265	67.20*	7370	1.15				
25	225	56.61	7650	1.30				
26	240	54.59	7550	1.50				30
30	210	47.32	7740	1.65				
33	196	44.22*	7810	1.70				26
38	170	38.23	7810	1.90				
44	145	32.48*	7520	2.1				28
50	130	29.00*	7310	2.2				
58	111	24.77	7020	2.5				
62	104	23.20*	6900	2.6				
71	95	20.33	6430	2.4				
82	82	17.62	6200	2.7				
87	77	16.47*	6100	2.9				
13	345	71.75*	6650	0.85	**S57** **SF57** **SA57** **SAF57**	-	**DRN90S6**	30
14	325	67.20*	6850	0.90				
17	280	56.61	7270	1.10				34
20	275	47.32	7280	1.00				30
22	260	44.22*	7410	1.05				33
13	350	110.73	6560	0.85	**S57** **SF57** **SA57** **SAF57**	-	**DRN80M4**	26
15	305	94.08*	7040	0.95				
17	275	84.00*	7290	1.05				30
20	240	71.75*	7560	1.20				
21	225	67.20*	7650	1.25				26
26	215	54.59	7700	1.15				
30	189	47.32	7850	1.30				28
33	177	44.22*	7910	1.40				
38	155	38.23	7910	1.60				
44	132	32.48*	7590	1.85				
50	119	29.00*	7370	2.1				
58	102	24.77	7070	2.4				
62	96	23.20*	6950	2.6				
71	89	20.33	6450	1.90				
82	78	17.62	6230	2.2				
87	73	16.47*	6120	2.3				
101	63	14.24	5890	2.7				
26	240	54.59	4250	0.85	**S47p** **SF47p** **SA47p** **SAF47p**	-	**DRN80M4**	22
30	210	47.32	4360	0.95				
33	195	44.22*	4340	1.05				26
38	169	38.23	4280	1.15				
44	144	32.48*	4190	1.30				23
50	129	29.00*	4120	1.40				
58	111	24.77	4020	1.55				25
62	104	23.20*	3970	1.60				
71	95	20.33	3590	1.70				
82	82	17.62	3520	1.90				
87	77	16.47*	3480	2.0				
101	67	14.24	3390	2.3				
119	57	12.10*	3280	2.6				
133	51	10.80*	3210	2.8				

P_N = 0.75 kW

n_a min^{-1}	M_a Nm	i	F_{Ra} N	SEW f_B	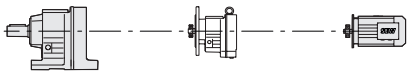			m kg
30	186	47.32	4520	0.85				
33	175	44.22*	4490	0.90				
38	153	38.23	4400	1.00				
44	131	32.48*	4290	1.20				
50	118	29.00*	4210	1.30				
58	101	24.77	4090	1.55				
62	95	23.20*	4030	1.60				
71	89	20.33	3630	1.25				
82	77	17.62	3550	1.40	**S47**			22
87	73	16.47*	3510	1.50	**SF47**	-	**DRN80M4**	26
101	63	14.24	3410	1.75	**SA47**			23
119	54	12.10*	3300	2.0	**SAF47**			25
133	48	10.80*	3220	2.3				
156	41	9.23*	3110	2.6				
167	39	8.64*	3060	2.8				
198	33	7.28	2940	3.1				
225	29	6.40*	2830	2.6				
267	25	5.39	2700	3.0				
302	22	4.76	2620	3.3				
360	18	4.00*	2500	3.3				
50	127	28.76	2140	0.85				
57	113	25.38*	2170	0.90				
64	100	22.50*	2180	0.95				
75	85	19.13*	2180	1.05				
93	72	15.53	1930	1.05				
108	62	13.39	1930	1.20				
115	58	12.48*	1930	1.25	**S37p**			19
132	51	10.91	1910	1.45	**SF37p**	-	**DRN80M4**	20
141	48	10.23	1900	1.50	**SA37p**			19
160	42	9.02*	1880	1.65	**SAF37p**			20
180	38	8.00*	1850	1.75				
212	32	6.80*	1810	1.90				
227	30	6.33	1760	1.85				
267	25	5.38	1720	2.0				
296	23	4.86*	1680	2.1				
363	19	3.97	1620	2.4				
51	125	55.93	2150	0.85				
56	115	51.30*	2170	0.85				
65	98	43.68	2190	0.95				
76	85	37.66	2180	1.05				
81	79	35.10*	2180	1.10				
93	69	30.68	2160	1.15				
99	65	28.76	2150	1.20				
112	57	25.38*	2120	1.30	**S37p**			19
127	51	22.50*	2090	1.40	**SF37p**	-	**DRN80MS2**	20
149	43	19.13*	2040	1.35	**SA37p**			19
184	37	15.53	1850	1.85	**SAF37p**			20
213	32	13.39	1810	1.90				
229	30	12.48*	1780	1.95				
262	26	10.91	1740	2.2				
279	24	10.23	1720	2.2				
316	21	9.02*	1680	2.2				
357	19	8.00*	1640	2.1				
420	16	6.80*	1580	1.90				

P_N = 0.75 kW

n_a min^{-1}	M_a Nm	i	F_{Ra} N	SEW f_B	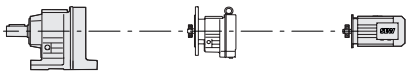			m kg
75	78	19.13*	2260	0.90	**S37** **SF37** **SA37** **SAF37**	-	**DRN80M4**	19
115	55	12.48*	1960	0.85				20
132	48	10.91	1940	1.00				19
141	45	10.23	1930	1.05				20
160	40	9.02*	1900	1.15				
180	36	8.00*	1870	1.25				
212	31	6.80*	1820	1.40				
227	29	6.33	1780	1.20				
267	24	5.38	1730	1.40				
296	22	4.86*	1690	1.50				
363	18	3.97	1620	1.75				
149	41	19.13*	2070	1.10	**S37** **SF37** **SA37** **SAF37**	-	**DRN80MS2**	19
184	35	15.53	1860	1.20				20
213	30	13.39	1820	1.35				19
229	28	12.48*	1800	1.40				20
262	25	10.91	1750	1.55				
279	23	10.23	1730	1.65				
316	21	9.02*	1690	1.75				
357	18	8.00*	1640	1.90				
420	16	6.80*	1580	1.85				

P_N = 1.1 kW

n_a min^{-1}	M_a Nm	i	F_{Ra} N	SEW f_B	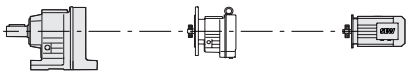			m kg
1.8	4710	824	24000	0.90	**S97p** **SF97p** **SA97p** **SAF97p**	**R57**	**DRN90S4**	180
2.0	3860	714	33500	1.10				215
2.3	3660	626	33900	1.20				175
2.7	3160	538	34700	1.35				200
3.0	2870	484	35100	1.50				
3.5	2510	420	35600	1.70				
1.8	4590	824	25600	0.90	**S97** **SF97** **SA97** **SAF97**	**R57**	**DRN90S4**	180
2.0	3290	714	34500	1.30				215
2.3	3490	626	34200	1.20				175
2.7	3010	538	34900	1.40				200
3.0	2720	484	35400	1.55				
3.5	2360	420	35800	1.80				
2.3	3230	624	5620	0.95	**S87p** **SF87p** **SA87p** **SAF87p**	**R57**	**DRN90S4**	120
2.6	2930	558	22200	1.00				145
3.0	2580	485	27300	1.15				120
3.4	2350	435	27800	1.25				135
3.9	2060	378	28300	1.40				
4.5	1790	323	28800	1.60				
5.2	1560	281	29100	1.85				
5.7	1530	255	29100	1.70				
6.6	1340	222	29300	2.0				
7.1	1260	205	29400	2.1				

P_N = 1.1 kW

n_a min^{-1}	M_a Nm	i	F_{Ra} N	SEW f_B			m kg
2.3	2740	624	26500	0.90			
2.6	2480	558	27500	1.00			
3.0	2180	485	28100	1.15			
3.4	1980	435	28500	1.25	**S87**		120
3.9	1740	378	28800	1.40	**SF87**		145
4.5	1520	323	29100	1.60	**SA87**	**R57** **DRN90S4**	120
5.2	1330	281	29400	1.80	**SAF87**		135
5.7	1420	255	29200	1.40			
6.6	1250	222	29400	1.60			
7.1	1170	205	29500	1.70			
5.0	1700	289	10400	0.85	**S77p**		73
5.8	1480	250	11500	0.95	**SF77p**		82
6.6	1310	219	12300	1.10	**SA77p**	**R37** **DRN90S4**	72
					SAF77p		79
6.6	1210	219	12200	1.05	**S77**		73
					SF77		82
					SA77	**R37** **DRN90S4**	72
					SAF77		79
3.3	2600	286.40*	35500	1.65	**S97p**		160
3.7	2400	262.22	35700	1.80	**SF97p**		195
4.1	2130	231.67	36000	2.0	**SA97p**	**-** **DRN90L6**	155
					SAF97p		180
3.3	2230	286.40*	35900	1.90	**S97**		160
3.7	2060	262.22	36100	2.0	**SF97**		195
4.1	1840	231.67	36300	2.3	**SA97**	**-** **DRN90L6**	155
					SAF97		180
3.3	2530	288.00*	27400	1.15	**S87p**		100
3.7	2290	258.18	27900	1.30	**SF87p**		125
4.3	2000	222.40*	28400	1.50	**SA87p**	**-** **DRN90L6**	99
4.7	1830	202.96	28700	1.60	**SAF87p**		115
5.1	1720	288.00*	28900	1.70			
5.6	1550	258.18	29100	1.90	**S87p**		99
6.5	1350	222.40*	29400	2.1	**SF87p**		120
7.2	1230	202.96	29500	2.3	**SA87p**	**-** **DRN90S4**	96
8.1	1100	180.00*	29600	2.5	**SAF87p**		110
9.6	930	151.30	29700	2.9			
3.7	1940	258.18	28500	1.25	**S87**		100
4.3	1690	222.40*	28900	1.40	**SF87**		125
4.7	1560	202.96	29100	1.55	**SA87**	**-** **DRN90L6**	99
					SAF87		115
5.1	1470	288.00*	29200	1.55			
5.6	1330	258.18	29400	1.70	**S87**		99
6.5	1160	222.40*	29500	1.95	**SF87**		120
7.2	1070	202.96	29600	2.1	**SA87**	**-** **DRN90S4**	96
8.1	950	180.00*	29700	2.3	**SAF87**		110
9.6	810	151.30	29800	2.6			

P_N = 1.1 kW

n_a min^{-1}	M_a Nm	i	F_{Ra} N	SEW f_B	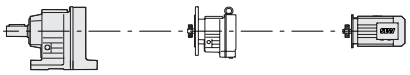			m kg
5.7	1490	256.47	12500	1.00				
6.5	1320	225.26	13200	1.15				
6.8	1260	214.00*	13400	1.20				
7.7	1120	189.09	14000	1.35				
9.0	960	161.60*	14700	1.55	**S77p**			63
9.8	880	148.15	15000	1.70	**SF77p**	-	**DRN90S4**	72
11	780	130.00*	15500	1.90	**SA77p**			62
12	740	123.20*	15600	2.0	**SAF77p**			69
13	650	107.83	15700	2.3				
15	585	97.14	15700	2.5				
17	515	85.22	15400	2.7				
6.5	1110	225.26	13100	1.15				
6.8	1060	214.00*	13400	1.20				
7.7	950	189.09	14100	1.35				
9.0	820	161.60*	14800	1.55	**S77**			63
9.8	760	148.15	15100	1.65	**SF77**	-	**DRN90S4**	72
11	675	130.00*	15500	1.80	**SA77**			62
12	640	123.20*	15600	1.85	**SAF77**			69
13	565	107.83	15800	2.1				
15	515	97.14	16000	2.2				
17	455	85.22	16000	2.4				
11	770	134.40*	9440	0.85				
12	700	121.33	9820	0.90				
14	585	100.80*	10400	1.10				
14	620	106.75*	10200	1.05				
17	500	85.83	10400	1.30				
19	455	78.00*	10200	1.45	**S67p**			43
19	485	75.06	9570	1.50	**SF67p**	-	**DRN90S4**	50
22	425	65.63	9380	1.70	**SA67p**			44
23	405	62.35*	9300	1.80	**SAF67p**			48
27	355	54.70	9090	2.0				
31	300	46.40*	8800	2.3				
35	275	41.89	8620	2.5				
39	240	36.85	8380	2.7				
42	230	34.80*	8270	2.8				
12	585	121.33	8020	0.90				
14	495	100.80*	8890	1.05				
14	520	106.75*	8660	1.00				
17	430	85.83	9400	1.20				
19	390	78.00*	9640	1.30				
22	385	65.63	9690	1.25	**S67**			43
23	365	62.35*	9750	1.30	**SF67**	-	**DRN90S4**	50
27	325	54.70	9500	1.50	**SA67**			44
31	275	46.40*	9170	1.75	**SAF67**			48
35	250	41.89	8970	1.90				
39	220	36.85	8700	2.2				
42	210	34.80*	8590	2.3				
49	180	29.63	8260	2.7				

P_N = 1.1 kW

n_a min^{-1}	M_a Nm	i	F_{Ra} N	SEW f_B	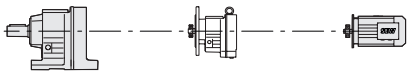			m kg
20	410	71.75*	5330	0.80				
22	385	67.20*	6140	0.80				
26	325	56.61	6830	0.90				
27	350	54.59	6590	1.05				
31	305	47.32	7050	1.15				
33	285	44.22*	7220	1.20				
38	245	38.23	7230	1.30	**S57p**			32
45	210	32.48*	7010	1.45	**SF57p**			35
50	188	29.00*	6860	1.55	**SA57p**	-	**DRN90S4**	31
59	161	24.77	6630	1.70	**SAF57p**			34
63	151	23.20*	6540	1.80				
74	127	19.54	6290	1.95				
83	120	17.62	5830	1.90				
88	112	16.47*	5750	2.0				
102	97	14.24	5570	2.3				
120	82	12.10*	5360	2.7				
20	345	71.75*	6620	0.85				
22	325	67.20*	6830	0.85				
26	280	56.61	7260	0.95				
31	275	47.32	7300	0.90				
33	255	44.22*	7430	0.95				
38	225	38.23	7360	1.10				
45	192	32.48*	7120	1.25				
50	173	29.00*	6950	1.40	**S57**			32
59	149	24.77	6710	1.65	**SF57**			35
63	140	23.20*	6610	1.75	**SA57**	-	**DRN90S4**	31
74	119	19.54	6340	1.80	**SAF57**			34
83	113	17.62	5860	1.50				
88	106	16.47*	5780	1.60				
102	92	14.24	5590	1.85				
120	78	12.10*	5380	2.2				
135	70	10.80*	5230	2.4				
158	60	9.23*	5030	2.8				
45	210	32.48*	3600	0.90				
50	188	29.00*	3590	0.95				
59	161	24.77	3560	1.05				
63	151	23.20*	3540	1.10				
72	138	20.33	3090	1.15				
74	127	19.54	3480	1.25				
83	120	17.62	3080	1.30				
88	112	16.47*	3070	1.40	**S47p**			28
102	97	14.24	3030	1.55	**SF47p**	-	**DRN90S4**	32
120	82	12.10*	2980	1.75	**SA47p**			29
135	74	10.80*	2930	1.95	**SAF47p**			31
158	63	9.23*	2860	2.1				
168	59	8.64*	2830	2.2				
200	50	7.28	2740	2.2				
227	44	6.40*	2650	2.7				
270	37	5.39	2550	2.8				
306	33	4.76	2480	2.8				
364	28	4.00*	2380	2.7				

P_N = 1.1 kW

n_a min^{-1}	M_a Nm	i	F_{Ra} N	SEW f_B	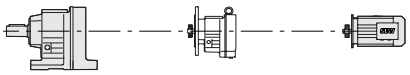			m kg
50	171	29.00*	3720	0.90				
59	147	24.77	3660	1.05				
63	138	23.20*	3630	1.10				
74	117	19.54	3550	1.25				
83	113	17.62	3120	1.00				
88	105	16.47*	3110	1.05				
102	92	14.24	3070	1.20	**S47**			28
120	78	12.10*	3010	1.40	**SF47**			32
135	70	10.80*	2960	1.55	**SA47**	-	**DRN90S4**	29
158	60	9.23*	2880	1.80	**SAF47**			31
168	56	8.64*	2850	1.95				
200	48	7.28	2750	2.2				
227	42	6.40*	2660	1.80				
270	36	5.39	2560	2.1				
306	32	4.76	2490	2.3				
364	27	4.00*	2390	2.3				
99	95	28.76	1780	0.80				
113	84	25.38*	1800	0.90				
127	74	22.50*	1800	0.95				
150	63	19.13*	1790	0.90				
184	54	15.53	1590	1.25				
214	46	13.39	1590	1.30	**S37p**			19
229	43	12.48*	1580	1.35	**SF37p**	-	**DRN80M2**	20
262	38	10.91	1560	1.55	**SA37p**			19
280	36	10.23	1550	1.50	**SAF37p**			20
317	31	9.02*	1530	1.45				
358	28	8.00*	1500	1.40				
421	24	6.80*	1460	1.30				
721	14	3.97	1300	1.45				
109	91	13.39	960	0.85				
117	85	12.48*	1080	0.85				
133	74	10.91	1280	1.00				
142	70	10.23	1360	1.05				
161	61	9.02*	1500	1.15	**S37p**			25
182	55	8.00*	1590	1.20	**SF37p**	-	**DRN90S4**	26
214	46	6.80*	1590	1.30	**SA37p**			25
230	43	6.33	1550	1.30	**SAF37p**			26
270	37	5.38	1530	1.40				
299	33	4.86*	1520	1.45				
367	27	3.97	1480	1.60				
182	52	8.00*	1620	0.85				
214	44	6.80*	1610	0.95	**S37**			25
230	42	6.33	1570	0.85	**SF37**	-	**DRN90S4**	26
270	35	5.38	1550	0.95	**SA37**			25
299	32	4.86*	1530	1.05	**SAF37**			26
367	26	3.97	1490	1.20				
214	44	13.39	1610	0.90				
229	41	12.48*	1600	0.95				
262	36	10.91	1580	1.05	**S37**			19
280	34	10.23	1570	1.10	**SF37**	-	**DRN80M2**	20
317	30	9.02*	1540	1.20	**SA37**			19
358	27	8.00*	1510	1.30	**SAF37**			20
421	23	6.80*	1470	1.25				

P_N = 1.5 kW

n_a min^{-1}	M_a Nm	i	F_{Ra} N	SEW f_B	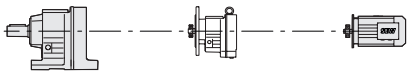			m kg
2.3	5000	626	12800	0.85				
2.7	4330	538	30000	1.00	**S97p**			185
3.0	3930	484	33300	1.10	**SF97p**	**R57**	**DRN90L4**	220
3.5	3430	420	34300	1.25	**SA97p**			180
3.9	3110	376	34800	1.40	**SAF97p**			205
4.5	2740	327	35300	1.55				
2.1	4490	714	30600	0.95				
2.3	4780	626	22600	0.90				
2.7	4110	538	32800	1.00	**S97**			185
3.0	3720	484	33700	1.15	**SF97**	**R57**	**DRN90L4**	220
3.5	3230	420	34600	1.30	**SA97**			180
3.9	2920	376	35100	1.45	**SAF97**			205
4.5	2560	327	35500	1.65				
3.4	3220	435	7490	0.90				
3.9	2830	378	25300	1.05				
4.5	2450	323	27600	1.20	**S87p**			125
5.2	2140	281	28200	1.35	**SF87p**	**R57**	**DRN90L4**	145
5.7	2100	255	28200	1.25	**SA87p**			125
6.6	1840	222	28700	1.45	**SAF87p**			140
7.1	1720	205	28800	1.50				
3.0	2990	485	20100	0.85				
3.4	2720	435	27000	0.90				
3.9	2390	378	27700	1.00	**S87**			125
4.5	2080	323	28300	1.15	**SF87**	**R57**	**DRN90L4**	145
5.2	1830	281	28700	1.30	**SA87**			125
5.7	1950	255	28500	1.00	**SAF87**			140
6.6	1710	222	28900	1.15				
7.1	1600	205	29000	1.25				
3.4	3540	286.40*	34100	1.20	**S97p**			170
3.7	3260	262.22	34600	1.30	**SF97p**	-	**DRN100L6**	205
4.2	2900	231.67	35100	1.50	**SA97p**			165
4.9	2480	196.52	35700	1.75	**SAF97p**			195
5.1	2380	286.40*	35800	1.80	**S97p**			160
5.6	2180	262.22	36000	1.95	**SF97p**	-	**DRN90L4**	195
6.3	1940	231.67	36200	2.2	**SA97p**			155
7.4	1650	196.52	36500	2.6	**SAF97p**			180
3.4	3030	286.40*	34900	1.40	**S97**			170
3.7	2790	262.22	35300	1.50	**SF97**	-	**DRN100L6**	205
4.2	2490	231.67	35600	1.70	**SA97**			165
4.9	2150	196.52	36000	1.95	**SAF97**			195
5.1	2060	286.40*	36100	1.95	**S97**			160
5.6	1900	262.22	36300	2.1	**SF97**	-	**DRN90L4**	195
6.3	1700	231.67	36400	2.4	**SA97**			155
7.4	1460	196.52	36600	2.7	**SAF97**			180
3.7	3110	258.18	14800	0.95	**S87p**			115
4.3	2710	222.40*	27000	1.10	**SF87p**	-	**DRN100L6**	135
4.7	2490	202.96	27500	1.20	**SA87p**			110
5.3	2230	180.00*	28000	1.30	**SAF87p**			125

P_N = 1.5 kW

n_a min^{-1}	M_a Nm	i	F_{Ra} N	SEW f_B	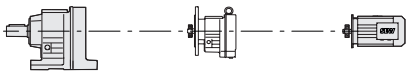			m kg
5.1	2340	288.00*	27800	1.25				
5.7	2110	258.18	28300	1.40				
6.6	1830	222.40*	28700	1.55				
7.2	1670	202.96	28900	1.70	**S87p**			100
8.1	1490	180.00*	29200	1.85	**SF87p**	-	**DRN90L4**	125
9.7	1260	151.30	29400	2.1	**SA87p**			99
11	1160	139.05	29500	2.3	**SAF87p**			115
12	1030	123.48	29700	2.5				
13	930	110.40*	29800	2.7				
15	830	99.26	29800	2.9				
3.7	2630	258.18	27200	0.90	**S87**			115
4.3	2300	222.40*	27900	1.05	**SF87**	-	**DRN100L6**	135
4.7	2120	202.96	28200	1.10	**SA87**			110
5.3	1900	180.00*	28600	1.25	**SAF87**			125
5.1	1990	288.00*	28500	1.15				
5.7	1800	258.18	28800	1.25				
6.6	1570	222.40*	29100	1.45				
7.2	1450	202.96	29200	1.55	**S87**			100
8.1	1300	180.00*	29400	1.70	**SF87**	-	**DRN90L4**	125
9.7	1110	151.30	29600	1.95	**SA87**			99
11	1020	139.05	29700	2.1	**SAF87**			115
12	920	123.48	29800	2.3				
13	820	110.40*	29800	2.4				
15	745	99.26	29900	2.6				
6.5	1790	225.26	11200	0.85				
6.8	1710	214.00*	11500	0.90				
7.7	1520	189.09	12300	1.00				
9.0	1310	161.60*	13200	1.15				
9.9	1200	148.15	13700	1.25				
11	1060	130.00*	14300	1.40				
12	1010	123.20*	14500	1.50				
14	880	107.83	15000	1.65	**S77p**			66
15	795	97.14	15000	1.80	**SF77p**	-	**DRN90L4**	76
17	700	85.22	14600	2.0	**SA77p**			65
19	680	75.09	13600	2.0	**SAF77p**			72
20	645	71.33	13500	2.1				
22	550	66.67	13900	2.4				
23	570	63.03	13200	2.3				
26	470	56.92	13400	2.6				
27	490	53.87	12700	2.7				
30	450	49.38	12500	2.9				

P_N = 1.5 kW

n_a min^{-1}	M_a Nm	i	F_{Ra} N	SEW f_B	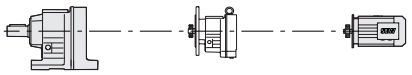			m kg
7.7	1290	189.09	11500	1.00				
9.0	1110	161.60*	13000	1.15				
9.9	1030	148.15	13600	1.20				
11	910	130.00*	14300	1.30				
12	870	123.20*	14600	1.40				
14	770	107.83	15000	1.50				
15	700	97.14	15300	1.65	**S77**			66
17	620	85.22	15300	1.80	**SF77**			76
19	625	75.09	14100	1.75	**SA77**	-	**DRN90L4**	65
20	595	71.33	13900	1.85	**SAF77**			72
22	490	66.67	14400	2.1				
23	530	63.03	13600	2.1				
26	425	56.92	13900	2.3				
27	455	53.87	13100	2.4				
30	420	49.38	12900	2.6				
34	370	43.33	12500	3.0				
14	795	100.80*	9320	0.80				
17	680	85.83	9400	0.95				
19	620	78.00*	9320	1.05				
22	575	65.63	8470	1.25				
23	550	62.35*	8430	1.30				
27	480	54.70	8320	1.45				
31	410	46.40*	8150	1.65				
35	370	41.89	8030	1.80	**S67p**			46
40	325	36.85	7860	2.0	**SF67p**	-	**DRN90L4**	53
42	310	34.80*	7780	2.1	**SA67p**			47
49	265	29.63	7550	2.4	**SAF67p**			52
54	240	26.93	7400	2.5				
60	225	24.44	6800	1.85				
63	215	23.22*	6740	1.95				
72	189	20.37	6580	2.3				
85	161	17.28*	6370	2.6				
94	145	15.60*	6240	2.8				
17	580	85.83	8060	0.90				
19	535	78.00*	8560	1.00				
22	520	65.63	8670	0.90				
23	495	62.35*	8880	0.95				
27	440	54.70	8770	1.10				
31	375	46.40*	8550	1.30				
35	340	41.89	8400	1.40				
40	300	36.85	8200	1.60	**S67**			46
42	285	34.80*	8110	1.70	**SF67**	-	**DRN90L4**	53
49	245	29.63	7850	1.95	**SA67**			47
54	225	26.93	7690	2.2	**SAF67**			52
60	215	24.44	7040	1.60				
63	205	23.22*	6970	1.65				
72	180	20.37	6800	1.90				
85	153	17.28*	6580	2.2				
94	139	15.60*	6430	2.5				
106	123	13.73*	6250	2.8				

P_N = 1.5 kW

n_a min^{-1}	M_a Nm	i	F_{Ra} N	SEW f_B	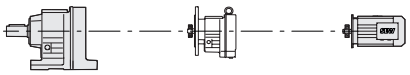			m kg
31	415	47.32	5120	0.85				
33	385	44.22*	6130	0.85				
38	335	38.23	6580	0.95				
45	285	32.48*	6460	1.05				
50	255	29.00*	6360	1.15				
59	220	24.77	6210	1.25	**S57p**			35
63	205	23.20*	6140	1.30	**SF57p**	-	**DRN90L4**	39
75	173	19.54	5950	1.45	**SA57p**			35
83	163	17.62	5410	1.40	**SAF57p**			37
89	152	16.47*	5360	1.50				
103	132	14.24	5230	1.70				
121	112	12.10*	5070	2.0				
135	100	10.80*	4960	2.3				
158	86	9.23*	4790	2.3				
45	260	32.48*	6610	0.95				
50	235	29.00*	6490	1.05				
59	200	24.77	6310	1.20				
63	190	23.20*	6230	1.30				
75	161	19.54	6020	1.35	**S57**			35
83	153	17.62	5460	1.10	**SF57**	-	**DRN90L4**	39
89	144	16.47*	5400	1.15	**SA57**			35
103	125	14.24	5260	1.35	**SAF57**			37
121	107	12.10*	5100	1.60				
135	95	10.80*	4980	1.75				
158	82	9.23*	4810	2.1				
63	205	23.20*	3060	0.80				
75	173	19.54	3070	0.90				
83	162	17.62	2480	0.95				
89	152	16.47*	2610	1.00				
103	132	14.24	2640	1.15				
121	112	12.10*	2640	1.30	**S47p**			31
135	100	10.80*	2630	1.40	**SF47p**	-	**DRN90L4**	35
158	86	9.23*	2600	1.55	**SA47p**			32
169	80	8.64*	2590	1.65	**SAF47p**			34
201	68	7.28	2530	1.60				
228	60	6.40*	2460	1.95				
271	50	5.39	2390	2.1				
307	45	4.76	2340	2.0				
365	37	4.00*	2260	2.0				
103	124	14.24	2680	0.90				
121	106	12.10*	2680	1.05				
135	95	10.80*	2660	1.15				
158	82	9.23*	2630	1.35	**S47**			31
169	77	8.64*	2610	1.40	**SF47**	-	**DRN90L4**	35
201	65	7.28	2550	1.60	**SA47**			32
228	58	6.40*	2470	1.30	**SAF47**			34
271	49	5.39	2400	1.50				
307	43	4.76	2350	1.65				
365	36	4.00*	2270	1.70				
162	83	9.02*	620	0.85				
183	74	8.00*	820	0.90				
215	63	6.80*	1030	0.95	**S37p**			28
231	59	6.33	940	0.95	**SF37p**	-	**DRN90L4**	29
271	50	5.38	1120	1.00	**SA37p**			28
300	45	4.86*	1210	1.05	**SAF37p**			29
368	37	3.97	1320	1.20				

P_N = 1.5 kW

n_a min^{-1}	M_a Nm	i	F_{Ra} N	SEW f_B	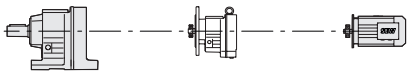			m kg
187	72	15.53	850	0.95				
217	62	13.39	1040	0.95				
233	58	12.48*	1120	1.00				
267	51	10.91	1250	1.15				
284	48	10.23	1300	1.15	**S37p**			25
322	42	9.02*	1360	1.10	**SF37p**	-	**DRN90S2**	26
364	37	8.00*	1350	1.05	**SA37p**			25
428	32	6.80*	1340	1.00	**SAF37p**			26
459	30	6.33	1300	1.30				
540	25	5.38	1280	1.25				
598	23	4.86*	1260	1.20				
733	19	3.97	1220	1.10				
322	41	9.02*	1380	0.90	**S37**			25
364	36	8.00*	1370	0.95	**SF37**	-	**DRN90S2**	26
428	31	6.80*	1350	0.95	**SA37**			25
					SAF37			26

P_N = 2.2 kW

n_a min^{-1}	M_a Nm	i	F_{Ra} N	SEW f_B	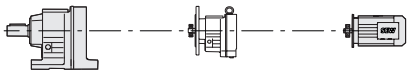			m kg
3.9	4620	376	25700	0.95	**S97p**			190
4.4	4070	327	33000	1.05	**SF97p**	**R57**	**DRN100LS4**	220
5.1	3600	287	34000	1.20	**SA97p**			185
5.8	3160	252	34700	1.35	**SAF97p**			210
3.5	4810	420	22200	0.85	**S97**			190
3.9	4340	376	29600	0.95	**SF97**	**R57**	**DRN100LS4**	220
4.4	3810	327	33600	1.10	**SA97**			185
5.1	3360	287	34400	1.25	**SAF97**			210
5.8	2950	252	35000	1.40				
3.7	4720	262.22	26000	0.90	**S97p**			180
4.2	4200	231.67	32800	1.00	**SF97p**	-	**DRN112M6**	215
5.0	3590	196.52	34000	1.20	**SA97p**			175
5.4	3320	180.95	34500	1.30	**SAF97p**			200
6.0	2970	161.74	35000	1.45				
5.1	3510	286.40*	34100	1.20				
5.5	3230	262.22	34600	1.35				
6.3	2860	231.67	35200	1.50				
7.4	2440	196.52	35700	1.75	**S97p**			165
8.0	2250	180.95	35900	1.90	**SF97p**	-	**DRN100LS4**	200
9.0	2020	161.74	36200	2.1	**SA97p**			160
10	1820	145.60*	36300	2.4	**SAF97p**			185
11	1650	131.85	36500	2.6				
12	1460	116.92	36600	2.9				
3.4	4390	286.40*	32200	0.95	**S97**			180
3.7	4050	262.22	33100	1.05	**SF97**	-	**DRN112M6**	215
4.2	3620	231.67	33900	1.15	**SA97**			175
5.0	3110	196.52	34800	1.35	**SAF97**			200

P_N = 2.2 kW

n_a min^{-1}	M_a Nm	i	F_{Ra} N	SEW f_B	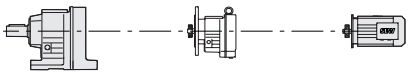			m kg
5.1	3050	286.40*	34900	1.30				
5.5	2810	262.22	35200	1.40				
6.3	2510	231.67	35600	1.60				
7.4	2150	196.52	36000	1.85				
8.0	2000	180.95	36200	1.95	**S97**			165
9.0	1800	161.74	36300	2.1	**SF97**	-	**DRN100LS4**	200
10	1630	145.60*	36500	2.3	**SA97**			160
11	1480	131.85	36600	2.5	**SAF97**			185
12	1330	116.92	36700	2.7				
14	1200	105.71	36800	2.9				
16	1030	89.60*	36900	3.2				
5.6	3110	258.18	14900	0.95				
6.5	2700	222.40*	27100	1.05				
7.1	2470	202.96	27600	1.15				
8.1	2200	180.00*	28100	1.25				
9.6	1860	151.30	28700	1.45				
10	1710	139.05	28900	1.55	**S87p**			105
12	1530	123.48	29100	1.70	**SF87p**	-	**DRN100LS4**	130
13	1370	110.40*	29300	1.85	**SA87p**			105
15	1230	99.26	29500	2.0	**SAF87p**			120
17	1070	86.15	29600	2.2				
18	1100	81.76	29600	2.2				
19	960	77.14	29700	2.4				
21	950	70.43	29700	2.5				
23	870	64.27	29800	2.7				
5.6	2660	258.18	27100	0.85				
6.5	2320	222.40*	27900	1.00				
7.1	2140	202.96	28200	1.05				
8.1	1920	180.00*	28600	1.15				
9.6	1630	151.30	29000	1.30				
10	1510	139.05	29200	1.40				
12	1350	123.48	29300	1.50	**S87**			105
13	1220	110.40*	29500	1.65	**SF87**	-	**DRN100LS4**	130
15	1100	99.26	29600	1.80	**SA87**			105
17	970	86.15	29700	1.95	**SAF87**			120
18	1030	81.76	29600	1.55				
19	870	77.14	29800	2.1				
21	890	70.43	29800	1.80				
23	820	64.27	29800	1.95				
25	730	57.00*	29900	2.2				

P_N = 2.2 kW

n_a min^{-1}	M_a Nm	i	F_{Ra} N	SEW f_B	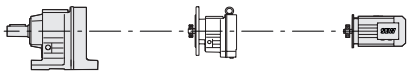			m kg
9.8	1780	148.15	11300	0.85				
11	1560	130.00*	12100	0.95				
12	1480	123.20*	12500	1.00				
13	1300	107.83	13200	1.15				
15	1180	97.14	13500	1.20				
17	1040	85.22	13300	1.35				
19	920	75.20*	13100	1.45				
22	810	66.67	12800	1.60				
23	840	63.03	11900	1.55	**S77p**			70
25	695	56.92	12500	1.75	**SF77p**	-	**DRN100LS4**	80
27	725	53.87	11600	1.80	**SA77p**			69
29	665	49.38	11500	1.95	**SAF77p**			76
33	585	43.33	11300	2.1				
35	555	41.07	11200	2.2				
40	485	35.94	10900	2.5				
45	435	32.38	10700	2.7				
51	385	28.41	10400	3.0				
63	315	22.89	9300	2.7				
69	290	20.99	9150	2.8				
11	1350	130.00*	9150	0.90				
12	1290	123.20*	11500	0.95				
13	1140	107.83	12800	1.05				
15	1030	97.14	13600	1.10				
17	910	85.22	14100	1.20				
19	810	75.20*	13800	1.30				
22	725	66.67	13500	1.45				
23	785	63.03	12400	1.40				
25	625	56.92	13000	1.60	**S77**			70
27	675	53.87	12100	1.65	**SF77**	-	**DRN100LS4**	80
29	620	49.38	11900	1.75	**SA77**			69
33	545	43.33	11700	2.0	**SAF77**			76
35	520	41.07	11500	2.1				
40	455	35.94	11200	2.4				
45	415	32.38	11000	2.6				
51	365	28.41	10700	2.9				
58	325	25.07	10400	3.2				
63	305	22.89	9550	2.3				
69	280	20.99	9390	2.5				
21	795	67.57	7840	0.80				
27	715	54.70	6990	1.00				
31	605	46.40*	7020	1.10				
35	550	41.89	7010	1.20				
39	485	36.85	6970	1.35				
42	455	34.80*	6940	1.40				
49	390	29.63	6830	1.60				
54	355	26.93	6750	1.70	**S67p**			50
62	305	23.33	6620	1.70	**SF67p**	-	**DRN100LS4**	57
71	280	20.37	5910	1.55	**SA67p**			51
84	240	17.28*	5810	1.75	**SAF67p**			55
93	215	15.60*	5730	1.90				
106	189	13.73*	5610	2.1				
112	178	12.96*	5560	2.2				
131	152	11.03	5400	2.5				
145	138	10.03	5300	2.6				
167	120	8.69	5150	2.9				

P_N = 2.2 kW

n_a min^{-1}	M_a Nm	i	F_{Ra} N	SEW f_B	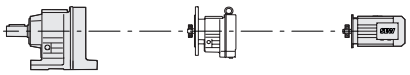			m kg
31	555	46.40*	7480	0.85				
35	505	41.89	7430	0.95				
39	445	36.85	7350	1.10				
42	420	34.80*	7300	1.15				
49	360	29.63	7160	1.35				
54	330	26.93	7060	1.45				
62	290	23.33	6900	1.65	**S67**			50
71	265	20.37	6130	1.30	**SF67**	-	**DRN100LS4**	57
84	225	17.28*	6010	1.50	**SA67**			51
93	205	15.60*	5920	1.65	**SAF67**			55
106	181	13.73*	5800	1.90				
112	171	12.96*	5740	2.0				
131	146	11.03	5570	2.3				
145	133	10.03	5470	2.6				
167	116	8.69	5300	2.9				
59	325	24.77	5470	0.85				
63	305	23.20*	5450	0.90				
74	255	19.54	5370	1.00				
102	194	14.24	4650	1.15				
120	165	12.10*	4580	1.35				
134	148	10.80*	4520	1.50	**S57p**			39
157	126	9.23*	4420	1.55	**SF57p**	-	**DRN100LS4**	43
168	118	8.64*	4380	1.60	**SA57p**			39
199	100	7.28	4250	1.55	**SAF57p**			41
227	88	6.40*	4100	1.75				
269	74	5.39	3960	2.0				
305	66	4.76	3860	1.95				
363	55	4.00*	3710	1.95				
102	184	14.24	4700	0.90				
120	158	12.10*	4630	1.05				
134	141	10.80*	4560	1.20				
157	121	9.23*	4450	1.40	**S57**			39
168	114	8.64*	4400	1.45	**SF57**	-	**DRN100LS4**	43
199	96	7.28	4270	1.50	**SA57**			39
227	85	6.40*	4120	1.15	**SAF57**			41
269	72	5.39	3980	1.30				
305	64	4.76	3870	1.45				
363	54	4.00*	3720	1.65				
120	165	12.10*	1500	0.90				
134	148	10.80*	1740	0.95				
157	126	9.23*	2020	1.05				
168	118	8.64*	2110	1.10	**S47p**			35
199	100	7.28	2180	1.10	**SF47p**	-	**DRN100LS4**	39
212	94	6.83	2130	1.25	**SA47p**			36
227	88	6.40*	2130	1.35	**SAF47p**			38
269	74	5.39	2120	1.40				
305	66	4.76	2100	1.40				
363	55	4.00*	2060	1.35				

P_N = 3.0 kW

n_a min^{-1}	M_a Nm	i	F_{Ra} N	SEW f_B	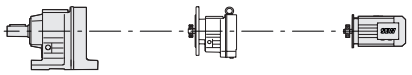			m kg
5.1	4900	287	18500	0.90	**S97p**			195
5.8	4310	252	30600	1.00	**SF97p**	**R57**	**DRN100L4**	230
6.7	3770	219	33700	1.15	**SA97p**			190
7.1	3540	205	34100	1.20	**SAF97p**			215
5.1	4580	287	26000	0.90	**S97**			195
5.8	4020	252	33100	1.05	**SF97**	**R57**	**DRN100L4**	230
6.7	3520	219	34100	1.20	**SA97**			190
7.1	3310	205	34500	1.25	**SAF97**			215
5.1	4770	286.40*	24200	0.90				
5.6	4380	262.22	32400	1.00				
6.3	3890	231.67	33400	1.10				
7.4	3310	196.52	34500	1.30				
8.1	3060	180.95	34900	1.40	**S97p**			170
9.0	2740	161.74	35300	1.55	**SF97p**	-	**DRN100L4**	205
10	2470	145.60*	35700	1.75	**SA97p**			165
11	2240	131.85	35900	1.90	**SAF97p**			195
12	1990	116.92	36200	2.2				
14	1800	105.71	36300	2.4				
16	1530	89.60*	36600	2.7				
18	1500	80.85	36600	2.5				
5.1	4140	286.40*	32900	0.95				
5.6	3820	262.22	33600	1.05				
6.3	3410	231.67	34300	1.15				
7.4	2930	196.52	35100	1.35				
8.1	2710	180.95	35400	1.45	**S97**			170
9.0	2440	161.74	35700	1.55	**SF97**	-	**DRN100L4**	205
10	2210	145.60*	36000	1.70	**SA97**			165
11	2020	131.85	36200	1.80	**SAF97**			195
12	1800	116.92	36300	1.95				
14	1640	105.71	36500	2.1				
16	1400	89.60*	36600	2.3				
18	1420	80.85	36600	2.3				
8.1	2990	180.00*	20100	0.95				
9.6	2530	151.30	27400	1.05				
10	2330	139.05	27900	1.15				
12	2070	123.48	28300	1.25				
13	1860	110.40*	28700	1.35				
15	1670	99.26	28900	1.45				
17	1450	86.15	29200	1.60	**S87p**			115
18	1500	81.76	29100	1.65	**SF87p**	-	**DRN100L4**	135
19	1300	77.14	29400	1.75	**SA87p**			110
21	1300	70.43	29400	1.85	**SAF87p**			125
23	1180	64.27	29500	2.0				
26	1050	57.00*	29600	2.2				
30	890	47.91	29800	2.6				
33	810	44.03	29800	2.7				
37	725	39.10	29900	3.0				

P_N = 3.0 kW

n_a min^{-1}	M_a Nm	i	F_{Ra} N	SEW f_B	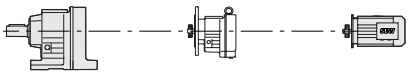			m kg
8.1	2600	180.00*	27300	0.85				
9.6	2220	151.30	28100	0.95				
10	2050	139.05	28400	1.00				
12	1840	123.48	28700	1.10				
13	1650	110.40*	29000	1.20				
15	1500	99.26	29200	1.30				
17	1310	86.15	29400	1.45	**S87**			115
18	1400	81.76	29300	1.15	**SF87**	-	**DRN100L4**	135
19	1180	77.14	29500	1.55	**SA87**			110
21	1220	70.43	29500	1.30	**SAF87**			125
23	1110	64.27	29600	1.45				
26	990	57.00*	29700	1.60				
30	840	47.91	29800	1.90				
33	775	44.03	29900	2.1				
37	690	39.10	29900	2.3				
42	620	34.96*	29900	2.6				
14	1770	107.83	11300	0.85				
15	1600	97.14	11700	0.90				
17	1410	85.22	11700	1.00				
19	1240	75.20*	11700	1.10				
22	1100	66.67	11600	1.15				
23	1150	63.03	10400	1.15				
26	940	56.92	11400	1.30				
27	980	53.87	10400	1.30				
29	900	49.38	10300	1.40				
34	795	43.33	10200	1.60	**S77p**			77
35	750	41.07	10200	1.65	**SF77p**	-	**DRN100L4**	87
41	660	35.94	10000	1.85	**SA77p**			77
45	595	32.38	9900	2.0	**SAF77p**			83
51	520	28.41	9700	2.2				
58	460	25.07	9500	2.4				
64	430	22.89	8540	1.95				
69	395	20.99	8450	2.1				
79	345	18.42	8300	2.3				
83	330	17.45	8230	2.4				
95	290	15.28	8040	2.7				
106	260	13.76	7890	2.9				

P_N = 3.0 kW

n_a min^{-1}	M_a Nm	i	F_{Ra} N	SEW f_B	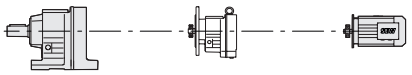			m kg
17	1240	85.22	12000	0.90				
19	1110	75.20*	12500	0.95				
22	990	66.67	12300	1.05				
23	1060	63.03	10900	1.05				
26	850	56.92	12000	1.15				
27	920	53.87	10900	1.20				
29	840	49.38	10800	1.30				
34	745	43.33	10700	1.50				
35	705	41.07	10600	1.55				
41	620	35.94	10400	1.75	**S77**			77
45	560	32.38	10200	1.95	**SF77**	-	**DRN100L4**	87
51	495	28.41	10000	2.1	**SA77**			77
58	440	25.07	9790	2.3	**SAF77**			83
64	415	22.89	8790	1.70				
69	380	20.99	8690	1.85				
79	335	18.42	8520	2.1				
83	315	17.45	8450	2.2				
95	280	15.28	8250	2.6				
106	250	13.76	8090	2.8				
121	220	12.07	7880	3.3				
137	195	10.65	7670	3.7				
31	820	46.40*	5730	0.85				
35	745	41.89	5840	0.90				
40	655	36.85	5940	1.00				
42	620	34.80*	5960	1.05				
49	530	29.63	6000	1.15				
54	480	26.93	5990	1.25				
62	415	23.33	5960	1.25	**S67p**			57
71	380	20.37	5140	1.15	**SF67p**	-	**DRN100L4**	64
84	325	17.28*	5150	1.30	**SA67p**			58
93	290	15.60*	5130	1.40	**SAF67p**			63
106	255	13.73*	5090	1.55				
112	240	12.96*	5060	1.60				
132	205	11.03	4980	1.80				
145	188	10.03	4920	1.95				
168	163	8.69	4810	2.2				
193	142	7.56*	4700	2.3				
42	575	34.80*	6370	0.85				
49	490	29.63	6350	1.00				
54	450	26.93	6330	1.05				
62	390	23.33	6260	1.25				
71	360	20.37	5360	0.95				
84	310	17.28*	5350	1.10	**S67**			57
93	280	15.60*	5320	1.20	**SF67**	-	**DRN100L4**	64
106	245	13.73*	5270	1.40	**SA67**			58
112	235	12.96*	5240	1.45	**SAF67**			63
132	199	11.03	5150	1.70				
145	181	10.03	5080	1.90				
168	157	8.69	4960	2.1				
193	137	7.56*	4840	2.2				

P_N = 3.0 kW

n_a min^{-1}	M_a Nm	i	F_{Ra} N	SEW f_B	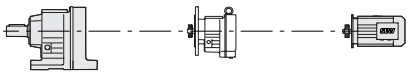			m kg
102	265	14.24	3990	0.85				
120	225	12.10*	4020	1.00				
135	200	10.80*	4020	1.10				
158	172	9.23*	3990	1.15				
169	161	8.64*	3970	1.15	**S57p**			46
200	136	7.28	3900	1.15	**SF57p**	-	**DRN100L4**	50
213	128	6.83	3810	1.25	**SA57p**			46
228	120	6.40*	3780	1.30	**SAF57p**			49
270	101	5.39	3690	1.45				
306	89	4.76	3620	1.45				
364	75	4.00*	3510	1.45				
135	192	10.80*	4060	0.90				
158	164	9.23*	4030	1.05				
169	154	8.64*	4000	1.10	**S57**			46
200	130	7.28	3930	1.10	**SF57**	-	**DRN100L4**	50
228	116	6.40*	3810	0.85	**SA57**			46
270	98	5.39	3710	0.95	**SAF57**			49
306	87	4.76	3630	1.05				
364	73	4.00*	3520	1.20				

P_N = 4.0 kW

n_a min^{-1}	M_a Nm	i	F_{Ra} N	SEW f_B	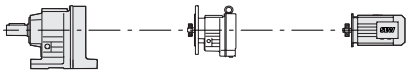			m kg
					S97p			205
6.7	5010	219	11700	0.85	**SF97p**	**R57**	**DRN112M4**	240
7.1	4710	205	24400	0.90	**SA97p**			200
					SAF97p			225
					S97			205
6.7	4680	219	24500	0.90	**SF97**	**R57**	**DRN112M4**	240
7.1	4400	205	28900	0.95	**SA97**			200
					SAF97			225
7.5	4390	196.52	32300	1.00				
8.1	4050	180.95	33100	1.05				
9.1	3630	161.74	33900	1.20				
10	3270	145.60*	34500	1.30				
11	2970	131.85	35000	1.45	**S97p**			180
13	2640	116.92	35500	1.65	**SF97p**	-	**DRN112M4**	215
14	2390	105.71	35800	1.80	**SA97p**			175
16	2020	89.60*	36100	2.0	**SAF97p**			200
18	1990	80.85	36200	1.85				
21	1760	71.43	36400	2.3				
24	1490	60.59	36600	2.7				
26	1380	55.79	36700	2.8				

P_N = 4.0 kW

n_a min^{-1}	M_a Nm	i	F_{Ra} N	SEW f_B	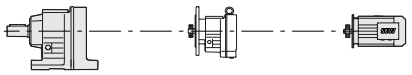			m kg
6.3	4520	231.67	30300	0.90				
7.5	3880	196.52	33400	1.05				
8.1	3600	180.95	34000	1.10				
9.1	3240	161.74	34600	1.20				
10	2930	145.60*	35100	1.25				
11	2670	131.85	35400	1.35	**S97**			180
13	2390	116.92	35800	1.45	**SF97**	-	**DRN112M4**	215
14	2170	105.71	36000	1.60	**SA97**			175
16	1850	89.60*	36300	1.75	**SAF97**			200
18	1880	80.85	36300	1.70				
21	1670	71.43	36500	2.0				
24	1420	60.59	36600	2.3				
26	1310	55.79	36700	2.5				
11	3090	139.05	16100	0.85				
12	2750	123.48	26700	0.95				
13	2460	110.40*	27600	1.00				
15	2220	99.26	28100	1.10				
17	1930	86.15	28600	1.20				
19	1730	77.14	28900	1.30				
21	1720	70.43	28900	1.40	**S87p**			125
23	1570	64.27	29100	1.50	**SF87p**	-	**DRN112M4**	145
26	1390	57.00*	29300	1.65	**SA87p**			120
31	1170	47.91	29500	1.90	**SAF87p**			135
33	1080	44.03	29600	2.1				
37	960	39.10	29700	2.3				
42	860	34.96*	29600	2.4				
47	770	31.43	28900	2.6				
54	670	27.28	27900	2.9				
57	640	25.50*	26500	2.3				
12	2440	123.48	27600	0.85				
13	2190	110.40*	28100	0.90				
15	1990	99.26	28500	1.00				
17	1740	86.15	28800	1.10				
19	1570	77.14	29100	1.15				
21	1610	70.43	29000	1.00				
23	1480	64.27	29200	1.10	**S87**			125
26	1320	57.00*	29400	1.20	**SF87**	-	**DRN112M4**	145
31	1110	47.91	29600	1.45	**SA87**			120
33	1020	44.03	29700	1.55	**SAF87**			135
37	910	39.10	29700	1.75				
42	820	34.96*	29700	1.95				
47	740	31.43	28900	2.2				
54	645	27.28	28000	2.5				
57	615	25.50*	26600	2.0				

P_N = 4.0 kW

n_a min^{-1}	M_a Nm	i	F_{Ra} N	SEW f_B	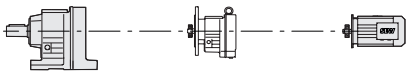			m kg
19	1650	75.20*	9910	0.80				
22	1460	66.67	10000	0.90				
26	1250	56.92	10100	1.00				
27	1300	53.87	8810	1.00				
30	1200	49.38	8900	1.05				
34	1050	43.33	8970	1.20				
36	1000	41.07	8990	1.25				
41	870	35.94	8980	1.40				
45	790	32.38	8940	1.50	**S77p**			86
52	690	28.41	8860	1.65	**SF77p**	-	**DRN112M4**	96
58	610	25.07	8750	1.80	**SA77p**			86
64	570	22.89	7600	1.45	**SAF77p**			93
70	525	20.99	7590	1.55				
79	460	18.42	7540	1.75				
84	435	17.45	7510	1.80				
96	380	15.28	7410	2.0				
106	345	13.76	7320	2.2				
121	300	12.07	7190	2.4				
137	265	10.65	7050	2.7				
26	1130	56.92	10800	0.90				
27	1220	53.87	9340	0.90				
30	1120	49.38	9390	1.00				
34	990	43.33	9420	1.10				
36	940	41.07	9410	1.15				
41	820	35.94	9370	1.35				
45	745	32.38	9300	1.45				
52	655	28.41	9190	1.60				
58	580	25.07	9060	1.75	**S77**			86
64	545	22.89	7840	1.30	**SF77**	-	**DRN112M4**	96
70	505	20.99	7820	1.40	**SA77**			86
79	440	18.42	7760	1.60	**SAF77**			93
84	420	17.45	7720	1.70				
96	370	15.28	7620	1.95				
106	335	13.76	7520	2.1				
121	295	12.07	7380	2.5				
137	260	10.65	7230	2.8				
155	230	9.44	7070	3.2				
182	197	8.06	6850	3.5				
49	700	29.63	4970	0.90				
54	640	26.93	5060	0.95				
63	555	23.33	5140	0.95				
72	480	20.30*	5180	0.95				
85	430	17.28*	3870	0.95	**S67p**			67
94	385	15.60*	4220	1.05	**SF67p**	-	**DRN112M4**	73
107	340	13.73*	4440	1.15	**SA67p**			68
113	320	12.96*	4450	1.20	**SAF67p**			72
133	275	11.03	4450	1.35				
146	250	10.03	4440	1.45				
169	215	8.69	4390	1.60				
194	188	7.56*	4330	1.75				

P_N = 4.0 kW

n_a min^{-1}	M_a Nm	i	F_{Ra} N	SEW f_B	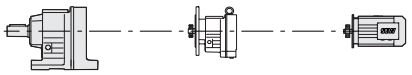			m kg
85	410	17.28*	4060	0.85				
94	370	15.60*	4400	0.90				
107	325	13.73*	4620	1.05	**S67**			67
113	310	12.96*	4630	1.10	**SF67**	-	**DRN112M4**	73
133	265	11.03	4620	1.30	**SA67**			68
146	240	10.03	4600	1.40	**SAF67**			72
169	210	8.69	4540	1.60				
194	182	7.56*	4480	1.60				

P_N = 5.5 kW

n_a min^{-1}	M_a Nm	i	F_{Ra} N	SEW f_B	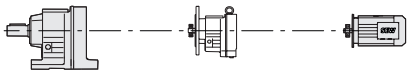			m kg
9.0	5000	161.74	12700	0.85				
10	4510	145.60*	30700	0.95				
11	4090	131.85	33000	1.05				
13	3630	116.92	33900	1.20				
14	3290	105.71	34500	1.30				
16	2790	89.60*	35300	1.45	**S97p**			190
19	2440	78.26	35700	1.60	**SF97p**	-	**DRN132S4**	225
20	2420	71.43	35700	1.70	**SA97p**			185
22	2040	65.45	36100	1.70	**SAF97p**			215
24	2060	60.59	36100	1.95				
26	1900	55.79	36300	2.1				
29	1700	49.87	36400	2.3				
33	1530	44.89	36600	2.4				
36	1380	40.65	36700	2.6				
9.0	4460	161.74	31200	0.85				
10	4040	145.60*	33100	0.90				
11	3680	131.85	33800	1.00				
13	3290	116.92	34500	1.05				
14	2990	105.71	35000	1.15				
16	2560	89.60*	35600	1.25	**S97**			190
19	2250	78.26	35900	1.35	**SF97**	-	**DRN132S4**	225
20	2300	71.43	35900	1.45	**SA97**			185
22	1890	65.45	36300	1.55	**SAF97**			215
24	1960	60.59	36200	1.70				
26	1810	55.79	36300	1.80				
29	1620	49.87	36500	2.0				
33	1460	44.89	36600	2.3				
36	1330	40.65	36700	2.5				

P_N = 5.5 kW

n_a min^{-1}	M_a Nm	i	F_{Ra} N	SEW f_B	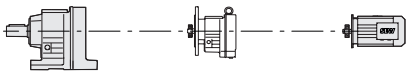			m kg
17	2660	86.15	27200	0.90	**S87p** **SF87p** **SA87p** **SAF87p**	-	**DRN132S4**	135
19	2380	77.14	27700	0.95				155
23	1980	64.00*	28500	1.10				130
26	1920	57.00*	28500	1.20				150
30	1620	47.91	29000	1.40				
33	1490	44.03	29200	1.50				
37	1320	39.10	29000	1.65				
42	1180	34.96*	28400	1.75				
46	1060	31.43	27800	1.90				
54	920	27.28	27000	2.1				
57	880	25.50*	25300	1.65				
68	740	21.43	24500	1.90				
74	680	19.70	24100	2.0				
84	605	17.49	23500	2.2				
93	540	15.64*	23000	2.3				
104	485	14.06	22500	2.6				
120	425	12.21	21700	2.9				
19	2160	77.14	28200	0.85	**S87** **SF87** **SA87** **SAF87**	-	**DRN132S4**	135
23	1810	64.00*	28700	0.95				155
26	1810	57.00*	28700	0.90				130
30	1530	47.91	29100	1.05				150
33	1410	44.03	29300	1.15				
37	1260	39.10	29100	1.25				
42	1130	34.96*	28500	1.40				
46	1020	31.43	27900	1.55				
54	890	27.28	27100	1.80				
57	850	25.50*	25400	1.45				
68	715	21.43	24600	1.75				
74	660	19.70	24200	1.90				
84	585	17.49	23600	2.1				
93	525	15.64*	23000	2.4				
104	475	14.06	22500	2.6				
120	410	12.21	21800	3.0				
134	370	10.93	21200	3.4				
34	1450	43.33	7070	0.85	**S77p** **SF77p** **SA77p** **SAF77p**	-	**DRN132S4**	98
36	1370	41.07	7180	0.90				105
41	1200	35.94	7400	1.00				97
45	1090	32.38	7520	1.10				105
51	950	28.41	7610	1.20				
58	840	25.07	7650	1.30				
66	745	22.22	7650	1.45				
79	635	18.42	6030	1.25				
84	600	17.45	6260	1.30				
96	525	15.28	6480	1.45				
106	475	13.76	6480	1.55				
121	415	12.07	6450	1.75				
137	365	10.65	6390	1.95				
155	325	9.44	6320	2.2				
181	280	8.06	6200	2.5				

P_N = 5.5 kW

n_a min^{-1}	M_a Nm	i	F_{Ra} N	SEW f_B	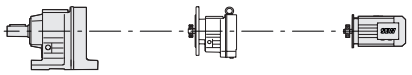			m kg
36	1290	41.07	7660	0.85				
41	1130	35.94	7830	0.95				
45	1030	32.38	7910	1.05				
51	900	28.41	7970	1.15				
58	800	25.07	7980	1.25				
66	710	22.22	7950	1.40	**S77**			98
79	610	18.42	6230	1.15	**SF77**	-	**DRN132S4**	105
84	580	17.45	6470	1.25	**SA77**			97
96	510	15.28	6680	1.40	**SAF77**			105
106	460	13.76	6670	1.55				
121	405	12.07	6630	1.80				
137	355	10.65	6570	2.0				
155	315	9.44	6490	2.3				
181	270	8.06	6360	2.5				
106	470	13.73*	2100	0.85				
113	445	12.96*	2360	0.90	**S67p**			78
132	375	11.03	2980	1.00	**SF67p**	-	**DRN132S4**	85
146	345	10.03	3290	1.05	**SA67p**			79
168	295	8.69	3680	1.20	**SAF67p**			84
193	260	7.56*	3800	1.25				
132	365	11.03	3120	0.95	**S67**			78
146	330	10.03	3430	1.05	**SF67**	-	**DRN132S4**	85
168	285	8.69	3820	1.15	**SA67**			79
193	250	7.56*	3940	1.20	**SAF67**			84

P_N = 7.5 kW

n_a min^{-1}	M_a Nm	i	F_{Ra} N	SEW f_B	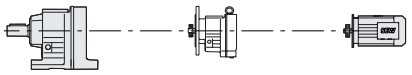			m kg
13	4930	116.92	17200	0.85				
14	4460	105.71	31400	0.95				
16	3790	89.60*	33600	1.10				
19	3310	78.26	34500	1.20				
21	3290	71.43	34500	1.25				
22	2770	65.45	35300	1.25				
24	2790	60.59	35200	1.40				
26	2570	55.79	35500	1.50	**S97p**			210
29	2300	49.87	35800	1.65	**SF97p**	-	**DRN132M4**	245
33	2070	44.89	36100	1.80	**SA97p**			205
36	1880	40.65	36300	1.90	**SAF97p**			230
41	1670	36.05	35900	2.1				
45	1510	32.60	35200	2.3				
56	1240	26.39	32100	2.1				
62	1110	23.59	31400	2.3				
69	1000	21.23	30700	2.6				
76	910	19.23	30100	2.9				

P_N = 7.5 kW

n_a min^{-1}	M_a Nm	i	F_{Ra} N	SEW f_B	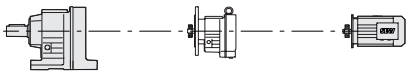			m kg
14	4060	105.71	33100	0.85				
16	3470	89.60*	34200	0.95				
19	3050	78.26	34900	1.00				
21	3120	71.43	34800	1.05				
22	2570	65.45	35500	1.15				
24	2660	60.59	35400	1.25				
26	2460	55.79	35700	1.35	**S97**			210
29	2200	49.87	36000	1.50	**SF97**			245
33	1990	44.89	36200	1.65	**SA97**	-	**DRN132M4**	205
36	1800	40.65	36300	1.85	**SAF97**			230
41	1600	36.05	36100	2.1				
45	1450	32.60	35300	2.2				
56	1210	26.39	32100	2.2				
62	1080	23.59	31400	2.4				
69	980	21.23	30800	2.7				
76	890	19.23	30100	2.9				
26	2610	57.00*	27000	0.90				
31	2200	47.91	27700	1.05				
33	2020	44.03	27500	1.10				
38	1790	39.10	27100	1.20				
42	1610	34.96*	26700	1.30				
47	1440	31.43	26300	1.40				
54	1250	27.28	25700	1.55				
58	1190	25.50*	23600	1.20	**S87p**			150
68	1010	21.43	23100	1.40	**SF87p**	-	**DRN132M4**	175
75	920	19.70	22800	1.50	**SA87p**			150
84	820	17.49	22400	1.60	**SAF87p**			165
94	735	15.64*	22000	1.70				
104	660	14.06	21500	1.90				
120	575	12.21	20900	2.2				
134	515	10.93	20500	2.4				
162	425	9.07	19700	2.7				
186	370	7.88	19000	2.7				
33	1920	44.03	27800	0.85				
38	1710	39.10	27400	0.95				
42	1530	34.96*	26900	1.05				
47	1380	31.43	26500	1.15				
54	1200	27.28	25800	1.35				
58	1150	25.50*	23700	1.10				
68	970	21.43	23200	1.30	**S87**			150
75	900	19.70	22900	1.40	**SF87**	-	**DRN132M4**	175
84	795	17.49	22400	1.55	**SA87**			150
94	715	15.64*	22000	1.75	**SAF87**			165
104	645	14.06	21600	1.95				
120	560	12.21	21000	2.2				
134	500	10.93	20500	2.5				
162	415	9.07	19700	2.7				
186	365	7.88	19100	2.8				

P_N = 7.5 kW

n_a min^{-1}	M_a Nm	i	F_{Ra} N	SEW f_B	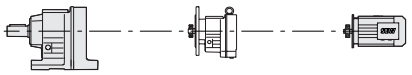			m kg
52	1290	28.41	5960	0.90				
59	1140	25.07	6190	0.95				
66	1010	22.22	6350	1.05				
77	870	18.97	6490	1.15				
80	860	18.42	2210	0.95	**S77p**			115
84	810	17.45	2620	1.00	**SF77p**	-	**DRN132M4**	125
96	715	15.28	3500	1.05	**SA77p**			115
107	645	13.76	4090	1.15	**SAF77p**			120
122	565	12.07	4720	1.30				
138	500	10.65	5210	1.45				
155	440	9.44	5550	1.65				
182	375	8.06	5530	1.80				
52	1230	28.41	6340	0.85				
59	1090	25.07	6540	0.95				
66	970	22.22	6670	1.00				
80	830	18.42	2360	0.85				115
84	785	17.45	2770	0.90	**S77**			125
96	690	15.28	3660	1.05	**SF77**	-	**DRN132M4**	115
107	620	13.76	4250	1.15	**SA77**			120
122	545	12.07	4880	1.30	**SAF77**			
138	485	10.65	5380	1.50				
155	430	9.44	5710	1.70				
182	370	8.06	5690	1.85				

P_N = 9.2 kW

n_a min^{-1}	M_a Nm	i	F_{Ra} N	SEW f_B	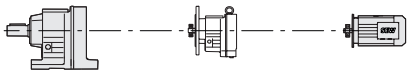			m kg
16	4640	89.60*	28700	0.90				
19	4050	78.26	33100	0.95				
22	3390	65.45	34300	1.05				
26	3150	55.79	34700	1.25				
29	2820	49.87	35200	1.35				
33	2540	44.89	35600	1.45				
36	2300	40.65	35500	1.55	**S97p**			220
41	2040	36.05	34800	1.70	**SF97p**	-	**DRN132L4**	250
45	1850	32.60	34100	1.85	**SA97p**			215
56	1530	26.39	30900	1.70	**SAF97p**			240
62	1360	23.59	30300	1.90				
69	1230	21.23	29800	2.1				
76	1110	19.23	29200	2.3				
86	990	17.05	28600	2.6				
95	890	15.42	28000	2.8				

P_N = 9.2 kW

n_a min^{-1}	M_a Nm	i	F_{Ra} N	SEW f_B	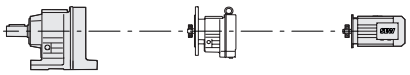			m kg
19	3730	78.26	33700	0.80				
22	3150	65.45	34700	0.90				
26	3010	55.79	34900	1.10				
29	2700	49.87	35400	1.20				
33	2440	44.89	35700	1.35				
36	2210	40.65	35700	1.50				
41	1970	36.05	34900	1.70	**S97**			220
45	1780	32.60	34300	1.80	**SF97**			250
56	1480	26.39	30900	1.75	**SA97**	-	**DRN132L4**	215
62	1330	23.59	30400	1.95	**SAF97**			240
69	1200	21.23	29800	2.2				
76	1090	19.23	29300	2.4				
86	960	17.05	28600	2.7				
95	870	15.42	28000	2.8				
113	740	13.07	27100	3.1				
129	650	11.41	26200	3.4				
33	2470	44.03	25800	0.90				
38	2200	39.10	25600	1.00				
42	1970	34.96*	25300	1.05				
47	1770	31.43	25100	1.15				
54	1540	27.28	24600	1.30				
60	1380	24.43	24200	1.35				160
73	1140	20.27	23500	1.55	**S87p**			180
75	1130	19.70	21700	1.20	**SF87p**	-	**DRN132L4**	160
84	1010	17.49	21400	1.30	**SA87p**			175
94	900	15.64*	21100	1.40	**SAF87p**			
105	810	14.06	20700	1.55				
120	700	12.21	20300	1.75				
135	630	10.93	19900	1.95				
162	520	9.07	19200	2.2				
186	455	7.88	18600	2.2				
42	1880	34.96*	25600	0.85				
47	1690	31.43	25300	0.95				
54	1470	27.28	24800	1.10				
60	1320	24.43	24400	1.20				
73	1100	20.27	23600	1.45				
75	1100	19.70	21800	1.15	**S87**			160
84	980	17.49	21500	1.25	**SF87**			180
94	870	15.64*	21100	1.40	**SA87**	-	**DRN132L4**	160
105	785	14.06	20800	1.55	**SAF87**			175
120	685	12.21	20300	1.80				
135	615	10.93	19900	2.0				
162	510	9.07	19200	2.2				
186	445	7.88	18600	2.3				
66	1240	22.22	5250	0.85				
77	1060	18.97	5540	0.95				
107	790	13.76	1660	0.95	**S77p**			125
122	690	12.07	2540	1.05	**SF77p**	-	**DRN132L4**	135
138	610	10.65	3250	1.20	**SA77p**			125
156	540	9.44	3840	1.35	**SAF77p**			130
182	460	8.06	4460	1.45				

P_N = 9.2 kW

n_a min^{-1}	M_a Nm	i	F_{Ra} N	SEW f_B	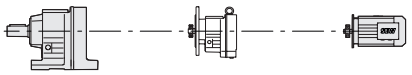			m kg
77	1020	18.97	5840	0.90				
107	760	13.76	1770	0.95	**S77**			125
122	670	12.07	2660	1.05	**SF77**	-	**DRN132L4**	135
138	595	10.65	3380	1.20	**SA77**			125
156	525	9.44	3970	1.40	**SAF77**			130
182	450	8.06	4590	1.50				

P_N = 11.0 kW

n_a min^{-1}	M_a Nm	i	F_{Ra} N	SEW f_B	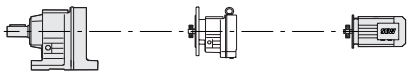			m kg
19	4840	78.26	21600	0.80				
23	4050	65.45	33100	0.85				
26	3760	55.79	33700	1.05				
30	3370	49.87	34400	1.15				
33	3030	44.89	34500	1.20				
36	2750	40.65	34100	1.30				
41	2440	36.05	33500	1.45	**S97p**			250
45	2200	32.60	33000	1.55	**SF97p**			285
56	1820	26.39	29600	1.45	**SA97p**	-	**DRN160M4**	245
62	1630	23.59	29200	1.60	**SAF97p**			270
69	1470	21.23	28700	1.75				
77	1330	19.23	28300	1.95				
86	1180	17.05	27700	2.2				
96	1060	15.42	27200	2.3				
113	900	13.07	26400	2.6				
129	790	11.41	25700	2.8				
26	3590	55.79	34000	0.90				
30	3220	49.87	34600	1.05				
33	2910	44.89	34800	1.15				
36	2640	40.65	34300	1.25				
41	2350	36.05	33700	1.40				
45	2130	32.60	33200	1.50	**S97**			250
56	1770	26.39	29700	1.45	**SF97**			285
62	1580	23.59	29200	1.65	**SA97**	-	**DRN160M4**	245
69	1430	21.23	28800	1.80	**SAF97**			270
77	1300	19.23	28300	2.0				
86	1150	17.05	27800	2.2				
96	1040	15.42	27300	2.4				
113	880	13.07	26400	2.6				
129	775	11.41	25700	2.9				
38	2620	39.10	24000	0.80				
42	2350	34.96*	23900	0.90				
47	2110	31.43	23800	0.95				
54	1830	27.28	23500	1.05				
60	1640	24.43	23200	1.15				
73	1360	20.27	22700	1.30	**S87p**			190
75	1350	19.70	20600	1.00	**SF87p**			215
84	1200	17.49	20400	1.10	**SA87p**	-	**DRN160M4**	190
94	1070	15.64*	20200	1.15	**SAF87p**			205
105	970	14.06	19900	1.30				
121	840	12.21	19500	1.50				
135	750	10.93	19200	1.65				
162	625	9.07	18600	1.85				
187	540	7.88	18100	1.85				

P_N = 11.0 kW

n_a min^{-1}	M_a Nm	i	F_{Ra} N	SEW f_B	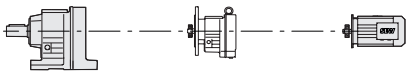			m kg
54	1760	27.28	23700	0.90	**S87** **SF87** **SA87** **SAF87**	-	**DRN160M4**	190 215 190 205
60	1580	24.43	23400	1.00				
73	1320	20.27	22800	1.20				
75	1310	19.70	20700	0.95				
84	1160	17.49	20500	1.05				
94	1040	15.64*	20200	1.20				
105	940	14.06	20000	1.30				
121	820	12.21	19600	1.50				
135	735	10.93	19300	1.70				
162	610	9.07	18700	1.85				
187	530	7.88	18200	1.90				
78	1270	18.97	4550	0.80	**S77p** **SF77p** **SA77p** **SAF77p**	-	**DRN160M4**	155 165 155 160
122	830	12.07	305	0.85				
138	730	10.65	1240	1.00				
156	645	9.44	2020	1.10				
183	550	8.06	2870	1.25				

P_N = 15.0 kW

n_a min^{-1}	M_a Nm	i	F_{Ra} N	SEW f_B	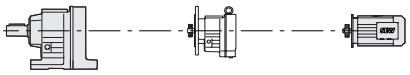			m kg
30	4590	49.87	26600	0.85	**S97p** **SF97p** **SA97p** **SAF97p**	-	**DRN160L4**	265 300 260 290
33	4130	44.89	31200	0.90				
36	3740	40.65	31100	0.95				
41	3320	36.05	30800	1.05				
45	3000	32.60	30600	1.15				
56	2480	26.39	26800	1.05				
62	2220	23.59	26600	1.15				
69	2000	21.23	26500	1.30				
77	1810	19.23	26200	1.45				
86	1600	17.05	25900	1.60				
96	1450	15.42	25600	1.70				
113	1230	13.07	25000	1.90				
129	1070	11.41	24400	2.1				
154	900	9.55	23700	2.3				
178	780	8.26	23000	2.3				
33	3960	44.89	31500	0.85	**S97** **SF97** **SA97** **SAF97**	-	**DRN160L4**	265 300 260 290
36	3590	40.65	31400	0.90				
41	3200	36.05	31100	1.05				
45	2900	32.60	30800	1.10				
56	2410	26.39	26900	1.10				
62	2160	23.59	26700	1.20				
69	1950	21.23	26600	1.35				
77	1770	19.23	26300	1.45				
86	1570	17.05	26000	1.65				
96	1420	15.42	25600	1.75				
113	1210	13.07	25000	1.95				
129	1050	11.41	24500	2.1				
154	880	9.55	23700	2.3				
178	765	8.26	23100	2.3				

P_N = 15.0 kW

n_a min^{-1}	M_a Nm	i	F_{Ra} N	SEW f_B	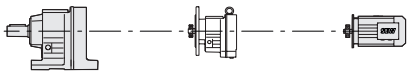			m kg
60	2240	24.43	21000	0.85				
73	1860	20.27	20800	0.95				
94	1460	15.64*	16800	0.85	**S87p**			210
105	1320	14.06	17900	0.95	**SF87p**	-	**DRN160L4**	230
121	1140	12.21	18000	1.10	**SA87p**			205
135	1020	10.93	17800	1.20	**SAF87p**			220
163	850	9.07	17500	1.35				
187	740	7.88	17100	1.35				
94	1420	15.64*	16800	0.85				
105	1280	14.06	17900	0.95	**S87**			210
121	1110	12.21	18000	1.10	**SF87**	-	**DRN160L4**	230
135	1000	10.93	17900	1.25	**SA87**			205
163	830	9.07	17500	1.35	**SAF87**			220
187	725	7.88	17200	1.40				

P_N = 18.5 kW

n_a min^{-1}	M_a Nm	i	F_{Ra} N	SEW f_B	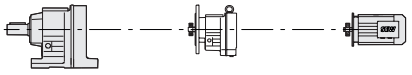			m kg
41	4090	36.05	28500	0.85				
45	3700	32.60	28500	0.90				
54	3130	27.63	28200	1.05				
61	2740	24.13	27900	1.10				
70	2460	21.23	24500	1.05	**S97p**			290
77	2220	19.23	24400	1.15	**SF97p**	-	**DRN180M4**	320
87	1970	17.05	24300	1.30	**SA97p**			285
96	1780	15.42	24100	1.40	**SAF97p**			310
113	1510	13.07	23800	1.55				
130	1320	11.41	23400	1.65				
155	1110	9.55	22800	1.85				
179	960	8.26	22200	1.85				
41	3930	36.05	28800	0.85				
45	3560	32.60	28700	0.90				
54	3030	27.63	28500	1.00				
61	2650	24.13	28100	1.10				
70	2390	21.23	24500	1.10	**S97**			290
77	2170	19.23	24500	1.20	**SF97**	-	**DRN180M4**	320
87	1930	17.05	24400	1.35	**SA97**			285
96	1750	15.42	24200	1.40	**SAF97**			310
113	1480	13.07	23800	1.55				
130	1300	11.41	23400	1.70				
155	1090	9.55	22800	1.90				
179	940	8.26	22300	1.90				
121	1400	12.21	14800	0.90	**S87p**			230
135	1260	10.93	16000	1.00	**SF87p**	-	**DRN180M4**	250
163	1040	9.07	16400	1.10	**SA87p**			225
187	910	7.88	16200	1.10	**SAF87p**			245

P_N = 22 kW

n_a min^{-1}	M_a Nm	i	F_{Ra} N	SEW f_B	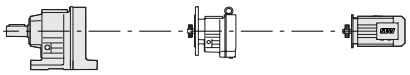			m kg
53	3730	27.63	26400	0.85				
61	3260	24.13	26400	0.95				
70	2920	21.23	18500	0.90				
77	2650	19.23	20400	1.00	**S97p**			305
87	2350	17.05	22300	1.10	**SF97p**	-	**DRN180L4**	340
96	2120	15.42	22700	1.15	**SA97p**			300
113	1800	13.07	22600	1.30	**SAF97p**			325
129	1570	11.41	22300	1.40				
155	1320	9.55	21900	1.55				
179	1140	8.26	21500	1.55				
53	3610	27.63	26700	0.85				
61	3160	24.13	26600	0.90				
70	2850	21.23	18600	0.90				
77	2580	19.23	20500	1.00	**S97**			305
87	2300	17.05	22400	1.10	**SF97**	-	**DRN180L4**	340
96	2080	15.42	22800	1.20	**SA97**			300
113	1760	13.07	22600	1.30	**SAF97**			325
129	1540	11.41	22400	1.45				
155	1290	9.55	21900	1.60				
179	1120	8.26	21500	1.60				

P_N = 30 kW

n_a min^{-1}	M_a Nm	i	F_{Ra} N	SEW f_B	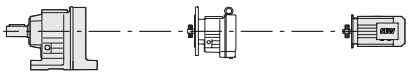			m kg
87	3200	17.05	11200	0.80				
96	2890	15.42	13700	0.85	**S97p**			415
113	2450	13.07	17000	0.95	**SF97p**	-	**DRN200L4**	445
130	2140	11.41	19000	1.05	**SA97p**			410
155	1790	9.55	19900	1.15	**SAF97p**			435
179	1550	8.26	19700	1.15				

4.5.3 Selection tables for low output speeds S..R..DRN.. in Nm

$M_{a\,max}$ = 92 Nm

n_a min^{-1}	i	F_{Ra} N	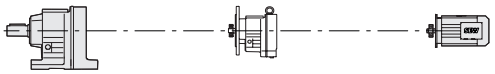			m kg
0.14	10037	3000	**S37** **SF37** **SA37** **SAF37**	**R17**	**DRN63MS4**	14 16 14 16
0.16	8654	3000				
0.17	8066	3000				
0.2	7051	3000				
0.23	6079	3000				
0.25	5431	3000				
0.29	4747	3000				
0.33	4155	3000				
0.38	3632	3000				
0.48	2866	3000				
0.56	2471	3000				
0.64	2160	3000				
0.73	1887	3000				
0.83	1665	3000				
0.95	1456	3000				
1.1	1271	3000				
1.2	1121	3000				
1.4	994	3000				
1.6	869	3000				
1.8	774	3000	**S37** **SF37** **SA37** **SAF37**	**R17**	**DRN63MS4**	14 15 14 15
2.1	666	3000				
2.3	596	3000				
2.7	521	3000				
3	456	3000				
3.5	398	3000				
3.9	351	3000				
4.6	303	3000				
5.2	265	3000				
6	232	3000				
6.8	202	3000				
7.7	179	3000	**S37** **SF37** **SA37** **SAF37**	**R17**	**DRN63M4**	15 16 15 16
8.7	158	3000				
9.5	144	3000				
12	118	3000				
13	110	3000	**S37** **SF37** **SA37** **SAF37**	**R17**	**DRN71MS4**	15 17 15 17

$M_{a\,max}$ = 99 Nm

n_a min^{-1}	i	F_{Ra} N	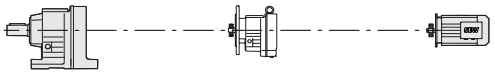			m kg
0.14	10037	3000	**S37p** **SF37p** **SA37p** **SAF37p**	**R17**	**DRN63MS4**	14 16 14 16
0.17	8066	3000				
0.2	7051	3000				
0.25	5431	3000				
0.29	4747	3000				

$M_{a\,max}$ = 100 Nm

n_a min^{-1}	i	F_{Ra} N	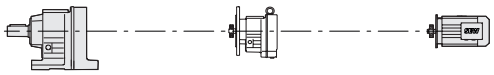			m kg
0.16	8654	3000	**S37p** **SF37p** **SA37p** **SAF37p**	**R17**	**DRN63MS4**	14 16 14 16

$M_{a\,max}$ = 101 Nm

n_a min^{-1}	i	F_{Ra} N	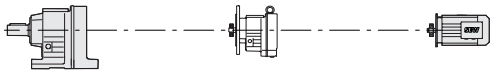			m kg
0.23	6079	3000	**S37p** **SF37p** **SA37p** **SAF37p**	**R17**	**DRN63MS4**	14 16 14 16

$M_{a\,max}$ = 102 Nm

n_a min^{-1}	i	F_{Ra} N	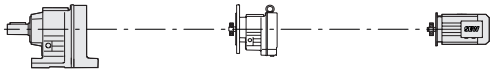			m kg
0.33 **0.38**	4155 3632	3000 3000	**S37p** **SF37p** **SA37p** **SAF37p**	**R17**	**DRN63MS4**	14 16 14 16

$M_{a\,max}$ = 105 Nm

n_a min^{-1}	i	F_{Ra} N	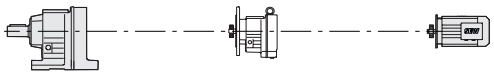			m kg
0.48 **0.56** **0.64** **0.73** **0.83** **0.95** **1.1** **1.2** **1.4** **1.6**	2866 2471 2160 1887 1665 1456 1271 1121 994 869	3000 3000 3000 3000 3000 3000 3000 3000 3000 3000	**S37p** **SF37p** **SA37p** **SAF37p**	**R17**	**DRN63MS4**	14 16 14 16
1.8 **2.1** **2.3** **2.7** **3** **3.5** **3.9** **4.6** **5.2** **6** **6.8**	774 666 596 521 456 398 351 303 265 232 202	3000 3000 3000 3000 3000 3000 3000 3000 3000 3000 3000	**S37p** **SF37p** **SA37p** **SAF37p**	**R17**	**DRN63MS4**	14 15 14 15
7.7 **8.7** **9.5** **12**	179 158 144 118	3000 3000 3000 3000	**S37p** **SF37p** **SA37p** **SAF37p**	**R17**	**DRN63M4**	15 16 15 16
13	110	3000	**S37p** **SF37p** **SA37p** **SAF37p**	**R17**	**DRN71MS4**	15 17 15 17

$M_{a\,max}$ = 183 Nm

n_a min^{-1}	i	F_{Ra} N	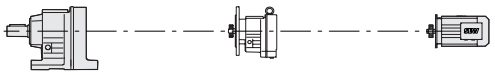			m kg
1.4	956	5210	**S47** **SF47** **SA47** **SAF47**	**R17**	**DRN63MS4**	17 21 18 20

$M_{a\,max}$ = 185 Nm

n_a min^{-1}	i	F_{Ra} N	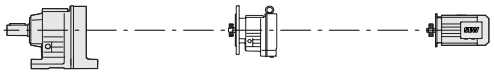			m kg
0.11	12909	5250	**S47** **SF47** **SA47** **SAF47**	**R17**	**DRN63MS4**	17 21 18 20
0.12	11189	5250				
0.13	10374	5250				
0.15	8992	5250				
0.18	7860	5250				
0.2	6887	5250				
0.23	6055	5250				
0.26	5292	5250				
0.3	4637	5250				
0.34	4092	5250				
0.39	3582	5200				
0.44	3131	5200				
0.51	2714	5200				
0.57	2412	5200				
0.65	2131	5200				
0.74	1863	5200				
0.83	1663	5200				
0.96	1435	5200				
1.1	1254	5200				
1.2	1120	5200				
1.3	1083	5200				
1.4	965	5200	**S47** **SF47** **SA47** **SAF47**	**R17**	**DRN63MS4**	17 21 18 20
1.6	865	5200				
1.8	750	5200				
2.1	655	5200				
2.4	574	5200				
2.7	506	5200				
3.2	438	5200				
3.6	388	5200				
4.1	336	5200	**S47** **SF47** **SA47** **SAF47**	**R17**	**DRN63M4**	18 21 19 21
4.7	294	5200				
5.5	257	5260	**S47** **SF47** **SA47** **SAF47**	**R17**	**DRN71MS4**	18 22 20 21
6.2	229	5200				
7	200	5200				
7.5	187	5200				
8.6	165	5200	**S47** **SF47** **SA47** **SAF47**	**R17**	**DRN71M4**	20 23 21 22
9.6	148	5200				
11	131	5200				

$M_{a\,max}$ = 194 Nm

n_a min^{-1}	i	F_{Ra} N	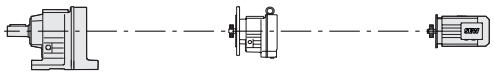			m kg
0.11	12909	5200	**S47p**	**R17**	**DRN63MS4**	17
0.13	10374	5200	**SF47p**			21
			SA47p			18
			SAF47p			20

$M_{a\,max}$ = 195 Nm

n_a min^{-1}	i	F_{Ra} N	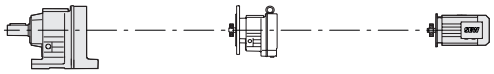			m kg
0.12	11189	5200	**S47p**	**R17**	**DRN63MS4**	17
0.15	8992	5200	**SF47p**			21
0.18	7860	5200	**SA47p**			18
0.23	6055	5200	**SAF47p**			20
0.26	5292	5200				

$M_{a\,max}$ = 196 Nm

n_a min^{-1}	i	F_{Ra} N	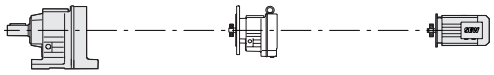			m kg
0.2	6887	5190	**S47p**	**R17**	**DRN63MS4**	17
0.3	4637	5190	**SF47p**			21
0.34	4092	5190	**SA47p**			18
			SAF47p			20

$M_{a\,max}$ = 200 Nm

n_a min^{-1}	i	F_{Ra} N	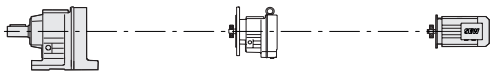			m kg
0.39	3582	5070				
0.44	3131	5070				
0.51	2714	5070				
0.57	2412	5070				
0.65	2131	5070	**S47p**	**R17**	**DRN63MS4**	17
0.74	1863	5070	**SF47p**			21
0.83	1663	5070	**SA47p**			18
0.96	1435	5070	**SAF47p**			20
1.1	1254	5070				
1.2	1120	5070				
1.3	1083	5070				
1.4	956	5070				
1.4	965	5070				
1.6	865	5070	**S47p**	**R17**	**DRN63MS4**	17
1.8	750	5070	**SF47p**			21
2.1	655	5070	**SA47p**			18
2.4	574	5070	**SAF47p**			20
2.7	506	5070				
3.2	438	5070				
3.5	388	5070	**S47p**	**R17**	**DRN63M4**	18
4.1	336	5080	**SF47p**			21
4.7	294	5080	**SA47p**			19
			SAF47p			21
5.5	257	5180	**S47p**	**R17**	**DRN71MS4**	18
6.2	229	5100	**SF47p**			22
7	200	5100	**SA47p**			20
7.5	187	5100	**SAF47p**			21
8.5	165	5110				

$M_{a\,max}$ = 200 Nm

n_a min^{-1}	i	F_{Ra} N	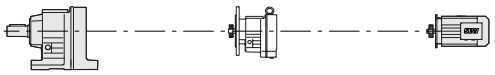			m kg
9.6	148	5110	**S47p** **SF47p** **SA47p** **SAF47p**	**R17**	**DRN71M4**	20 23 21 22
11	131	5120				

$M_{a\,max}$ = 300 Nm

n_a min^{-1}	i	F_{Ra} N	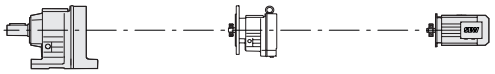			m kg
0.44	3131	7080	**S57** **SF57** **SA57** **SAF57**	**R17**	**DRN63MS4**	21 25 21 24
0.51	2714	7080				
0.57	2412	7080				
0.65	2131	7080				
0.74	1863	7080				
0.83	1663	7080				
0.96	1435	7080				
1.1	1254	7080				
1.3	1083	7080				
1.4	965	7080	**S57** **SF57** **SA57** **SAF57**	**R17**	**DRN63MS4**	21 25 21 23
1.6	865	7080				
1.8	750	7080				
2.1	655	7080				
2.4	574	7080	**S57** **SF57** **SA57** **SAF57**	**R17**	**DRN63M4**	22 25 21 24
2.7	506	7080				
3.1	438	7080				
3.6	388	7080	**S57** **SF57** **SA57** **SAF57**	**R17**	**DRN71MS4**	22 26 22 25
4.2	336	7080				
4.8	294	7080				
5.3	269	7080	**S57** **SF57** **SA57** **SAF57**	**R17**	**DRN71M4**	23 27 23 26
6.2	229	7080				
6.9	204	7080				
7.6	187	7080				
8.7	165	7080	**S57** **SF57** **SA57** **SAF57**	**R17**	**DRN80MK4**	26 29 25 28
11	131	7080				

$M_{a\,max}$ = 330 Nm

n_a min^{-1}	i	F_{Ra} N	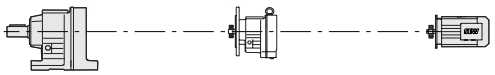			m kg
0.11	12909	6800	**S57** **SF57** **SA57** **SAF57**	**R17**	**DRN63MS4**	21 25 21 24
0.12	11189	6800				
0.13	10374	6800				
0.15	8992	6800				
0.18	7860	6800				
0.2	6887	6800				
0.23	6055	6800				
0.26	5292	6800				
0.3	4637	6800				
0.34	4092	6800				
0.38	3628	6800				

$M_{a\,max}$ = 360 Nm

n_a min^{-1}	i	F_{Ra} N	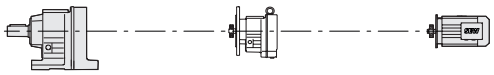			m kg
0.11	12909	6470	**S57p**	**R17**	**DRN63MS4**	21
			SF57p			25
0.13	10374	6470	**SA57p**			21
			SAF57p			24

$M_{a\,max}$ = 365 Nm

n_a min^{-1}	i	F_{Ra} N	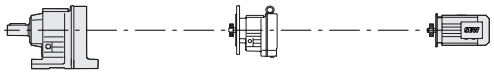			m kg
0.12	11189	6410				
0.15	8992	6410				
0.18	7860	6410	**S57p**			21
0.2	6887	6410	**SF57p**			25
0.23	6055	6410	**SA57p**	**R17**	**DRN63MS4**	21
0.26	5292	6410	**SAF57p**			24
0.3	4637	6410				
0.34	4092	6410				
0.38	3628	6410				

$M_{a\,max}$ = 370 Nm

n_a min^{-1}	i	F_{Ra} N	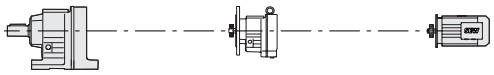			m kg
0.44	3131	6350				
0.51	2714	6350				
0.57	2412	6350				
0.65	2131	6350	**S57p**			21
0.74	1863	6350	**SF57p**			25
0.83	1663	6350	**SA57p**	**R17**	**DRN63MS4**	21
0.96	1435	6350	**SAF57p**			24
1.1	1254	6350				
1.3	1083	6350				
1.4	965	6350	**S57p**			21
1.6	865	6350	**SF57p**			25
1.8	750	6350	**SA57p**	**R17**	**DRN63MS4**	21
			SAF57p			23
2.1	655	6350	**S57p**			22
2.4	574	6350	**SF57p**			25
2.7	506	6350	**SA57p**	**R17**	**DRN63M4**	21
			SAF57p			24
3.2	438	6350	**S57p**			22
3.6	388	6350	**SF57p**			26
4.2	336	6350	**SA57p**	**R17**	**DRN71MS4**	22
			SAF57p			25
4.8	294	6350	**S57p**			23
5.3	269	6350	**SF57p**			27
6.2	229	6350	**SA57p**	**R17**	**DRN71M4**	23
6.9	204	6350	**SAF57p**			26
7.7	187	6350	**S57p**			26
8.7	165	6350	**SF57p**			29
11	131	6350	**SA57p**	**R17**	**DRN80MK4**	25
			SAF57p			28

$M_{a\,max}$ = 570 Nm

n_a min^{-1}	i	F_{Ra} N	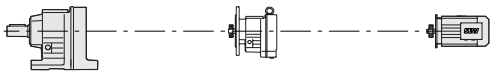			m kg
0.06	21362	8190				
0.07	19594	8190				
0.08	16682	8190				
0.08	18120	8190				
0.1	14383	8190				
0.11	12774	8190				
0.13	11013	8190				
0.14	9694	8190				
0.16	8529	8190				
0.19	7455	8190				
0.21	6531	8190	**S67**	**R37**	**DRN63MS4**	40
0.24	5759	8190	**SF67**			46
0.28	4965	8190	**SA67**			41
0.31	4410	8190	**SAF67**			45
0.36	3880	8190				
0.4	3432	8190				
0.47	2944	8190				
0.52	2630	8190				
0.61	2279	8190				
0.69	2014	8190				
0.78	1772	8190				
0.88	1559	8190				
1	1363	8190				
1.2	1194	8190				
			S67			40
1.3	1045	8190	**SF67**	**R37**	**DRN63M4**	47
1.5	914	8190	**SA67**			41
			SAF67			46
			S67			40
1.7	809	8190	**SF67**	**R37**	**DRN63M4**	47
1.9	712	8190	**SA67**			41
			SAF67			46
			S67			41
2.3	615	8190	**SF67**	**R37**	**DRN71MS4**	47
2.6	543	8190	**SA67**			42
			SAF67			46
			S67			42
3	469	8190	**SF67**	**R37**	**DRN71M4**	48
3.3	424	8190	**SA67**			43
3.9	365	8190	**SAF67**			47
			S67			44
4.5	319	8190	**SF67**	**R37**	**DRN80MK4**	51
5.1	281	8190	**SA67**			45
5.8	246	8190	**SAF67**			50
			S67			48
6.5	221	8190	**SF67**	**R37**	**DRN80M4**	54
7.3	198	8190	**SA67**			49
8.6	168	8190	**SAF67**			53
			S67			53
9.4	156	8190	**SF67**	**R37**	**DRN90S4**	60
			SA67			54
			SAF67			59

$M_{a\,max}$ = 640 Nm

n_a min^{-1}	i	F_{Ra} N	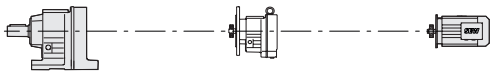			m kg
1.3	1045	9590	**S67p**	**R37**	**DRN63M4**	40
			SF67p			47
1.5	914	9590	**SA67p**			41
			SAF67p			46
6.5	221	9670	**S67p**	**R37**	**DRN80M4**	48
			SF67p			54
			SA67p			49
			SAF67p			53
9.4	156	9690	**S67p**	**R37**	**DRN90S4**	53
			SF67p			60
			SA67p			54
			SAF67p			59

$M_{a\,max}$ = 645 Nm

n_a min^{-1}	i	F_{Ra} N	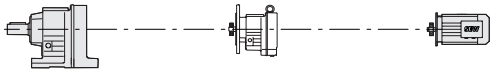			m kg
0.06	21362	10000	**S67p**	**R37**	**DRN63MS4**	40
0.07	19594	10000	**SF67p**			46
0.08	16682	10000	**SA67p**			41
0.08	18120	10000	**SAF67p**			45
0.1	14383	10000				
0.11	12774	10000				
0.13	11013	10000				
0.14	9694	10000				
0.16	8529	10000				
0.19	7455	10000				
0.21	6531	10000				

$M_{a\,max}$ = 660 Nm

n_a min^{-1}	i	F_{Ra} N	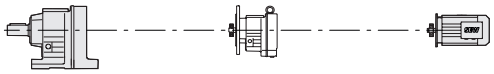			m kg
0.61	2279	9460	**S67p**	**R37**	**DRN63MS4**	40
			SF67p			46
			SA67p			41
			SAF67p			45
4.5	319	9530	**S67p**	**R37**	**DRN80MK4**	44
			SF67p			51
			SA67p			45
			SAF67p			50

$M_{a\,max}$ = 680 Nm

n_a min^{-1}	i	F_{Ra} N	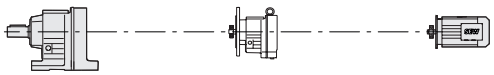			m kg
5.1	281	9420	**S67p**	**R37**	**DRN80MK4**	44
			SF67p			51
			SA67p			45
			SAF67p			50
7.3	198	9440	**S67p**	**R37**	**DRN80M4**	48
			SF67p			54
			SA67p			49
			SAF67p			53

$M_{a\,max}$ = 680 Nm

n_a min^{-1}	i	F_{Ra} N	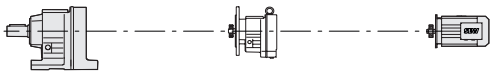			m kg
8.7	168	9450	**S67p** **SF67p** **SA67p** **SAF67p**	**R37**	**DRN90S4**	53 60 54 59

$M_{a\,max}$ = 700 Nm

n_a min^{-1}	i	F_{Ra} N	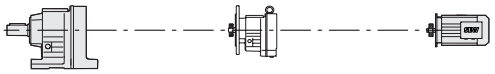			m kg
0.47 **0.88**	2944 1559	9220 9220	**S67p** **SF67p** **SA67p** **SAF67p**	**R37**	**DRN63MS4**	40 46 41 45
1	1363	9220	**S67p** **SF67p** **SA67p** **SAF67p**	**R37**	**DRN63M4**	40 47 41 46
2.6	543	9230	**S67p** **SF67p** **SA67p** **SAF67p**	**R37**	**DRN71M4**	42 48 43 47

$M_{a\,max}$ = 720 Nm

n_a min^{-1}	i	F_{Ra} N	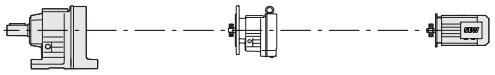			m kg
0.24 **0.28** **0.31** **0.36** **0.4** **0.52** **0.69** **0.78**	5759 4965 4410 3880 3432 2630 2014 1772	9100 9100 9100 9100 9100 9100 9100 9100	**S67p** **SF67p** **SA67p** **SAF67p**	**R37**	**DRN63MS4**	40 46 41 45
1.2	1194	9100	**S67p** **SF67p** **SA67p** **SAF67p**	**R37**	**DRN63M4**	40 47 41 46
1.7 **2**	809 712	9100 9100	**S67p** **SF67p** **SA67p** **SAF67p**	**R37**	**DRN71MS4**	41 47 42 46
2.3 **3** **3.3**	615 469 424	9100 9130 9140	**S67p** **SF67p** **SA67p** **SAF67p**	**R37**	**DRN71M4**	42 48 43 47
3.9	365	9160	**S67p** **SF67p** **SA67p** **SAF67p**	**R37**	**DRN80MK4**	44 51 45 50
5.9	246	9190	**S67p** **SF67p** **SA67p** **SAF67p**	**R37**	**DRN80M4**	48 54 49 53

$M_{a\,max}$ = 1240 Nm

n_a min^{-1}	i	F_{Ra} N	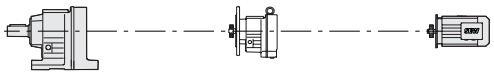			m kg
0.5	2753	12000	**S77**	**R37**	**DRN63MS4**	59
			SF77			68
0.58	2374	12000	**SA77**			58
			SAF77			65
0.66	2083	12000	**S77**	**R37**	**DRN63M4**	60
0.76	1813	12000	**SF77**			69
0.79	1745	12000	**SA77**			59
0.86	1600	12000	**SAF77**			66
1	1404	12000	**S77**	**R37**	**DRN71MS4**	60
			SF77			70
1.1	1245	12000	**SA77**			60
			SAF77			66
1.3	1100	12000	**S77**	**R37**	**DRN71MS4**	60
			SF77			70
			SA77			59
			SAF77			66
1.5	954	12000	**S77**	**R37**	**DRN71M4**	61
1.7	837	12000	**SF77**			71
2	714	12000	**SA77**			61
			SAF77			67
2.3	637	12000	**S77**	**R37**	**DRN80MK4**	63
2.5	574	12000	**SF77**			73
2.9	499	12000	**SA77**			63
			SAF77			70
3.3	438	12000	**S77**	**R37**	**DRN80M4**	67
			SF77			77
3.7	389	12000	**SA77**			66
			SAF77			73
4.4	327	12000	**S77**	**R37**	**DRN90S4**	73
5	289	12000	**SF77**			82
5.8	250	12000	**SA77**			72
			SAF77			79
6.7	219	12000	**S77**	**R37**	**DRN90L4**	76
			SF77			86
			SA77			75
			SAF77			82

$M_{a\,max}$ = 1270 Nm

n_a min^{-1}	i	F_{Ra} N	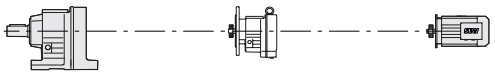			m kg
0.05	25493	11700				
0.06	21787	11700				
0.07	19907	11700				
0.08	17013	11700				
0.09	14668	11700				
0.11	13110	11700				
0.12	11569	11700	**S77**	**R37**	**DRN63MS4**	59
0.14	9887	11700	**SF77**			68
0.16	8817	11700	**SA77**			58
0.18	7735	11700	**SAF77**			65
0.2	6735	11700				
0.23	5943	11700				
0.26	5214	11700				
0.3	4618	11700				
0.35	3992	11700				
0.39	3540	11700				
0.44	3098	11700	**S77** **SF77** **SA77** **SAF77**	**R37**	**DRN63M4**	60 69 59 66

$M_{a\,max}$ = 1400 Nm

n_a min^{-1}	i	F_{Ra} N	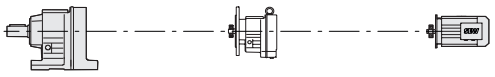			m kg
3.7	389	11800	**S77p** **SF77p** **SA77p** **SAF77p**	**R37**	**DRN80M4**	67 77 66 73
4.4	327	11800	**S77p** **SF77p** **SA77p** **SAF77p**	**R37**	**DRN90S4**	73 82 72 79

$M_{a\,max}$ = 1440 Nm

n_a min^{-1}	i	F_{Ra} N	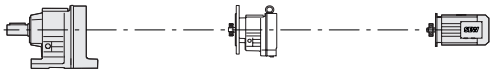			m kg
0.5	2753	11500	**S77p** **SF77p** **SA77p** **SAF77p**	**R37**	**DRN63MS4**	59 68 58 65
0.58	2374	11500	**S77p** **SF77p** **SA77p** **SAF77p**	**R37**	**DRN63M4**	60 69 59 66
0.66	2083	11500				
0.76	1813	11500				
0.88	1600	11500	**S77p** **SF77p** **SA77p** **SAF77p**	**R37**	**DRN71MS4**	60 70 60 66
1	1404	11500				
1.1	1245	11500				
1.3	1100	11500	**S77p** **SF77p** **SA77p** **SAF77p**	**R37**	**DRN71M4**	61 71 61 67
1.5	954	11500				
1.7	837	11500				

$M_{a\,max}$ = 1440 Nm

n_a min^{-1}	i	F_{Ra} N	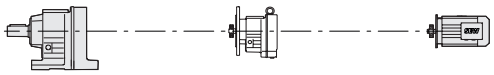			m kg
2.5	574	11500	**S77p** **SF77p** **SA77p** **SAF77p**	**R37**	**DRN80MK4**	63 73 63 70
2.9 **3.3**	499 438	11600 11600	**S77p** **SF77p** **SA77p** **SAF77p**	**R37**	**DRN80M4**	67 77 66 73
5 **5.8**	289 250	11700 11700	**S77p** **SF77p** **SA77p** **SAF77p**	**R37**	**DRN90S4**	73 82 72 79
6.7	219	11700	**S77p** **SF77p** **SA77p** **SAF77p**	**R37**	**DRN90L4**	76 86 75 82

$M_{a\,max}$ = 1450 Nm

n_a min^{-1}	i	F_{Ra} N	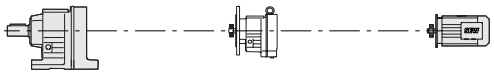			m kg
0.79	1745	11500	**S77p** **SF77p** **SA77p** **SAF77p**	**R37**	**DRN63M4**	60 69 59 66
2 **2.3**	714 637	11500 11500	**S77p** **SF77p** **SA77p** **SAF77p**	**R37**	**DRN80MK4**	63 73 63 70

$M_{a\,max}$ = 1500 Nm

n_a min^{-1}	i	F_{Ra} N	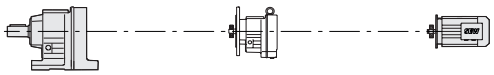			m kg
0.05	25493	12200				
0.06	21787	12200				
0.07	19907	12200				
0.08	17013	12200				
0.09	14668	12200				
0.11	13110	12200				
0.12	11569	12200	**S77p**			59
0.14	9887	12200	**SF77p**	**R37**	**DRN63MS4**	68
0.16	8817	12200	**SA77p**			58
0.18	7735	12200	**SAF77p**			65
0.2	6735	12200				
0.23	5943	12200				
0.26	5214	12200				
0.3	4618	12200				
0.35	3992	12200				
0.39	3540	12200	**S77p** **SF77p**	**R37**	**DRN63M4**	60 69
0.44	3098	12200	**SA77p** **SAF77p**			59 66

$M_{a\,max}$ = 1980 Nm

n_a min^{-1}	i	F_{Ra} N	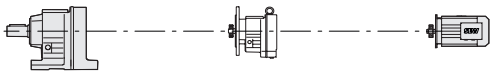			m kg
5.7	255	28400	**S87**	**R57**	**DRN100LS4**	130
6.5	222	28400	**SF87**			150
7.1	205	28400	**SA87**			125
			SAF87			145

$M_{a\,max}$ = 2400 Nm

n_a min^{-1}	i	F_{Ra} N	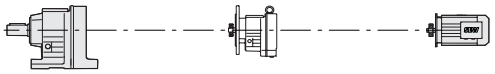			m kg
4.5	323	27700	**S87**	**R57**	**DRN100LS4**	130
5.2	281	27700	**SF87**			150
			SA87			125
			SAF87			145

$M_{a\,max}$ = 2450 Nm

n_a min^{-1}	i	F_{Ra} N	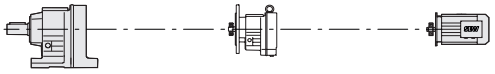			m kg
3.4	435	27600	**S87**	**R57**	**DRN90L4**	125
			SF87			145
			SA87			125
			SAF87			140
3.8	378	27600	**S87**	**R57**	**DRN100LS4**	130
			SF87			150
			SA87			125
			SAF87			145

$M_{a\,max}$ = 2500 Nm

n_a min^{-1}	i	F_{Ra} N	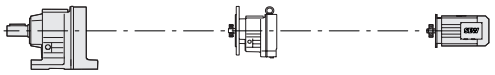			m kg
0.05	25987	27500				
0.06	23940	27500				
0.07	20568	27500				
0.08	16774	27500				
0.08	18265	27500	**S87**	**R57**	**DRN63MS4**	110
0.09	14820	27500	**SF87**			130
0.1	13160	27500	**SA87**			105
0.12	11200	27500	**SAF87**			120
0.14	9904	27500				
0.16	8549	27500				
0.18	7643	27500				
0.21	6706	27500				
0.23	5875	27500	**S87**	**R57**	**DRN63M4**	110
0.27	5187	27500	**SF87**			130
0.3	4606	27500	**SA87**			105
			SAF87			125
0.36	3872	27500	**S87**	**R57**	**DRN71MS4**	110
			SF87			130
			SA87			105
			SAF87			125
0.4	3475	27500	**S87**	**R57**	**DRN71MS4**	110
0.48	2905	27500	**SF87**			130
			SA87			105
			SAF87			120

$M_{a\,max}$ = 2500 Nm

n_a min^{-1}	i	F_{Ra} N	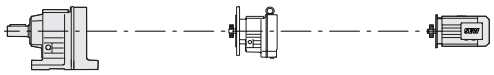			m kg
0.55	2586	27500	**S87**	**R57**	**DRN71M4**	110
0.61	2335	27500	**SF87**			130
0.69	2054	27500	**SA87**			105
			SAF87			125
0.79	1824	27500	**S87**	**R57**	**DRN80MK4**	110
0.88	1631	27500	**SF87**			135
1.1	1332	27500	**SA87**			110
			SAF87			125
1.2	1191	27500	**S87**	**R57**	**DRN80M4**	115
1.4	1032	27500	**SF87**			135
1.6	930	27500	**SA87**			115
			SAF87			130
1.8	831	27500	**S87**	**R57**	**DRN90S4**	120
2	719	27500	**SF87**			145
2.3	624	27500	**SA87**			120
			SAF87			135
2.6	558	27500	**S87**	**R57**	**DRN90L4**	125
3	485	27500	**SF87**			145
			SA87			125
			SAF87			140

$M_{a\,max}$ = 2590 Nm

n_a min^{-1}	i	F_{Ra} N	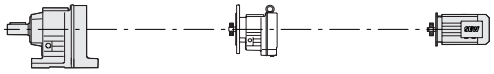			m kg
5.7	255	27000	**S87p**	**R57**	**DRN100LS4**	130
			SF87p			150
			SA87p			125
			SAF87p			145
7.1	205	27100	**S87p**	**R57**	**DRN100L4**	135
			SF87p			160
			SA87p			135
			SAF87p			150

$M_{a\,max}$ = 2660 Nm

n_a min^{-1}	i	F_{Ra} N	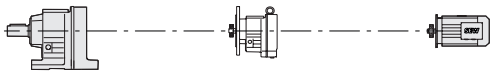			m kg
6.5	222	26000	**S87p**	**R57**	**DRN100LS4**	130
			SF87p			150
			SA87p			125
			SAF87p			145

$M_{a\,max}$ = 2900 Nm

n_a min^{-1}	i	F_{Ra} N	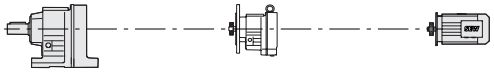			m kg
0.14	9904	23200	**S87p**	**R57**	**DRN63MS4**	110
			SF87p			130
			SA87p			105
			SAF87p			120
3.4	435	23200	**S87p**	**R57**	**DRN90L4**	125
			SF87p			145
			SA87p			125
			SAF87p			140

$M_{a\,max}$ = 2900 Nm

n_a min^{-1}	i	F_{Ra} N	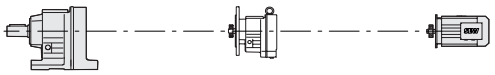			m kg
3.8	378	23200	**S87p**	**R57**	**DRN100LS4**	130
4.5	323	23200	**SF87p**			150
5.2	281	23200	**SA87p**			125
			SAF87p			145

$M_{a\,max}$ = 2950 Nm

n_a min^{-1}	i	F_{Ra} N	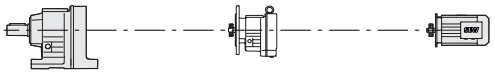			m kg
0.18	7643	21600	**S87p**	**R57**	**DRN63MS4**	110
			SF87p			130
			SA87p			105
			SAF87p			120
0.23	5875	21600	**S87p**	**R57**	**DRN63M4**	110
			SF87p			130
			SA87p			105
			SAF87p			125
0.36	3872	21600	**S87p**	**R57**	**DRN71MS4**	110
			SF87p			130
			SA87p			105
			SAF87p			125
0.49	2905	21600	**S87p**	**R57**	**DRN71M4**	110
			SF87p			130
			SA87p			105
			SAF87p			125
0.88	1631	21600	**S87p**	**R57**	**DRN80MK4**	110
			SF87p			135
			SA87p			110
			SAF87p			125
1.2	1191	21600	**S87p**	**R57**	**DRN80M4**	115
1.4	1032	21600	**SF87p**			135
			SA87p			115
			SAF87p			130
1.8	831	21600	**S87p**	**R57**	**DRN90S4**	120
			SF87p			145
			SA87p			120
			SAF87p			135
2.6	558	21600	**S87p**	**R57**	**DRN90L4**	125
3	485	21600	**SF87p**			145
			SA87p			125
			SAF87p			140

$M_{a\,max}$ = 3000 Nm

n_a min^{-1}	i	F_{Ra} N	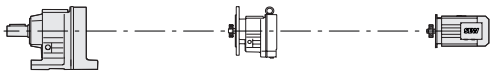			m kg
0.05	25987	19800				
0.06	23940	19800				
0.07	20568	19800				
0.08	16774	19800	**S87p**	**R57**	**DRN63MS4**	110
0.08	18265	19800	**SF87p**			130
0.09	14820	19800	**SA87p**			105
0.1	13160	19800	**SAF87p**			120
0.12	11200	19800				
0.16	8549	19800				

$M_{a\,max}$ = 3000 Nm

n_a min^{-1}	i	F_{Ra} N	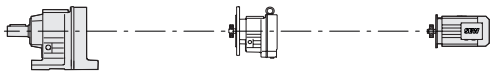			m kg
0.21	6706	19800	**S87p**	**R57**	**DRN63M4**	110
0.27	5187	19800	**SF87p**			130
			SA87p			105
			SAF87p			125
0.31	4606	19800	**S87p**	**R57**	**DRN71MS4**	110
			SF87p			130
			SA87p			105
			SAF87p			125
0.4	3475	19800	**S87p**	**R57**	**DRN71MS4**	110
			SF87p			130
			SA87p			105
			SAF87p			120
0.55	2586	19800	**S87p**	**R57**	**DRN71M4**	110
0.61	2335	19800	**SF87p**			130
			SA87p			105
			SAF87p			125
0.7	2054	19800	**S87p**	**R57**	**DRN80MK4**	110
0.79	1824	19800	**SF87p**			135
1.1	1332	19800	**SA87p**			110
			SAF87p			125
1.6	930	19800	**S87p**	**R57**	**DRN80M4**	115
			SF87p			135
			SA87p			115
			SAF87p			130
2	719	19800	**S87p**	**R57**	**DRN90S4**	120
2.3	624	19800	**SF87p**			145
			SA87p			120
			SAF87p			135

$M_{a\,max}$ = 4200 Nm

n_a min^{-1}	i	F_{Ra} N	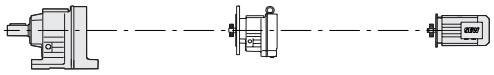			m kg
0.04	31154	25200	**S97**	**R57**	**DRN63MS4**	170
0.04	33818	25200	**SF97**			200
0.05	27847	25200	**SA97**			165
0.06	21537	25200	**SAF97**			190
0.06	24641	25200				
0.07	18749	25200				
0.09	14576	25200				
0.09	16233	25200				
0.11	12752	25200				
0.12	11267	25200				
0.14	10078	25200				
0.16	8608	25200	**S97**	**R57**	**DRN63M4**	170
0.18	7554	25200	**SF97**			200
0.21	6640	20300	**SA97**			165
0.24	5780	20300	**SAF97**			190
0.28	4937	20300				
0.32	4444	20300	**S97**	**R57**	**DRN71MS4**	170
0.35	4017	20300	**SF97**			200
0.41	3453	20300	**SA97**			165
			SAF97			190

$M_{a\,max}$ = 4200 Nm

n_a min^{-1}	i	F_{Ra} N	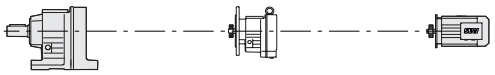			m kg
0.46	3108	20300	**S97**	**R57**	**DRN71M4**	170
0.53	2654	20300	**SF97**			205
0.61	2329	20300	**SA97**			165
			SAF97			190
0.69	2081	20300	**S97**	**R57**	**DRN80MK4**	175
0.77	1860	20300	**SF97**			205
0.91	1574	20300	**SA97**			170
			SAF97			195
1	1394	20300	**S97**	**R57**	**DRN80M4**	175
1.2	1223	20300	**SF97**			210
			SA97			170
			SAF97			195
1.4	1070	20300	**S97**	**R57**	**DRN90S4**	180
1.6	928	20300	**SF97**			215
1.8	824	20300	**SA97**			175
			SAF97			200
2.1	714	25400	**S97**	**R57**	**DRN90L4**	185
2.3	626	20300	**SF97**			220
			SA97			180
			SAF97			205
2.7	538	20400	**S97**	**R57**	**DRN100LS4**	190
3	484	20400	**SF97**			220
3.5	420	20400	**SA97**			185
3.9	376	20500	**SAF97**			210
4.5	327	20500	**S97**	**R57**	**DRN100L4**	195
5.1	287	20600	**SF97**			230
			SA97			190
			SAF97			215
5.8	252	20600	**S97**	**R57**	**DRN112M4**	205
6.7	219	20700	**SF97**			240
7.1	205	20700	**SA97**			200
			SAF97			225

$M_{a\,max}$ = 4300 Nm

n_a min^{-1}	i	F_{Ra} N	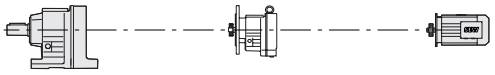			m kg
0.04	31154	23600	**S97p**	**R57**	**DRN63MS4**	170
0.04	33818	23600	**SF97p**			200
0.05	27847	23600	**SA97p**			165
0.06	21537	23600	**SAF97p**			190
0.06	24641	23600				
0.07	18749	23600				
0.09	14576	23600				
0.09	16233	23600				
0.11	12752	23600				
0.12	11267	23600				
0.14	10078	23600				
0.16	8608	23600	**S97p**	**R57**	**DRN63M4**	170
0.18	7554	23600	**SF97p**			200
0.21	6640	18700	**SA97p**			165
0.24	5780	18700	**SAF97p**			190
0.28	4937	18700				

$M_{a\,max}$ = 4300 Nm

n_a min^{-1}	i	F_{Ra} N	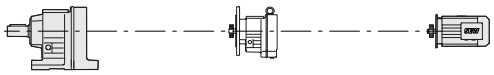			m kg
0.32	4444	18700	**S97p**	**R57**	**DRN71MS4**	170
0.35	4017	18700	**SF97p**			200
0.41	3453	18700	**SA97p**			165
			SAF97p			190
0.46	3108	18700	**S97p**	**R57**	**DRN71M4**	170
0.53	2654	18700	**SF97p**			205
0.61	2329	18700	**SA97p**			165
			SAF97p			190
0.69	2081	18700	**S97p**	**R57**	**DRN80MK4**	175
0.77	1860	18700	**SF97p**			205
0.91	1574	18700	**SA97p**			170
			SAF97p			195
1	1394	18700	**S97p**	**R57**	**DRN80M4**	175
1.2	1223	18700	**SF97p**			210
			SA97p			170
			SAF97p			195
1.4	1070	18700	**S97p**	**R57**	**DRN90S4**	180
1.6	928	18700	**SF97p**			215
1.8	824	18800	**SA97p**			175
			SAF97p			200
2.1	714	24200	**S97p**	**R57**	**DRN90L4**	185
2.3	626	19000	**SF97p**			220
2.7	538	19100	**SA97p**			180
			SAF97p			205
3	484	19200	**S97p**	**R57**	**DRN100LS4**	190
3.5	420	19300	**SF97p**			220
3.9	376	19400	**SA97p**			185
			SAF97p			210
4.5	327	19400	**S97p**	**R57**	**DRN100L4**	195
5.1	287	19500	**SF97p**			230
5.8	252	19600	**SA97p**			190
			SAF97p			215
6.7	219	19600	**S97p**	**R57**	**DRN112M4**	205
7.1	205	19600	**SF97p**			240
			SA97p			200
			SAF97p			225

4.5.4 Dimension sheets S..DRN..

02 047 02 16

S37/S37p..

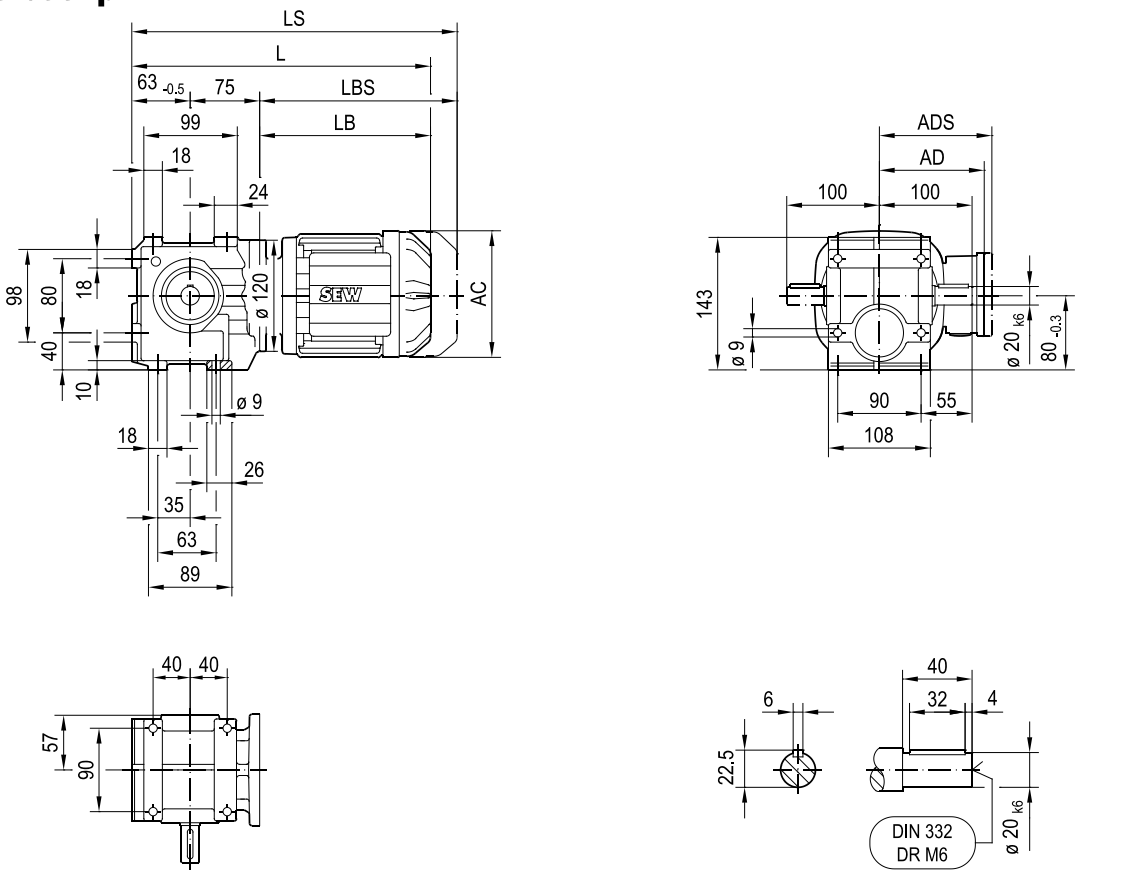

(→ 📖 4.1)	DRN								
	63MS	63M	71MS	71M	80MK	80MS	80M	90S	90L
AC	115	115	139	139	156	156	156	179	179
AD	98	98	118	118	128	128	128	140	140
ADS	98	98	129	129	139	139	139	150	150
L	328	342	344	364	375	392	421	422	454
LS	384	398	411	431	456	473	502	516	548
LB	190	204	206	226	237	254	283	284	316
LBS	246	260	273	293	318	335	364	378	410

02 048 02 16

SF37/SF37p..

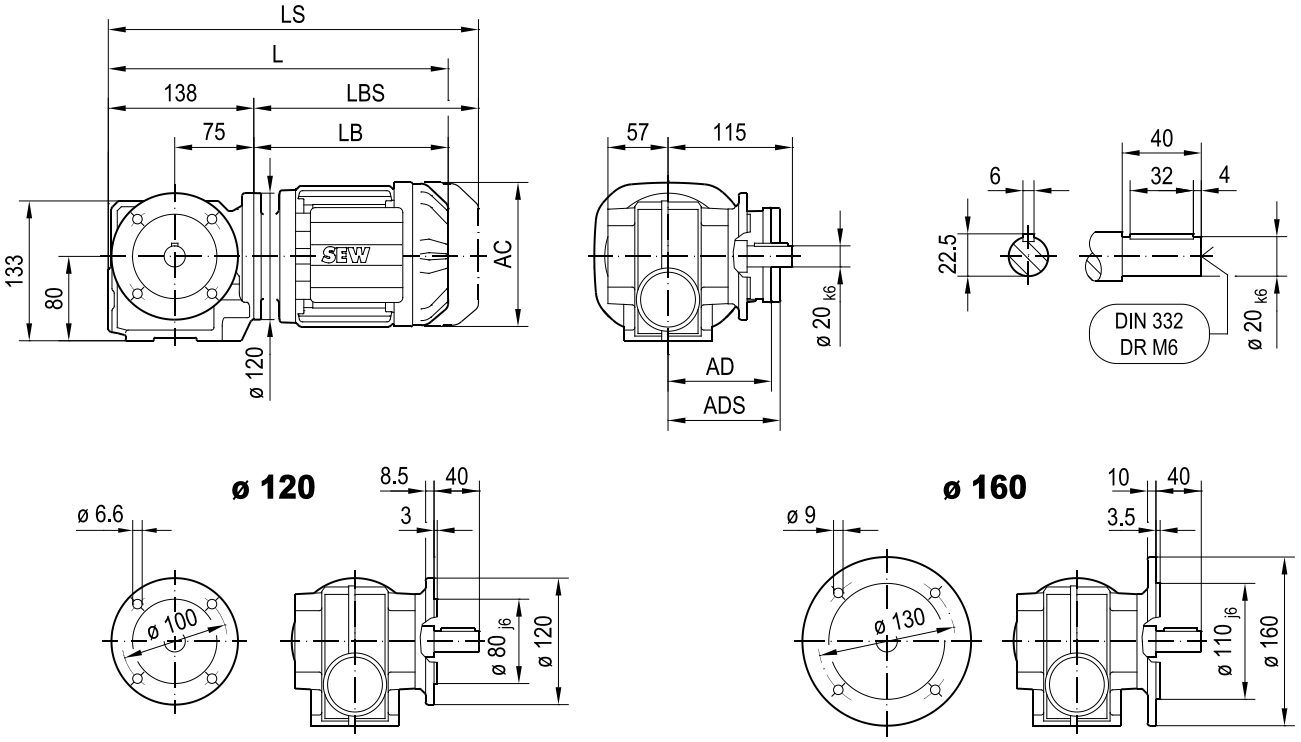

SAF37/SAF37p..

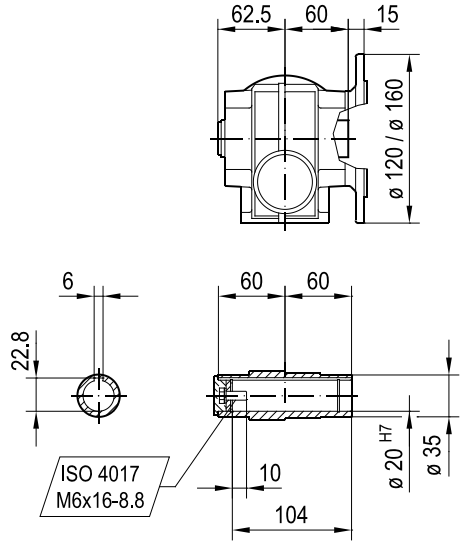

SHF37/SHF37p..

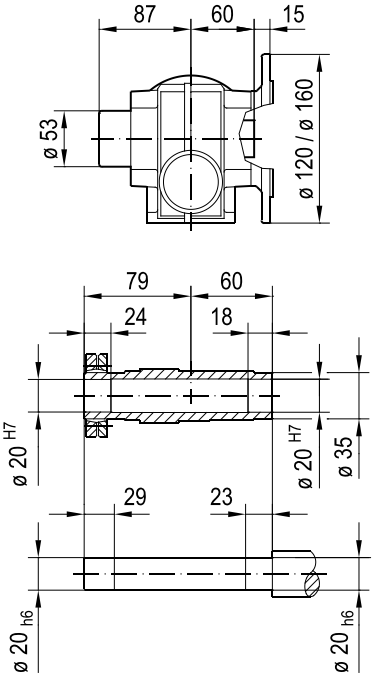

(→ 📖 4.1)	DRN								
	63MS	63M	71MS	71M	80MK	80MS	80M	90S	90L
AC	115	115	139	139	156	156	156	179	179
AD	98	98	118	118	128	128	128	140	140
ADS	98	98	129	129	139	139	139	150	150
L	328	342	344	364	375	392	421	422	454
LS	384	398	411	431	456	473	502	516	548
LB	190	204	206	226	237	254	283	284	316
LBS	246	260	273	293	318	335	364	378	410

02 049 03 16

SA37/SA37p..

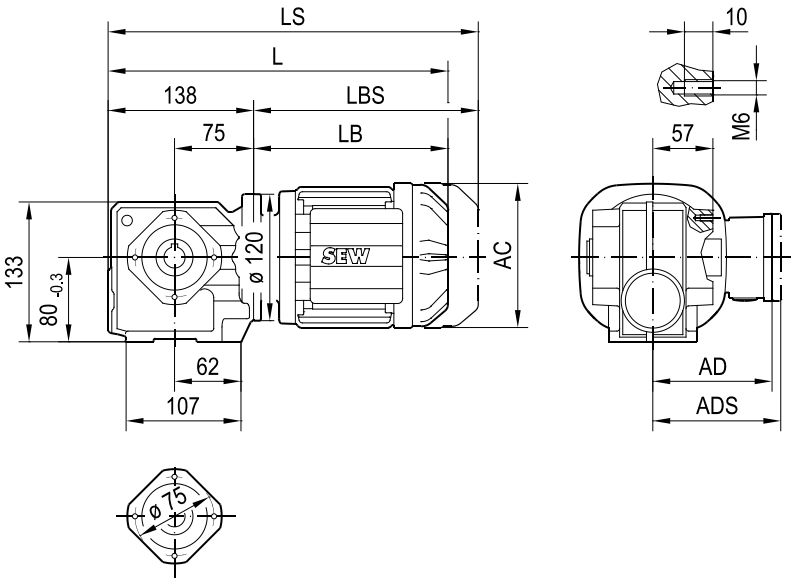

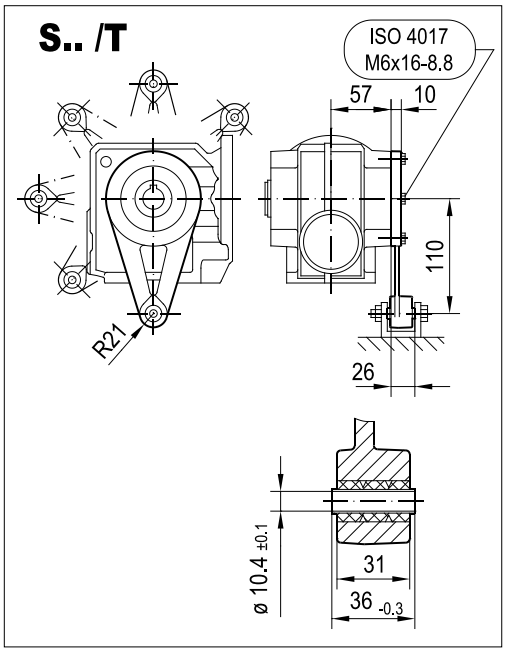

SA37/SA37p..

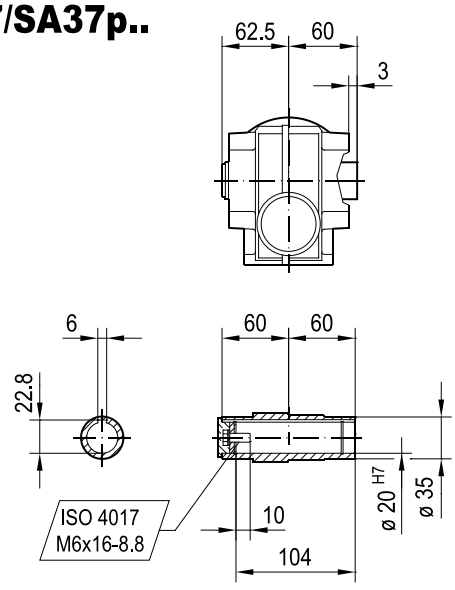

SH37/SH37p..

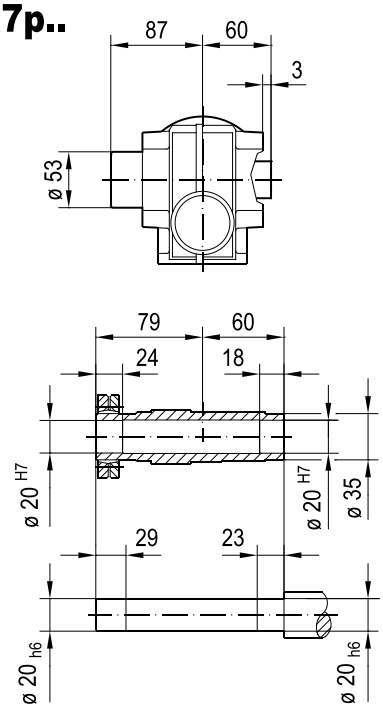

(→ 📖 4.1)	DRN								
	63MS	63M	71MS	71M	80MK	80MS	80M	90S	90L
AC	115	115	139	139	156	156	156	179	179
AD	98	98	118	118	128	128	128	140	140
ADS	98	98	129	129	139	139	139	150	150
L	328	342	344	364	375	392	421	422	454
LS	384	398	411	431	456	473	502	516	548
LB	190	204	206	226	237	254	283	284	316
LBS	246	260	273	293	318	335	364	378	410

02 050 04 16

ST37/ST37p..

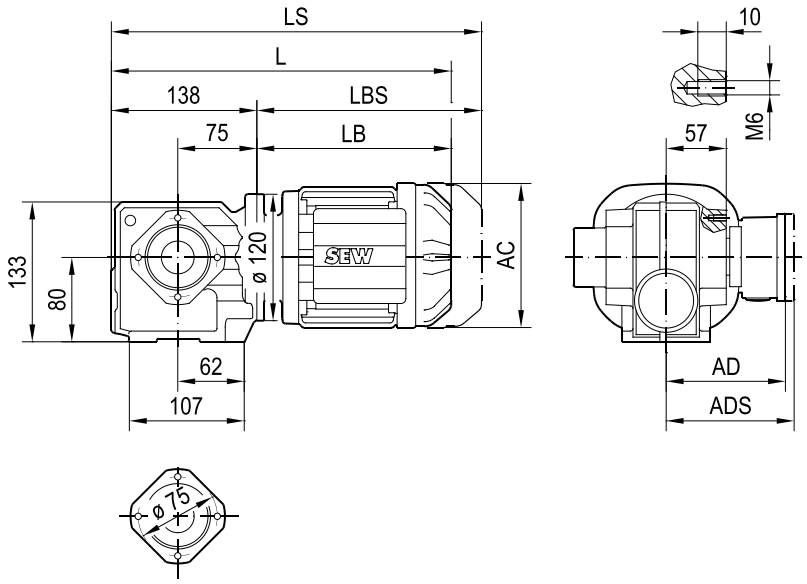

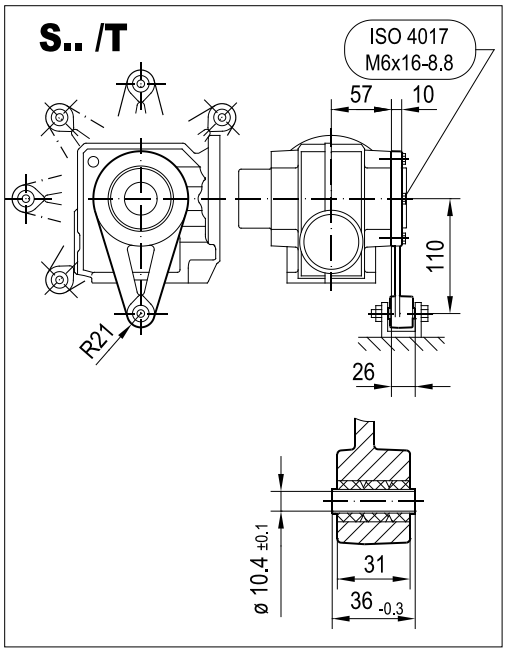

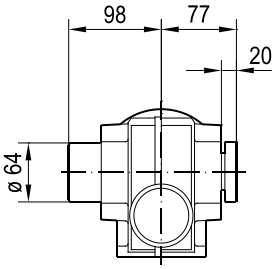

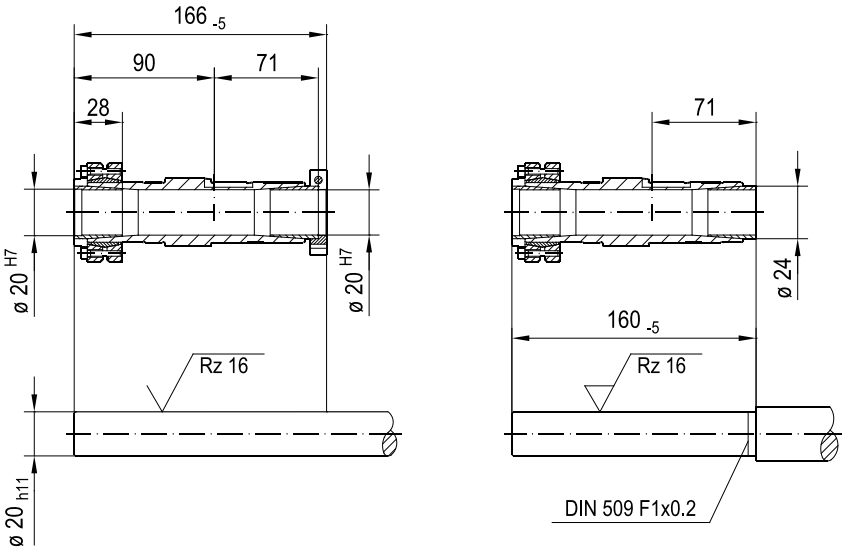

(→ 📖 4.1)	DRN								
	63MS	63M	71MS	71M	80MK	80MS	80M	90S	90L
AC	115	115	139	139	156	156	156	179	179
AD	98	98	118	118	128	128	128	140	140
ADS	98	98	129	129	139	139	139	150	150
L	328	342	344	364	375	392	421	422	454
LS	384	398	411	431	456	473	502	516	548
LB	190	204	206	226	237	254	283	284	316
LBS	246	260	273	293	318	335	364	378	410

02 051 02 16

S47/S47p..

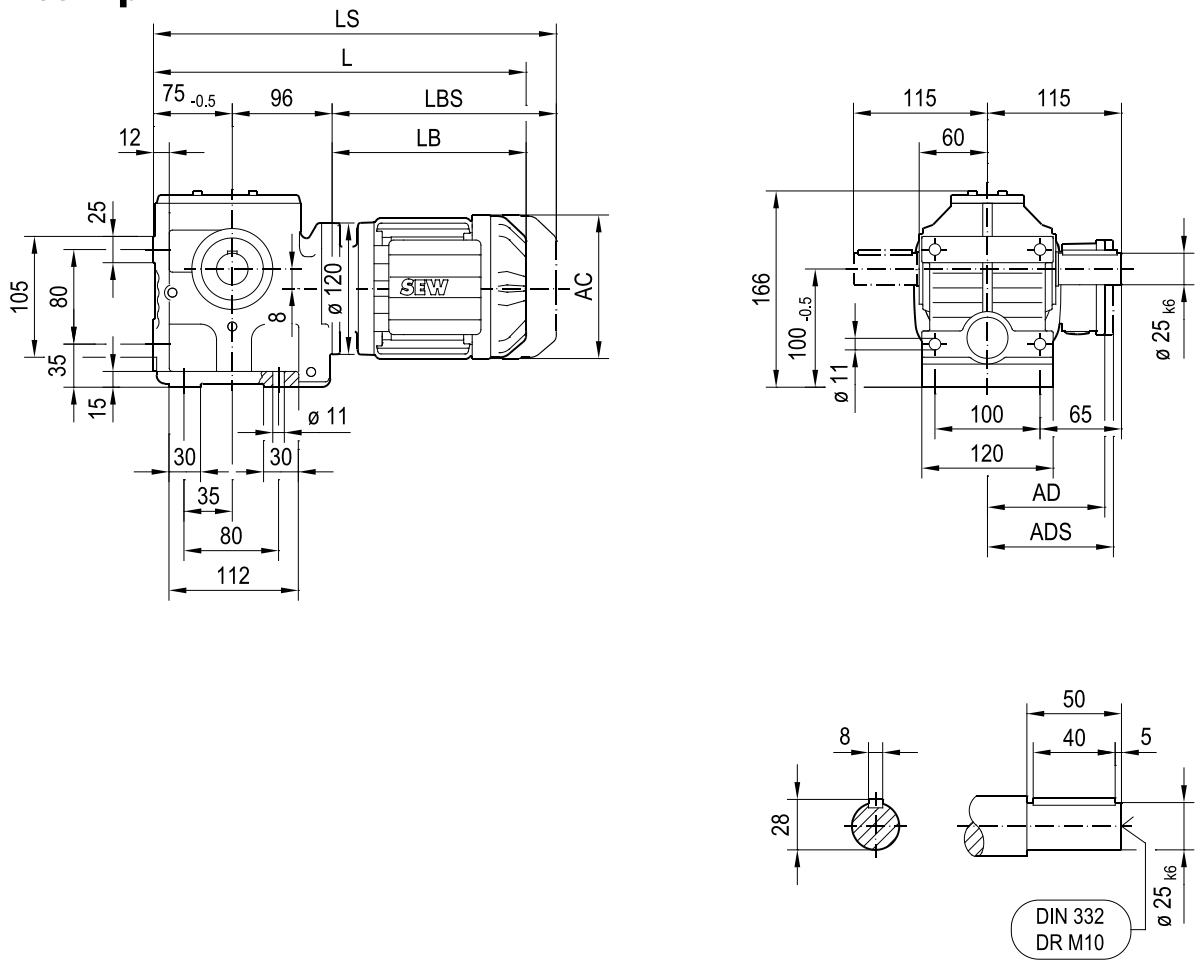

(→ 📖 4.1)	DRN										
	63MS	63M	71MS	71M	80MK	80MS	80M	90S	90L	100LS	100L/LM
AC	115	115	139	139	156	156	156	179	179	197	197
AD	98	98	118	118	128	128	128	140	140	157	157
ADS	98	98	129	129	139	139	139	150	150	158	158
L	361	375	377	397	408	425	454	455	487	485	535
LS	417	431	444	464	489	506	535	549	581	579	629
LB	190	204	206	226	237	254	283	284	316	314	364
LBS	246	260	273	293	318	335	364	378	410	408	458

02 052 01 16

SF47/SF47p..

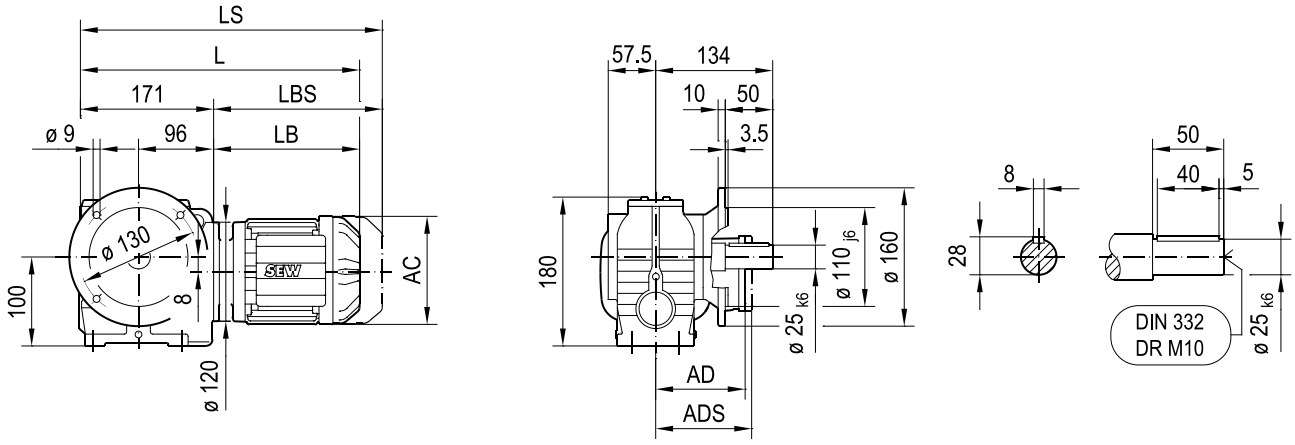

SAF47/SAF47p..

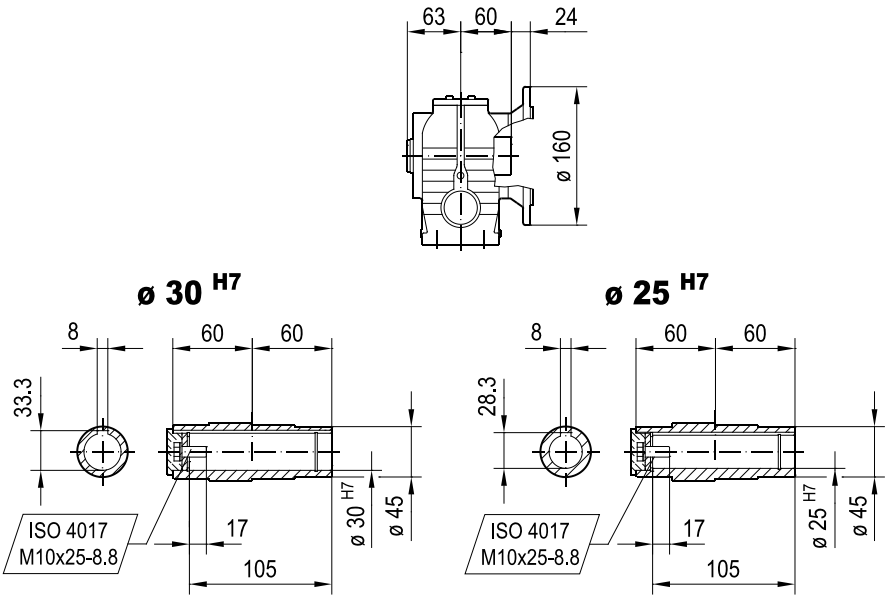

SHF47/SHF47p..

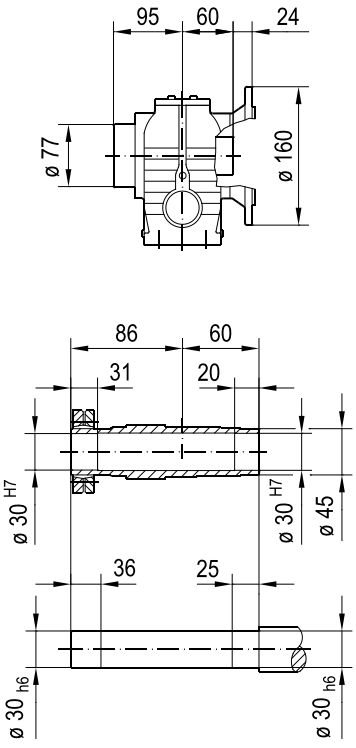

(→ 📖 4.1)	DRN										
	63MS	63M	71MS	71M	80MK	80MS	80M	90S	90L	100LS	100L/LM
AC	115	115	139	139	156	156	156	179	179	197	197
AD	98	98	118	118	128	128	128	140	140	157	157
ADS	98	98	129	129	139	139	139	150	150	158	158
L	361	375	377	397	408	425	454	455	487	485	535
LS	417	431	444	464	489	506	535	549	581	579	629
LB	190	204	206	226	237	254	283	284	316	314	364
LBS	246	260	273	293	318	335	364	378	410	408	458

02 053 01 16

SA47/SA47p..

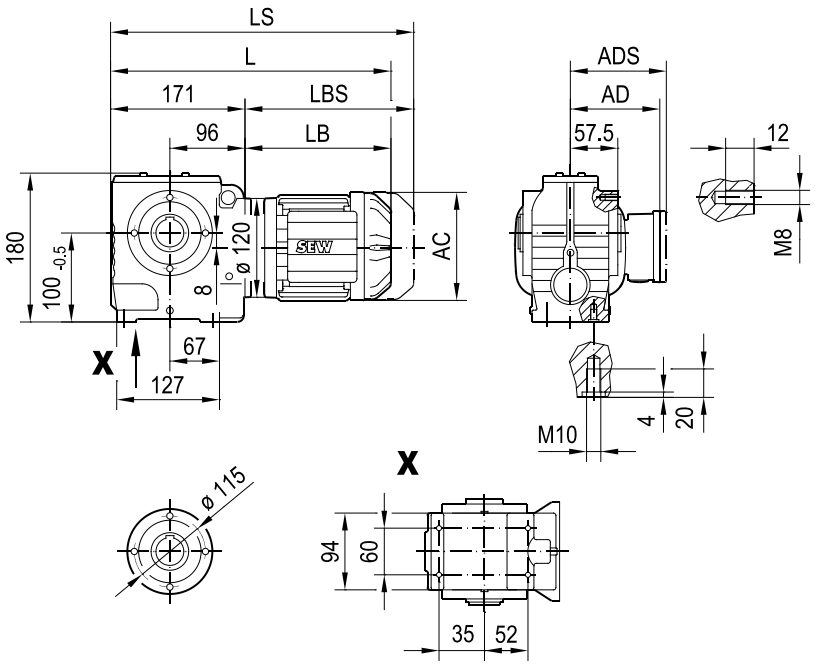

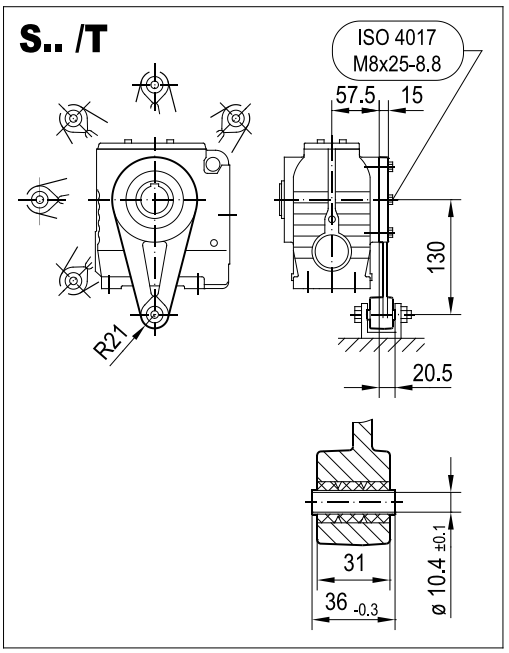

SA47/SA47p..

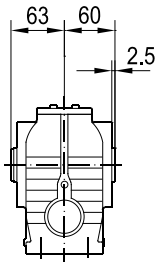

ø 30 H7

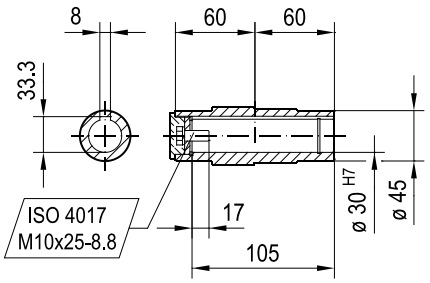

ø 25 H7

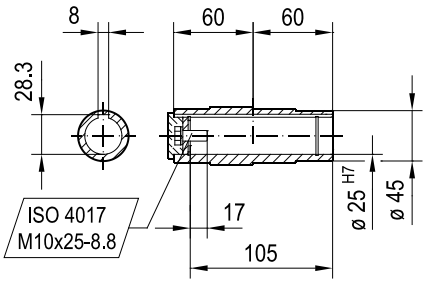

SH47/SH47p..

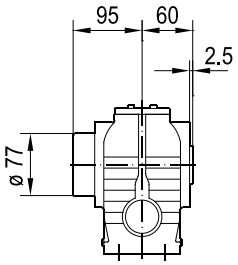

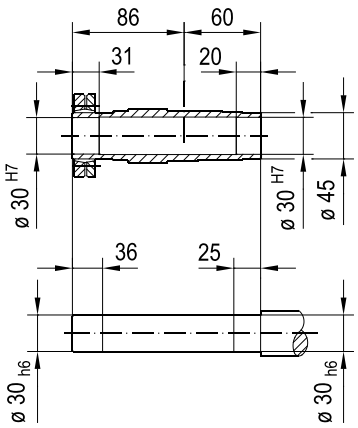

(→ 📖 4.1)	DRN										
	63MS	63M	71MS	71M	80MK	80MS	80M	90S	90L	100LS	100L/LM
AC	115	115	139	139	156	156	156	179	179	197	197
AD	98	98	118	118	128	128	128	140	140	157	157
ADS	98	98	129	129	139	139	139	150	150	158	158
L	361	375	377	397	408	425	454	455	487	485	535
LS	417	431	444	464	489	506	535	549	581	579	629
LB	190	204	206	226	237	254	283	284	316	314	364
LBS	246	260	273	293	318	335	364	378	410	408	458

SAZ47/SAZ47p..

02 054 01 16

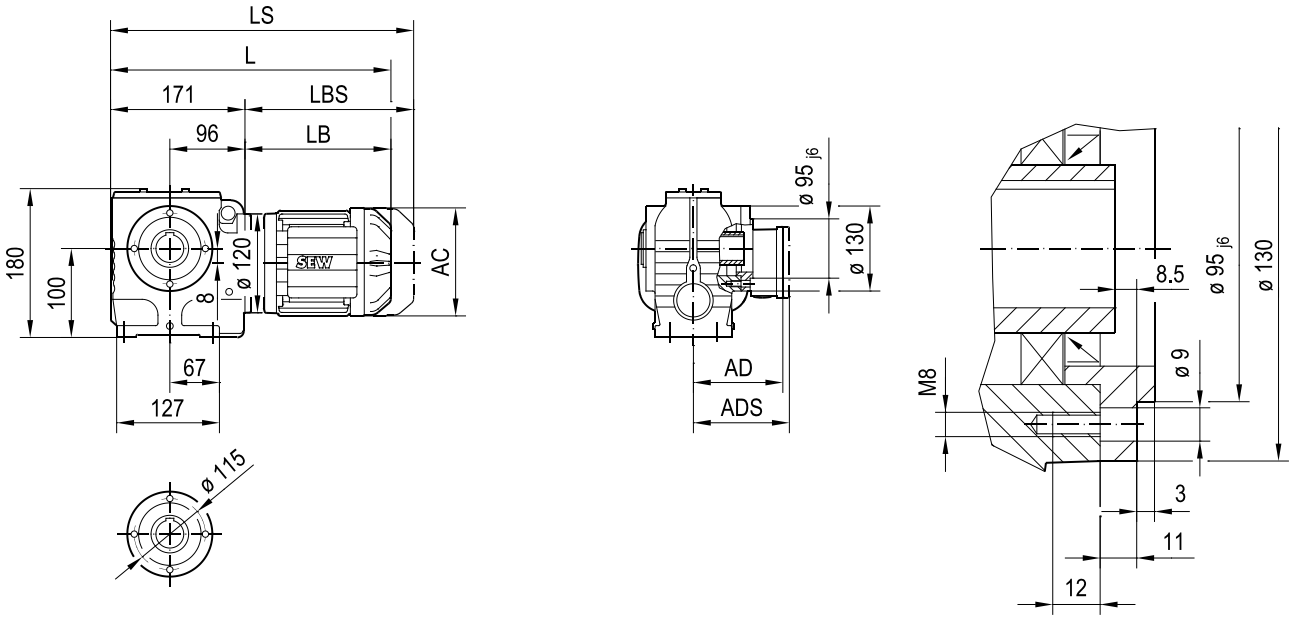

SAZ47/SAZ47p..

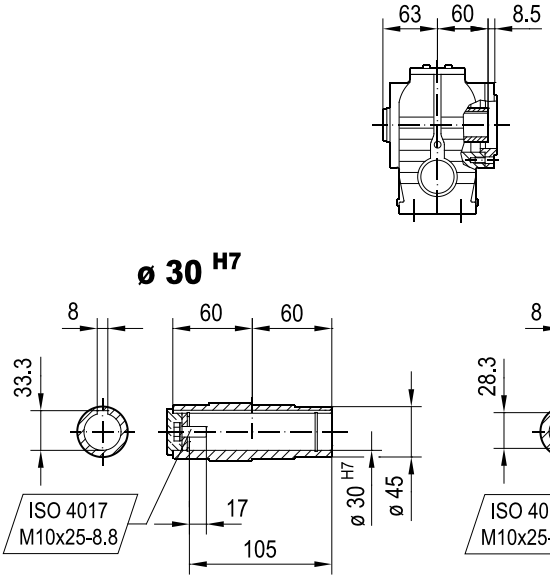

SHZ47/SHZ47p..

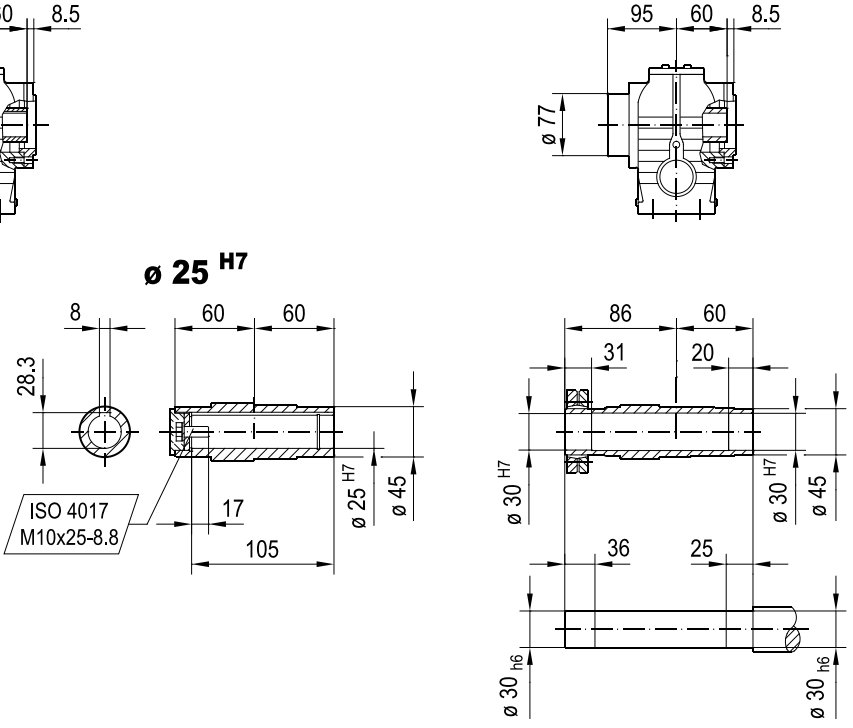

(→ 📖 4.1)	DRN										
	63MS	63M	71MS	71M	80MK	80MS	80M	90S	90L	100LS	100L/LM
AC	115	115	139	139	156	156	156	179	179	197	197
AD	98	98	118	118	128	128	128	140	140	157	157
ADS	98	98	129	129	139	139	139	150	150	158	158
L	361	375	377	397	408	425	454	455	487	485	535
LS	417	431	444	464	489	506	535	549	581	579	629
LB	190	204	206	226	237	254	283	284	316	314	364
LBS	246	260	273	293	318	335	364	378	410	408	458

02 055 02 16

ST47/ST47p..

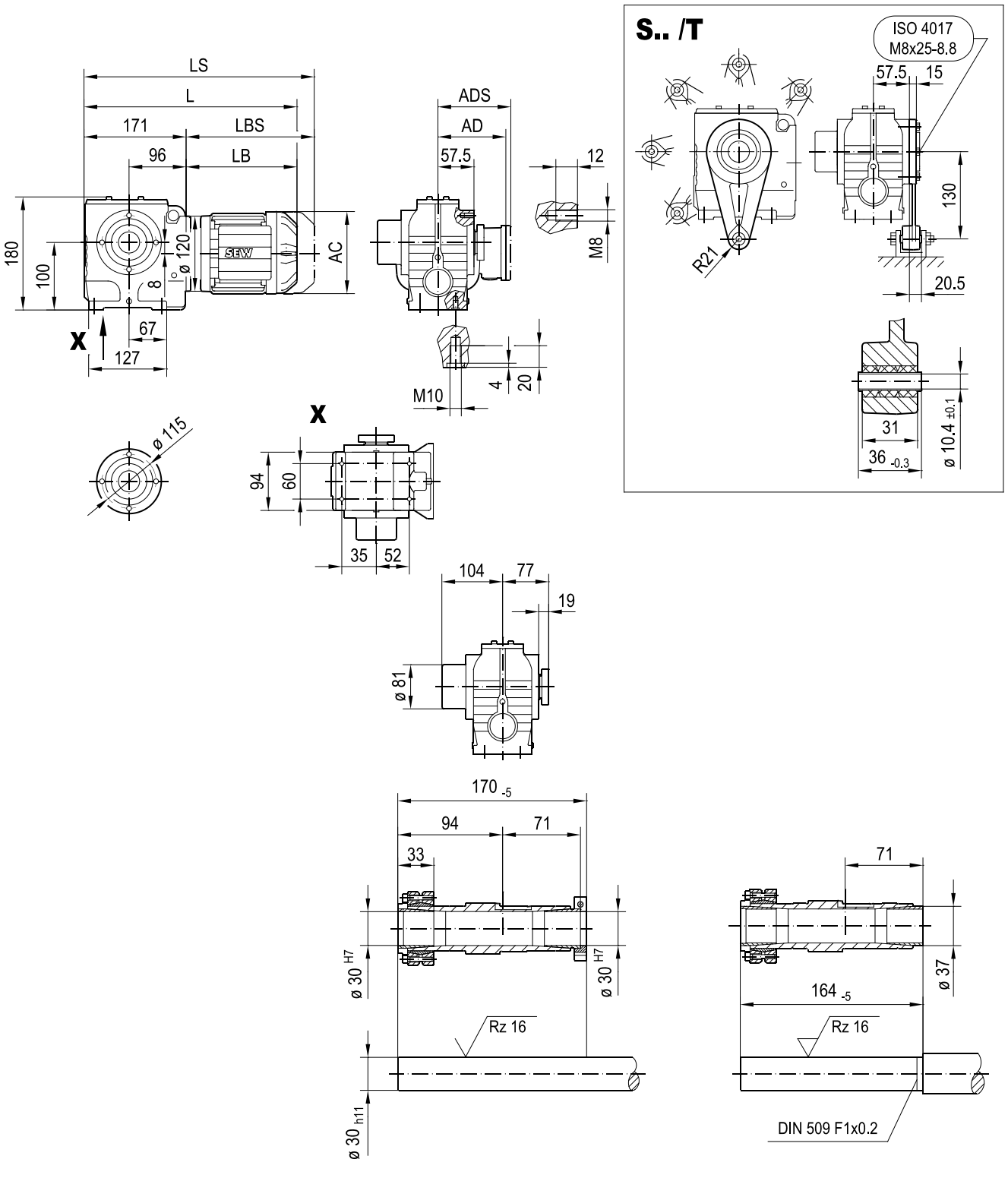

(→ 📖 4.1)	DRN										
	63MS	63M	71MS	71M	80MK	80MS	80M	90S	90L	100LS	100L/LM
AC	115	115	139	139	156	156	156	179	179	197	197
AD	98	98	118	118	128	128	128	140	140	157	157
ADS	98	98	129	129	139	139	139	150	150	158	158
L	361	375	377	397	408	425	454	455	487	485	535
LS	417	431	444	464	489	506	535	549	581	579	629
LB	190	204	206	226	237	254	283	284	316	314	364
LBS	246	260	273	293	318	335	364	378	410	408	458

02 017 01 14

S57/S57p..

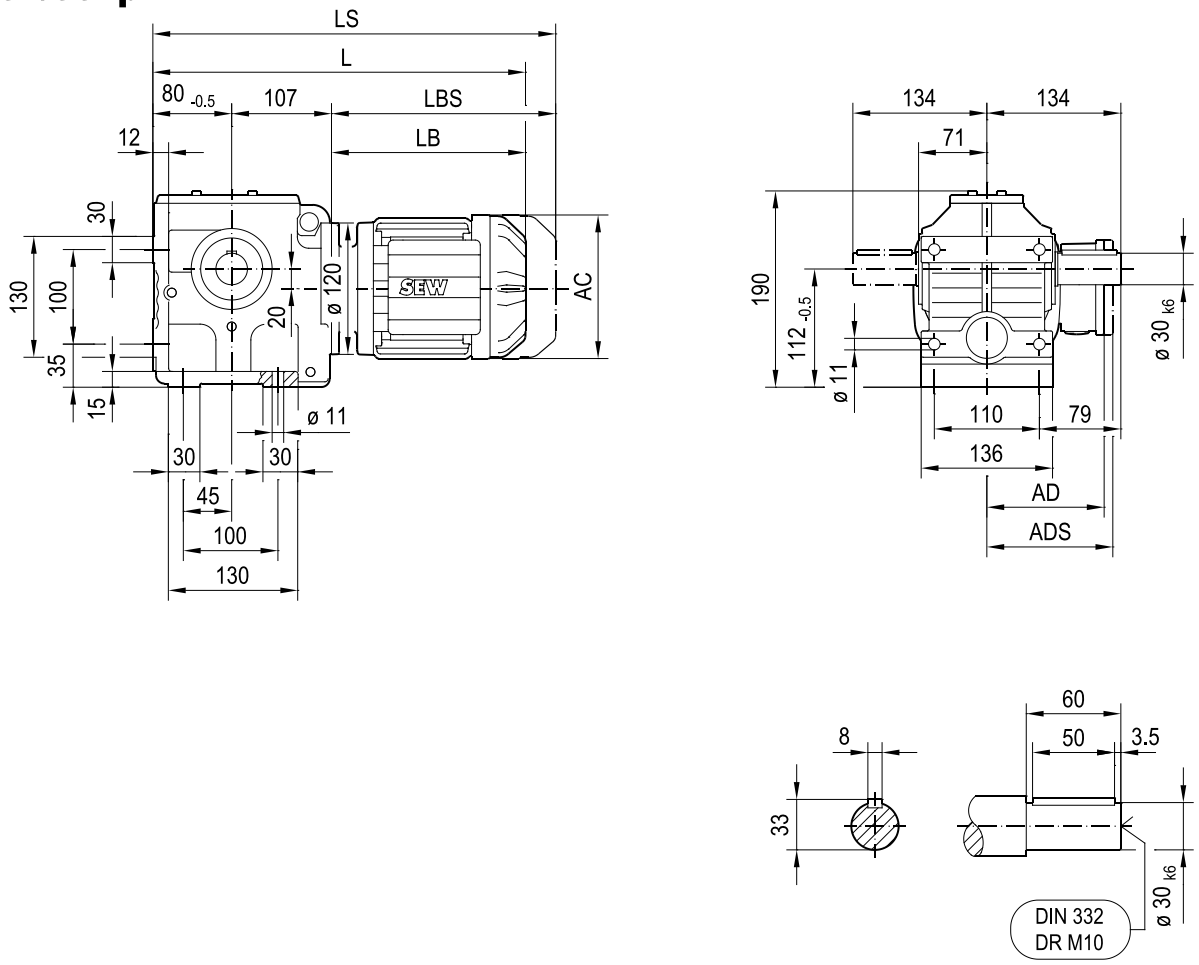

(→ 📖 4.1)	DRN										
	63MS	63M	71MS	71M	80MK	80MS	80M	90S	90L	100LS	100L/LM
AC	115	115	139	139	156	156	156	179	179	197	197
AD	98	98	118	118	128	128	128	140	140	157	157
ADS	98	98	129	129	139	139	139	150	150	158	158
L	377	391	393	413	424	441	470	471	503	501	551
LS	433	447	460	480	505	522	551	565	597	595	645
LB	190	204	206	226	237	254	283	284	316	314	364
LBS	246	260	273	293	318	335	364	378	410	408	458

02 018 02 14

SF57/SF57p..

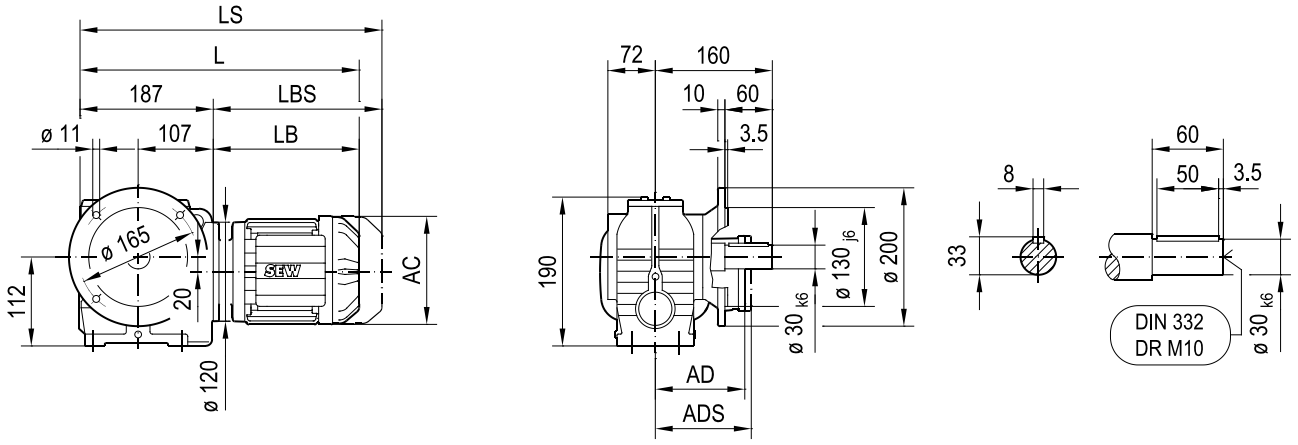

SAF57/SAF57p..

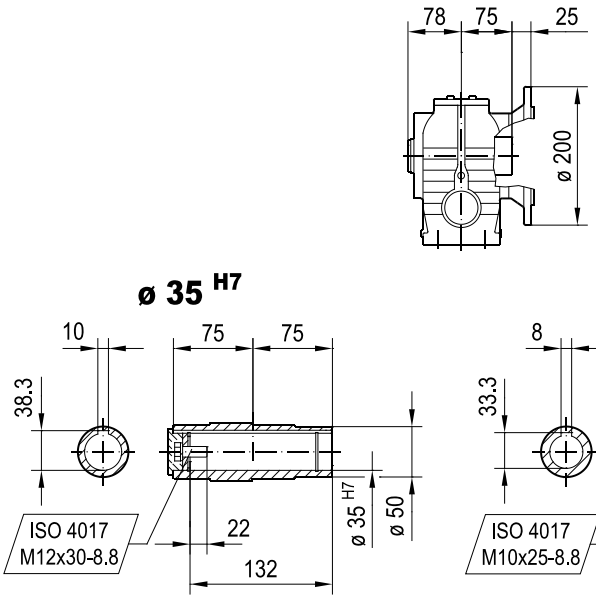

SHF57/SHF57p..

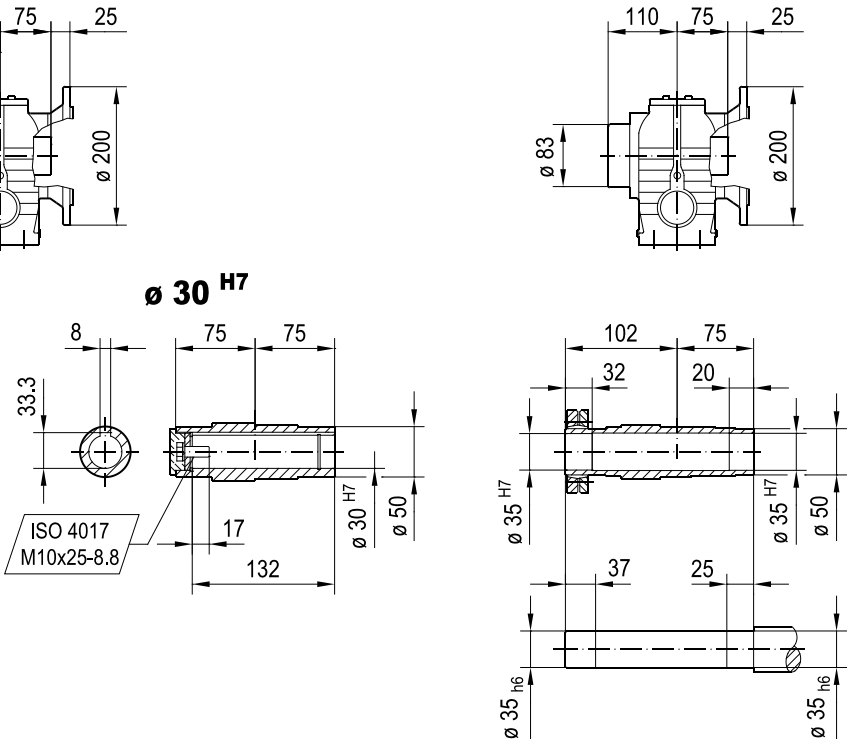

(→ 📖 4.1)	DRN										
	63MS	63M	71MS	71M	80MK	80MS	80M	90S	90L	100LS	100L/LM
AC	115	115	139	139	156	156	156	179	179	197	197
AD	98	98	118	118	128	128	128	140	140	157	157
ADS	98	98	129	129	139	139	139	150	150	158	158
L	377	391	393	413	424	441	470	471	503	501	551
LS	433	447	460	480	505	522	551	565	597	595	645
LB	190	204	206	226	237	254	283	284	316	314	364
LBS	246	260	273	293	318	335	364	378	410	408	458

02 019 02 14

SA57/SA57p..

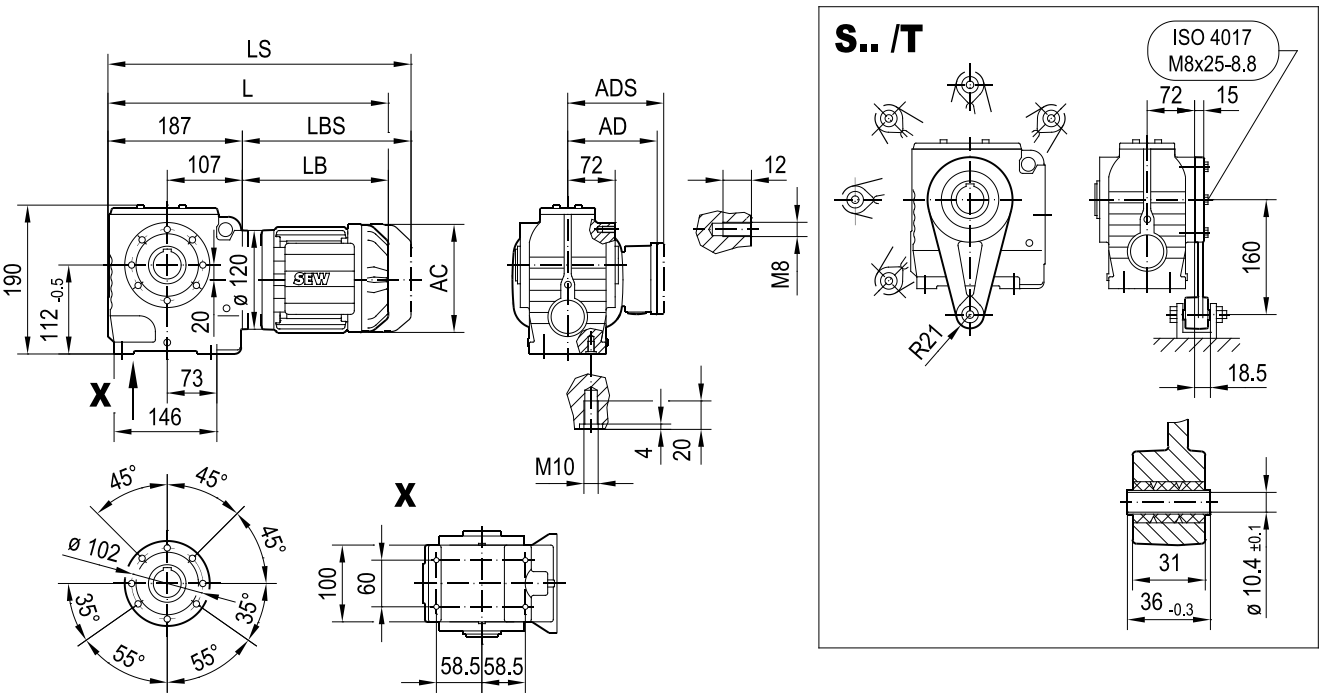

SA57/SA57p..

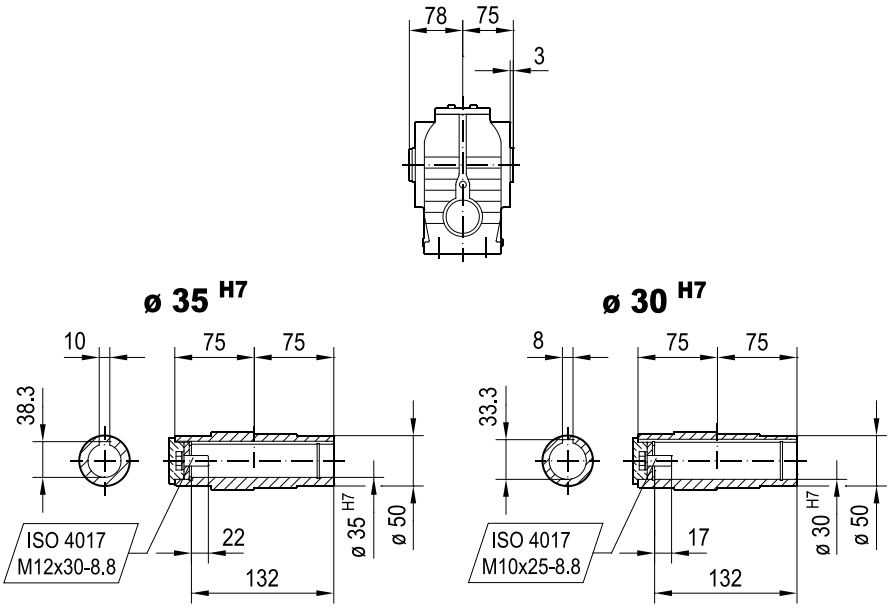

SH57/SH57p..

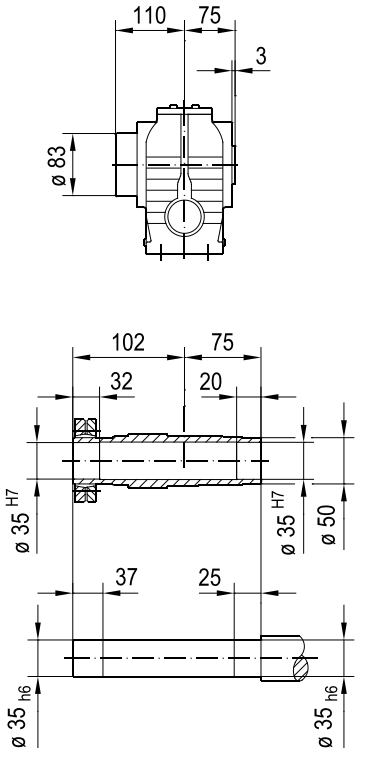

(→ 📖 4.1)	DRN										
	63MS	63M	71MS	71M	80MK	80MS	80M	90S	90L	100LS	100L/LM
AC	115	115	139	139	156	156	156	179	179	197	197
AD	98	98	118	118	128	128	128	140	140	157	157
ADS	98	98	129	129	139	139	139	150	150	158	158
L	377	391	393	413	424	441	470	471	503	501	551
LS	433	447	460	480	505	522	551	565	597	595	645
LB	190	204	206	226	237	254	283	284	316	314	364
LBS	246	260	273	293	318	335	364	378	410	408	458

SAZ57/SAZ57p..

02 020 01 14

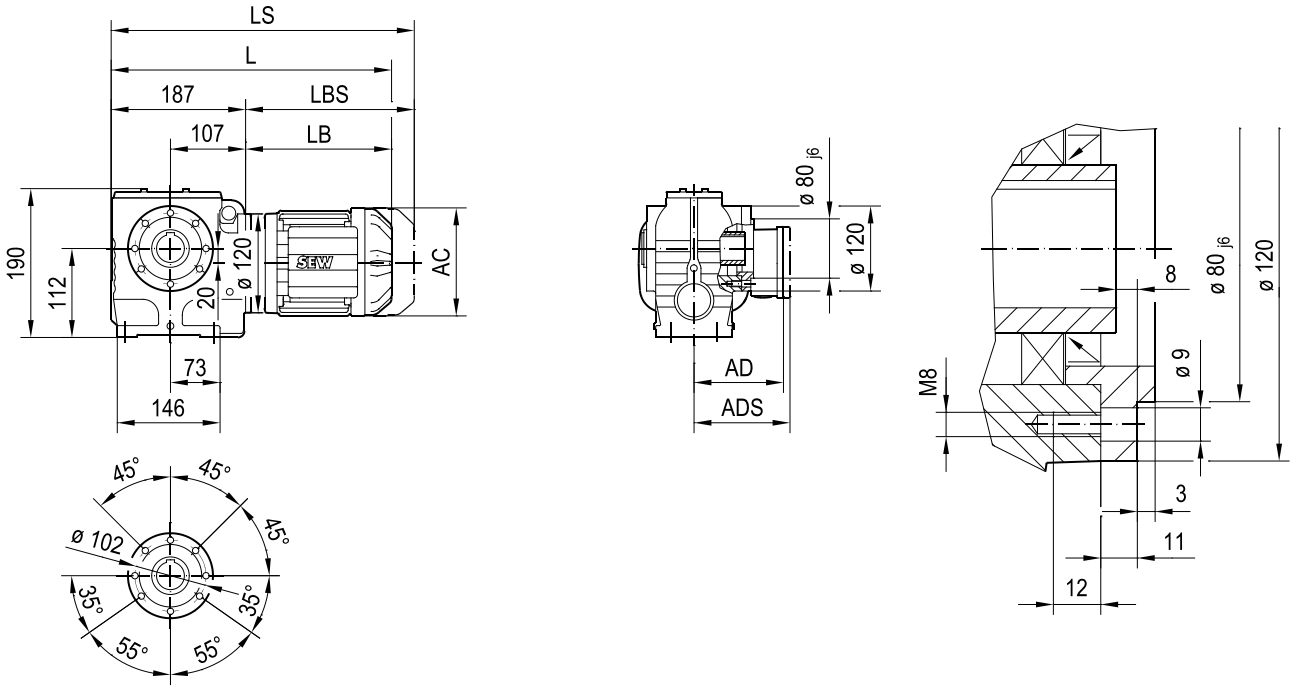

SAZ57/SAZ57p..

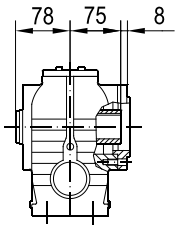

ø 35 H7

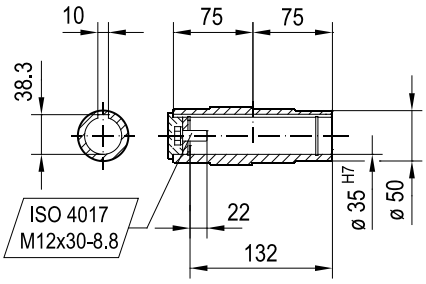

ø 30 H7

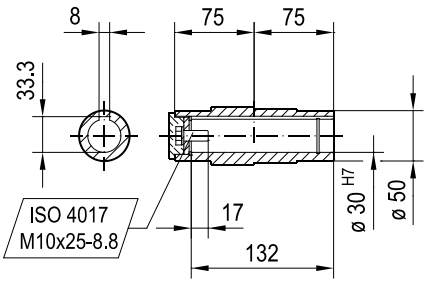

SHZ57/SHZ57p..

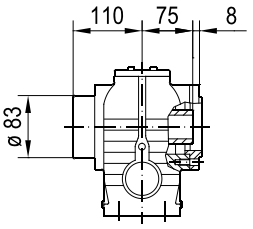

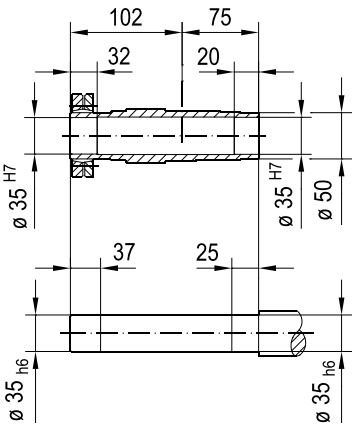

(→ 📖 4.1)	DRN										
	63MS	63M	71MS	71M	80MK	80MS	80M	90S	90L	100LS	100L/LM
AC	115	115	139	139	156	156	156	179	179	197	197
AD	98	98	118	118	128	128	128	140	140	157	157
ADS	98	98	129	129	139	139	139	150	150	158	158
L	377	391	393	413	424	441	470	471	503	501	551
LS	433	447	460	480	505	522	551	565	597	595	645
LB	190	204	206	226	237	254	283	284	316	314	364
LBS	246	260	273	293	318	335	364	378	410	408	458

ST57/ST57p..

02 021 03 14

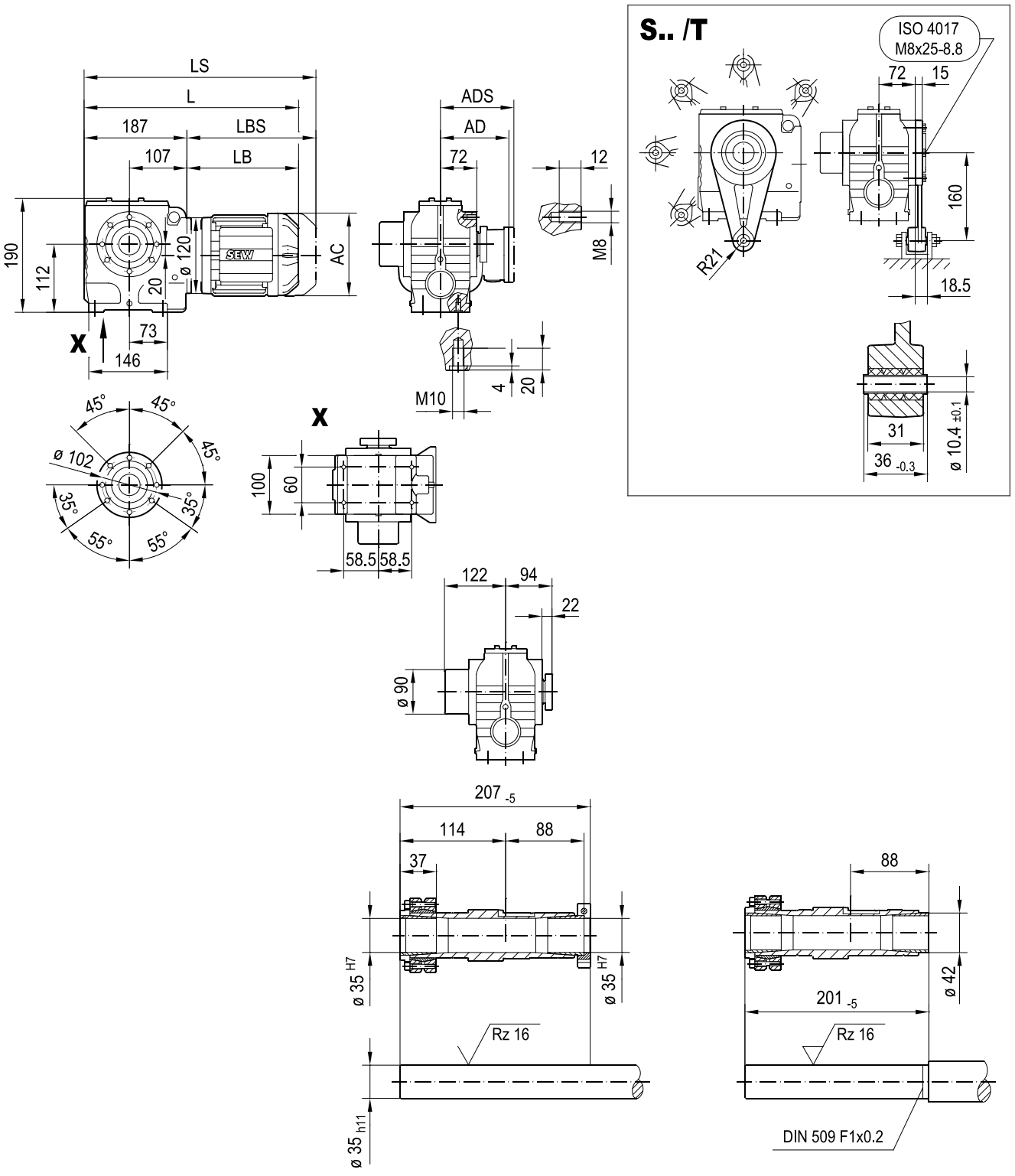

(→ 📖 4.1)	DRN										
	63MS	63M	71MS	71M	80MK	80MS	80M	90S	90L	100LS	100L/LM
AC	115	115	139	139	156	156	156	179	179	197	197
AD	98	98	118	118	128	128	128	140	140	157	157
ADS	98	98	129	129	139	139	139	150	150	158	158
L	377	391	393	413	424	441	470	471	503	501	551
LS	433	447	460	480	505	522	551	565	597	595	645
LB	190	204	206	226	237	254	283	284	316	314	364
LBS	246	260	273	293	318	335	364	378	410	408	458

02 022 01 14

S67/S67p..

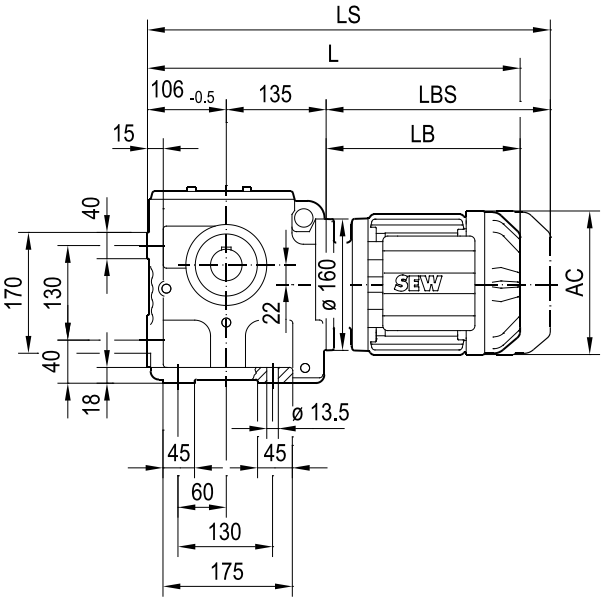

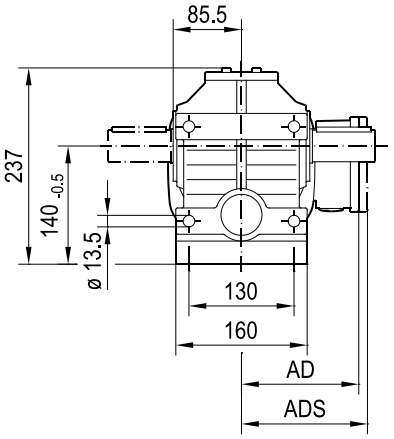

S67..

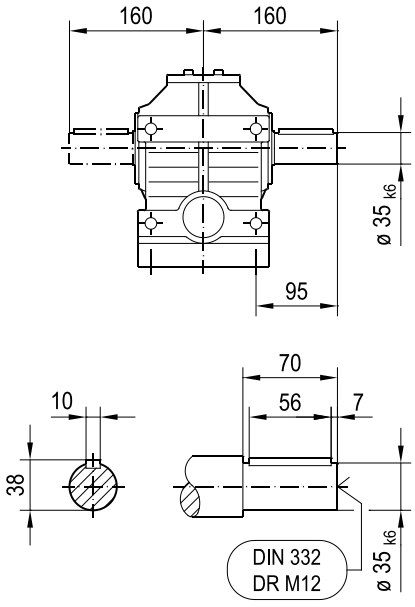

S67/S67p..

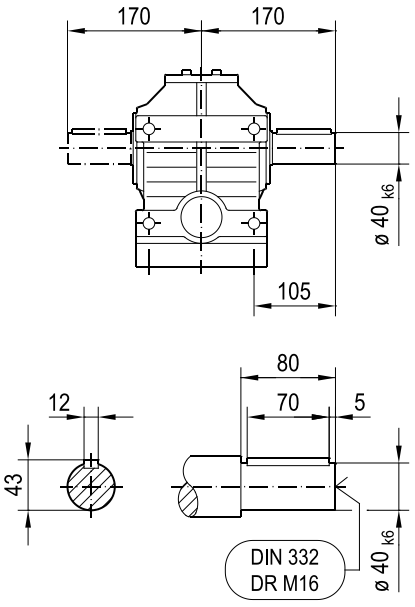

(→ 📖 4.1)	DRN												
	63M	71MS	71M	80MK	80MS	80M	90S	90L	100LS	100L/LM	112M	132S	132M
AC	115	139	139	156	156	156	179	179	197	197	221	221	261
AD	98	118	118	128	128	128	140	140	157	157	170	170	228
ADS	98	129	129	139	139	139	150	150	158	158	172	172	228
L	439	440	460	471	488	517	519	551	546	596	627	681	699
LS	495	508	528	552	569	598	612	644	640	690	739	793	837
LB	198	199	219	230	247	276	278	310	305	355	386	440	458
LBS	254	267	287	311	328	357	371	403	399	449	498	552	596

SF67/SF67p..

02 023 01 14

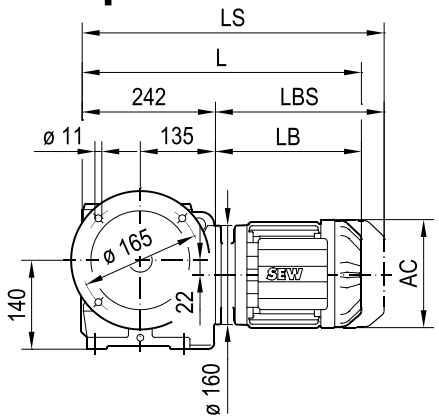

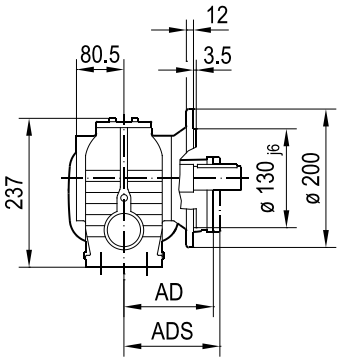

SF67..

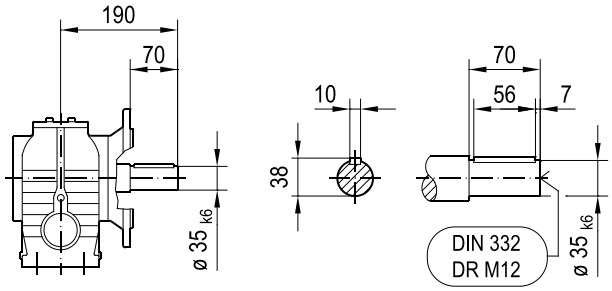

SF67/SF67p..

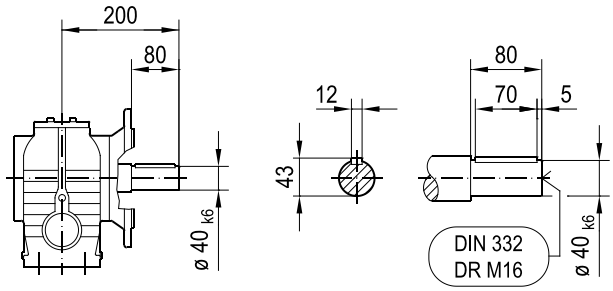

SAF67/SAF67p..

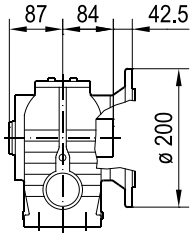

SHF67/SHF67p..

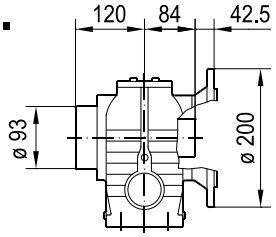

ø 45 H7

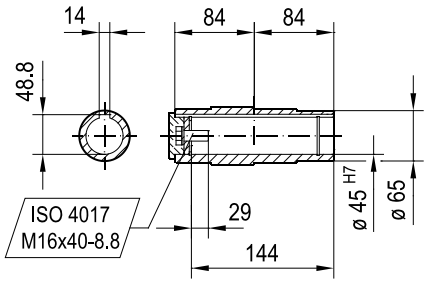

ø 40 H7

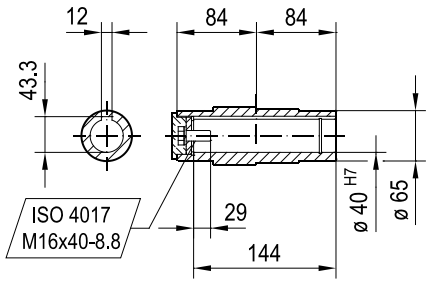

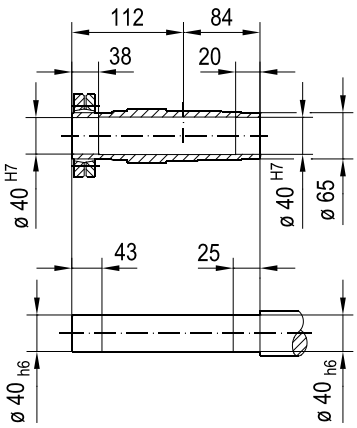

(→ 📖 4.1)	DRN												
	63M	71MS	71M	80MK	80MS	80M	90S	90L	100LS	100L/LM	112M	132S	132M
AC	115	139	139	156	156	156	179	179	197	197	221	221	261
AD	98	118	118	128	128	128	140	140	157	157	170	170	228
ADS	98	129	129	139	139	139	150	150	158	158	172	172	228
L	440	441	461	472	489	518	520	552	547	597	628	682	700
LS	496	509	529	553	570	599	613	645	641	691	740	794	838
LB	198	199	219	230	247	276	278	310	305	355	386	440	458
LBS	254	267	287	311	328	357	371	403	399	449	498	552	596

02 024 02 14

SA67/SA67p..

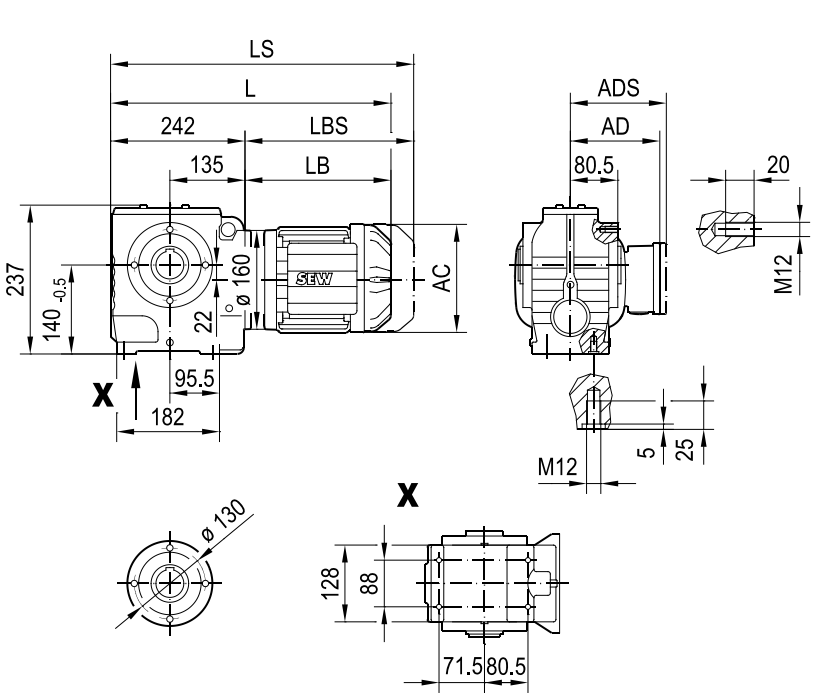

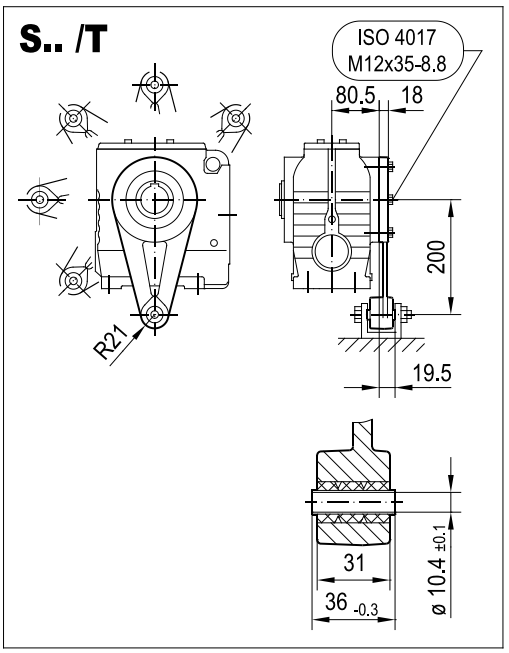

SA67/SA67p..

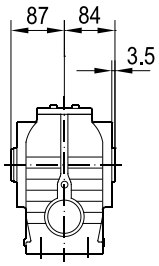

ø 45 H7

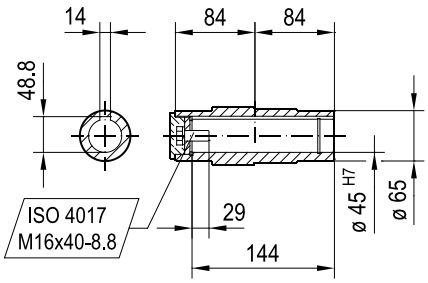

ø 40 H7

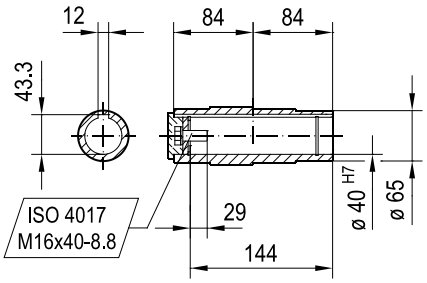

SH67/SH67p..

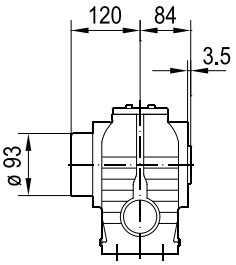

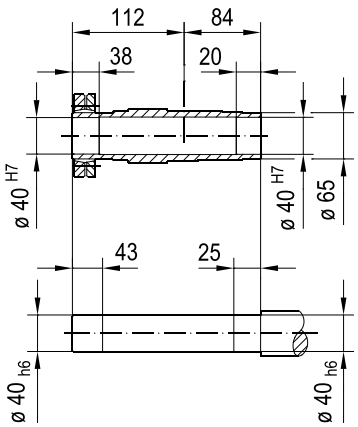

(→ 📖 4.1)	DRN												
	63M	71MS	71M	80MK	80MS	80M	90S	90L	100LS	100L/LM	112M	132S	132M
AC	115	139	139	156	156	156	179	179	197	197	221	221	261
AD	98	118	118	128	128	128	140	140	157	157	170	170	228
ADS	98	129	129	139	139	139	150	150	158	158	172	172	228
L	440	441	461	472	489	518	520	552	547	597	628	682	700
LS	496	509	529	553	570	599	613	645	641	691	740	794	838
LB	198	199	219	230	247	276	278	310	305	355	386	440	458
LBS	254	267	287	311	328	357	371	403	399	449	498	552	596

SAZ67/SAZ67p..

02 025 01 14

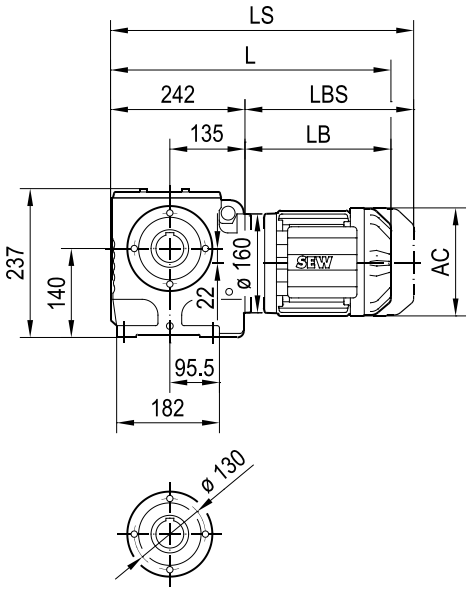

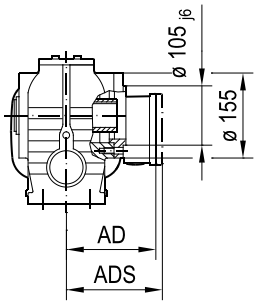

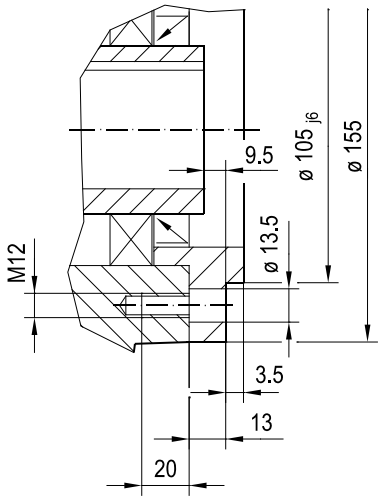

SAZ67/SAZ67p..

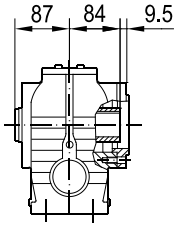

ø 45 H7

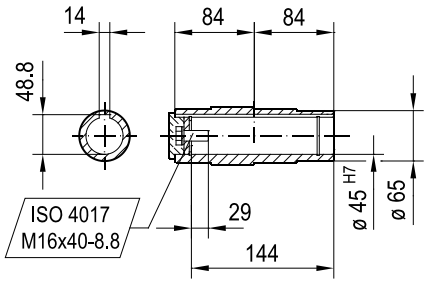

ø 40 H7

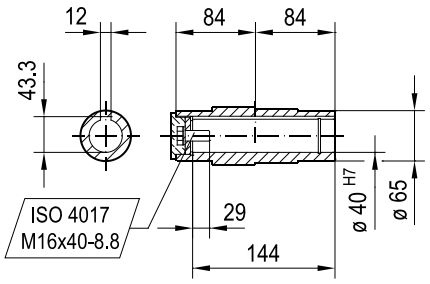

SHZ67/SHZ67p..

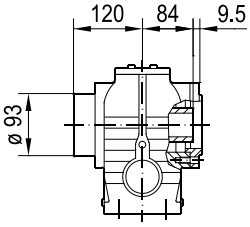

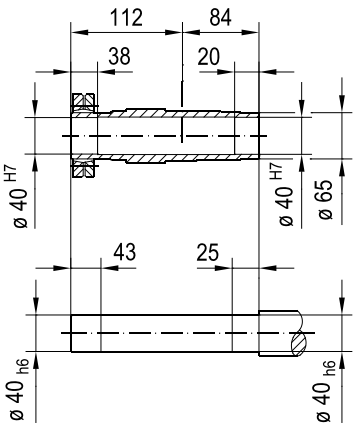

(→ 📖 4.1)	DRN												
	63M	71MS	71M	80MK	80MS	80M	90S	90L	100LS	100L/LM	112M	132S	132M
AC	115	139	139	156	156	156	179	179	197	197	221	221	261
AD	98	118	118	128	128	128	140	140	157	157	170	170	228
ADS	98	129	129	139	139	139	150	150	158	158	172	172	228
L	440	441	461	472	489	518	520	552	547	597	628	682	700
LS	496	509	529	553	570	599	613	645	641	691	740	794	838
LB	198	199	219	230	247	276	278	310	305	355	386	440	458
LBS	254	267	287	311	328	357	371	403	399	449	498	552	596

02 026 03 14

ST67/ST67p..

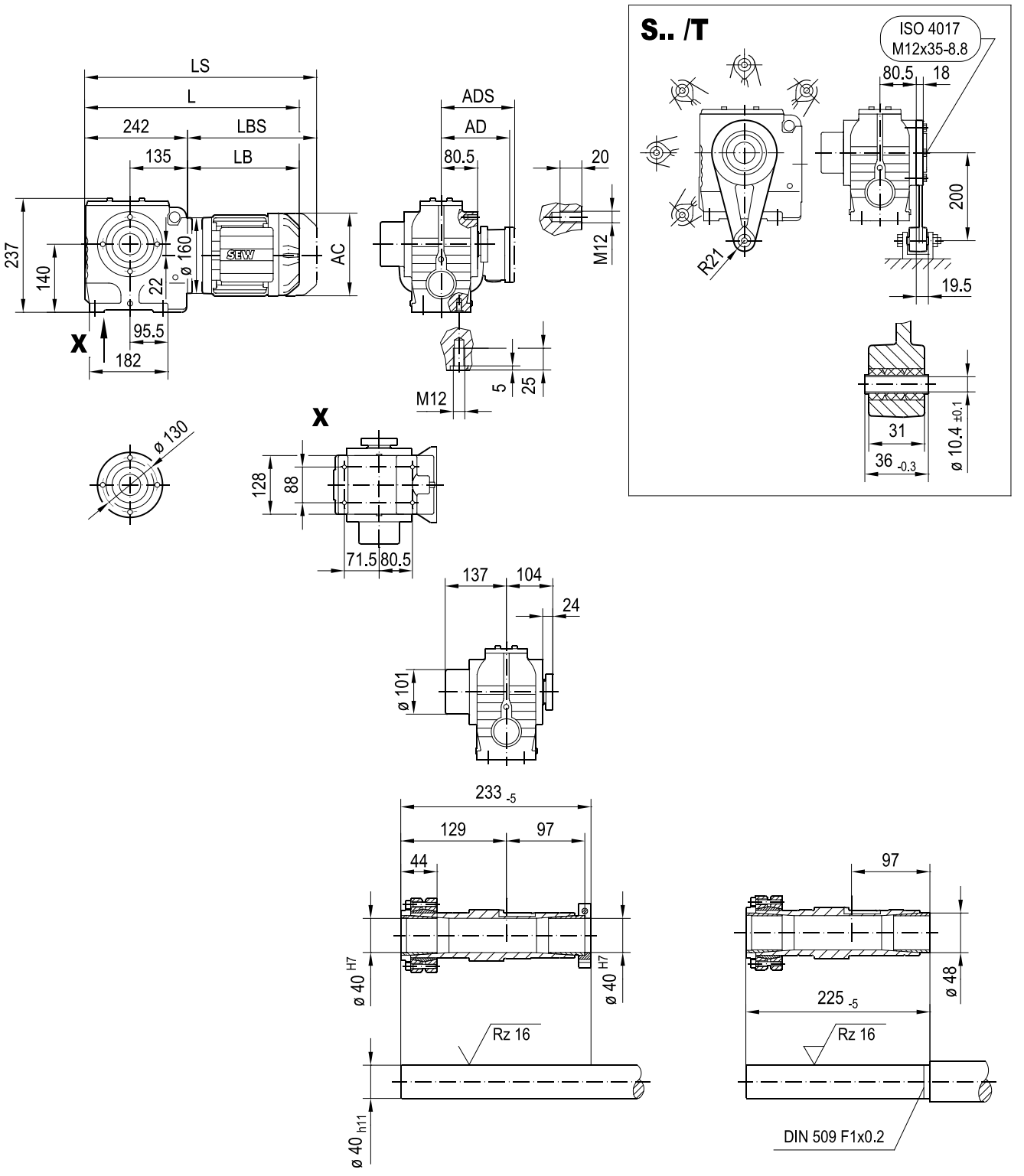

(→ 📖 4.1)	DRN												
	63M	71MS	71M	80MK	80MS	80M	90S	90L	100LS	100L/LM	112M	132S	132M
AC	115	139	139	156	156	156	179	179	197	197	221	221	261
AD	98	118	118	128	128	128	140	140	157	157	170	170	228
ADS	98	129	129	139	139	139	150	150	158	158	172	172	228
L	440	441	461	472	489	518	520	552	547	597	628	682	700
LS	496	509	529	553	570	599	613	645	641	691	740	794	838
LB	198	199	219	230	247	276	278	310	305	355	386	440	458
LBS	254	267	287	311	328	357	371	403	399	449	498	552	596

02 027 01 14

S77/S77p..

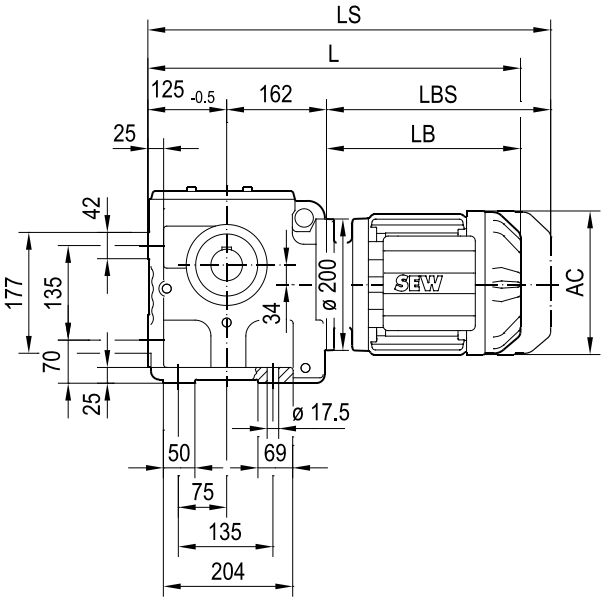

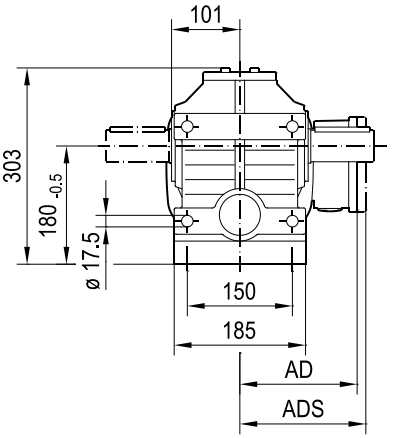

S77..

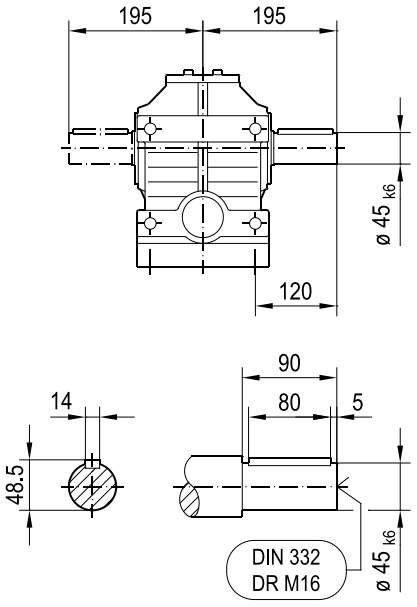

S77/S77p..

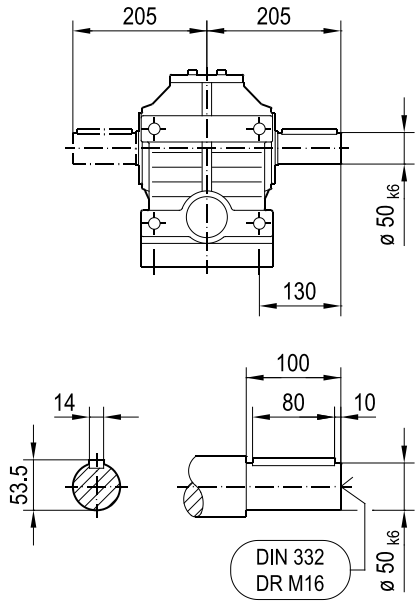

(→ 📖 4.1)	DRN												
	71M	80MK	80MS	80M	90S	90L	100LS	100L/LM	112M	132S	132M	132L	160..
AC	139	156	156	156	179	179	197	197	221	221	261	261	314
AD	118	128	128	128	140	140	157	157	170	170	228	228	253
ADS	129	139	139	139	150	150	158	158	172	172	228	228	253
L	499	510	527	556	558	590	585	635	666	716	734	760	826
LS	567	591	608	637	651	683	679	729	778	828	872	897	1015
LB	212	223	240	269	271	303	298	348	379	429	447	473	539
LBS	280	304	321	350	364	396	392	442	491	541	585	610	728

SF77/SF77p..

02 028 01 14

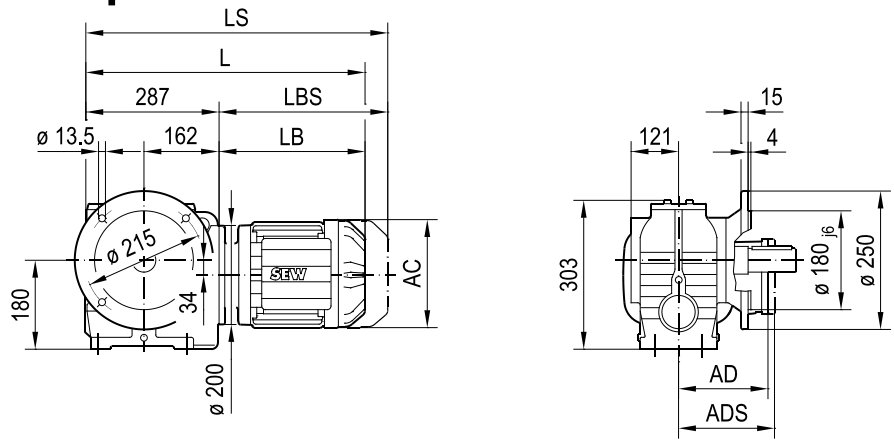

SF77..

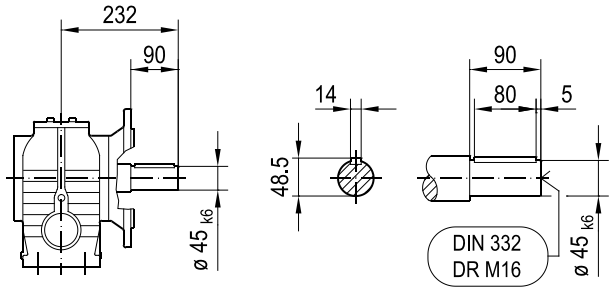

SF77/SF77p..

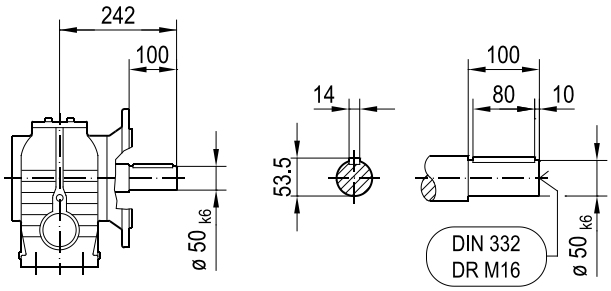

SAF77/SAF77p..

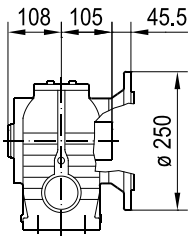

SHF77/SHF77p..

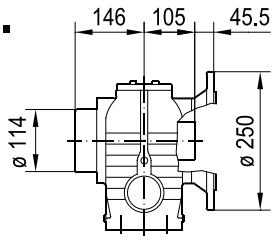

ø 60 H7

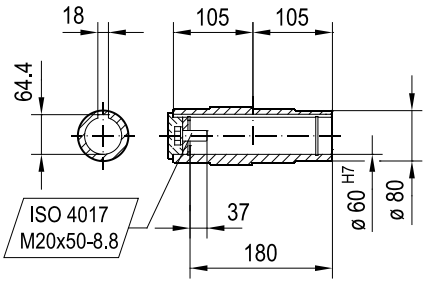

ø 50 H7

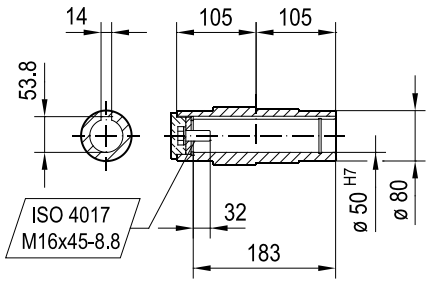

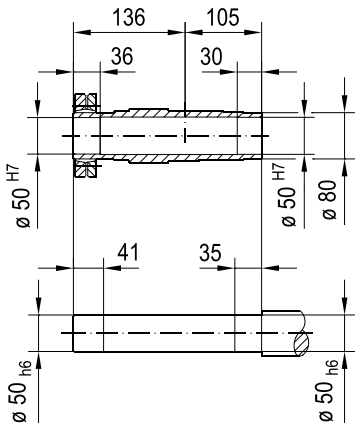

(→ 📖 4.1)	DRN												
	71M	80MK	80MS	80M	90S	90L	100LS	100L/LM	112M	132S	132M	132L	160..
AC	139	156	156	156	179	179	197	197	221	221	261	261	314
AD	118	128	128	128	140	140	157	157	170	170	228	228	253
ADS	129	139	139	139	150	150	158	158	172	172	228	228	253
L	499	510	527	556	558	590	585	635	666	716	734	760	826
LS	567	591	608	637	651	683	679	729	778	828	872	897	1015
LB	212	223	240	269	271	303	298	348	379	429	447	473	539
LBS	280	304	321	350	364	396	392	442	491	541	585	610	728

02 029 02 14

SA77/SA77p..

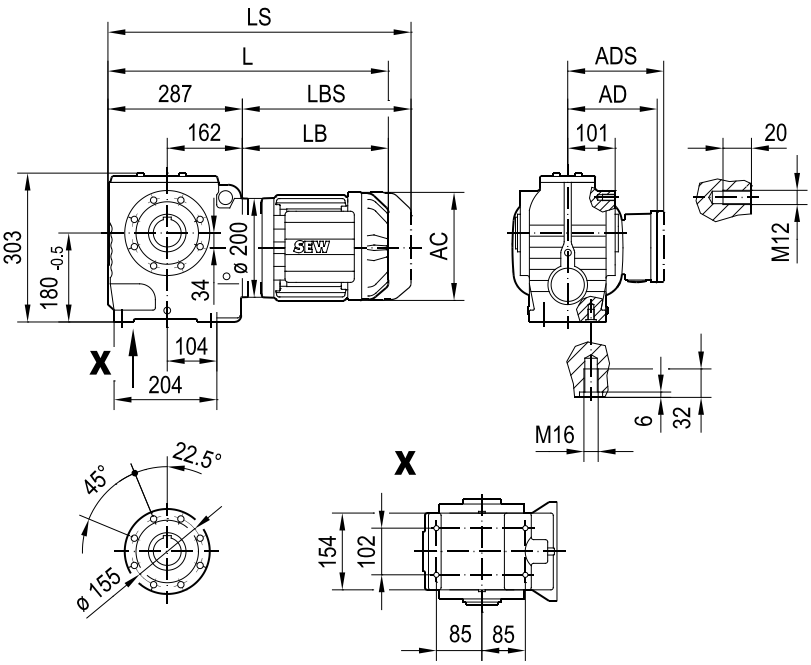

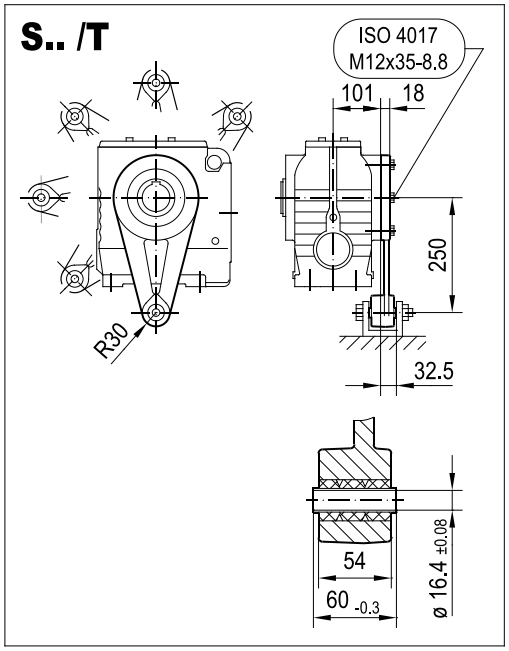

SA77/SA77p..

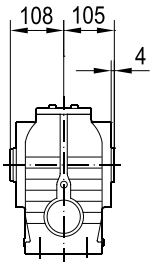

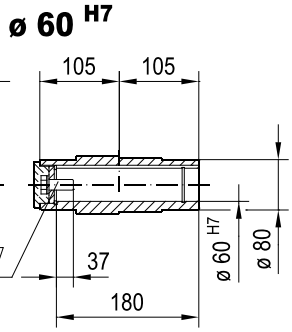

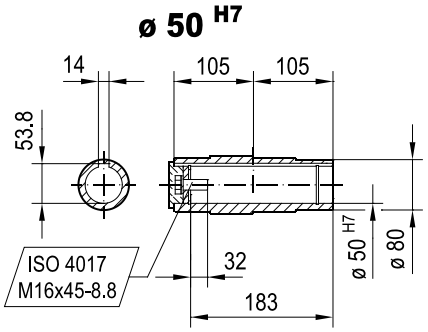

SH77/SH77p..

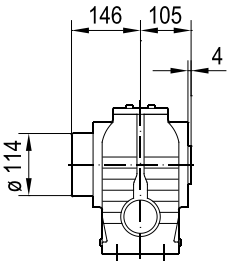

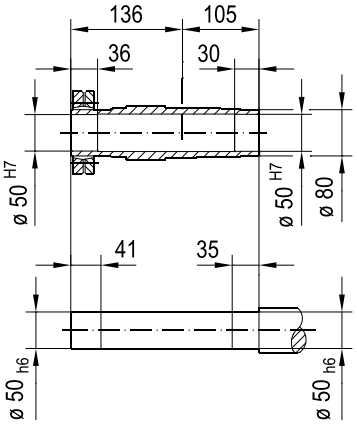

(→ 📖 4.1)	DRN												
	71M	80MK	80MS	80M	90S	90L	100LS	100L/LM	112M	132S	132M	132L	160..
AC	139	156	156	156	179	179	197	197	221	221	261	261	314
AD	118	128	128	128	140	140	157	157	170	170	228	228	253
ADS	129	139	139	139	150	150	158	158	172	172	228	228	253
L	499	510	527	556	558	590	585	635	666	716	734	760	826
LS	567	591	608	637	651	683	679	729	778	828	872	897	1015
LB	212	223	240	269	271	303	298	348	379	429	447	473	539
LBS	280	304	321	350	364	396	392	442	491	541	585	610	728

SAZ77/SAZ77p..

02 030 01 14

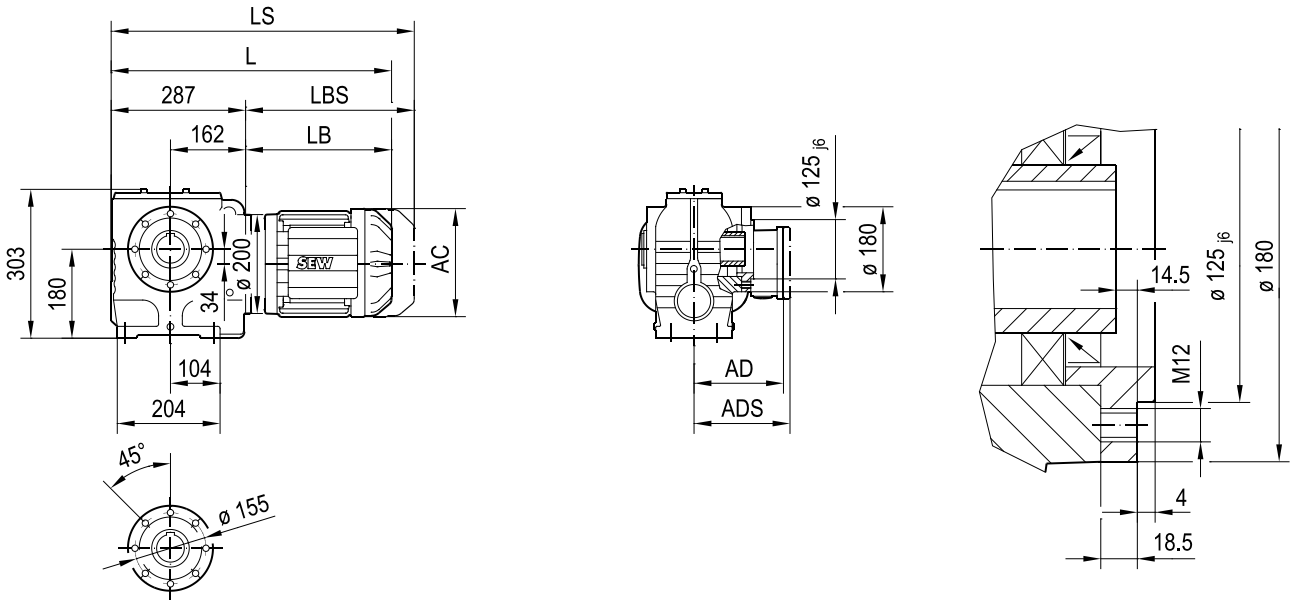

SAZ77/SAZ77p..

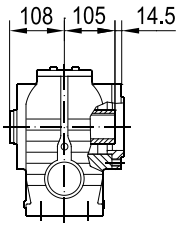

ø 60 H7

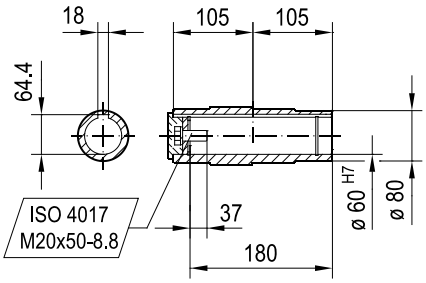

ø 50 H7

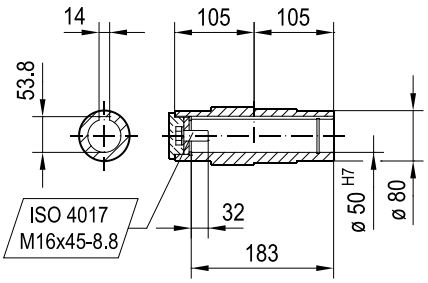

SHZ77/SHZ77p..

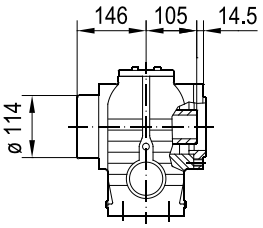

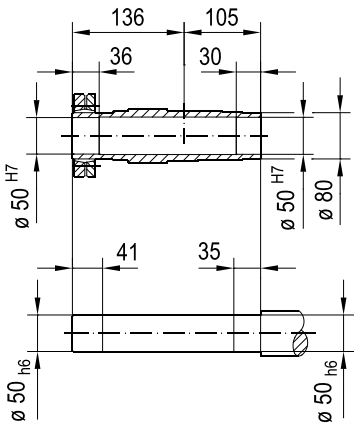

(→ 📖 4.1)	DRN												
	71M	80MK	80MS	80M	90S	90L	100LS	100L/LM	112M	132S	132M	132L	160..
AC	139	156	156	156	179	179	197	197	221	221	261	261	314
AD	118	128	128	128	140	140	157	157	170	170	228	228	253
ADS	129	139	139	139	150	150	158	158	172	172	228	228	253
L	499	510	527	556	558	590	585	635	666	716	734	760	826
LS	567	591	608	637	651	683	679	729	778	828	872	897	1015
LB	212	223	240	269	271	303	298	348	379	429	447	473	539
LBS	280	304	321	350	364	396	392	442	491	541	585	610	728

02 031 03 14

ST77/ST77p..

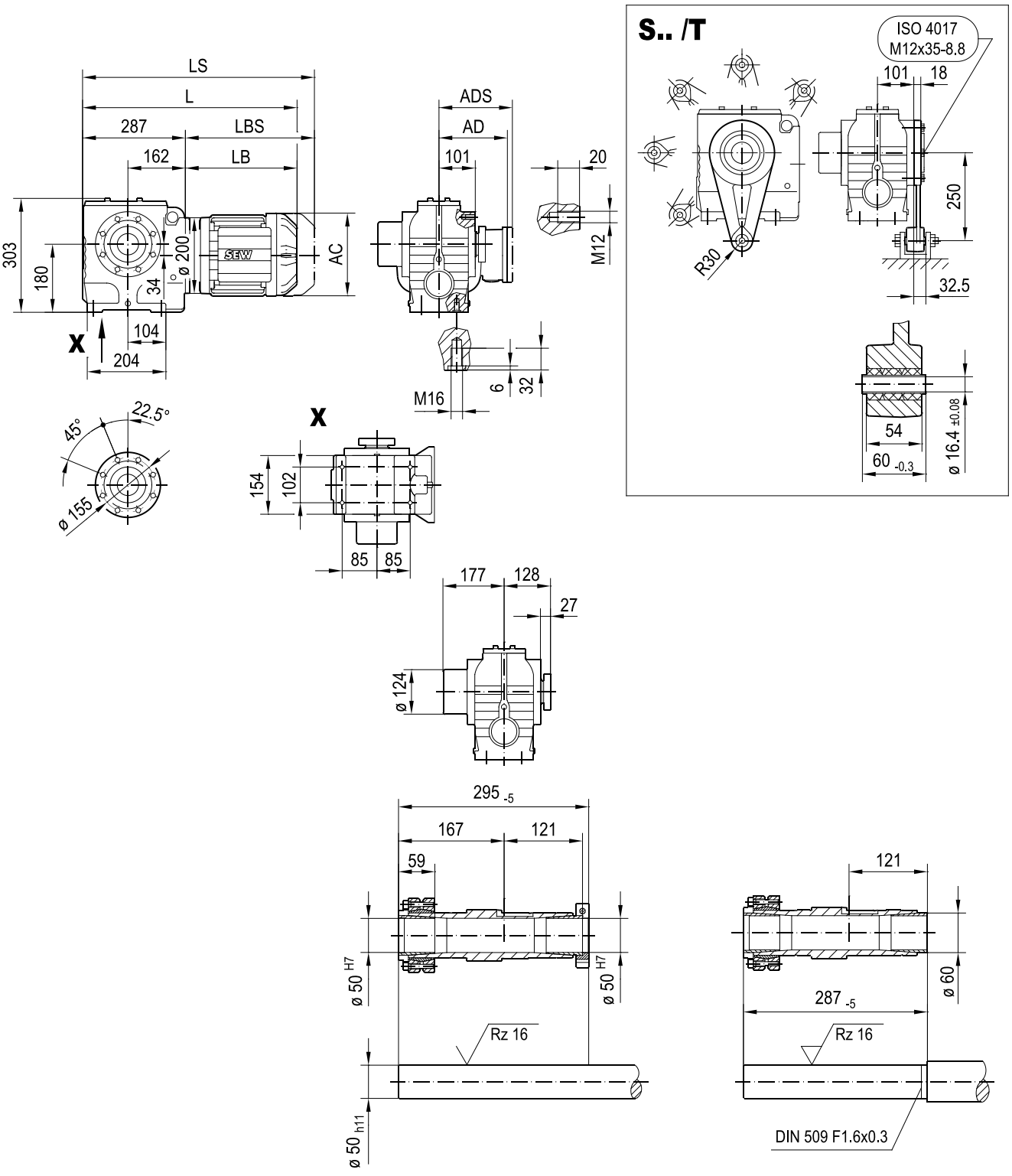

(→ 📖 4.1)	DRN												
	71M	80MK	80MS	80M	90S	90L	100LS	100L/LM	112M	132S	132M	132L	160..
AC	139	156	156	156	179	179	197	197	221	221	261	261	314
AD	118	128	128	128	140	140	157	157	170	170	228	228	253
ADS	129	139	139	139	150	150	158	158	172	172	228	228	253
L	499	510	527	556	558	590	585	635	666	716	734	760	826
LS	567	591	608	637	651	683	679	729	778	828	872	897	1015
LB	212	223	240	269	271	303	298	348	379	429	447	473	539
LBS	280	304	321	350	364	396	392	442	491	541	585	610	728

02 032 01 14

S87/S87p..

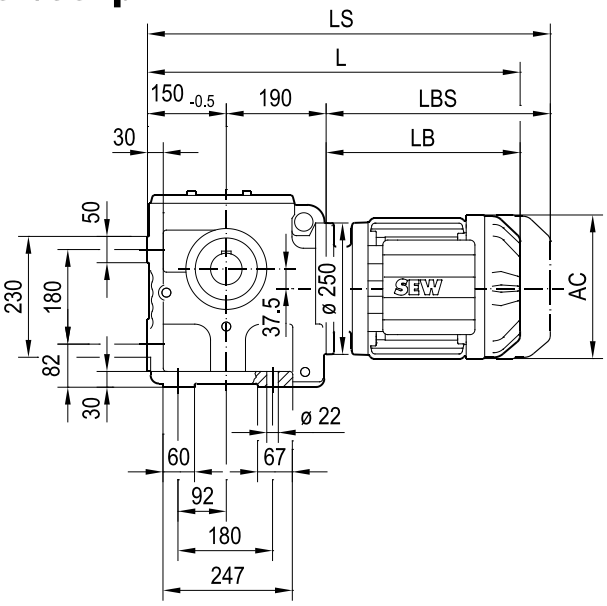

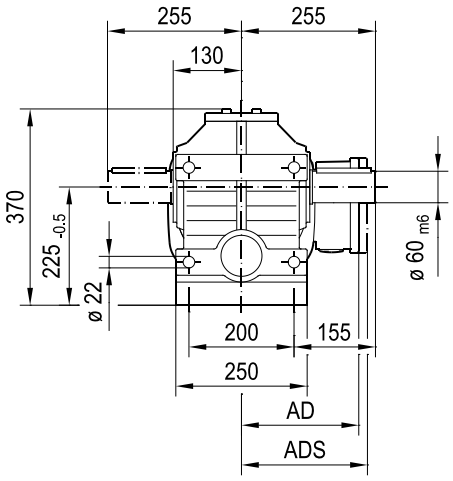

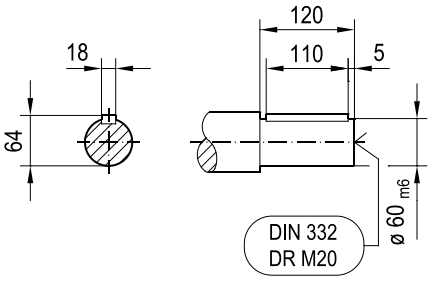

(→ 📖 4.1)	DRN												
	80MK	80MS	80M	90S	90L	100LS	100L/LM	112M	132S	132M	132L	160..	180..
AC	156	156	156	179	179	197	197	221	221	261	261	314	357
AD	128	128	128	140	140	157	157	170	170	228	228	253	268
ADS	139	139	139	150	150	158	158	172	172	228	228	253	268
L	558	575	604	606	638	633	683	714	764	782	808	874	897
LS	639	656	685	699	731	727	777	826	876	920	945	1063	1086
LB	218	235	264	266	298	293	343	374	424	442	468	534	557
LBS	299	316	345	359	391	387	437	486	536	580	605	723	746

02 033 01 14

SF87/SF87p..

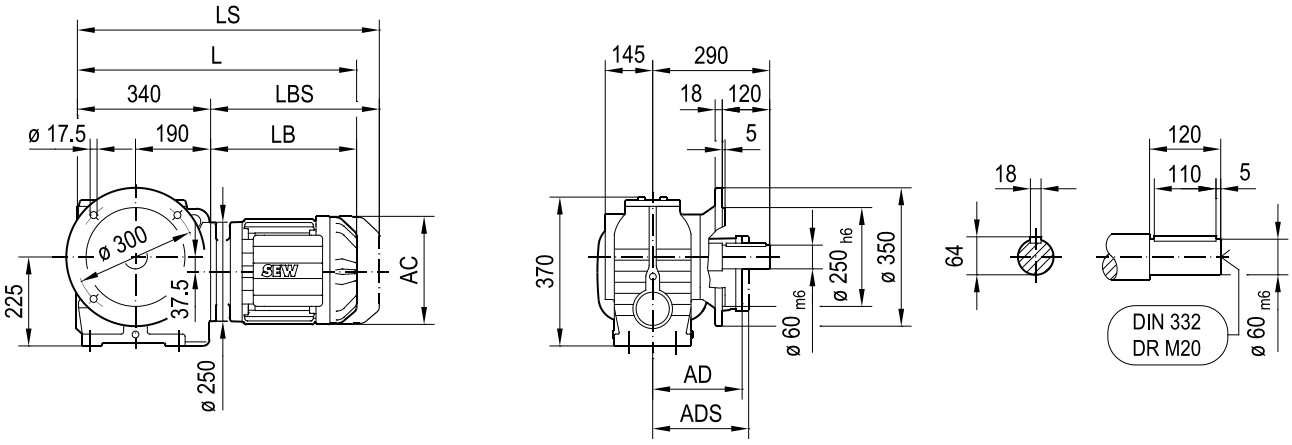

SAF87/SAF87p..

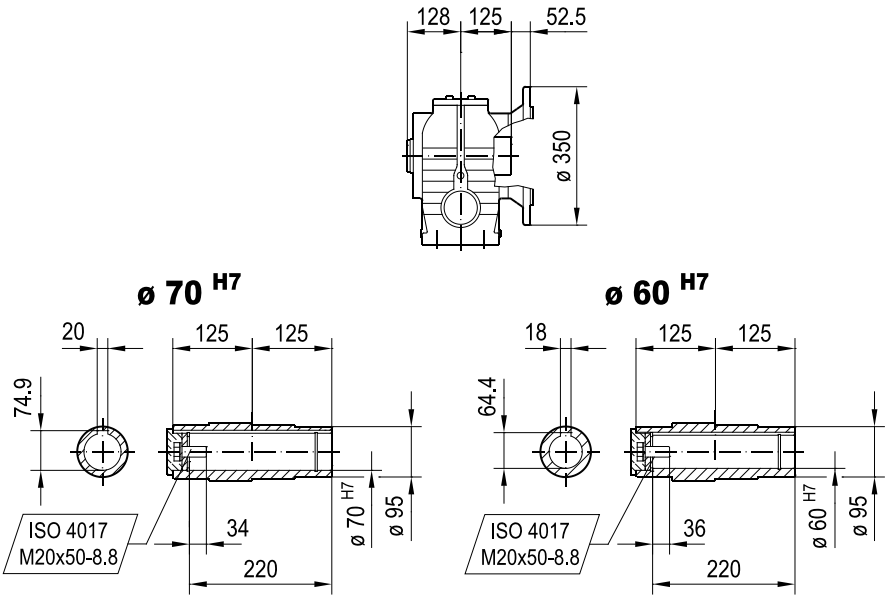

SHF87/SHF88p..

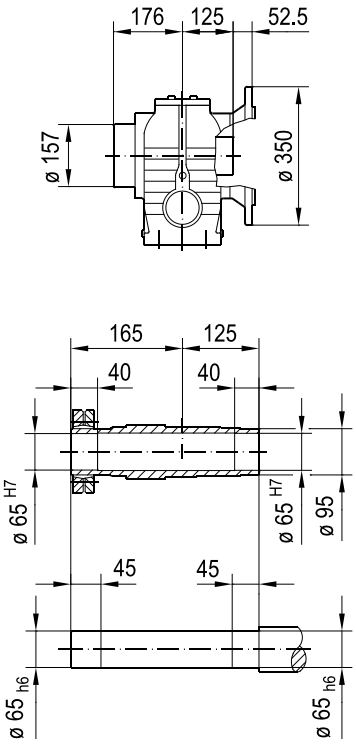

(→ 📖 4.1)	DRN												
	80MK	80MS	80M	90S	90L	100LS	100L/LM	112M	132S	132M	132L	160..	180..
AC	156	156	156	179	179	197	197	221	221	261	261	314	357
AD	128	128	128	140	140	157	157	170	170	228	228	253	268
ADS	139	139	139	150	150	158	158	172	172	228	228	253	268
L	558	575	604	606	638	633	683	714	764	782	808	874	897
LS	639	656	685	699	731	727	777	826	876	920	945	1063	1086
LB	218	235	264	266	298	293	343	374	424	442	468	534	557
LBS	299	316	345	359	391	387	437	486	536	580	605	723	746

02 034 02 14

SA87/SA87p..

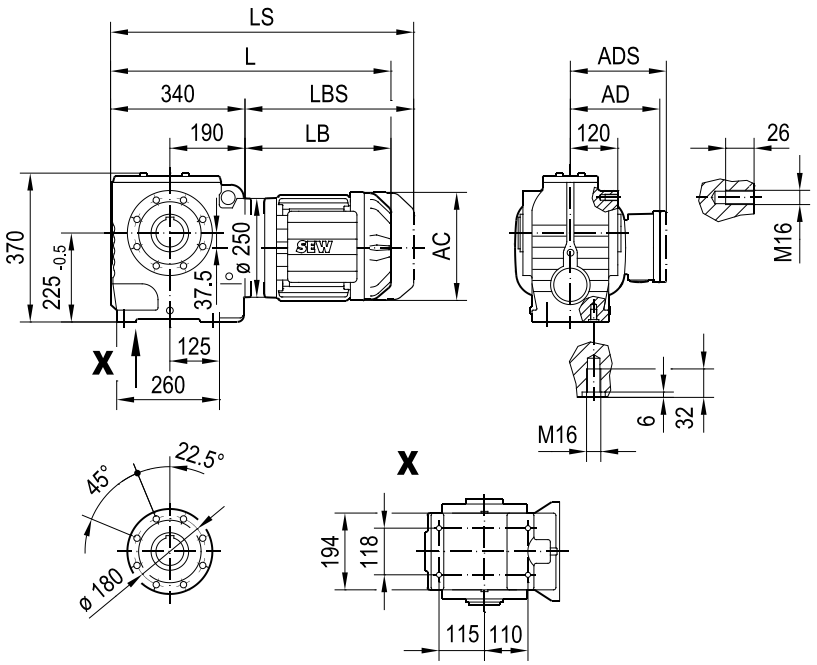

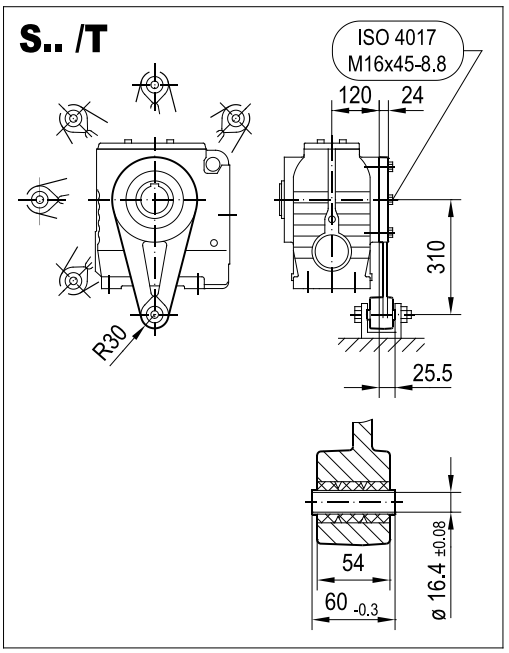

SA87/SA87p..

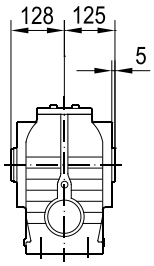

ø 70 H7

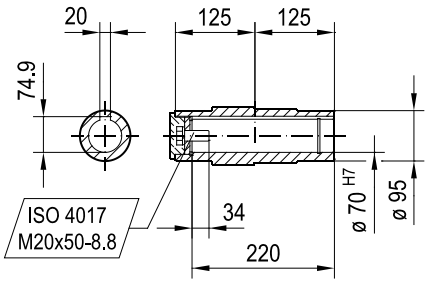

ø 60 H7

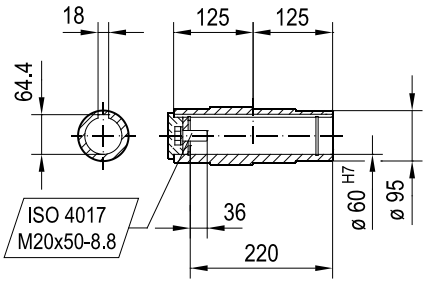

SH87/SH87p..

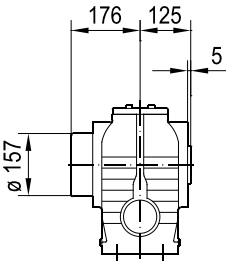

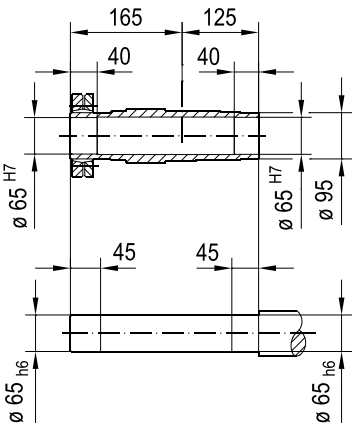

(→ 📖 4.1)	DRN												
	80MK	80MS	80M	90S	90L	100LS	100L/LM	112M	132S	132M	132L	160..	180..
AC	156	156	156	179	179	197	197	221	221	261	261	314	357
AD	128	128	128	140	140	157	157	170	170	228	228	253	268
ADS	139	139	139	150	150	158	158	172	172	228	228	253	268
L	558	575	604	606	638	633	683	714	764	782	808	874	897
LS	639	656	685	699	731	727	777	826	876	920	945	1063	1086
LB	218	235	264	266	298	293	343	374	424	442	468	534	557
LBS	299	316	345	359	391	387	437	486	536	580	605	723	746

SAZ87/SAZ87p..

02 035 01 14

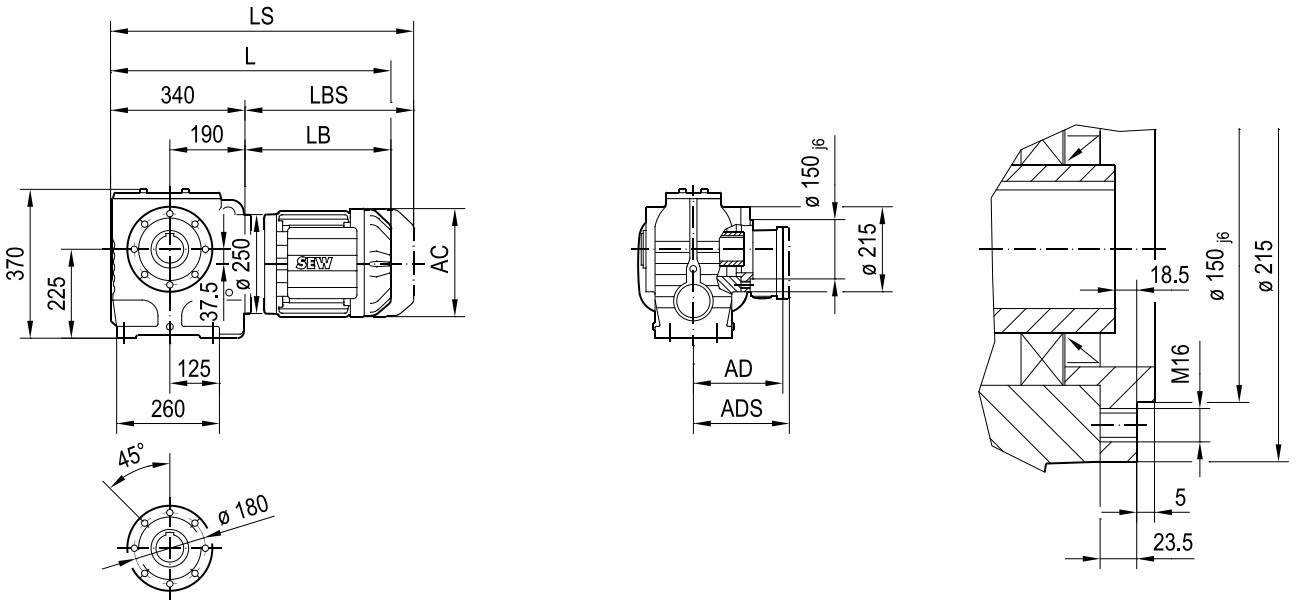

SAZ87/SAZ87p..

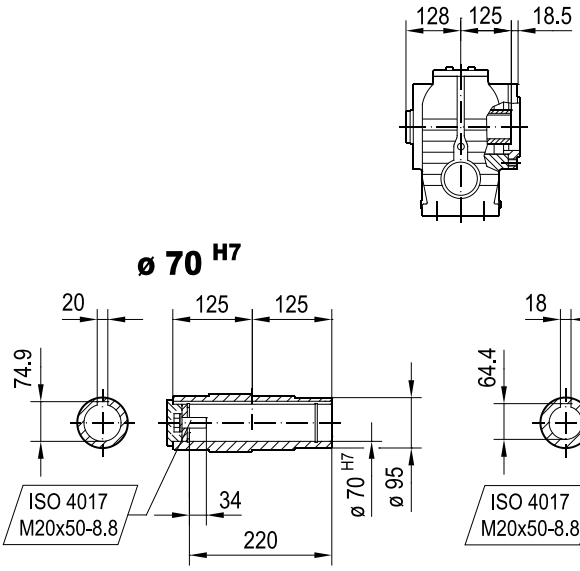

SHZ87/SHZ87p..

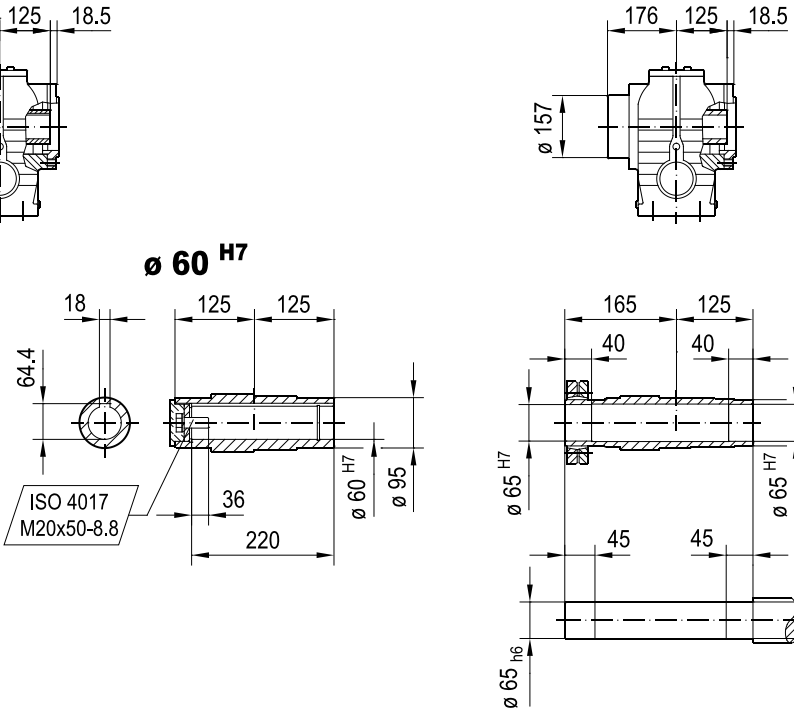

(→ 📖 4.1)	DRN												
	80MK	80MS	80M	90S	90L	100LS	100L/LM	112M	132S	132M	132L	160..	180..
AC	156	156	156	179	179	197	197	221	221	261	261	314	357
AD	128	128	128	140	140	157	157	170	170	228	228	253	268
ADS	139	139	139	150	150	158	158	172	172	228	228	253	268
L	558	575	604	606	638	633	683	714	764	782	808	874	897
LS	639	656	685	699	731	727	777	826	876	920	945	1063	1086
LB	218	235	264	266	298	293	343	374	424	442	468	534	557
LBS	299	316	345	359	391	387	437	486	536	580	605	723	746

02 036 03 14

ST87/ST87p..

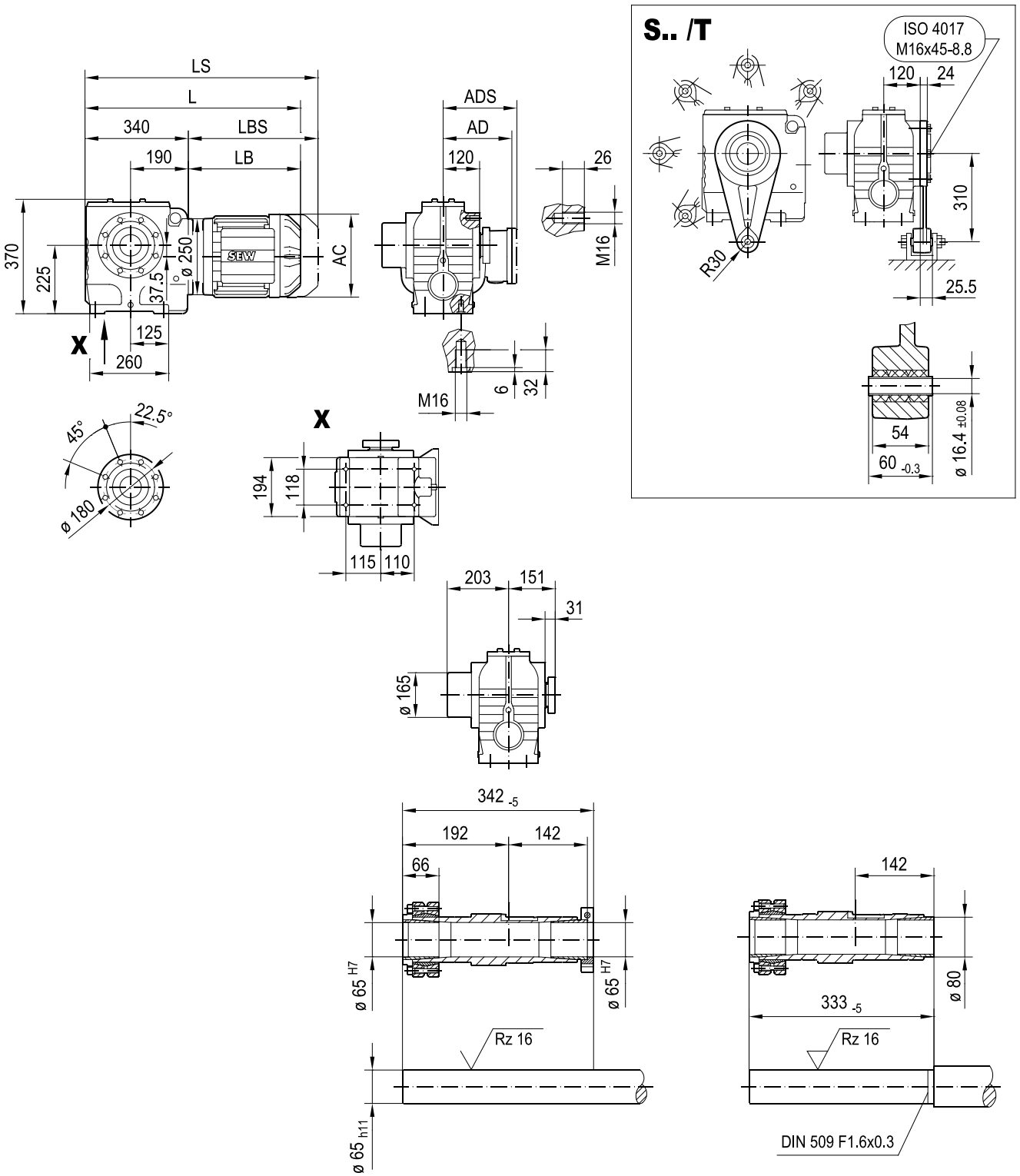

(→ 📖 4.1)	DRN												
	80MK	80MS	80M	90S	90L	100LS	100L/LM	112M	132S	132M	132L	160..	180..
AC	156	156	156	179	179	197	197	221	221	261	261	314	357
AD	128	128	128	140	140	157	157	170	170	228	228	253	268
ADS	139	139	139	150	150	158	158	172	172	228	228	253	268
L	558	575	604	606	638	633	683	714	764	782	808	874	897
LS	639	656	685	699	731	727	777	826	876	920	945	1063	1086
LB	218	235	264	266	298	293	343	374	424	442	468	534	557
LBS	299	316	345	359	391	387	437	486	536	580	605	723	746

02 037 01 14

S97/S97p..

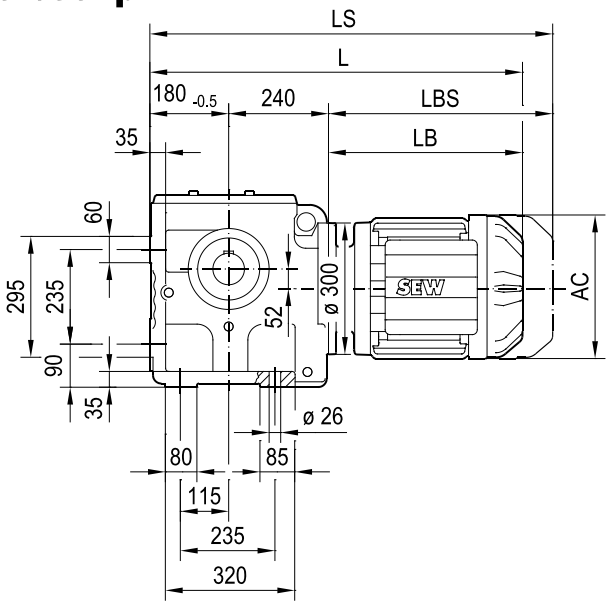

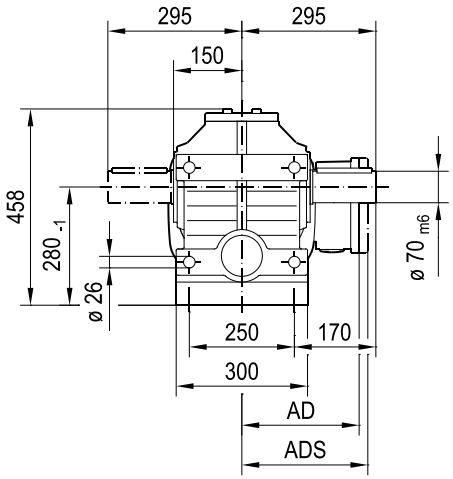

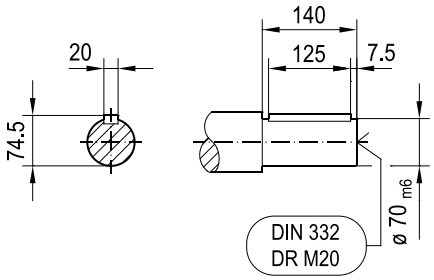

(→ 📖 4.1)	DRN												
	80M	90S	90L	100LS	100L/LM	112M	132S	132M	132L	160..	180..	200L	225..
AC	156	179	179	197	197	221	221	261	261	314	357	394	434
AD	128	140	140	157	157	170	170	228	228	253	268	283	305
ADS	139	150	150	158	158	172	172	228	228	253	268	283	305
L	679	681	713	708	758	789	839	857	883	949	972	1082	1056
LS	760	774	806	802	852	901	951	995	1020	1138	1161	1287	1261
LB	259	261	293	288	338	369	419	437	463	529	552	662	636
LBS	340	354	386	382	432	481	531	575	600	718	741	867	841

02 038 01 14

SF97/SF97p..

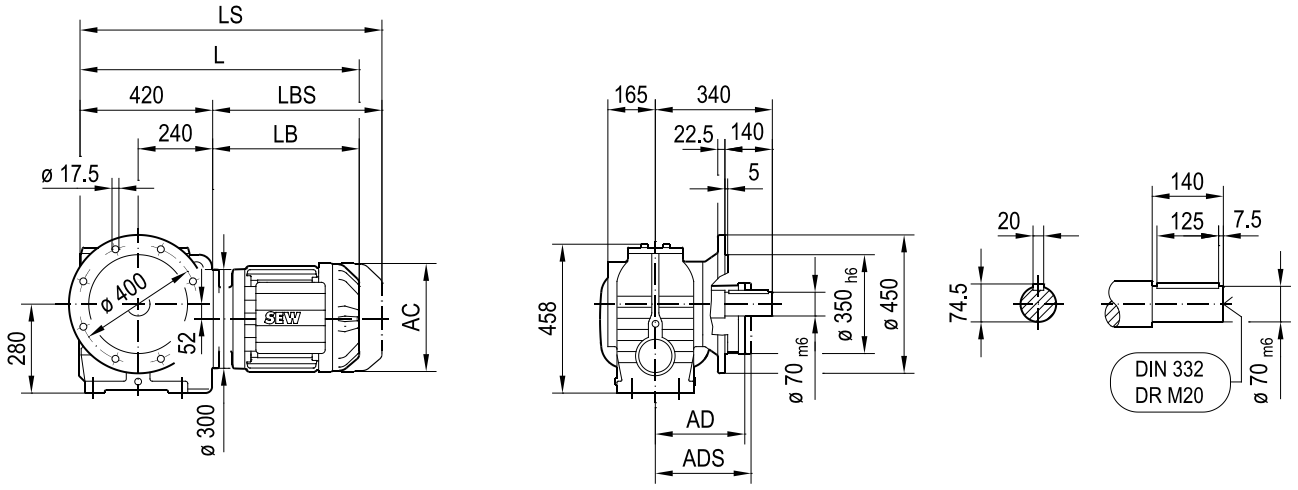

SAF97/SAF97p..

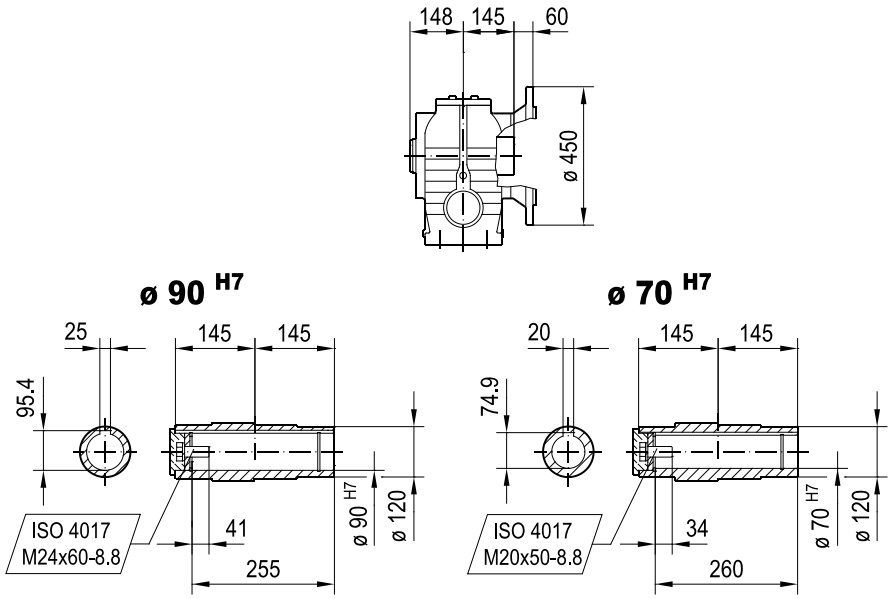

SHF97/SHF97p..

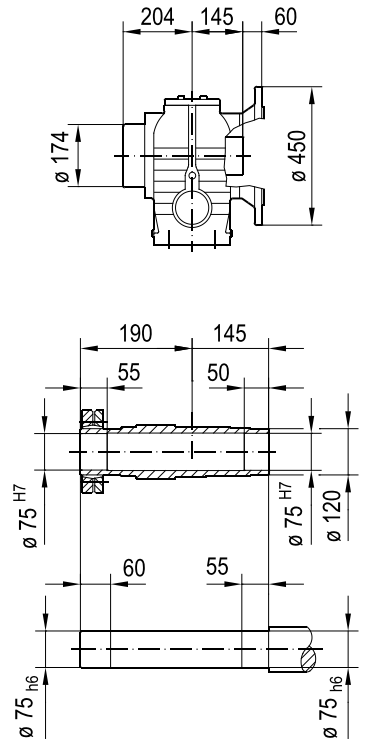

(→ 📖 4.1)	DRN												
	80M	90S	90L	100LS	100L/LM	112M	132S	132M	132L	160..	180..	200L	225..
AC	156	179	179	197	197	221	221	261	261	314	357	394	434
AD	128	140	140	157	157	170	170	228	228	253	268	283	305
ADS	139	150	150	158	158	172	172	228	228	253	268	283	305
L	679	681	713	708	758	789	839	857	883	949	972	1082	1056
LS	760	774	806	802	852	901	951	995	1020	1138	1161	1287	1261
LB	259	261	293	288	338	369	419	437	463	529	552	662	636
LBS	340	354	386	382	432	481	531	575	600	718	741	867	841

02 039 02 14

SA97/SA97p..

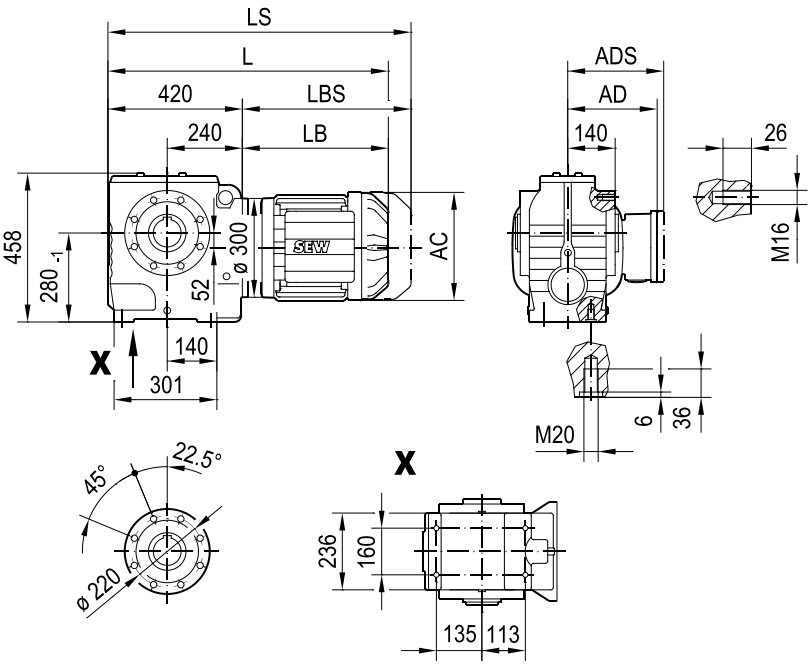

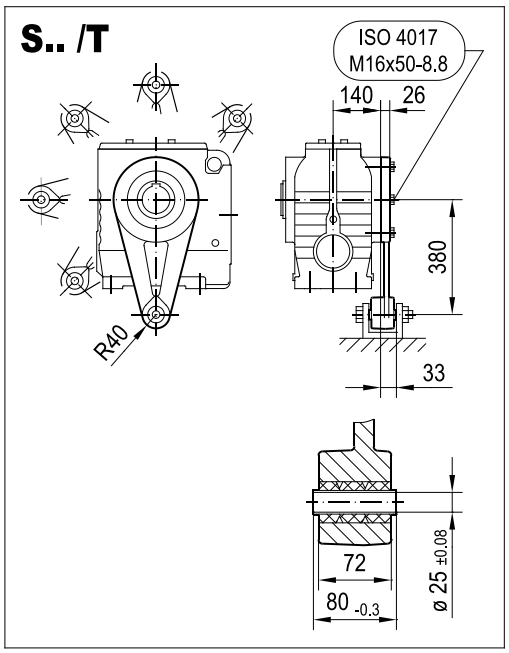

SA97/SA97p..

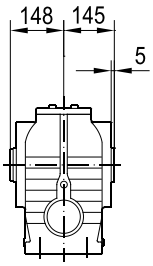

ø 90 H7

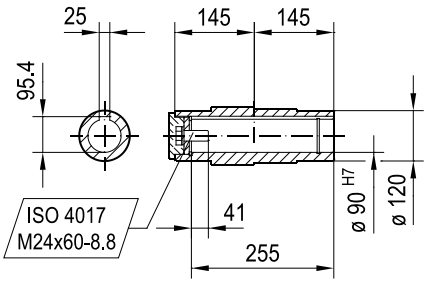

ø 70 H7

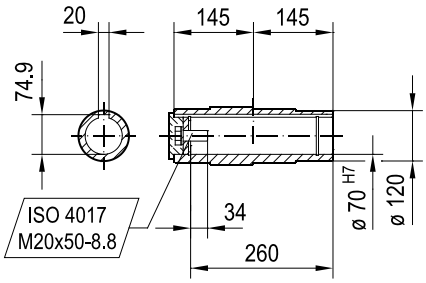

SH97/SH97p..

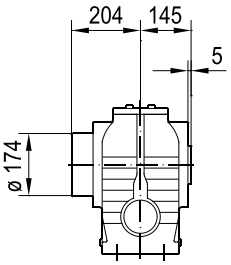

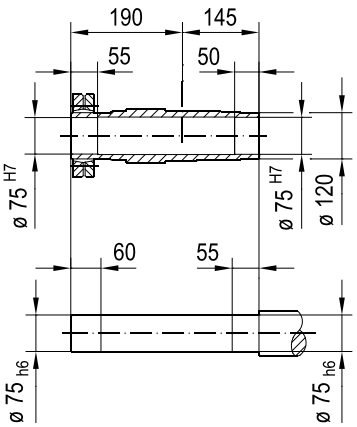

(→ 📖 4.1)	DRN												
	80M	90S	90L	100LS	100L/LM	112M	132S	132M	132L	160..	180..	200L	225..
AC	156	179	179	197	197	221	221	261	261	314	357	394	434
AD	128	140	140	157	157	170	170	228	228	253	268	283	305
ADS	139	150	150	158	158	172	172	228	228	253	268	283	305
L	679	681	713	708	758	789	839	857	883	949	972	1082	1056
LS	760	774	806	802	852	901	951	995	1020	1138	1161	1287	1261
LB	259	261	293	288	338	369	419	437	463	529	552	662	636
LBS	340	354	386	382	432	481	531	575	600	718	741	867	841

SAZ97/SAZ97p..

02 040 01 14

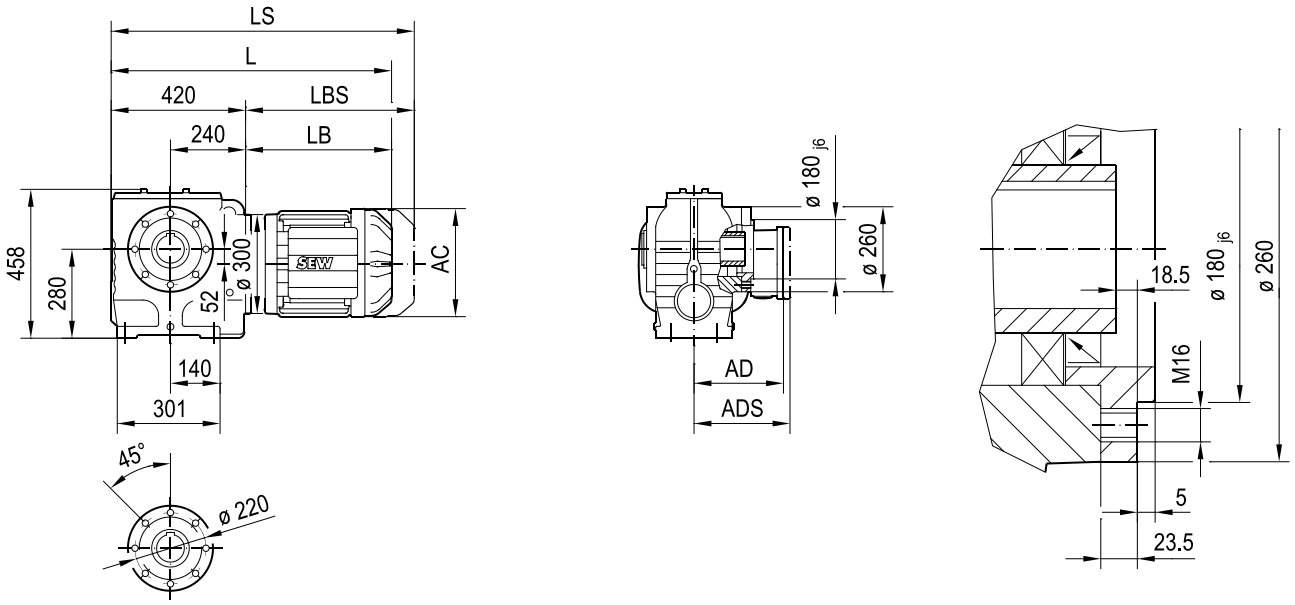

SAZ97/SAZ97p..

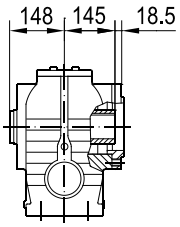

ø 90 H7

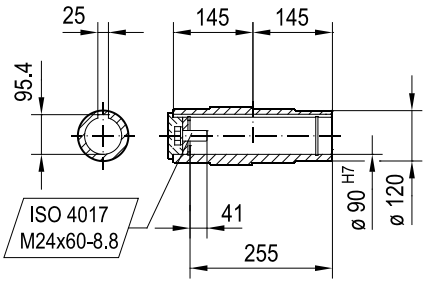

ø 70 H7

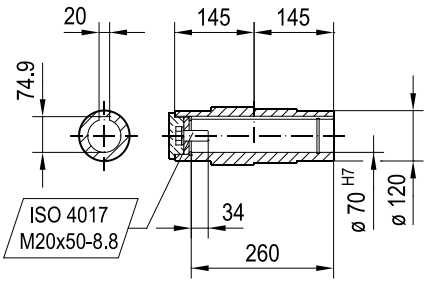

SHZ97/SHZ97p..

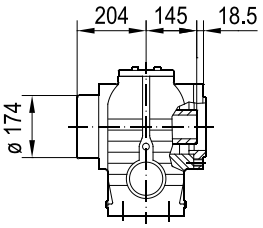

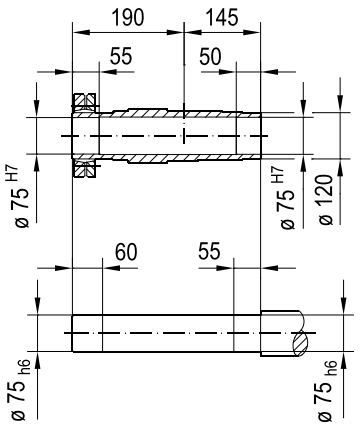

(→ 📖 4.1)	DRN												
	80M	90S	90L	100LS	100L/LM	112M	132S	132M	132L	160..	180..	200L	225..
AC	156	179	179	197	197	221	221	261	261	314	357	394	434
AD	128	140	140	157	157	170	170	228	228	253	268	283	305
ADS	139	150	150	158	158	172	172	228	228	253	268	283	305
L	679	681	713	708	758	789	839	857	883	949	972	1082	1056
LS	760	774	806	802	852	901	951	995	1020	1138	1161	1287	1261
LB	259	261	293	288	338	369	419	437	463	529	552	662	636
LBS	340	354	386	382	432	481	531	575	600	718	741	867	841

02 041 03 14

ST97/ST97p..

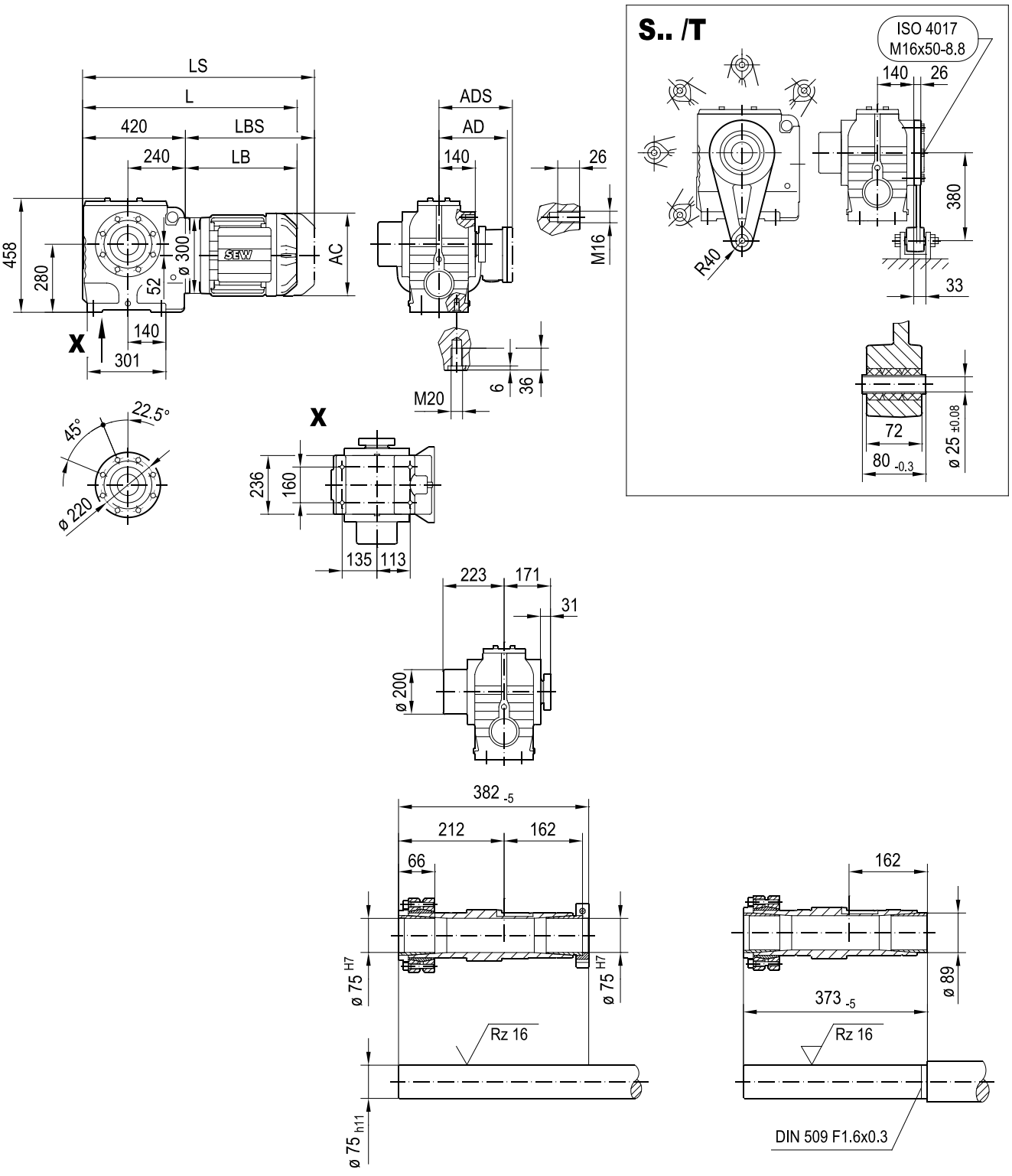

(→ 📖 4.1)	DRN												
	80M	90S	90L	100LS	100L/LM	112M	132S	132M	132L	160..	180..	200L	225..
AC	156	179	179	197	197	221	221	261	261	314	357	394	434
AD	128	140	140	157	157	170	170	228	228	253	268	283	305
ADS	139	150	150	158	158	172	172	228	228	253	268	283	305
L	679	681	713	708	758	789	839	857	883	949	972	1082	1056
LS	760	774	806	802	852	901	951	995	1020	1138	1161	1287	1261
LB	259	261	293	288	338	369	419	437	463	529	552	662	636
LBS	340	354	386	382	432	481	531	575	600	718	741	867	841

4.5.5 Dimension sheets S..R..DRN..

02 042 01 21

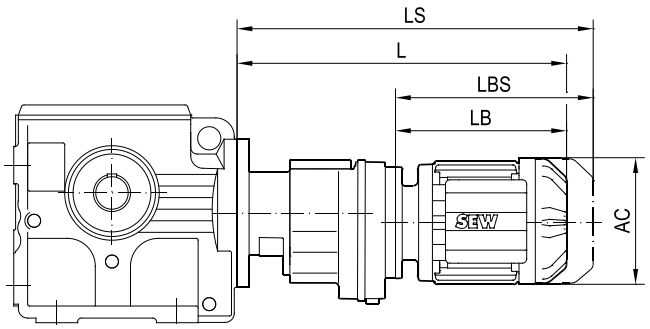

(→ 4.1)	AC	L	LS	LB	LBS
S..37R17 DRN63MS	115	323	379	190	246
S..37R17 DRN63M	115	337	393	204	260
S..37R17 DRN71MS	139	339	406	206	273
S..47R17 DRN63MS	115	323	379	190	246
S..47R17 DRN63M	115	337	393	204	260
S..47R17 DRN71MS	139	339	406	206	273
S..47R17 DRN71M	139	359	426	226	293
S..47R17 DRN80MK	156	370	451	237	318
S..57R17 DRN63M	115	337	393	204	260
S..57R17 DRN71MS	139	339	406	206	273
S..57R17 DRN71M	139	359	426	226	293
S..57R17 DRN80MK	156	370	451	237	318
S..57R17 DRN80M	156	416	497	283	364
S..67R37 DRN71MS	139	371	438	206	273
S..67R37 DRN71M	139	391	458	226	293
S..67R37 DRN80MK	156	402	483	237	318
S..67R37 DRN80M	156	448	529	283	364
S..67R37 DRN90S	179	449	543	284	378
S..77R37 DRN71MS	139	363	430	206	273
S..77R37 DRN80MK	156	394	475	237	318
S..77R37 DRN80M	156	440	521	283	364
S..77R37 DRN90S	179	441	535	284	378
S..77R37 DRN90L	179	473	567	316	410
S..87R57 DRN80MK	156	458	539	230	311
S..87R57 DRN80M	156	504	585	276	357
S..87R57 DRN90S	179	505	599	278	371
S..87R57 DRN90L	179	537	631	310	403
S..87R57 DRN100LS	197	533	626	305	399
S..87R57 DRN100L/LM	197	583	676	355	449
S..97R57 DRN80MK	156	453	534	230	311
S..97R57 DRN90L	179	532	626	310	403
S..97R57 DRN100LS	197	528	621	305	399
S..97R57 DRN100L/LM	197	578	671	355	449
S..97R57 DRN112M	221	609	721	386	498
S..97R57 DRN132S	221	663	775	440	552

4.5.6 Technical data S..37 – 97

Technical data S..37

S..37

i_{tot}	i_s	n_e = 3400 min^{-1}				n_e = 3200 min^{-1}				n_e = 2800 min^{-1}			
		n_a min^{-1}	M_{amax} Nm	P_{Mot} kW	η %	n_a min^{-1}	M_{amax} Nm	P_{Mot} kW	η %	n_a min^{-1}	M_{amax} Nm	P_{Mot} kW	η %
157.43	38/1	21	78	0.31	56	20	80	0.30	56	17	82	0.28	56
144.40		23	76	0.33	57	22	78	0.32	56	19	80	0.29	56
122.94		27	74	0.37	57	26	75	0.36	57	22	78	0.33	57
106.00		32	71	0.41	58	30	72	0.39	58	26	76	0.36	58
98.80		34	70	0.43	58	32	72	0.42	58	28	75	0.38	58
86.36		39	68	0.48	59	37	69	0.45	59	32	72	0.42	59
80.96		41	66	0.49	59	39	68	0.48	59	34	72	0.44	59
71.44		47	55	0.47	59	44	64	0.50	60	39	70	0.48	60
63.33		53	37	0.37	56	50	51	0.46	59	44	67	0.52	60
53.83		63	29	0.35	54	59	32	0.36	55	52	53	0.49	60
55.93	27/2	60	70	0.59	76	57	71	0.56	76	50	72	0.50	75
51.30		66	68	0.62	76	62	70	0.60	76	54	72	0.55	76
43.68		77	66	0.70	77	73	67	0.67	76	64	70	0.62	76
37.66		90	64	0.78	77	84	65	0.75	77	74	68	0.69	77
35.10		96	62	0.81	77	91	64	0.79	77	79	66	0.72	77
30.68		110	61	0.91	78	104	62	0.87	78	91	64	0.79	77
28.76		118	58	0.92	78	111	61	0.91	78	97	64	0.84	78
25.38		133	47	0.85	77	126	53	0.90	78	110	62	0.92	78
22.50		151	31	0.65	75	142	43	0.83	77	124	57	0.95	78
19.13		177	24	0.61	74	167	27	0.63	75	146	44	0.87	78
19.89	24/5	170	42	0.88	85	160	43	0.85	85	140	44	0.76	85
18.24		186	41	0.93	86	175	42	0.90	86	153	44	0.83	85
15.53		218	39	1.0	86	206	40	1.0	86	180	42	0.93	86
13.39		253	37	1.1	86	238	39	1.1	86	209	41	1.0	86
12.48		272	37	1.2*	86	256	38	1.2*	86	224	40	1.1	86
10.91		311	35	1.3*	86	293	36	1.3*	86	256	39	1.2*	86
10.23		332	35	1.4*	86	312	36	1.4*	86	273	38	1.3*	86
9.02		376	31	1.4*	85	354	34	1.5*	86	310	36	1.4*	86
8.00		425	20	1.0	85	400	29	1.4*	85	350	35	1.5*	86
6.80		500	16	1.0	84	470	18	1.0	85	411	29	1.5*	85
6.33	19/5	537	24	1.5*	87	505	27	1.6*	88	442	32	1.7*	88
5.38		631	20	1.5*	87	594	22	1.6*	87	520	26	1.6*	88
4.86		699	18	1.5*	87	658	19	1.5*	87	576	24	1.6*	88
3.97		856	14	1.5*	86	806	15	1.5*	87	705	19	1.6*	88

* P_{Mot_max} = 1.1 kW

S..37

i_{tot}	i_s	n_e = 2200 min^{-1}				n_e = 1700 min^{-1}				n_e = 1400 min^{-1}			
		n_a min^{-1}	M_{amax} Nm	P_{Mot} kW	η %	n_a min^{-1}	M_{amax} Nm	P_{Mot} kW	η %	n_a min^{-1}	M_{amax} Nm	P_{Mot} kW	η %
157.43	38/1	13	87	0.23	54	10	91	0.19	53	8.8	92	0.16	52
144.40		15	86	0.25	55	11	90	0.21	54	9.6	92	0.18	53
122.94		17	83	0.28	56	13	87	0.23	55	11	91	0.20	54
106.00		20	81	0.31	57	16	86	0.26	56	13	88	0.22	55
98.80		22	80	0.33	57	17	85	0.27	56	14	87	0.23	55
86.36		25	78	0.36	58	19	82	0.30	57	16	86	0.26	56
80.96		27	77	0.38	58	20	82	0.31	57	17	85	0.27	56
71.44		30	75	0.41	59	23	80	0.34	58	19	84	0.30	57
63.33		34	73	0.44	60	26	79	0.38	59	22	82	0.33	58
53.83		40	69	0.49	60	31	76	0.42	60	26	80	0.37	59
55.93	27/2	39	77	0.43	74	30	81	0.35	73	25	81	0.29	73
51.30		42	76	0.46	75	33	80	0.38	74	27	81	0.32	73
43.68		50	74	0.52	76	38	78	0.43	75	32	81	0.37	74
37.66		58	72	0.58	76	45	76	0.48	75	37	79	0.41	75
35.10		62	71	0.61	76	48	75	0.50	76	39	78	0.43	75
30.68		71	70	0.68	77	55	73	0.56	76	45	76	0.48	76
28.76		76	68	0.71	77	59	73	0.59	77	48	75	0.50	76
25.38		86	67	0.78	78	66	71	0.65	77	55	74	0.56	76
22.50		97	66	0.86	78	75	70	0.71	78	62	73	0.62	77
19.13		115	63	0.96	79	88	68	0.81	78	73	71	0.70	78
19.89	24/5	110	48	0.66	85	85	50	0.53	84	70	52	0.46	84
18.24		120	47	0.70	85	93	49	0.57	84	76	52	0.50	84
15.53		141	45	0.78	85	109	48	0.65	85	90	50	0.56	84
13.39		164	44	0.88	86	126	47	0.73	85	104	49	0.63	85
12.48		176	43	0.92	86	136	46	0.77	86	112	48	0.66	85
10.91		201	42	1.0	86	155	45	0.85	86	128	48	0.75	86
10.23		215	41	1.1	86	166	45	0.91	86	136	47	0.79	86
9.02		243	40	1.2*	87	188	43	0.98	86	155	46	0.87	86
8.00		275	39	1.3*	86	212	43	1.1	87	175	45	0.95	86
6.80		323	37	1.5*	86	250	41	1.2*	87	205	43	1.1	87
6.33	19/5	347	35	1.4*	88	268	35	1.1	88	221	35	0.93	87
5.38		408	34	1.6*	88	315	34	1.3*	88	260	34	1.1	88
4.86		452	32	1.7*	89	349	33	1.4*	88	288	33	1.1	88
3.97		554	26	1.7*	88	428	32	1.6*	89	352	32	1.3*	88

* P_{Mot_max} = 1.1 kW

S..37

i_{tot}	i_s	n_e = 1100 min^{-1}				n_e = 900 min^{-1}				n_e = 700 min^{-1}			
		n_a min^{-1}	M_{amax} Nm	P_{Mot} kW	η %	n_a min^{-1}	M_{amax} Nm	P_{Mot} kW	η %	n_a min^{-1}	M_{amax} Nm	P_{Mot} kW	η %
157.43	38/1	6.9	92	0.13	51	5.7	92	0.11	50	4.4	92	0.09	48
144.40		7.6	92	0.14	51	6.2	92	0.12	50	4.8	92	0.10	49
122.94		8.9	92	0.17	52	7.3	92	0.14	51	5.6	92	0.11	50
106.00		10	92	0.19	53	8.4	92	0.16	52	6.6	92	0.13	51
98.80		11	92	0.20	54	9.1	92	0.17	53	7.0	92	0.13	51
86.36		12	90	0.22	55	10	92	0.19	54	8.1	92	0.15	52
80.96		13	89	0.23	55	11	92	0.20	54	8.6	92	0.16	53
71.44		15	87	0.25	56	12	91	0.22	55	9.7	92	0.18	53
63.33		17	86	0.28	57	14	89	0.24	56	11	92	0.20	54
53.83		20	84	0.31	58	16	87	0.27	57	13	91	0.22	56
55.93	27/2	19	87	0.25	72	16	91	0.22	71	12	92	0.17	69
51.30		21	87	0.27	72	17	90	0.23	71	13	92	0.19	70
43.68		25	84	0.30	73	20	87	0.26	72	16	92	0.22	71
37.66		29	82	0.34	74	23	86	0.30	73	18	89	0.24	72
35.10		31	82	0.36	74	25	84	0.31	73	19	88	0.26	72
30.68		35	80	0.40	75	29	82	0.34	74	22	87	0.29	73
28.76		38	79	0.42	75	31	82	0.36	74	24	86	0.30	73
25.38		43	78	0.47	76	35	81	0.40	75	27	84	0.33	74
22.50		48	77	0.52	76	40	79	0.44	75	31	82	0.36	74
19.13		57	75	0.59	77	47	78	0.50	76	36	81	0.41	75
19.89	24/5	55	55	0.38	83	45	58	0.33	82	35	60	0.27	81
18.24		60	54	0.41	83	49	56	0.35	83	38	60	0.30	82
15.53		70	53	0.47	84	57	55	0.40	83	45	58	0.33	82
13.39		82	52	0.53	84	67	54	0.45	84	52	56	0.37	83
12.48		88	51	0.56	85	72	53	0.48	84	56	55	0.39	83
10.91		100	50	0.62	85	82	52	0.53	84	64	54	0.43	84
10.23		107	49	0.65	85	87	51	0.56	85	68	54	0.46	84
9.02		121	48	0.72	86	99	50	0.61	85	77	53	0.51	84
8.00		137	47	0.79	86	112	49	0.68	85	87	52	0.56	85
6.80		161	46	0.90	86	132	48	0.77	86	102	51	0.64	85
6.33	19/5	173	45	0.94	87	142	45	0.77	87	110	45	0.61	86
5.38		204	43	1.1	88	167	43	0.86	87	130	43	0.68	87
4.86		226	42	1.1	88	185	42	0.93	88	144	42	0.73	87
3.97		277	40	1.3*	88	226	40	1.1	88	176	40	0.84	88

* P_{Mot_max} = 1.1 kW

S..37

i_{tot}	i_s	n_e = 500 min^{-1}				n_e = 250 min^{-1}				n_e = 10 min^{-1}			
		n_a min^{-1}	M_{amax} Nm	P_{Mot} kW	η %	n_a min^{-1}	M_{amax} Nm	P_{Mot} kW	η %	n_a min^{-1}	M_{amax} Nm	P_{Mot} kW	η %
157.43	38/1	3.1	92	0.07	47	1.5	92	<0.05	46	0.06	92	<0.05	46
144.40		3.4	92	0.07	47	1.7	92	<0.05	46	0.06	92	<0.05	46
122.94		4.0	92	0.08	48	2.0	92	<0.05	46	0.08	92	<0.05	46
106.00		4.7	92	0.09	49	2.3	92	<0.05	46	0.09	92	<0.05	47
98.80		5.0	92	0.10	49	2.5	92	0.05	46	0.10	92	<0.05	47
86.36		5.7	92	0.11	50	2.8	92	0.06	47	0.11	92	<0.05	47
80.96		6.1	92	0.12	50	3.0	92	0.06	47	0.12	92	<0.05	47
71.44		6.9	92	0.13	51	3.4	92	0.07	48	0.13	92	<0.05	47
63.33		7.8	92	0.15	52	3.9	92	0.08	48	0.15	92	<0.05	47
53.83		9.2	92	0.17	53	4.6	92	0.09	49	0.18	92	<0.05	47
55.93	27/2	8.9	92	0.13	68	4.4	92	0.06	67	0.17	92	<0.05	67
51.30		9.7	92	0.14	68	4.8	92	0.07	67	0.19	92	<0.05	67
43.68		11	92	0.16	69	5.7	92	0.08	67	0.22	92	<0.05	67
37.66		13	92	0.18	70	6.6	92	0.10	67	0.26	92	<0.05	67
35.10		14	92	0.20	70	7.1	92	0.10	67	0.28	92	<0.05	67
30.68		16	92	0.22	71	8.1	92	0.12	68	0.32	92	<0.05	67
28.76		17	91	0.23	71	8.6	92	0.12	68	0.34	92	<0.05	67
25.38		19	89	0.25	72	9.8	92	0.14	69	0.39	92	<0.05	67
22.50		22	87	0.28	73	11	92	0.15	69	0.44	92	<0.05	67
19.13		26	85	0.32	74	13	92	0.18	70	0.52	92	<0.05	67
19.89	24/5	25	68	0.22	80	12	72	0.12	79	0.50	72	<0.05	79
18.24		27	66	0.23	81	13	72	0.13	79	0.54	72	<0.05	79
15.53		32	63	0.26	81	16	72	0.15	79	0.64	72	<0.05	79
13.39		37	61	0.29	82	18	72	0.18	80	0.74	72	<0.05	79
12.48		40	59	0.30	82	20	72	0.19	80	0.8	72	<0.05	79
10.91		45	58	0.34	83	22	71	0.21	80	0.91	71	<0.05	79
10.23		48	57	0.35	83	24	70	0.22	81	0.97	70	<0.05	79
9.02		55	56	0.39	83	27	66	0.24	81	1.1	66	<0.05	79
8.00		62	55	0.43	84	31	63	0.25	81	1.2	63	<0.05	79
6.80		73	54	0.49	84	36	61	0.29	82	1.4	61	<0.05	79
6.33	19/5	78	45	0.44	85	39	45	0.23	83	1.5	45	<0.05	80
5.38		92	43	0.49	86	46	43	0.25	83	1.8	43	<0.05	80
4.86		102	42	0.53	86	51	42	0.27	84	2.0	42	<0.05	80
3.97		125	40	0.61	87	62	40	0.31	84	0.06	92	<0.05	80

Technical data S..47

S..47

i_{tot}	i_s	n_e = 3400 min^{-1}				n_e = 3200 min^{-1}				n_e = 2800 min^{-1}			
		n_a min^{-1}	M_{amax} Nm	P_{Mot} kW	η %	n_a min^{-1}	M_{amax} Nm	P_{Mot} kW	η %	n_a min^{-1}	M_{amax} Nm	P_{Mot} kW	η %
201.00	42/1	16	150	0.46	57	15	150	0.44	57	13	150	0.39	56
184.80		18	150	0.50	58	17	150	0.47	58	15	150	0.42	57
158.12		21	150	0.58	59	20	150	0.54	58	17	150	0.48	58
137.05		24	150	0.65	60	23	150	0.62	59	20	150	0.55	59
128.10		26	150	0.69	60	24	150	0.66	60	21	150	0.58	59
110.73		30	138	0.73	60	28	148	0.74	61	25	150	0.66	60
94.08		36	113	0.71	60	34	123	0.73	60	29	146	0.75	61
84.00		40	95	0.68	59	38	107	0.71	60	33	130	0.75	61
71.75		47	58	0.52	56	44	82	0.65	59	39	107	0.72	61

i_{tot}	i_s	n_e = 3400 min^{-1}				n_e = 3200 min^{-1}				n_e = 2800 min^{-1}			
		n_a min^{-1}	M_{amax} Nm	P_{Mot} kW	η %	n_a min^{-1}	M_{amax} Nm	P_{Mot} kW	η %	n_a min^{-1}	M_{amax} Nm	P_{Mot} kW	η %
67.20		50	53	0.51	55	47	68	0.59	58	41	99	0.72	60
56.61		60	40	0.48	53	56	46	0.50	54	49	75	0.66	59
69.39		48	140	0.94	77	46	140	0.88	77	40	140	0.78	76
63.80		53	140	1.0	77	50	140	0.96	77	43	140	0.84	76
54.59		62	140	1.2	78	58	140	1.1	78	51	140	0.98	77
47.32		71	139	1.3	78	67	140	1.3	78	59	140	1.1	78
44.22		76	129	1.3	78	72	139	1.3	78	63	140	1.2	78
38.23	29/2	88	112	1.3	78	83	120	1.3	79	73	139	1.4	79
32.48		104	91	1.3	78	98	100	1.3	78	86	117	1.3	79
29.00		117	76	1.2	77	110	86	1.3	78	96	104	1.3	79
24.77		137	47	0.91	75	129	66	1.2	77	113	87	1.3	78
23.20		146	42	0.87	74	137	54	1.0	76	120	79	1.3	78
19.54		174	32	0.81	72	163	37	0.86	74	143	59	1.1	77
20.33		167	100	2.0*	86	157	100	1.9*	86	137	100	1.7*	86
17.62		192	97	2.3*	86	181	100	2.2*	86	158	100	1.9*	86
16.47		206	90	2.3*	86	194	97	2.3*	86	170	100	2.1*	86
14.24		238	78	2.3*	86	224	83	2.3*	86	196	97	2.3*	86
12.10	27/5	280	63	2.2*	86	264	69	2.2*	86	231	82	2.3*	86
10.80		314	53	2.1*	85	296	60	2.2*	85	259	72	2.3*	86
9.23		368	32	1.5	85	346	45	1.9*	85	303	60	2.2*	86
8.64		393	29	1.4	84	370	37	1.7*	85	324	55	2.2*	86
7.28		467	22	1.3	83	439	25	1.4	84	384	41	1.9*	85
6.83		497	34	2.0*	87	468	37	2.1*	88	409	45	2.2*	88
6.4		531	31	2.0*	87	500	34	2.0*	87	437	42	2.2*	88
5.39	20/5	630	24	1.8*	86	593	27	1.9*	87	519	34	2.1*	88
4.76		714	20	1.8*	85	672	23	1.9*	86	588	29	2.0*	87
4		850	16	1.7*	85	800	18	1.8*	85	700	23	1.9*	87

* P_{Mot_max} = 1.5 kW

S..47

i_{tot}	i_s	n_e = 2200 min^{-1}				n_e = 1700 min^{-1}				n_e = 1400 min^{-1}			
		n_a	M_{amax}	P_{Mot}	η	n_a	M_{amax}	P_{Mot}	η	n_a	M_{amax}	P_{Mot}	η
		min^{-1}	Nm	kW	%	min^{-1}	Nm	kW	%	min^{-1}	Nm	kW	%
201.00		10	167	0.35	55	8.4	170	0.28	54	6.9	170	0.23	53
184.80		11	167	0.37	56	9.1	168	0.30	55	7.5	170	0.25	53
158.12		13	167	0.43	57	10	168	0.34	56	8.8	170	0.29	54
137.05		16	165	0.48	58	12	167	0.38	57	10	168	0.32	55
128.10		17	165	0.51	58	13	167	0.41	57	10	168	0.34	56
110.73	42/1	19	165	0.58	59	15	167	0.46	58	12	168	0.39	57
94.08		23	165	0.67	60	18	167	0.53	59	14	168	0.45	58
84.00		26	162	0.73	61	20	167	0.59	60	16	167	0.50	59
71.75		30	145	0.76	62	23	167	0.68	61	19	167	0.57	60
67.20		32	137	0.76	62	25	164	0.71	61	20	167	0.60	60
56.61		38	115	0.76	62	30	152	0.77	62	24	165	0.69	62
69.39		31	155	0.68	75	24	155	0.54	74	20	155	0.45	73
63.80		34	155	0.74	76	26	155	0.58	75	21	155	0.48	74
54.59		40	155	0.86	77	31	155	0.67	75	25	155	0.56	75
47.32		46	155	0.98	77	35	155	0.77	76	29	155	0.64	75
44.22		49	155	1.0	78	38	155	0.82	77	31	155	0.68	76
38.23	29/2	57	154	1.2	78	44	155	0.93	77	36	155	0.78	77
32.48		67	146	1.3	79	52	155	1.1	78	43	155	0.91	77
29.00		75	137	1.4	79	58	154	1.2	79	48	155	1.0	78
24.77		88	117	1.4	79	68	145	1.3	79	56	155	1.2	79
23.20		94	111	1.4	79	73	142	1.4	79	60	152	1.2	79
19.54		112	92	1.4	79	87	123	1.4	80	71	144	1.4	79
20.33		108	109	1.4	86	83	110	1.1	86	68	110	0.93	85
17.62		124	108	1.6*	87	96	109	1.3	86	79	110	1.1	86
16.47		133	108	1.7*	87	103	109	1.4	86	85	110	1.1	86
14.24		154	108	2.0*	87	119	109	1.6*	87	98	110	1.3	86
12.10	27/5	181	105	2.3*	87	140	109	1.8*	87	115	109	1.5	87
10.80		203	95	2.3*	87	157	108	2.1*	87	129	109	1.7*	87
9.23		238	82	2.4*	87	184	105	2.3*	87	151	109	2.0*	87
8.64		254	77	2.4*	86	196	100	2.4*	87	162	109	2.1*	87
7.28		302	64	2.3*	86	233	86	2.4*	87	192	103	2.4*	87
6.83		322	62	2.4*	89	248	78	2.3*	89	204	78	1.9*	89
6.40		343	58	2.3*	89	265	76	2.4*	89	218	76	2.0*	89
5.39	20/5	408	48	2.3*	89	315	65	2.4*	89	259	74	2.3*	89
4.76		462	42	2.3*	89	357	58	2.4*	89	294	72	2.5*	90
4.00		550	34	2.2*	88	425	48	2.4*	89	350	61	2.5*	90

* P_{Mot_max} = 1.5 kW

S..47

i_{tot}	i_s	n_e = 1100 min^{-1}				n_e = 900 min^{-1}				n_e = 700 min^{-1}			
		n_a	M_{amax}	P_{Mot}	η	n_a	M_{amax}	P_{Mot}	η	n_a	M_{amax}	P_{Mot}	η
		min^{-1}	Nm	kW	%	min^{-1}	Nm	kW	%	min^{-1}	Nm	kW	%
201.00	42/1	5.4	176	0.20	52	4.4	180	0.17	50	3.4	185	0.14	49
184.80		5.9	174	0.21	52	4.8	178	0.18	51	3.7	183	0.15	50
158.12		6.9	172	0.24	53	5.6	176	0.20	52	4.4	180	0.17	51
137.05		8.0	171	0.27	54	6.5	172	0.22	53	5.1	178	0.19	51
128.10		8.5	171	0.28	55	7.0	172	0.24	53	5.4	176	0.19	52
110.73		9.9	169	0.32	56	8.1	171	0.27	54	6.3	174	0.22	53
94.08		11	169	0.37	57	9.5	171	0.31	55	7.4	172	0.25	54
84.00		13	169	0.40	58	10	169	0.34	56	8.3	171	0.27	55
71.75		15	169	0.46	59	12	169	0.39	57	9.7	171	0.31	56
67.20		16	169	0.49	59	13	169	0.41	58	10	171	0.33	56
56.61		19	169	0.57	60	15	169	0.48	59	12	171	0.38	58
69.39	29/2	15	173	0.40	72	12	176	0.33	71	10	180	0.27	70
63.80		17	173	0.43	73	14	175	0.36	72	10	180	0.29	71
54.59		20	171	0.49	74	16	173	0.41	73	12	176	0.33	72
47.32		23	171	0.56	74	19	173	0.47	74	14	175	0.38	72
44.22		24	171	0.60	75	20	171	0.49	74	15	175	0.40	73
38.23		28	169	0.67	76	23	171	0.56	75	18	173	0.45	73
32.48		33	169	0.78	76	27	171	0.66	76	21	171	0.52	74
29.00		37	170	0.88	77	31	171	0.73	76	24	171	0.58	75
24.77		44	169	1.0	78	36	170	0.84	77	28	171	0.67	76
23.20		47	164	1.0	78	38	170	0.89	77	30	171	0.71	76
19.54		56	154	1.2	79	46	165	1.0	78	35	170	0.83	77
20.33	27/5	54	112	0.75	84	44	114	0.63	84	34	116	0.51	83
17.62		62	112	0.86	85	51	113	0.72	84	39	115	0.57	83
16.47		66	112	0.92	85	54	113	0.77	84	42	114	0.61	84
14.24		77	111	1.1	86	63	112	0.87	85	49	113	0.69	84
12.10		90	111	1.2	86	74	111	1.0	86	57	113	0.81	85
10.80		101	111	1.4	86	83	111	1.1	86	64	112	0.89	85
9.23		119	110	1.6*	87	97	111	1.3	86	75	112	1.0	86
8.64		127	109	1.7*	87	104	111	1.4	87	81	112	1.1	86
7.28		151	109	2.0*	87	123	111	1.6*	87	96	111	1.3	87
6.83	20/5	161	95	1.8*	89	131	95	1.5*	88	102	95	1.2	88
6.40		171	93	1.9*	89	140	93	1.6*	88	109	93	1.2	88
5.39		204	89	2.1*	89	166	89	1.8*	89	129	89	1.4	88
4.76		231	87	2.4*	89	189	87	1.9*	89	147	87	1.5	89
4.00		275	78	2.5*	90	225	84	2.2*	89	175	84	1.7*	89

* P_{Mot_max} = 1.5 kW

S..47

i_{tot}	i_s	n_e = 500 min^{-1}				n_e = 250 min^{-1}				n_e = 10 min^{-1}			
		n_a min^{-1}	M_{amax} Nm	P_{Mot} kW	η %	n_a min^{-1}	M_{amax} Nm	P_{Mot} kW	η %	n_a min^{-1}	M_{amax} Nm	P_{Mot} kW	η %
201.00		2.4	185	0.10	47	1.2	185	0.05	47	0.04	185	<0.05	47
184.80		2.7	185	0.11	48	1.3	185	0.06	47	0.05	185	<0.05	47
158.12		3.1	185	0.13	49	1.5	185	0.07	47	0.06	185	<0.05	47
137.05		3.6	185	0.14	50	1.8	185	0.08	47	0.07	185	<0.05	47
128.10		3.9	183	0.15	50	1.9	185	0.08	47	0.07	185	<0.05	47
110.73	42/1	4.5	181	0.17	51	2.2	185	0.09	47	0.09	185	<0.05	48
94.08		5.3	178	0.19	52	2.6	185	0.11	48	0.10	185	<0.05	48
84.00		5.9	176	0.21	53	2.9	185	0.12	49	0.11	185	<0.05	48
71.75		6.9	174	0.24	54	3.4	185	0.14	50	0.13	185	<0.05	48
67.20		7.4	172	0.25	54	3.7	185	0.14	50	0.14	185	<0.05	48
56.61		8.8	172	0.29	56	4.4	181	0.16	51	0.17	181	<0.05	48
69.39		7.2	185	0.20	69	3.6	185	0.10	67	0.14	185	<0.05	67
63.80		7.8	185	0.22	69	3.9	185	0.11	67	0.15	185	<0.05	67
54.59		9.1	185	0.25	70	4.5	185	0.13	67	0.18	185	<0.05	67
47.32		10	181	0.28	71	5.2	185	0.15	68	0.21	185	<0.05	68
44.22		11	180	0.30	71	5.6	185	0.16	68	0.22	185	<0.05	68
38.23	29/2	13	178	0.34	72	6.5	185	0.18	69	0.26	185	<0.05	68
32.48		15	174	0.39	73	7.6	185	0.22	69	0.30	185	<0.05	68
29.00		17	174	0.43	73	8.6	185	0.24	70	0.34	185	<0.05	68
24.77		20	172	0.49	74	10	183	0.27	71	0.40	183	<0.05	68
23.20		21	172	0.52	75	10	181	0.29	71	0.43	181	<0.05	68
19.54		25	172	0.61	76	12	178	0.33	72	0.51	178	<0.05	68
20.33		24	124	0.39	82	12	157	0.25	80	0.49	157	<0.05	79
17.62		28	120	0.43	82	14	149	0.28	80	0.56	149	<0.05	80
16.47		30	118	0.46	82	15	145	0.29	80	0.60	145	<0.05	80
14.24		35	116	0.51	83	17	138	0.31	81	0.70	138	<0.05	80
12.10	27/5	41	115	0.60	84	20	131	0.35	81	0.82	131	<0.05	80
10.80		46	114	0.66	84	23	127	0.38	82	0.92	127	<0.05	80
9.23		54	113	0.76	85	27	121	0.42	82	1.0	121	<0.05	80
8.64		57	113	0.81	85	28	120	0.44	83	1.1	120	<0.05	80
7.28		68	112	0.94	86	34	117	0.51	83	1.3	117	<0.05	80
6.83		73	95	0.84	87	36	95	0.43	84	1.4	95	<0.05	81
6.40		78	93	0.88	87	39	93	0.45	85	1.5	93	<0.05	81
5.39	20/5	92	89	0.99	87	46	89	0.51	85	1.8	89	<0.05	81
4.76		105	87	1.1	88	52	87	0.56	86	2.1	87	<0.05	81
4.00		125	84	1.2	88	62	84	0.64	86	2.5	84	<0.05	81

Technical data S..57

S..57

i_{tot}	i_s	n_e = 3400 min^{-1}				n_e = 3200 min^{-1}				n_e = 2800 min^{-1}			
		n_a min^{-1}	M_{amax} Nm	P_{Mot} kW	η %	n_a min^{-1}	M_{amax} Nm	P_{Mot} kW	η %	n_a min^{-1}	M_{amax} Nm	P_{Mot} kW	η %
201.00		16	270	0.78	61	15	270	0.74	61	13	270	0.66	60
184.80		18	270	0.84	62	17	270	0.79	62	15	270	0.70	61
158.12		21	270	0.97	63	20	270	0.92	63	17	270	0.81	62
137.05	42/1	24	255	1.0	64	23	270	1.0	63	20	270	0.92	63
128.10		26	245	1.1	64	24	255	1.0	64	21	270	0.98	63
110.73		30	215	1.1	64	28	230	1.1	64	25	255	1.1	64
94.08		36	184	1.1	64	34	196	1.1	64	29	225	1.1	64

i_{tot}	i_s	n_e = 3400 min^{-1}				n_e = 3200 min^{-1}				n_e = 2800 min^{-1}			
		n_a	M_{amax}	P_{Mot}	η	n_a	M_{amax}	P_{Mot}	η	n_a	M_{amax}	P_{Mot}	η
		min^{-1}	Nm	kW	%	min^{-1}	Nm	kW	%	min^{-1}	Nm	kW	%
84.00		40	165	1.1	64	38	175	1.1	64	33	200	1.1	64
71.75		47	139	1.1	64	44	149	1.1	64	39	174	1.1	65
67.20		50	128	1.1	64	47	139	1.1	64	41	164	1.1	65
56.61		60	103	1.0	63	56	114	1.1	64	49	138	1.1	65
69.39		48	220	1.4	79	46	220	1.4	79	40	220	1.2	78
63.80		53	220	1.5	79	50	220	1.5	79	43	220	1.3	79
54.59		62	220	1.8	80	58	220	1.7	80	51	220	1.5	79
47.32		71	210	2.0	80	67	220	1.9	80	59	220	1.7	80
44.22		76	197	2.0	80	72	205	1.9	80	63	220	1.8	80
38.23	29/2	88	174	2.0	81	83	184	2.0	81	73	205	2.0	81
32.48		104	148	2.0	81	98	157	2.0	81	86	180	2.0	81
29.00		117	131	2.0	81	110	141	2.0	81	96	162	2.0	81
24.77		137	111	2.0	80	129	120	2.0	81	113	139	2.0	81
23.20		146	102	2.0	80	137	111	2.0	81	120	131	2.0	81
19.54		174	81	1.9	80	163	90	1.9	80	143	109	2.0	81
20.33		167	160	3.2*	88	157	160	3.0	88	137	160	2.6	88
17.62		192	140	3.2*	88	181	149	3.2*	88	158	160	3.0	88
16.47		206	132	3.2*	88	194	140	3.2*	88	170	158	3.2*	88
14.24		238	116	3.3*	88	224	123	3.3*	88	196	139	3.2*	88
12.10	27/5	280	99	3.3*	88	264	105	3.3*	88	231	121	3.3*	88
10.80		314	88	3.3*	88	296	94	3.3*	88	259	108	3.3*	88
9.23		368	73	3.2*	88	346	79	3.3*	88	303	93	3.3*	88
8.64		393	68	3.2*	88	370	74	3.3*	88	324	87	3.3*	88
7.28		467	54	3.0	88	439	60	3.1*	88	384	72	3.3*	88
6.8		497	54	3.2*	89	468	58	3.2*	89	409	69	3.3*	90
6.4		531	50	3.1*	89	500	54	3.2*	89	437	64	3.3*	89
5.4	20/5	630	41	3.1*	89	593	44	3.1*	89	519	53	3.2*	89
4.8		714	35	3.0	88	672	38	3.0	89	588	46	3.2*	89
4.0		850	28	2.8	88	800	31	2.9	88	700	38	3.1*	89

* P_{Mot_max} = 3.0 kW

S..57

i_{tot}	i_s	n_e = 2200 min^{-1}				n_e = 1700 min^{-1}				n_e = 1400 min^{-1}			
		n_a	M_{amax}	P_{Mot}	η	n_a	M_{amax}	P_{Mot}	η	n_a	M_{amax}	P_{Mot}	η
		min^{-1}	Nm	kW	%	min^{-1}	Nm	kW	%	min^{-1}	Nm	kW	%
201.00		10	295	0.58	59	8.4	295	0.46	57	6.9	295	0.39	56
184.80		11	295	0.62	60	9.1	295	0.49	58	7.5	295	0.41	56
158.12		13	295	0.71	61	10	295	0.56	59	8.8	295	0.47	58
137.05		16	295	0.80	62	12	295	0.64	60	10	295	0.54	59
128.10		17	295	0.85	62	13	295	0.68	61	10	295	0.57	59
110.73	42/1	19	290	0.96	63	15	295	0.77	62	12	295	0.65	60
94.08		23	275	1.1	64	18	300	0.91	63	14	295	0.75	62
84.00		26	250	1.1	64	20	285	0.95	63	16	295	0.83	62
71.75		30	220	1.1	65	23	275	1.1	64	19	290	0.94	63
67.20		32	210	1.1	65	25	260	1.1	64	20	285	0.98	64
56.61		38	179	1.1	65	30	225	1.1	65	24	265	1.1	65
69.39		31	245	1.1	77	24	245	0.83	76	20	245	0.69	75
63.80		34	245	1.1	78	26	245	0.89	77	21	245	0.74	76
54.59		40	245	1.3	79	31	245	1.0	78	25	245	0.86	77
47.32		46	245	1.5	79	35	245	1.2	78	29	245	0.98	77
44.22		49	245	1.6	80	38	245	1.3	79	31	245	1.0	78
38.23	29/2	57	245	1.8	80	44	245	1.4	79	36	245	1.2	78
32.48		67	225	2.0	81	52	245	1.7	80	43	245	1.4	79
29.00		75	200	2.0	81	58	245	1.9	80	48	245	1.6	80
24.77		88	177	2.0	81	68	220	2.0	81	56	245	1.8	80
23.20		94	167	2.0	81	73	210	2.0	81	60	245	1.9	81
19.54		112	143	2.1	81	87	183	2.1	81	71	215	2.0	81
20.33		108	168	2.2	87	83	168	1.7	87	68	168	1.4	86
17.62		124	168	2.5	88	96	168	2.0	87	79	168	1.6	86
16.47		133	169	2.7	88	103	168	2.1	87	85	168	1.7	87
14.24		154	169	3.1*	88	119	169	2.4	88	98	169	2.0	87
12.10	27/5	181	150	3.2*	88	140	169	2.8	88	115	169	2.3	88
10.80		203	136	3.3*	88	157	169	3.2*	88	129	169	2.6	88
9.23		238	119	3.4*	88	184	149	3.3*	88	151	169	3.0	88
8.64		254	112	3.4*	89	196	141	3.3*	89	162	166	3.2*	88
7.28		302	96	3.4*	89	233	122	3.4*	89	192	146	3.3*	89
6.8		322	91	3.4*	90	248	100	2.9	90	204	100	2.4	89
6.4		343	85	3.4*	90	265	98	3.0	90	218	98	2.5	89
5.4	20/5	408	72	3.4*	90	315	95	3.5*	90	259	95	2.9	90
4.8		462	63	3.4*	90	357	84	3.5*	90	294	93	3.2*	90
4.0		550	53	3.4*	90	425	71	3.5*	90	350	88	3.6*	90

* P_{Mot_max} = 3.0 kW

S..57

i_{tot}	i_s	n_e = 1100 min^{-1}				n_e = 900 min^{-1}				n_e = 700 min^{-1}			
		n_a	M_{amax}	P_{Mot}	η	n_a	M_{amax}	P_{Mot}	η	n_a	M_{amax}	P_{Mot}	η
		min^{-1}	Nm	kW	%	min^{-1}	Nm	kW	%	min^{-1}	Nm	kW	%
201.00	42/1	5.4	295	0.31	54	4.4	300	0.27	53	3.4	310	0.22	51
184.80		5.9	295	0.34	55	4.8	300	0.29	54	3.7	305	0.23	52
158.12		6.9	295	0.38	56	5.6	295	0.32	55	4.4	300	0.26	53
137.05		8.0	295	0.43	57	6.5	295	0.36	56	5.1	300	0.29	54
128.10		8.5	295	0.46	58	7.0	295	0.38	57	5.4	295	0.31	55
110.73		9.9	295	0.52	59	8.1	295	0.44	58	6.3	295	0.35	56
94.08		11	295	0.60	60	9.5	295	0.50	59	7.4	295	0.40	57
84.00		13	295	0.67	61	10	295	0.56	60	8.3	295	0.44	58
71.75		15	295	0.77	62	12	295	0.64	61	9.7	295	0.51	59
67.20		16	300	0.82	62	13	295	0.68	61	10	295	0.54	60
56.61		19	290	0.93	64	15	300	0.80	62	12	295	0.63	61
69.39	29/2	15	270	0.61	74	12	270	0.50	73	10	270	0.40	72
63.80		17	270	0.65	75	14	270	0.54	74	10	270	0.43	72
54.59		20	270	0.75	76	16	270	0.62	75	12	270	0.50	73
47.32		23	270	0.86	76	19	270	0.71	75	14	270	0.56	74
44.22		24	270	0.92	77	20	270	0.76	76	15	270	0.60	75
38.23		28	270	1.0	78	23	270	0.87	77	18	270	0.69	75
32.48		33	270	1.2	78	27	270	1.0	77	21	270	0.80	76
29.00		37	270	1.4	79	31	270	1.1	78	24	270	0.89	77
24.77		44	270	1.6	80	36	270	1.3	79	28	270	1.0	78
23.20		47	270	1.7	80	38	270	1.4	79	30	270	1.1	78
19.54		56	250	1.8	81	46	270	1.6	80	35	270	1.3	79
20.33	27/5	54	168	1.1	85	44	170	0.93	84	34	172	0.74	84
17.62		62	169	1.3	86	51	169	1.1	85	39	170	0.84	84
16.47		66	168	1.4	86	54	168	1.1	85	42	170	0.90	84
14.24		77	168	1.6	86	63	168	1.3	86	49	170	1.0	85
12.10		90	169	1.9	87	74	169	1.5	86	57	169	1.2	86
10.80		101	169	2.1	87	83	169	1.7	87	64	169	1.3	86
9.23		119	170	2.4	88	97	168	2.0	87	75	168	1.5	87
8.64		127	170	2.6	88	104	169	2.1	87	81	168	1.6	87
7.28		151	170	3.0	88	123	170	2.5	88	96	170	2.0	87
6.8	20/5	161	120	2.3	89	131	120	1.9	89	102	120	1.5	88
6.4		171	117	2.4	89	140	117	1.9	89	109	117	1.5	88
5.4		204	111	2.6	90	166	111	2.2	89	129	111	1.7	89
4.8		231	108	2.9	90	189	108	2.4	90	147	108	1.9	89
4.0		275	103	3.3*	90	225	103	2.7	90	175	103	2.1	89

* P_{Mot_max} = 3.0 kW

S..57

i_{tot}	i_s	n_e = 500 min^{-1}				n_e = 250 min^{-1}				n_e = 10 min^{-1}			
		n_a min^{-1}	M_{amax} Nm	P_{Mot} kW	η %	n_a min^{-1}	M_{amax} Nm	P_{Mot} kW	η %	n_a min^{-1}	M_{amax} Nm	P_{Mot} kW	η %
201.00		2.4	330	0.17	50	1.2	330	0.09	48	0.04	330	<0.05	48
184.80		2.7	330	0.19	50	1.3	330	0.10	48	0.05	330	<0.05	48
158.12		3.1	315	0.20	51	1.5	330	0.11	48	0.06	330	<0.05	48
137.05		3.6	310	0.23	52	1.8	330	0.13	49	0.07	330	<0.05	48
128.10		3.9	305	0.24	53	1.9	330	0.14	49	0.07	330	<0.05	49
110.73	42/1	4.5	300	0.26	54	2.2	330	0.16	50	0.09	330	<0.05	49
94.08		5.3	300	0.30	55	2.6	330	0.18	51	0.10	330	<0.05	49
84.00		5.9	295	0.33	56	2.9	325	0.20	51	0.11	325	<0.05	49
71.75		6.9	295	0.38	57	3.4	310	0.22	52	0.13	310	<0.05	49
67.20		7.4	295	0.40	57	3.7	310	0.23	53	0.14	310	<0.05	49
56.61		8.8	295	0.47	59	4.4	300	0.26	54	0.17	300	<0.05	49
69.39		7.2	300	0.32	70	3.6	300	0.17	68	0.14	300	<0.05	68
63.80		7.8	300	0.35	71	3.9	300	0.18	68	0.15	300	<0.05	68
54.59		9.1	300	0.40	72	4.5	300	0.21	68	0.18	300	<0.05	68
47.32		10	300	0.46	73	5.2	300	0.24	69	0.21	300	<0.05	68
44.22		11	300	0.49	73	5.6	300	0.26	69	0.22	300	<0.05	68
38.23	29/2	13	295	0.55	74	6.5	300	0.29	70	0.26	300	<0.05	68
32.48		15	295	0.64	75	7.6	300	0.34	71	0.30	300	<0.05	68
29.00		17	295	0.71	75	8.6	300	0.38	72	0.34	300	<0.05	68
24.77		20	295	0.82	76	10	300	0.44	73	0.40	300	<0.05	68
23.20		21	295	0.87	76	10	300	0.46	73	0.43	300	<0.05	68
19.54		25	295	1.0	77	12	295	0.54	74	0.51	295	<0.05	68
20.33		24	181	0.57	82	12	215	0.35	80	0.49	215	<0.05	79
17.62		28	175	0.63	83	14	210	0.39	80	0.56	210	<0.05	79
16.47		30	174	0.66	83	15	205	0.40	81	0.60	205	<0.05	79
14.24		35	172	0.75	84	17	198	0.45	81	0.70	198	<0.05	79
12.10	27/5	41	170	0.87	84	20	188	0.50	82	0.82	188	<0.05	79
10.80		46	170	0.97	85	23	184	0.54	82	0.92	184	<0.05	79
9.23		54	170	1.1	85	27	177	0.61	83	1.0	177	<0.05	79
8.64		57	170	1.2	86	28	175	0.64	83	1.1	175	<0.05	79
7.28		68	170	1.4	86	34	172	0.74	84	1.3	172	<0.05	79
6.8		73	120	1.1	87	36	120	0.54	85	1.4	120	<0.05	81
6.4		78	117	1.1	87	39	117	0.56	85	1.5	117	<0.05	81
5.4	20/5	92	111	1.2	88	46	111	0.63	86	1.8	111	<0.05	81
4.8		105	108	1.3	88	52	108	0.69	86	2.1	108	<0.05	81
4.0		125	103	1.5	89	62	103	0.78	87	2.5	103	<0.05	81

Technical data S..67

S..67

i_{tot}	i_s	n_e = 3400 min^{-1}				n_e = 3200 min^{-1}				n_e = 2800 min^{-1}			
		n_a min^{-1}	M_{amax} Nm	P_{Mot} kW	η %	n_a min^{-1}	M_{amax} Nm	P_{Mot} kW	η %	n_a min^{-1}	M_{amax} Nm	P_{Mot} kW	η %
217.41		15	465	1.2	63	14	465	1.2	62	12	465	1.0	62
190.11		17	465	1.4	63	16	465	1.3	63	14	465	1.2	62
180.60		18	465	1.4	63	17	465	1.4	63	15	465	1.2	63
158.45	42/1	21	465	1.6	64	20	465	1.5	64	17	465	1.4	63
134.40		25	465	1.9	65	23	465	1.8	65	20	465	1.6	64
121.33		28	455	2.0	65	26	465	2.0	65	23	465	1.7	65
106.75		31	405	2.1	65	29	430	2.1	66	26	465	2.0	65

i_{tot}	i_s	n_e = 3400 min^{-1}				n_e = 3200 min^{-1}				n_e = 2800 min^{-1}			
		n_a	M_{amax}	P_{Mot}	η	n_a	M_{amax}	P_{Mot}	η	n_a	M_{amax}	P_{Mot}	η
		min^{-1}	Nm	kW	%	min^{-1}	Nm	kW	%	min^{-1}	Nm	kW	%
100.80		33	380	2.1	65	31	410	2.1	66	27	465	2.1	66
85.83		39	320	2.0	65	37	345	2.1	65	32	400	2.1	66
78.00		43	285	2.0	65	41	310	2.0	65	35	365	2.1	66
67.57		50	235	1.9	64	47	260	2.0	65	41	315	2.1	66
58.80		57	184	1.8	62	54	215	1.9	64	47	270	2.1	65
75.06		45	435	2.6	80	42	435	2.4	80	37	435	2.1	79
65.63		51	435	2.9	80	48	435	2.8	80	42	435	2.4	80
62.35		54	435	3.1	81	51	435	2.9	80	44	435	2.6	80
54.70		62	435	3.5	81	58	435	3.3	81	51	435	2.9	81
46.40		73	395	3.7	81	68	415	3.7	81	60	435	3.4	81
41.89		81	355	3.7	81	76	380	3.7	81	66	430	3.7	81
36.85	29/2	92	310	3.7	81	86	335	3.8	81	75	380	3.7	81
34.80		97	295	3.7	81	91	315	3.7	81	80	365	3.8	81
29.63		114	250	3.7	81	107	270	3.8	81	94	310	3.8	81
26.93		126	220	3.6	80	118	240	3.7	81	103	280	3.7	81
23.33		145	182	3.5	80	137	200	3.6	80	120	245	3.8	81
20.30		167	141	3.1	79	157	164	3.4	80	137	205	3.7	81
24.44		139	315	5.2	89	130	315	4.9	89	114	315	4.3	88
23.22		146	315	5.4	89	137	315	5.1	89	120	315	4.5	89
20.37		166	315	6.2*	89	157	315	5.8*	89	137	315	5.1	89
17.28		196	270	6.3*	89	185	290	6.3*	89	162	315	6.0*	89
15.60		217	245	6.3*	89	205	260	6.3*	89	179	295	6.2*	89
13.73	27/5	247	215	6.3*	89	233	230	6.3*	89	203	265	6.4*	89
12.96		262	200	6.2*	89	246	215	6.3*	89	216	250	6.4*	89
11.03		308	169	6.2*	88	290	183	6.3*	89	253	215	6.4*	89
10.03		338	151	6.1*	88	319	164	6.2*	88	279	194	6.4*	89
8.69		391	124	5.8*	88	368	137	6.0*	88	322	166	6.3*	89
7.56		449	95	5.1	87	423	112	5.7*	88	370	141	6.2*	88

* P_{Mot_max} = 5.5 kW

S..67

i_{tot}	i_s	n_e = 2200 min^{-1}				n_e = 1700 min^{-1}				n_e = 1400 min^{-1}			
		n_a min^{-1}	M_{amax} Nm	P_{Mot} kW	η %	n_a min^{-1}	M_{amax} Nm	P_{Mot} kW	η %	n_a min^{-1}	M_{amax} Nm	P_{Mot} kW	η %
217.41	42/1	10	520	0.91	61	7.8	520	0.72	59	6.4	520	0.60	58
190.11		11	520	1.0	62	8.9	520	0.81	60	7.3	520	0.68	59
180.60		12	520	1.1	62	9.4	520	0.85	61	7.7	520	0.71	59
158.45		13	520	1.2	63	10	520	0.95	61	8.8	520	0.80	60
134.40		16	520	1.4	64	12	520	1.1	62	10	520	0.93	61
121.33		18	520	1.5	64	14	520	1.2	63	11	520	1.0	62
106.75		20	520	1.7	65	15	520	1.4	64	13	520	1.1	63
100.80		21	510	1.8	65	16	520	1.4	64	13	520	1.2	63
85.83		25	490	2.0	66	19	520	1.7	65	16	520	1.4	64
78.00		28	465	2.1	66	21	510	1.8	66	17	520	1.5	65
67.57		32	410	2.1	67	25	495	2.0	66	20	520	1.7	66
58.80		37	360	2.1	67	28	460	2.1	67	23	500	1.9	66
75.06	29/2	29	480	1.9	79	22	480	1.5	78	18	480	1.2	77
65.63		33	480	2.1	79	25	480	1.7	78	21	480	1.4	78
62.35		35	480	2.2	80	27	480	1.7	79	22	480	1.5	78
54.70		40	480	2.5	80	31	480	2.0	79	25	480	1.6	78
46.40		47	480	3.0	81	36	480	2.3	80	30	480	1.9	79
41.89		52	480	3.3	81	40	480	2.5	80	33	480	2.1	80
36.85		59	475	3.6	81	46	480	2.9	81	37	480	2.4	80
34.80		63	450	3.7	82	48	480	3.0	81	40	480	2.5	80
29.63		74	395	3.8	82	57	480	3.5	82	47	480	2.9	81
26.93		81	360	3.8	82	63	455	3.7	82	51	480	3.2	81
23.33		94	320	3.9	82	72	405	3.8	82	60	480	3.7	82
20.30		108	280	3.9	82	83	360	3.8	82	68	425	3.7	82
24.44	27/5	90	340	3.6	88	69	340	2.8	87	57	340	2.3	87
23.22		94	340	3.8	88	73	340	3.0	88	60	340	2.5	87
20.37		108	340	4.3	88	83	340	3.4	88	68	340	2.8	87
17.28		127	340	5.1	89	98	340	4.0	88	81	340	3.3	88
15.60		141	340	5.6*	89	108	340	4.4	89	89	340	3.6	88
13.73		160	330	6.2*	89	123	340	5.0	89	101	340	4.1	89
12.96		169	315	6.3*	89	131	340	5.2	89	108	340	4.3	89
11.03		199	275	6.4*	89	154	340	6.2*	89	126	340	5.1	89
10.03		219	250	6.4*	89	169	315	6.3*	89	139	340	5.6*	89
8.69		253	220	6.6*	89	195	280	6.4*	89	161	335	6.3*	89
7.56		291	192	6.6*	89	224	250	6.6*	89	185	295	6.4*	89

* P_{Mot_max} = 5.5 kW

S..67

i_{tot}	i_s	n_e = 1100 min^{-1}				n_e = 900 min^{-1}				n_e = 700 min^{-1}			
		n_a min^{-1}	M_{amax} Nm	P_{Mot} kW	η %	n_a min^{-1}	M_{amax} Nm	P_{Mot} kW	η %	n_a min^{-1}	M_{amax} Nm	P_{Mot} kW	η %
217.41	42/1	5.0	555	0.52	57	4.1	560	0.44	56	3.2	570	0.35	54
190.11		5.7	555	0.58	58	4.7	560	0.49	57	3.6	565	0.40	55
180.60		6.0	555	0.61	58	4.9	555	0.51	57	3.8	565	0.41	55
158.45		6.9	550	0.68	59	5.6	555	0.57	58	4.4	560	0.46	56
134.40		8.1	550	0.78	60	6.6	550	0.65	59	5.2	555	0.53	57
121.33		9.0	550	0.86	61	7.4	550	0.72	60	5.7	555	0.58	58
106.75		10	550	0.96	62	8.4	550	0.80	61	6.5	555	0.65	59
100.80		10	550	1.0	62	8.9	550	0.84	61	6.9	555	0.68	59
85.83		12	550	1.2	63	10	550	0.97	62	8.1	550	0.78	61
78.00		14	550	1.3	64	11	550	1.1	63	8.9	550	0.84	61
67.57		16	550	1.4	65	13	550	1.2	64	10	550	0.96	62
58.80		18	530	1.6	66	15	550	1.4	65	11	550	1.1	63
75.06	29/2	14	525	1.1	76	11	525	0.88	75	9.3	525	0.69	74
65.63		16	525	1.2	77	13	525	1.00	76	10	525	0.79	75
62.35		17	525	1.3	77	14	525	1.0	76	11	525	0.83	75
54.70		20	525	1.4	78	16	525	1.2	77	12	525	0.93	75
46.40		23	525	1.7	78	19	525	1.4	78	15	525	1.1	76
41.89		26	525	1.8	79	21	525	1.5	78	16	525	1.2	77
36.85		29	525	2.1	79	24	525	1.7	79	18	525	1.3	78
34.80		31	525	2.2	80	25	525	1.8	79	20	525	1.4	78
29.63		37	525	2.5	80	30	525	2.1	80	23	525	1.7	79
26.93		40	525	2.8	81	33	525	2.3	80	25	525	1.8	79
23.33		47	525	3.2	81	38	525	2.6	81	30	525	2.1	80
20.30		54	520	3.6	82	44	525	3.0	81	34	525	2.4	80
24.44	27/5	45	355	1.9	86	36	360	1.6	86	28	365	1.3	85
23.22		47	355	2.0	86	38	360	1.7	86	30	365	1.4	85
20.37		54	355	2.3	87	44	355	1.9	86	34	365	1.5	86
17.28		63	355	2.7	87	52	355	2.2	87	40	360	1.8	86
15.60		70	350	3.0	88	57	355	2.5	87	44	355	1.9	86
13.73		80	350	3.3	88	65	355	2.8	88	50	355	2.2	87
12.96		84	350	3.5	88	69	350	2.9	88	54	355	2.3	87
11.03		99	350	4.1	89	81	350	3.4	88	63	355	2.7	88
10.03		109	345	4.5	89	89	350	3.7	88	69	355	3.0	88
8.69		126	345	5.1	89	103	350	4.3	89	80	350	3.3	88
7.56		145	345	5.9*	89	119	345	4.8	89	92	350	3.8	89

* P_{Mot_max} = 5.5 kW

S..67

i_{tot}	i_s	n_e = 500 min^{-1}				n_e = 250 min^{-1}				n_e = 10 min^{-1}			
		n_a min^{-1}	M_{amax} Nm	P_{Mot} kW	η %	n_a min^{-1}	M_{amax} Nm	P_{Mot} kW	η %	n_a min^{-1}	M_{amax} Nm	P_{Mot} kW	η %
217.41	42/1	2.2	570	0.26	52	1.1	570	0.14	50	0.04	570	<0.05	51
190.11		2.6	570	0.30	53	1.3	570	0.16	50	0.05	570	<0.05	51
180.60		2.7	570	0.31	53	1.3	570	0.17	50	0.05	570	<0.05	51
158.45		3.1	570	0.35	54	1.5	570	0.19	51	0.06	570	<0.05	51
134.40		3.7	565	0.40	55	1.8	570	0.22	52	0.07	570	<0.05	51
121.33		4.1	560	0.43	56	2.0	570	0.24	52	0.08	570	<0.05	51
106.75		4.6	560	0.48	57	2.3	570	0.27	53	0.09	570	<0.05	51
100.80		4.9	560	0.51	57	2.4	570	0.28	53	0.09	570	<0.05	51
85.83		5.8	555	0.58	58	2.9	570	0.32	54	0.11	570	<0.05	51
78.00		6.4	555	0.63	59	3.2	570	0.35	55	0.12	570	<0.05	51
67.57		7.3	555	0.71	60	3.6	565	0.39	56	0.14	565	<0.05	51
58.80		8.5	550	0.80	61	4.2	560	0.44	57	0.17	560	<0.05	51
75.06	29/2	6.6	570	0.55	72	3.3	570	0.29	69	0.13	570	<0.05	70
65.63		7.6	570	0.62	73	3.8	570	0.33	70	0.15	570	<0.05	70
62.35		8.0	570	0.65	73	4.0	570	0.34	70	0.16	570	<0.05	70
54.70		9.1	570	0.74	74	4.5	570	0.39	71	0.18	570	<0.05	70
46.40		10	570	0.86	75	5.3	570	0.45	71	0.21	570	<0.05	70
41.89		11	570	0.95	75	5.9	570	0.50	72	0.23	570	<0.05	70
36.85		13	570	1.1	76	6.7	570	0.56	73	0.27	570	<0.05	70
34.80		14	570	1.1	76	7.1	570	0.59	73	0.28	570	<0.05	70
29.63		16	565	1.3	77	8.4	570	0.68	74	0.33	570	<0.05	70
26.93		18	565	1.4	78	9.2	570	0.75	74	0.37	570	<0.05	70
23.33		21	565	1.6	78	10	570	0.85	75	0.42	570	<0.05	70
20.30		24	565	1.8	79	12	570	0.97	76	0.49	570	<0.05	70
24.44	27/5	20	365	0.93	84	10	355	0.47	82	0.40	355	<0.05	81
23.22		21	365	0.98	84	10	355	0.49	82	0.43	355	<0.05	81
20.37		24	380	1.2	85	12	365	0.57	82	0.49	365	<0.05	81
17.28		28	365	1.3	85	14	435	0.80	83	0.57	435	<0.05	81
15.60		32	365	1.4	85	16	430	0.87	83	0.64	430	<0.05	81
13.73		36	365	1.6	86	18	415	0.95	84	0.72	415	<0.05	81
12.96		38	360	1.7	86	19	410	0.99	84	0.77	410	<0.05	81
11.03		45	355	1.9	87	22	390	1.1	84	0.90	390	<0.05	81
10.03		49	355	2.1	87	24	380	1.2	85	0.99	380	<0.05	81
8.69		57	355	2.4	87	28	370	1.3	85	1.1	370	0.06	81
7.56		66	355	2.8	88	33	365	1.5	86	1.3	365	0.06	81

Technical data S..77

S..77

i_{tot}	i_s	n_e = 3400 min^{-1}				n_e = 3200 min^{-1}				n_e = 2800 min^{-1}			
		n_a min^{-1}	M_{amax} Nm	P_{Mot} kW	η %	n_a min^{-1}	M_{amax} Nm	P_{Mot} kW	η %	n_a min^{-1}	M_{amax} Nm	P_{Mot} kW	η %
256.47	40/1	13	1160	2.4	68	12	1160	2.2	67	10	1160	2.0	67
225.26		15	1130	2.6	68	14	1150	2.5	68	12	1160	2.2	68
214.00		15	1110	2.7	68	14	1140	2.6	68	13	1160	2.3	68
189.09		17	1080	3.0	69	16	1100	2.8	69	14	1140	2.6	68
161.60		21	1040	3.3	69	19	1050	3.1	69	17	1090	2.9	69
148.15		22	1010	3.5	70	21	1030	3.4	70	18	1070	3.1	69
130.00		26	970	3.8	70	24	990	3.7	70	21	1030	3.3	70
123.20		27	950	3.9	70	25	970	3.8	70	22	1010	3.4	70

i_{tot}	i_s	n_e = 3400 min^{-1}				n_e = 3200 min^{-1}				n_e = 2800 min^{-1}			
		n_a	M_{amax}	P_{Mot}	η	n_a	M_{amax}	P_{Mot}	η	n_a	M_{amax}	P_{Mot}	η
		min^{-1}	Nm	kW	%	min^{-1}	Nm	kW	%	min^{-1}	Nm	kW	%
107.83		31	900	4.2	70	29	920	4.1	70	25	970	3.8	70
97.14		35	860	4.5	71	32	880	4.3	71	28	930	4.0	71
85.22		39	770	4.6	71	37	820	4.6	71	32	880	4.3	71
75.20		45	675	4.5	70	42	725	4.6	71	37	830	4.6	71
66.67		50	585	4.5	70	47	635	4.5	70	41	745	4.6	71
56.92		59	485	4.4	69	56	530	4.5	70	49	635	4.6	71
75.09		45	1020	5.7	85	42	1020	5.4	85	37	1020	4.7	84
71.33		47	1020	6.0	85	44	1020	5.7	85	39	1020	5.0	84
63.03		53	1020	6.8	85	50	1020	6.4	85	44	1020	5.6	85
53.87		63	980	7.6	86	59	1000	7.3	85	51	1020	6.5	85
49.38		68	950	8.0	86	64	970	7.7	86	56	1010	7.0	85
43.33		78	910	8.7	86	73	930	8.4	86	64	970	7.7	86
41.07	40/3	82	900	9.1	86	77	910	8.7	86	68	950	7.9	86
35.94		94	800	9.2	86	89	850	9.2	86	77	910	8.6	86
32.38		105	725	9.3*	86	98	770	9.3*	86	86	880	9.3	86
28.41		119	635	9.3*	86	112	680	9.3*	86	98	780	9.3	86
25.07		135	560	9.3*	86	127	600	9.3*	86	111	695	9.4	86
22.22		153	485	9.1	85	144	525	9.2	86	126	615	9.4	86
18.97		179	395	8.7	85	168	440	9.1	85	147	520	9.4	86
22.89		148	590	10.*2	90	139	590	9.6*	90	122	590	8.4	90
20.99		161	590	11.1*	90	152	590	10.5*	90	133	590	9.1	90
18.42		184	590	12.7*	90	173	590	11.9*	90	152	590	10.4	90
17.45		194	590	13.4*	90	183	590	12.6*	90	160	590	11.0	90
15.28		222	530	13.8*	90	209	560	13.7*	90	183	590	12.6	90
13.76	34/6	247	480	13.9*	90	232	505	13.7*	90	203	585	13.9*	90
12.07		281	415	13.7*	89	265	445	13.8*	89	231	515	13.9*	90
10.65		319	365	13.7*	89	300	390	13.8*	89	262	455	14.0*	90
9.44		360	315	13.4*	89	338	345	13.8*	89	296	405	14.1*	89
8.06		421	260	13.0*	88	397	285	13.4*	89	347	340	13.9*	89

* P_{Mot_max} = 9.2 kW

S..77

i_{tot}	i_s	n_e = 2200 min^{-1}				n_e = 1700 min^{-1}				n_e = 1400 min^{-1}			
		n_a min^{-1}	M_{amax} Nm	P_{Mot} kW	η %	n_a min^{-1}	M_{amax} Nm	P_{Mot} kW	η %	n_a min^{-1}	M_{amax} Nm	P_{Mot} kW	η %
256.47	40/1	8.5	1260	1.7	66	6.6	1270	1.4	64	5.4	1270	1.1	63
225.26		9.7	1230	1.9	67	7.5	1270	1.5	65	6.2	1270	1.3	64
214.00		10	1220	2.0	67	7.9	1270	1.6	66	6.5	1270	1.4	64
189.09		11	1200	2.2	67	8.9	1240	1.8	66	7.4	1270	1.5	65
161.60		13	1160	2.4	68	10	1220	2.0	67	8.6	1260	1.7	66
148.15		14	1140	2.6	69	11	1200	2.1	68	9.4	1240	1.8	67
130.00		16	1100	2.8	69	13	1170	2.4	68	10	1210	2.0	67
123.20		17	1080	2.9	69	13	1150	2.4	68	11	1200	2.1	68
107.83		20	1040	3.2	70	15	1110	2.7	69	12	1170	2.3	68
97.14		22	1010	3.4	70	17	1090	2.9	70	14	1140	2.5	69
85.22		25	970	3.7	71	19	1050	3.1	70	16	1100	2.7	69
75.20		29	920	4.0	71	22	1010	3.4	71	18	1070	3.0	70
66.67		32	880	4.3	71	25	970	3.6	71	20	1040	3.2	71
56.92		38	830	4.7	72	29	920	4.0	72	24	990	3.6	71
75.09	40/3	29	1100	4.0	84	22	1100	3.1	83	18	1100	2.6	82
71.33		30	1100	4.2	84	23	1100	3.3	83	19	1100	2.7	82
63.03		34	1100	4.8	84	26	1100	3.7	84	22	1100	3.1	83
53.87		40	1100	5.5	85	31	1100	4.3	84	25	1100	3.6	83
49.38		44	1080	5.9	85	34	1100	4.7	84	28	1100	3.9	84
43.33		50	1050	6.5	85	39	1100	5.3	85	32	1100	4.4	84
41.07		53	1030	6.8	85	41	1100	5.6	85	34	1100	4.7	84
35.94		61	980	7.3	86	47	1060	6.2	85	38	1100	5.3	85
32.38		67	960	8.0	86	52	1040	6.7	86	43	1090	5.8	85
28.41		77	920	8.7	86	59	990	7.2	86	49	1050	6.3	86
25.07		87	870	9.3*	86	67	960	7.9	86	55	1020	7.0	86
22.22		99	790	9.5*	86	76	920	8.5	86	63	980	7.5	86
18.97		115	680	9.6*	86	89	860	9.3*	87	73	930	8.3	86
22.89	34/6	96	710	7.9	90	74	705	6.1	89	61	705	5.1	89
20.99		104	710	8.7	90	80	705	6.7	90	66	705	5.5	89
18.42		119	720	10.0*	90	92	710	7.6	90	76	705	6.3	90
17.45		126	720	10.5*	90	97	710	8.0	90	80	710	6.7	90
15.28		143	720	12.0*	90	111	720	9.3*	90	91	710	7.6	90
13.76		159	725	13.5*	90	123	720	10.3*	90	101	710	8.4	90
12.07		182	650	13.8*	90	140	725	11.8*	90	115	720	9.7*	90
10.65		206	580	13.9*	90	159	725	13.4*	90	131	720	11.0*	91
9.44		233	520	14.1*	90	180	655	13.7*	90	148	725	12.4*	91
8.06		272	445	14.1*	90	210	575	14.1*	90	173	680	13.7*	91

* P_{Mot_max} = 9.2 kW

S..77

i_{tot}	i_s	n_e = 1100 min^{-1}				n_e = 900 min^{-1}				n_e = 700 min^{-1}			
		n_a	M_{amax}	P_{Mot}	η	n_a	M_{amax}	P_{Mot}	η	n_a	M_{amax}	P_{Mot}	η
		min^{-1}	Nm	kW	%	min^{-1}	Nm	kW	%	min^{-1}	Nm	kW	%
256.47	40/1	4.2	1270	0.92	62	3.5	1270	0.77	61	2.7	1270	0.61	59
225.26		4.8	1270	1.0	63	3.9	1270	0.86	62	3.1	1270	0.69	60
214.00		5.1	1270	1.1	63	4.2	1270	0.90	62	3.2	1270	0.72	60
189.09		5.8	1270	1.2	64	4.7	1270	1.0	63	3.7	1270	0.81	61
161.60		6.8	1270	1.4	65	5.5	1270	1.2	64	4.3	1270	0.93	62
148.15		7.4	1270	1.5	65	6.0	1270	1.3	64	4.7	1270	1.0	63
130.00		8.4	1260	1.7	66	6.9	1270	1.4	65	5.3	1270	1.1	64
123.20		8.9	1250	1.8	67	7.3	1270	1.5	65	5.6	1270	1.2	64
107.83		10	1220	1.9	67	8.3	1260	1.7	66	6.4	1270	1.3	65
97.14		11	1200	2.1	68	9.2	1250	1.8	67	7.2	1270	1.5	66
85.22		12	1170	2.3	69	10	1220	2.0	68	8.2	1270	1.6	66
75.20		14	1140	2.5	69	11	1190	2.2	68	9.3	1250	1.8	67
66.67		16	1110	2.7	70	13	1160	2.4	69	10	1220	2.0	68
56.92		19	1060	3.0	71	15	1120	2.7	70	12	1190	2.2	69
75.09	40/3	14	1120	2.1	81	11	1130	1.8	81	9.3	1170	1.4	80
71.33		15	1120	2.2	82	12	1130	1.9	81	9.8	1120	1.4	80
63.03		17	1120	2.5	82	14	1120	2.1	81	11	1130	1.6	80
53.87		20	1120	2.9	83	16	1120	2.4	82	12	1120	1.9	81
49.38		22	1120	3.1	83	18	1120	2.6	82	14	1120	2.0	81
43.33		25	1130	3.6	84	20	1120	2.9	83	16	1120	2.3	82
41.07		26	1130	3.8	84	21	1120	3.1	83	17	1120	2.4	82
35.94		30	1150	4.4	84	25	1130	3.5	84	19	1120	2.8	83
32.38		33	1130	4.8	85	27	1130	3.9	84	21	1120	3.1	83
28.41		38	1110	5.3	85	31	1150	4.5	84	24	1130	3.5	84
25.07		43	1080	5.8	85	35	1120	5.0	85	27	1130	3.9	84
22.22		49	1050	6.4	86	40	1100	5.5	85	31	1150	4.5	85
18.97		57	1010	7.1	86	47	1060	6.1	86	36	1120	5.1	85
22.89	34/6	48	695	4.0	89	39	695	3.3	88	30	705	2.6	87
20.99		52	705	4.4	89	42	695	3.5	88	33	705	2.8	88
18.42		59	700	4.9	89	48	700	4.0	89	38	700	3.2	88
17.45		63	700	5.2	89	51	700	4.3	89	40	700	3.3	88
15.28		71	710	6.0	90	58	700	4.8	89	45	700	3.8	89
13.76		79	710	6.6	90	65	700	5.4	89	50	700	4.2	89
12.07		91	710	7.5	90	74	710	6.2	90	57	700	4.8	89
10.65		103	715	8.6	90	84	710	7.0	90	65	710	5.5	90
9.44		116	720	9.7*	91	95	715	7.9	90	74	710	6.1	90
8.06		136	725	11.4*	91	111	720	9.3*	91	86	710	7.2	90

* P_{Mot_max} = 9.2 kW

S..77

i_{tot}	i_s	n_e = 500 min^{-1}				n_e = 250 min^{-1}				n_e = 10 min^{-1}			
		n_a min^{-1}	M_{amax} Nm	P_{Mot} kW	η %	n_a min^{-1}	M_{amax} Nm	P_{Mot} kW	η %	n_a min^{-1}	M_{amax} Nm	P_{Mot} kW	η %
256.47	40/1	1.9	1270	0.45	57	0.97	1270	0.24	55	0.03	1270	<0.05	55
225.26		2.2	1270	0.51	58	1.1	1270	0.27	55	0.04	1270	<0.05	55
214.00		2.3	1270	0.53	58	1.1	1270	0.28	55	0.04	1270	<0.05	55
189.09		2.6	1270	0.59	59	1.3	1270	0.32	55	0.05	1270	<0.05	55
161.60		3.0	1270	0.68	60	1.5	1270	0.37	56	0.06	1270	<0.05	55
148.15		3.3	1270	0.74	61	1.6	1270	0.40	57	0.06	1270	<0.05	55
130.00		3.8	1270	0.83	62	1.9	1270	0.45	57	0.07	1270	<0.05	55
123.20		4.0	1270	0.87	62	2.0	1270	0.47	58	0.08	1270	<0.05	55
107.83		4.6	1270	0.98	63	2.3	1270	0.53	59	0.09	1270	<0.05	55
97.14		5.1	1270	1.1	64	2.5	1270	0.58	59	0.10	1270	<0.05	55
85.22		5.8	1270	1.2	64	2.9	1270	0.65	60	0.11	1270	<0.05	55
75.20		6.6	1270	1.4	65	3.3	1270	0.73	61	0.13	1270	<0.05	55
66.67		7.4	1270	1.5	66	3.7	1270	0.81	62	0.14	1270	<0.05	55
56.92		8.7	1260	1.7	67	4.3	1270	0.93	63	0.17	1270	<0.05	55
75.09	40/3	6.6	1160	1.0	78	3.3	1120	0.52	76	0.13	1120	<0.05	76
71.33		7.0	1110	1.0	78	3.5	1060	0.51	76	0.14	1060	<0.05	76
63.03		7.9	1230	1.3	79	3.9	1200	0.65	76	0.15	1200	<0.05	76
53.87		9.2	1180	1.4	80	4.6	1240	0.78	77	0.18	1240	<0.05	76
49.38		10	1160	1.5	80	5.0	1240	0.85	77	0.20	1240	<0.05	76
43.33		11	1120	1.7	81	5.7	1240	0.96	78	0.23	1240	<0.05	76
41.07		12	1120	1.8	81	6.0	1240	1.0	78	0.24	1240	<0.05	76
35.94		13	1120	2.0	81	6.9	1240	1.1	79	0.27	1240	<0.05	76
32.38		15	1120	2.2	82	7.7	1240	1.3	79	0.30	1240	0.05	76
28.41		17	1120	2.5	82	8.7	1190	1.4	80	0.35	1190	0.06	76
25.07		19	1120	2.8	83	9.9	1170	1.5	80	0.39	1170	0.06	76
22.22		22	1130	3.2	83	11	1130	1.6	81	0.45	1130	0.07	76
18.97		26	1130	3.7	84	13	1120	1.9	81	0.52	1120	0.08	76
22.89	34/6	21	690	1.8	86	10	675	0.92	84	0.43	675	<0.05	83
20.99		23	725	2.1	87	11	740	1.1	85	0.47	740	<0.05	83
18.42		27	705	2.3	87	13	830	1.4	85	0.54	830	0.06	83
17.45		28	705	2.4	87	14	810	1.4	85	0.57	810	0.06	83
15.28		32	705	2.8	88	16	785	1.6	86	0.65	785	0.06	83
13.76		36	695	3.0	88	18	770	1.7	86	0.72	770	0.07	83
12.07		41	695	3.4	88	20	750	1.9	86	0.82	750	0.08	83
10.65		46	695	3.9	89	23	725	2.1	87	0.93	725	0.09	83
9.44		52	705	4.4	89	26	705	2.2	87	1.0	705	0.09	83
8.06		62	705	5.1	90	31	705	2.6	88	1.2	705	0.11	83

Technical data S..87

S..87

i_{tot}	i_s	n_e = 3400 min^{-1}				n_e = 3200 min^{-1}				n_e = 2800 min^{-1}			
		n_a min^{-1}	M_{amax} Nm	P_{Mot} kW	η %	n_a min^{-1}	M_{amax} Nm	P_{Mot} kW	η %	n_a min^{-1}	M_{amax} Nm	P_{Mot} kW	η %
288.00	40/1	11	2030	3.6	70	11	2070	3.4	70	9.7	2070	3.0	70
258.18		13	1990	3.9	71	12	2010	3.7	71	10	2070	3.4	70
222.40		15	1910	4.3	71	14	1950	4.1	71	12	2010	3.8	71
202.96		16	1850	4.6	71	15	1890	4.4	71	13	1970	4.0	71
180.00		18	1800	5.0	72	17	1830	4.8	72	15	1910	4.4	71
151.30		22	1690	5.5	72	21	1730	5.3	72	18	1800	4.9	72

		n_e = 3400 min^{-1}				n_e = 3200 min^{-1}				n_e = 2800 min^{-1}			
i_{tot}	i_s	n_a min^{-1}	M_{amax} Nm	P_{Mot} kW	η %	n_a min^{-1}	M_{amax} Nm	P_{Mot} kW	η %	n_a min^{-1}	M_{amax} Nm	P_{Mot} kW	η %
139.05		24	1630	5.8	72	23	1680	5.6	72	20	1760	5.2	72
123.48		27	1570	6.3	72	25	1600	6.0	72	22	1690	5.6	72
110.40		30	1430	6.4	72	28	1540	6.4	73	25	1620	5.9	73
99.26		34	1260	6.3	72	32	1380	6.4	72	28	1550	6.3	73
86.15		39	1030	6.0	71	37	1150	6.2	72	32	1390	6.5	73
77.14		44	830	5.5	70	41	970	5.9	71	36	1220	6.4	72
64.00		53	500	4.3	65	50	620	4.8	68	43	960	6.2	72
91.20		37	1470	6.7	86	35	1470	6.3	86	30	1470	5.5	85
81.76		41	1470	7.5	86	39	1470	7.0	86	34	1470	6.2	86
70.43		48	1470	8.6	86	45	1470	8.1	86	39	1470	7.1	86
64.27		52	1470	9.4	86	49	1470	8.9	86	43	1470	7.8	86
57.00		59	1470	10.6	87	56	1470	10.0	87	49	1470	8.8	86
47.91		70	1470	12.6	87	66	1470	11.8	87	58	1470	10.4	87
44.03	38/3	77	1470	13.6	87	72	1470	12.8	87	63	1470	11.3	87
39.10		86	1300	13.6	87	81	1400	13.8	87	71	1470	12.6	87
34.96		97	1140	13.4	87	91	1240	13.6	87	80	1440	13.8	87
31.43		108	1000	13.1	87	101	1090	13.4	87	89	1290	13.8	87
27.28		124	810	12.3	86	117	910	12.9	87	102	1110	13.7	87
24.43		139	660	11.3	85	130	775	12.4	86	114	960	13.3	87
20.27		167	395	8.4	83	157	490	9.6	84	138	755	12.7	86
25.50		133	990	15.2*	91	125	990	14.3	91	109	990	12.6	91
21.43		158	990	18.1*	91	149	990	17.0*	91	130	990	14.9	91
19.70		172	990	20*	91	162	990	19*	91	142	990	16.2*	91
17.49		194	870	20*	90	182	930	20*	91	160	990	18.3*	91
15.64	34/6	217	760	19*	90	204	830	20*	90	179	960	20*	91
14.06		241	660	19*	90	227	725	19*	90	199	860	20*	91
12.21		278	540	17.6*	90	262	605	18.5*	90	229	730	19*	90
10.93		311	440	16.0*	89	292	510	17.4*	90	256	645	19*	90
9.07		374	255	11.5	87	352	325	13.5	89	308	500	18.0*	90
7.88		431	200	10.5	86	406	230	11.2	87	355	375	15.6*	89

* P_{Mot_max} =15 kW

S..87

i_{tot}	i_s	n_e = 2200 min^{-1}				n_e = 1700 min^{-1}				n_e = 1400 min^{-1}			
		n_a min^{-1}	M_{amax} Nm	P_{Mot} kW	η %	n_a min^{-1}	M_{amax} Nm	P_{Mot} kW	η %	n_a min^{-1}	M_{amax} Nm	P_{Mot} kW	η %
288.00	40/1	7.6	2210	2.6	69	5.9	2280	2.1	67	4.8	2280	1.7	66
258.18		8.5	2170	2.8	69	6.5	2260	2.3	68	5.4	2280	1.9	67
222.40		9.8	2130	3.2	70	7.6	2210	2.6	69	6.2	2280	2.2	68
202.96		10	2080	3.4	70	8.3	2190	2.8	69	6.8	2260	2.4	68
180.00		12	2020	3.7	71	9.4	2130	3.0	70	7.7	2210	2.6	69
151.30		14	1940	4.1	71	11	2060	3.4	71	9.2	2150	3.0	70
139.05		15	1880	4.4	72	12	2020	3.6	71	10	2100	3.2	70
123.48		17	1820	4.7	72	13	1960	4.0	71	11	2060	3.5	71
110.40		19	1770	5.1	72	15	1900	4.3	72	12	2000	3.7	71
99.26		22	1700	5.4	73	17	1840	4.6	72	14	1960	4.0	72
86.15		25	1620	5.9	73	19	1770	5.0	73	16	1880	4.4	72
77.14		28	1540	6.3	73	22	1700	5.4	73	18	1820	4.8	73
64.00		34	1360	6.7	73	26	1580	6.0	74	21	1700	5.3	73
91.20	38/3	24	1540	4.6	85	18	1520	3.5	84	15	1510	2.9	83
81.76		26	1600	5.3	85	20	1600	4.1	84	17	1600	3.4	84
70.43		31	1600	6.1	86	24	1600	4.8	85	19	1600	3.9	84
64.27		34	1600	6.7	86	26	1600	5.2	85	21	1600	4.3	85
57.00		38	1600	7.5	86	29	1600	5.8	86	24	1600	4.8	85
47.91		45	1600	8.9	87	35	1600	6.9	86	29	1600	5.7	86
44.03		49	1600	9.7	87	38	1600	7.5	86	31	1600	6.2	86
39.10		56	1600	10.8	87	43	1600	8.4	87	35	1600	7.0	86
34.96		62	1600	12.1	87	48	1600	9.4	87	40	1600	7.8	87
31.43		69	1600	13.4	88	54	1600	10.4	87	44	1600	8.6	87
27.28		80	1450	14.0	88	62	1600	11.9	88	51	1600	9.9	87
24.43		90	1310	14.1	88	69	1600	13.3	88	57	1600	11.0	87
20.27		108	1080	14.0	88	83	1420	14.2	88	69	1600	13.2	88
25.50	34/6	86	1240	12.4	91	66	1240	9.6	90	54	1240	7.9	90
21.43		102	1240	14.6	91	79	1240	11.4	91	65	1240	9.4	90
19.70		111	1240	15.9*	91	86	1240	12.3	91	71	1240	10.2	91
17.49		125	1240	17.9*	91	97	1240	13.9	91	80	1240	11.4	91
15.64		140	1230	20*	91	108	1240	15.5*	91	89	1240	12.8	91
14.06		156	1110	20*	91	120	1240	17.2*	91	99	1240	14.2	91
12.21		180	970	20*	91	139	1240	20*	91	114	1240	16.3*	91
10.93		201	870	20*	91	155	1130	20*	91	128	1240	18.2*	91
9.07		242	720	20*	91	187	950	20*	91	154	1140	20*	91
7.88		279	605	20*	90	215	830	21*	91	177	1010	21*	91

* P_{Mot_max} = 15 kW

S..87

i_{tot}	i_s	n_e = 1100 min^{-1}				n_e = 900 min^{-1}				n_e = 700 min^{-1}			
		n_a min^{-1}	M_{amax} Nm	P_{Mot} kW	η %	n_a min^{-1}	M_{amax} Nm	P_{Mot} kW	η %	n_a min^{-1}	M_{amax} Nm	P_{Mot} kW	η %
288.00	40/1	3.8	2400	1.5	65	3.1	2450	1.3	64	2.4	2480	1.0	63
258.18		4.2	2380	1.6	66	3.4	2430	1.4	65	2.7	2470	1.1	63
222.40		4.9	2350	1.8	67	4.0	2400	1.6	66	3.1	2450	1.3	64
202.96		5.4	2330	2.0	67	4.4	2380	1.7	66	3.4	2430	1.4	65
180.00		6.1	2280	2.2	68	5.0	2350	1.8	67	3.8	2400	1.5	65
151.30		7.2	2240	2.5	69	5.9	2310	2.1	68	4.6	2350	1.7	67
139.05		7.9	2190	2.6	69	6.4	2260	2.2	68	5.0	2330	1.8	67
123.48		8.9	2150	2.9	70	7.2	2240	2.5	69	5.6	2310	2.0	68
110.40		9.9	2110	3.1	70	8.1	2190	2.7	70	6.3	2280	2.2	68
99.26		11	2070	3.4	71	9.0	2150	2.9	70	7.0	2240	2.4	69
86.15		12	2000	3.7	72	10	2090	3.2	71	8.1	2190	2.7	70
77.14		14	1940	4.0	72	11	2040	3.5	71	9.0	2150	2.9	70
64.00		17	1840	4.5	73	14	1960	4.0	72	10	2070	3.3	71
91.20	38/3	12	1490	2.3	83	9.8	1480	1.9	82	7.6	1460	1.4	81
81.76		13	1760	3.0	83	11	1760	2.5	83	8.5	1760	1.9	82
70.43		15	1760	3.4	84	12	1760	2.8	83	9.9	1760	2.2	82
64.27		17	1760	3.8	84	14	1760	3.1	84	10	1760	2.4	83
57.00		19	1760	4.2	85	15	1760	3.5	84	12	1760	2.7	83
47.91		22	1760	5.0	85	18	1760	4.1	85	14	1760	3.2	84
44.03		24	1760	5.4	85	20	1760	4.4	85	15	1760	3.5	84
39.10		28	1760	6.0	86	23	1760	5.0	85	17	1760	3.9	85
34.96		31	1760	6.7	86	25	1760	5.5	86	20	1760	4.3	85
31.43		34	1760	7.5	86	28	1760	6.1	86	22	1760	4.8	85
27.28		40	1760	8.6	87	32	1760	7.0	86	25	1760	5.5	86
24.43		45	1760	9.5	87	36	1760	7.8	87	28	1760	6.1	86
20.27		54	1760	11.4	88	44	1760	9.4	87	34	1760	7.3	87
25.50	34/6	43	1340	6.7	90	35	1340	5.6	89	27	1340	4.3	89
21.43		51	1340	8.0	90	41	1340	6.6	90	32	1340	5.1	89
19.70		55	1340	8.7	90	45	1340	7.1	90	35	1340	5.6	89
17.49		62	1340	9.8	91	51	1340	8.0	90	40	1340	6.3	90
15.64		70	1340	10.9	91	57	1340	8.9	90	44	1340	7.0	90
14.06		78	1340	12.1	91	64	1340	9.9	91	49	1340	7.8	90
12.21		90	1340	13.9	91	73	1340	11.4	91	57	1340	8.9	90
10.93		100	1340	15.5*	91	82	1340	12.7	91	64	1340	9.9	91
9.07		121	1340	19*	91	99	1340	15.2*	91	77	1340	11.9	91
7.88		139	1260	20*	92	114	1340	17.5*	92	88	1340	13.7	91

* P_{Mot_max} = 15 kW

S..87

i_{tot}	i_s	n_e = 500 min^{-1}				n_e = 250 min^{-1}				n_e = 10 min^{-1}			
		n_a min^{-1}	M_{amax} Nm	P_{Mot} kW	η %	n_a min^{-1}	M_{amax} Nm	P_{Mot} kW	η %	n_a min^{-1}	M_{amax} Nm	P_{Mot} kW	η %
288.00	40/1	1.7	2500	0.75	61	0.86	2500	0.39	58	0.03	2500	<0.05	58
258.18		1.9	2500	0.83	61	0.96	2500	0.44	58	0.03	2500	<0.05	58
222.40		2.2	2500	0.95	62	1.1	2500	0.50	59	0.04	2500	<0.05	58
202.96		2.4	2480	1.0	63	1.2	2500	0.55	59	0.04	2500	<0.05	58
180.00		2.7	2480	1.1	64	1.3	2500	0.61	60	0.05	2500	<0.05	58
151.30		3.3	2430	1.3	65	1.6	2500	0.71	61	0.06	2500	<0.05	58
139.05		3.5	2430	1.4	65	1.7	2500	0.77	61	0.07	2500	<0.05	58
123.48		4.0	2400	1.5	66	2.0	2500	0.86	62	0.08	2500	<0.05	58
110.40		4.5	2380	1.7	67	2.2	2500	0.95	63	0.09	2500	<0.05	58
99.26		5.0	2330	1.8	67	2.5	2470	1.0	63	0.10	2470	<0.05	58
86.15		5.8	2310	2.1	68	2.9	2450	1.2	64	0.11	2450	0.05	59
77.14		6.4	2260	2.2	69	3.2	2430	1.3	65	0.12	2430	0.06	59
64.00		7.8	2220	2.6	70	3.9	2400	1.5	66	0.15	2400	0.07	59
91.20	38/3	5.4	1450	1.0	80	2.7	1390	0.51	78	0.10	1390	<0.05	78
81.76		6.1	1960	1.6	81	3.0	1880	0.77	78	0.12	1880	<0.05	78
70.43		7.0	1980	1.8	81	3.5	1980	0.93	79	0.14	1980	<0.05	78
64.27		7.7	1980	2.0	82	3.8	1980	1.0	79	0.15	1980	<0.05	78
57.00		8.7	1980	2.2	82	4.3	1980	1.1	80	0.17	1980	<0.05	78
47.91		10	1980	2.6	83	5.2	1980	1.3	80	0.2	1980	0.06	78
44.03		11	1980	2.8	83	5.6	1980	1.5	81	0.22	1980	0.06	78
39.10		12	1980	3.2	84	6.3	1980	1.6	81	0.25	1980	0.07	79
34.96		14	1980	3.5	84	7.1	1980	1.8	82	0.28	1980	0.08	79
31.43		15	1980	3.9	84	7.9	1980	2.0	82	0.31	1980	0.08	79
27.28		18	1980	4.5	85	9.1	1980	2.3	83	0.36	1980	0.10	79
24.43		20	1980	5.0	85	10	1980	2.6	83	0.40	1980	0.11	79
20.27		24	1980	5.9	86	12	1980	3.1	84	0.49	1980	0.13	79
25.50	34/6	19	1430	3.3	88	9.8	1390	1.7	86	0.39	1390	0.07	85
21.43		23	1420	3.9	88	11	1510	2.1	87	0.46	1510	0.09	85
19.70		25	1410	4.2	89	12	1570	2.4	87	0.50	1570	0.10	85
17.49		28	1390	4.7	89	14	1570	2.7	87	0.57	1570	0.11	85
15.64		31	1390	5.2	89	15	1540	2.9	87	0.63	1540	0.12	85
14.06		35	1390	5.8	90	17	1510	3.2	88	0.71	1510	0.13	85
12.21		40	1390	6.6	90	20	1460	3.5	88	0.81	1460	0.15	85
10.93		45	1390	7.4	90	22	1430	3.9	89	0.91	1430	0.16	85
9.07		55	1410	9.0	91	27	1390	4.5	89	1.1	1390	0.19	85
7.88		63	1410	10.3	91	31	1390	5.2	89	1.2	1390	0.22	85

Technical data S..97

S..97

i_{tot}	i_s	n_e = 3400 min^{-1}				n_e = 3200 min^{-1}				n_e = 2800 min^{-1}			
		n_a min^{-1}	M_{amax} Nm	P_{Mot} kW	η %	n_a min^{-1}	M_{amax} Nm	P_{Mot} kW	η %	n_a min^{-1}	M_{amax} Nm	P_{Mot} kW	η %
286.40	40/1	11	3520	6.0	73	11	3590	5.8	73	9.7	3700	5.2	72
262.22		12	3450	6.4	73	12	3520	6.2	73	10	3630	5.6	73
231.67		14	3310	6.9	73	13	3380	6.7	73	12	3520	6.1	73
196.52		17	3120	7.7	74	16	3210	7.4	74	14	3350	6.8	73
180.95		18	3030	8.1	74	17	3120	7.8	74	15	3250	7.2	74
161.74		21	2910	8.7	74	19	2970	8.3	74	17	3120	7.7	74
145.60		23	2760	9.1	74	21	2850	8.9	74	19	3000	8.2	74

i_{tot}	i_s	n_e = 3400 min^{-1}				n_e = 3200 min^{-1}				n_e = 2800 min^{-1}			
		n_a min^{-1}	M_{amax} Nm	P_{Mot} kW	η %	n_a min^{-1}	M_{amax} Nm	P_{Mot} kW	η %	n_a min^{-1}	M_{amax} Nm	P_{Mot} kW	η %
131.85		25	2660	9.7	74	24	2740	9.4	74	21	2880	8.6	74
116.92		29	2320	9.6	74	27	2550	9.8	74	23	2740	9.2	74
105.71		32	1980	9.1	73	30	2210	9.5	74	26	2630	9.8	74
89.60		37	1280	7.3	70	35	1670	8.6	72	31	2210	9.8	74
78.26		43	920	6.2	67	40	1040	6.5	69	35	1770	9.1	73
65.45		51	675	5.7	64	48	775	6.0	66	42	1030	6.7	69
80.85		42	3150	15.7	88	39	3150	14.8	88	34	3150	13.0	88
71.43		47	3090	17.4	88	44	3150	16.8	88	39	3150	14.7	88
60.59		56	2910	19	88	52	2970	19	88	46	3120	17.1	88
55.79		60	2820	20	89	57	2880	20	89	50	3030	18.0	88
49.87		68	2710	22	89	64	2760	21	89	56	2910	19	89
44.89	37/3	75	2430	22	89	71	2630	22	89	62	2790	21	89
40.65		83	2170	22	88	78	2350	22	89	68	2680	22	89
36.05		94	1830	21	88	88	2020	21	88	77	2400	22	89
32.60		104	1560	19	88	98	1760	21	88	85	2150	22	89
27.63		123	1010	15.2	86	115	1320	18.4	87	101	1740	21	88
24.13		140	725	12.7	84	132	820	13.4	85	116	1390	19	88
26.39		128	1750	26*	92	121	1750	24*	92	106	1750	21	92
23.59		144	1750	29*	92	135	1750	27*	92	118	1750	24*	92
21.23		160	1750	32*	91	150	1750	30*	92	131	1750	26*	92
19.23		176	1550	31*	91	166	1680	32*	91	145	1750	29*	92
17.05	35/6	199	1320	30*	91	187	1450	31*	91	164	1730	33*	92
15.42		220	1110	28*	91	207	1260	30*	91	181	1540	32*	91
13.07		260	725	22	90	244	940	27*	91	214	1240	31*	91
11.41		297	515	18.1	89	280	585	19	90	245	1000	28*	91
9.55		356	375	16.0	87	335	435	17.3	88	293	580	20	90
8.26		411	290	14.6	86	387	335	15.6	87	338	455	18.1	89

* P_{Mot_max} = 22 kW

S..97

i_{tot}	i_s	n_e = 2200 min^{-1}				n_e = 1700 min^{-1}				n_e = 1400 min^{-1}			
		n_a min^{-1}	M_{amax} Nm	P_{Mot} kW	η %	n_a min^{-1}	M_{amax} Nm	P_{Mot} kW	η %	n_a min^{-1}	M_{amax} Nm	P_{Mot} kW	η %
286.40	40/1	7.6	3920	4.4	72	5.9	4000	3.5	70	4.8	4000	3.0	69
262.22		8.3	3840	4.7	72	6.4	4000	3.8	71	5.3	4000	3.2	70
231.67		9.4	3770	5.2	72	7.3	3960	4.3	72	6.0	4000	3.6	71
196.52		11	3580	5.8	73	8.6	3840	4.8	72	7.1	4000	4.2	71
180.95		12	3510	6.1	73	9.3	3770	5.1	73	7.7	3920	4.4	72
161.74		13	3410	6.6	74	10	3650	5.5	73	8.6	3840	4.8	72
145.60		15	3270	7.0	74	11	3550	5.9	73	9.6	3730	5.2	73
131.85		16	3170	7.5	74	12	3440	6.3	74	10	3650	5.6	73
116.92		18	3020	8.0	74	14	3340	6.9	74	11	3510	6.0	74
105.71		20	2930	8.6	75	16	3210	7.3	74	13	3440	6.5	74
89.60		24	2730	9.4	75	18	3020	8.0	75	15	3240	7.1	74
78.26		28	2540	10.0	75	21	2870	8.7	75	17	3080	7.7	75
65.45		33	2120	10.0	75	25	2650	9.6	75	21	2900	8.6	75
80.85	37/3	27	3300	10.8	87	21	3270	8.3	87	17	3230	6.8	86
71.43		30	3300	12.1	88	23	3300	9.4	87	19	3300	7.8	87
60.59		36	3300	14.3	88	28	3300	11.1	88	23	3300	9.2	87
55.79		39	3270	15.3	88	30	3300	12.0	88	25	3300	9.9	87
49.87		44	3170	16.6	88	34	3300	13.4	88	28	3300	11.1	88
44.89		49	3050	17.7	89	37	3300	14.8	88	31	3300	12.3	88
40.65		54	2950	19	89	41	3230	16.0	88	34	3300	13.5	88
36.05		61	2810	20	89	47	3110	17.3	89	38	3300	15.2	88
32.60		67	2700	21	89	52	2980	18.3	89	42	3200	16.3	89
27.63		79	2390	22	89	61	2810	20	89	50	3010	18.0	89
24.13		91	2060	22	89	70	2670	22	89	58	2870	20	89
26.39	35/6	83	2550	24*	92	64	2600	19	92	53	2600	15.8	92
23.59		93	2450	26*	92	72	2600	21	92	59	2600	17.6	92
21.23		103	2380	28*	92	80	2570	23*	92	65	2600	20	92
19.23		114	2280	30*	92	88	2500	25*	92	72	2600	21	92
17.05		129	2170	32*	92	99	2400	27*	92	82	2570	24*	92
15.42		142	2040	33*	92	110	2300	29*	92	90	2470	25*	92
13.07		168	1720	33*	92	130	2170	32*	92	107	2330	28*	92
11.41		192	1480	33*	92	148	2000	34*	92	122	2210	31*	92
9.55		230	1200	32*	91	178	1670	34*	92	146	2040	34*	92
8.26		266	980	30*	91	205	1440	34*	92	169	1770	34*	92

* P_{Mot_max} = 22 kW

S..97

i_{tot}	i_s	n_e = 1100 min^{-1}				n_e = 900 min^{-1}				n_e = 700 min^{-1}			
		n_a min^{-1}	M_{amax} Nm	P_{Mot} kW	η %	n_a min^{-1}	M_{amax} Nm	P_{Mot} kW	η %	n_a min^{-1}	M_{amax} Nm	P_{Mot} kW	η %
286.40	40/1	3.8	4200	2.5	68	3.1	4200	2.1	67	2.4	4200	1.6	66
262.22		4.1	4200	2.7	69	3.4	4200	2.2	68	2.6	4200	1.8	66
231.67		4.7	4200	3.0	70	3.8	4200	2.5	68	3.0	4200	2.0	67
196.52		5.5	4160	3.5	70	4.5	4200	2.9	69	3.5	4200	2.3	68
180.95		6.0	4120	3.7	71	4.9	4200	3.1	70	3.8	4200	2.5	69
161.74		6.8	4030	4.0	71	5.5	4160	3.4	71	4.3	4200	2.8	69
145.60		7.5	3950	4.3	72	6.1	4080	3.7	71	4.8	4200	3.0	70
131.85		8.3	3880	4.7	72	6.8	4030	4.0	72	5.3	4200	3.3	70
116.92		9.4	3760	5.1	73	7.6	3910	4.4	72	5.9	4120	3.6	71
105.71		10	3650	5.4	73	8.5	3840	4.7	73	6.6	4030	3.9	72
89.60		12	3500	6.1	74	10	3690	5.3	73	7.8	3910	4.4	72
78.26		14	3370	6.7	74	11	3580	5.8	74	8.9	3800	4.9	73
65.45		16	3170	7.4	75	13	3400	6.6	75	10	3650	5.5	74
80.85	37/3	13	3230	5.4	86	11	3200	4.4	85	8.6	3170	3.4	84
71.43		15	3600	6.7	86	12	3600	5.5	86	9.7	3600	4.4	85
60.59		18	3600	7.9	87	14	3600	6.5	86	11	3600	5.1	85
55.79		19	3600	8.6	87	16	3600	7.0	86	12	3600	5.5	86
49.87		22	3600	9.5	87	18	3600	7.8	87	14	3600	6.2	86
44.89		24	3600	10.6	88	20	3600	8.7	87	15	3600	6.8	86
40.65		27	3600	11.6	88	22	3600	9.6	87	17	3600	7.5	87
36.05		30	3530	12.8	88	24	3600	10.7	88	19	3600	8.4	87
32.60		33	3420	13.7	88	27	3600	11.8	88	21	3600	9.3	87
27.63		39	3260	15.4	89	32	3460	13.4	88	25	3600	10.9	88
24.13		45	3130	16.8	89	37	3320	14.7	89	29	3560	12.3	88
26.39	35/6	41	2650	12.7	91	34	2620	10.3	91	26	2620	8.0	91
23.59		46	2650	14.1	92	38	2650	11.6	91	29	2620	9.0	91
21.23		51	2650	15.7	92	42	2650	12.9	91	32	2620	9.9	91
19.23		57	2650	17.3	92	46	2650	14.2	92	36	2620	11.0	91
17.05		64	2670	20	92	52	2650	16.0	92	41	2650	12.5	91
15.42		71	2670	22*	92	58	2650	17.6	92	45	2650	13.8	92
13.07		84	2540	24*	92	68	2670	21	92	53	2650	16.2	92
11.41		96	2420	26*	92	78	2590	23*	92	61	2650	18.5	92
9.55		115	2280	30*	92	94	2440	26*	93	73	2650	22	92
8.26		133	2140	32*	92	108	2320	29*	93	84	2540	24*	93

* P_{Mot_max} = 22 kW

S..97

i_{tot}	i_s	n_e = 500 min^{-1}				n_e = 250 min^{-1}				n_e = 10 min^{-1}			
		n_a min^{-1}	M_{amax} Nm	P_{Mot} kW	η %	n_a min^{-1}	M_{amax} Nm	P_{Mot} kW	η %	n_a min^{-1}	M_{amax} Nm	P_{Mot} kW	η %
286.40	40/1	1.7	4200	1.2	64	0.87	4200	0.64	60	0.03	4200	<0.05	60
262.22		1.9	4200	1.3	64	0.95	4200	0.69	61	0.03	4200	<0.05	60
231.67		2.1	4200	1.5	65	1	4200	0.77	61	0.04	4200	<0.05	60
196.52		2.5	4200	1.7	66	1.2	4200	0.90	62	0.05	4200	<0.05	60
180.95		2.7	4200	1.8	67	1.3	4200	0.97	63	0.05	4200	<0.05	60
161.74		3	4200	2.0	67	1.5	4200	1.1	63	0.06	4200	<0.05	60
145.60		3.4	4200	2.2	68	1.7	4200	1.2	64	0.06	4200	0.05	60
131.85		3.7	4200	2.4	69	1.8	4200	1.3	65	0.07	4200	0.06	60
116.92		4.2	4200	2.7	69	2.1	4200	1.4	65	0.08	4200	0.06	60
105.71		4.7	4200	3.0	70	2.3	4200	1.6	66	0.09	4200	0.07	60
89.60		5.5	4160	3.4	71	2.7	4200	1.8	67	0.11	4200	0.08	60
78.26		6.3	4080	3.8	72	3.1	4200	2.1	68	0.12	4200	0.09	60
65.45		7.6	3910	4.3	73	3.8	4200	2.4	69	0.15	4200	0.11	60
80.85	37/3	6.1	3110	2.4	83	3	3010	1.2	81	0.12	3010	<0.05	80
71.43		6.9	4200	3.7	84	3.4	4160	1.9	82	0.13	4160	0.08	80
60.59		8.2	4200	4.3	84	4.1	4080	2.1	82	0.16	4080	0.09	80
55.79		8.9	4200	4.7	85	4.4	4200	2.4	82	0.17	4200	0.10	80
49.87		10	4200	5.2	85	5	4200	2.7	83	0.20	4200	0.11	80
44.89		11	4160	5.7	86	5.5	4200	2.9	83	0.22	4200	0.12	80
40.65		12	4120	6.2	86	6.1	4200	3.2	84	0.24	4200	0.13	80
36.05		13	4080	6.9	86	6.9	4200	3.6	84	0.27	4200	0.15	80
32.60		15	3990	7.4	87	7.6	4200	4.0	84	0.30	4200	0.17	80
27.63		18	3910	8.5	87	9	4200	4.7	85	0.36	4200	0.20	80
24.13		20	3800	9.4	87	10	4200	5.3	85	0.41	4200	0.23	80
26.39	35/6	18	2590	5.7	90	9.4	2540	2.9	88	0.37	2540	0.12	86
23.59		21	2590	6.4	90	10	2540	3.2	88	0.42	2540	0.13	86
21.23		23	2590	7.1	90	11	2570	3.6	89	0.47	2570	0.15	86
19.23		26	2620	7.9	91	13	2570	3.9	89	0.52	2570	0.16	86
17.05		29	2620	8.9	91	14	2570	4.4	89	0.58	2570	0.18	86
15.42		32	2620	9.8	91	16	2570	4.9	90	0.64	2570	0.20	86
13.07		38	2650	11.6	91	19	2590	5.8	90	0.76	2590	0.24	86
11.41		43	2650	13.3	92	21	2590	6.6	90	0.87	2590	0.27	87
9.55		52	2650	15.8	92	26	2620	7.9	91	1.0	2620	0.33	87
8.26		60	2650	18.2	92	30	2620	9.1	91	1.2	2620	0.38	87

4.5.7 Technical data S..37p – 97p

Technical data S..37p

S..37p

i_{tot}	i_s	n_e = 3400 min^{-1}				n_e = 3200 min^{-1}				n_e = 2800min^{-1}			
		n_a min^{-1}	M_{amax} Nm	P_{Mot} kW	η %	n_a min^{-1}	M_{amax} Nm	P_{Mot} kW	η %	n_a min^{-1}	M_{amax} Nm	P_{Mot} kW	η %
157.43	38/1	21	94	0.31	69	20	94	0.29	69	17	94	0.26	68
144.40		23	94	0.34	69	22	94	0.32	69	19	94	0.28	69
122.94		27	89	0.37	69	26	91	0.36	69	22	95	0.33	69
106.00		32	84	0.41	69	30	86	0.39	69	26	91	0.36	70
98.80		34	81	0.42	69	32	83	0.41	69	28	88	0.38	70
86.36		39	77	0.46	69	37	79	0.44	69	32	83	0.41	70

i_{tot}	i_s	n_e = 3400 min^{-1}				n_e = 3200 min^{-1}				n_e = 2800min^{-1}			
		n_a min^{-1}	M_{amax} Nm	P_{Mot} kW	η %	n_a min^{-1}	M_{amax} Nm	P_{Mot} kW	η %	n_a min^{-1}	M_{amax} Nm	P_{Mot} kW	η %
80.96		41	75	0.48	69	39	77	0.46	69	34	81	0.42	70
71.44		47	71	0.51	69	44	73	0.49	69	39	77	0.45	70
63.33		53	62	0.51	68	50	69	0.53	69	44	73	0.49	70
53.83		63	45	0.45	66	59	53	0.49	67	52	69	0.54	70
55.93		60	95	0.72	84	57	97	0.69	84	50	103	0.64	84
51.30		66	91	0.75	84	62	94	0.73	84	54	99	0.67	84
43.68		77	86	0.83	84	73	88	0.80	84	64	93	0.74	85
37.66		90	81	0.91	84	84	83	0.87	84	74	87	0.80	85
35.10	27/2	96	78	0.94	84	91	80	0.90	84	79	85	0.84	85
30.68		110	73	1.0	84	104	76	0.98	84	91	80	0.90	85
28.76		118	72	1.1	84	111	73	1.0	84	97	78	0.94	85
25.38		133	62	1.0	84	126	69	1.1	84	110	74	1.0	85
22.50		151	50	0.96	83	142	58	1.0	84	124	71	1.1	85
19.13		177	37	0.85	81	167	42	0.90	82	146	58	1.1	84
19.89		170	69	1.4	91	160	70	1.3	91	140	72	1.2	91
18.24		186	67	1.4	91	175	68	1.4	91	153	70	1.2	91
15.53		218	57	1.4	91	206	59	1.4	91	180	68	1.4	91
13.39		253	53	1.6*	91	238	57	1.6*	91	209	60	1.4	91
12.48	24/5	272	53	1.7*	91	256	55	1.6*	91	224	58	1.5	91
10.91		311	44	1.6*	91	293	49	1.7*	91	256	58	1.7*	91
10.23		332	40	1.5	90	312	44	1.6*	91	273	54	1.7*	91
9.02		376	34	1.5	90	354	37	1.5	90	310	46	1.6*	91
8.00		425	26	1.3	89	400	32	1.5	90	350	39	1.6*	90
6.80		500	20	1.2	88	470	23	1.3	89	411	31	1.5	90
6.33		537	28	1.7*	90	505	31	1.8*	91	442	38	1.9*	91
5.38	19/5	631	22	1.6*	90	594	24	1.7*	90	520	31	1.9*	91
4.86		699	19	1.6*	89	658	21	1.6*	90	576	27	1.8*	91
3.97		856	14	1.4	88	806	16	1.5	89	705	20	1.6*	90

* P_{Mot_max} = 1.5 kW

S..37p

i_{tot}	i_s	n_e = 2200 min^{-1}				n_e = 1700 min^{-1}				n_e = 1400 min^{-1}			
		n_a min^{-1}	M_{amax} Nm	P_{Mot} kW	η %	n_a min^{-1}	M_{amax} Nm	P_{Mot} kW	η %	n_a min^{-1}	M_{amax} Nm	P_{Mot} kW	η %
157.43	38/1	13	94	0.20	67	10	94	0.16	66	8.8	94	0.14	64
144.40		15	95	0.22	68	11	95	0.18	67	9.6	95	0.15	65
122.94		17	96	0.26	69	13	96	0.21	68	11	96	0.17	67
106.00		20	97	0.30	69	16	97	0.24	69	13	97	0.20	68
98.80		22	97	0.32	70	17	97	0.25	69	14	97	0.21	68
86.36		25	92	0.35	70	19	98	0.29	70	16	98	0.24	69
80.96		27	90	0.37	70	20	99	0.31	70	17	99	0.26	70
71.44		30	85	0.39	70	23	95	0.34	70	19	100	0.29	70
63.33		34	81	0.42	70	26	91	0.36	71	22	98	0.32	71
53.83		40	76	0.46	70	31	85	0.40	71	26	92	0.35	71
55.93	27/2	39	104	0.51	84	30	104	0.40	83	25	104	0.33	82
51.30		42	104	0.55	84	33	104	0.43	84	27	104	0.36	83
43.68		50	103	0.64	85	38	105	0.51	84	32	105	0.42	84
37.66		58	97	0.70	85	45	105	0.59	85	37	105	0.49	84
35.10		62	94	0.73	85	48	105	0.63	85	39	105	0.52	84
30.68		71	89	0.79	85	55	99	0.68	85	45	105	0.59	85
28.76		76	87	0.82	85	59	97	0.71	85	48	105	0.63	85
25.38		86	82	0.88	85	66	92	0.76	85	55	100	0.68	85
22.50		97	78	0.94	85	75	87	0.81	85	62	95	0.73	85
19.13		115	73	1.0	85	88	82	0.89	85	73	89	0.80	86
19.89	24/5	110	74	0.94	91	85	77	0.76	91	70	78	0.64	90
18.24		120	73	1.0	91	93	76	0.82	91	76	78	0.69	90
15.53		141	72	1.2	91	109	74	0.93	91	90	76	0.79	91
13.39		164	70	1.3	91	126	74	1.1	91	104	75	0.90	91
12.48		176	68	1.4	91	136	72	1.1	91	112	74	0.95	91
10.91		201	63	1.5	91	155	70	1.2	91	128	73	1.1	91
10.23		215	59	1.5	91	166	67	1.3	91	136	73	1.1	91
9.02		243	55	1.5	91	188	64	1.4	92	155	70	1.2	92
8.00		275	50	1.6*	91	212	56	1.4	91	175	66	1.3	92
6.80		323	45	1.7*	91	250	52	1.5	91	205	60	1.4	92
6.33	19/5	347	44	1.7*	92	268	49	1.5	92	221	56	1.4	92
5.38		408	40	1.9*	92	315	47	1.7*	92	260	51	1.5	92
4.86		452	36	1.9*	92	349	43	1.7*	92	288	48	1.6*	92
3.97		554	31	2.0*	91	428	40	1.9*	92	352	44	1.8*	92

* P_{Mot_max} = 1.5 kW

S..37p

i_{tot}	i_s	n_e = 1100 min^{-1}				n_e = 900 min^{-1}				n_e = 700 min^{-1}			
		n_a min^{-1}	M_{amax} Nm	P_{Mot} kW	η %	n_a min^{-1}	M_{amax} Nm	P_{Mot} kW	η %	n_a min^{-1}	M_{amax} Nm	P_{Mot} kW	η %
157.43	38/1	6.9	94	0.11	62	5.7	95	0.09	60	4.4	95	0.08	58
144.40		7.6	95	0.12	63	6.2	96	0.10	61	4.8	96	0.08	59
122.94		8.9	96	0.14	65	7.3	97	0.12	63	5.6	97	0.10	61
106.00		10	97	0.16	66	8.4	98	0.13	65	6.6	98	0.11	62
98.80		11	97	0.17	67	9.1	98	0.14	65	7.0	98	0.12	63
86.36		12	98	0.19	68	10	99	0.16	67	8.1	99	0.13	65
80.96		13	99	0.21	68	11	99	0.17	67	8.6	99	0.14	65
71.44		15	100	0.23	69	12	100	0.19	68	9.7	100	0.15	67
63.33		17	100	0.26	70	14	101	0.22	69	11	101	0.17	68
53.83		20	101	0.30	71	16	102	0.25	70	13	102	0.20	69
55.93	27/2	19	104	0.26	81	16	104	0.22	80	12	104	0.17	78
51.30		21	104	0.29	82	17	104	0.24	81	13	104	0.19	79
43.68		25	105	0.34	83	20	105	0.28	82	16	105	0.22	80
37.66		29	105	0.39	83	23	105	0.32	82	18	105	0.25	81
35.10		31	105	0.41	84	25	105	0.34	83	19	105	0.27	82
30.68		35	105	0.47	84	29	105	0.39	84	22	105	0.30	82
28.76		38	105	0.50	84	31	105	0.41	84	24	105	0.32	83
25.38		43	105	0.56	85	35	105	0.46	84	27	105	0.36	83
22.50		48	105	0.63	85	40	105	0.52	85	31	105	0.41	84
19.13		57	98	0.69	86	47	105	0.61	85	36	105	0.47	85
19.89	24/5	55	80	0.52	90	45	81	0.43	89	35	81	0.34	88
18.24		60	80	0.56	90	49	81	0.47	89	38	82	0.37	88
15.53		70	78	0.64	90	57	80	0.54	90	45	81	0.43	89
13.39		82	78	0.74	91	67	78	0.61	90	52	80	0.49	90
12.48		88	76	0.77	91	72	78	0.65	90	56	80	0.52	90
10.91		100	75	0.87	91	82	78	0.74	91	64	79	0.59	90
10.23		107	75	0.93	91	87	76	0.77	91	68	78	0.62	90
9.02		121	73	1.0	91	99	75	0.86	91	77	77	0.69	91
8.00		137	72	1.1	92	112	74	0.95	91	87	77	0.78	91
6.80		161	70	1.3	92	132	72	1.1	92	102	75	0.88	91
6.33	19/5	173	65	1.3	92	142	68	1.1	92	110	69	0.87	92
5.38		204	63	1.5	92	167	66	1.3	92	130	68	1.0	92
4.86		226	61	1.6*	92	185	63	1.3	92	144	68	1.1	92
3.97		277	56	1.8*	93	226	58	1.5	93	176	61	1.2	92

* P_{Mot_max} = 1.5 kW

S..37p

i_{tot}	i_s	n_e = 500 min^{-1}				n_e = 250 min^{-1}				n_e = 10 min^{-1}			
		n_a min^{-1}	M_{amax} Nm	P_{Mot} kW	η %	n_a min^{-1}	M_{amax} Nm	P_{Mot} kW	η %	n_a min^{-1}	M_{amax} Nm	P_{Mot} kW	η %
157.43	38/1	3.1	97	0.06	54	1.5	98	<0.05	47	0.06	105	<0.05	48
144.40		3.4	97	0.06	55	1.7	98	<0.05	48	0.06	105	<0.05	48
122.94		4.0	98	0.07	57	2.0	99	<0.05	49	0.08	105	<0.05	48
106.00		4.7	99	0.08	59	2.3	100	<0.05	50	0.09	105	<0.05	48
98.80		5.0	100	0.09	60	2.5	100	0.05	51	0.10	105	<0.05	48
86.36		5.7	101	0.10	61	2.8	101	0.06	53	0.11	105	<0.05	49
80.96		6.1	101	0.11	62	3.0	101	0.06	54	0.12	105	<0.05	49
71.44		6.9	102	0.12	64	3.4	102	0.07	56	0.13	105	<0.05	49
63.33		7.8	102	0.13	65	3.9	102	0.07	57	0.15	105	<0.05	49
53.83		9.2	102	0.15	67	4.6	102	0.08	60	0.18	105	<0.05	49
55.93	27/2	8.9	104	0.13	75	4.4	104	0.07	68	0.17	105	<0.05	68
51.30		9.7	104	0.14	76	4.8	104	0.08	69	0.19	105	<0.05	68
43.68		11	105	0.16	77	5.7	105	0.09	71	0.22	105	<0.05	68
37.66		13	105	0.19	79	6.6	105	0.10	72	0.26	105	<0.05	69
35.10		14	105	0.20	79	7.1	105	0.11	73	0.28	105	<0.05	69
30.68		16	105	0.22	8	8.1	105	0.12	74	0.32	105	<0.05	69
28.76		17	105	0.24	81	8.6	105	0.13	75	0.34	105	<0.05	69
25.38		19	105	0.27	82	9.8	105	0.14	76	0.39	105	<0.05	69
22.50		22	105	0.30	83	11	105	0.16	78	0.44	105	<0.05	69
19.13		26	105	0.34	83	13	105	0.18	79	0.52	105	<0.05	69
19.89	24/5	25	81	0.25	86	12	82	0.13	81	0.50	83	<0.05	80
18.24		27	82	0.27	87	13	82	0.14	82	0.54	83	<0.05	80
15.53		32	82	0.32	88	16	83	0.17	83	0.64	83	<0.05	80
13.39		37	82	0.36	88	18	83	0.19	84	0.74	83	<0.05	80
12.48		40	81	0.38	89	20	83	0.21	85	0.80	83	<0.05	80
10.91		45	81	0.44	89	22	83	0.23	86	0.91	83	<0.05	80
10.23		48	81	0.46	90	24	83	0.25	86	0.97	83	<0.05	81
9.02		55	80	0.52	90	27	82	0.27	87	1.1	82	<0.05	81
8.00		62	79	0.57	90	31	82	0.31	88	1.2	82	<0.05	81
6.80		73	78	0.66	91	36	82	0.36	89	1.4	82	<0.05	81
6.33	19/5	78	69	0.63	91	39	69	0.32	89	1.5	69	<0.05	81
5.38		92	68	0.72	92	46	68	0.37	90	1.8	68	<0.05	81
4.86		102	68	0.80	92	51	68	0.41	90	2.0	68	<0.05	81
3.97		125	68	0.97	92	62	68	0.49	91	2.5	68	<0.05	81

Technical data S..47p

S..47p

i_{tot}	i_s	n_e = 3400 min^{-1}				n_e = 3200 min^{-1}				n_e = 2800 min^{-1}			
		n_a min^{-1}	M_{amax} Nm	P_{Mot} kW	η %	n_a min^{-1}	M_{amax} Nm	P_{Mot} kW	η %	n_a min^{-1}	M_{amax} Nm	P_{Mot} kW	η %
201.00	42/1	16	192	0.49	70	15	192	0.46	70	13	192	0.40	70
184.80		18	193	0.53	70	17	193	0.50	70	15	193	0.44	70
158.12		21	188	0.60	71	20	192	0.58	71	17	194	0.51	71
137.05		24	179	0.66	71	23	183	0.63	71	20	191	0.58	71
128.10		26	175	0.69	71	24	179	0.66	71	21	187	0.60	71
110.73		30	167	0.76	71	28	170	0.72	71	25	178	0.66	71
94.08		36	126	0.69	69	34	139	0.71	70	29	168	0.73	71
84.00		40	106	0.66	68	38	118	0.68	69	33	147	0.73	71
71.75		47	83	0.62	66	44	93	0.65	67	39	118	0.69	69

i_{tot}	i_s	n_e = 3400 min^{-1}				n_e = 3200 min^{-1}				n_e = 2800 min^{-1}			
		n_a min^{-1}	M_{amax} Nm	P_{Mot} kW	η %	n_a min^{-1}	M_{amax} Nm	P_{Mot} kW	η %	n_a min^{-1}	M_{amax} Nm	P_{Mot} kW	η %
67.20		50	79	0.64	66	47	85	0.64	67	41	108	0.68	69
56.61		60	60	0.60	63	56	69	0.63	65	49	90	0.69	68
69.39		48	179	1.1	85	46	183	1.0	85	40	191	0.95	85
63.80		53	174	1.1	85	50	177	1.1	85	43	186	1.0	85
54.59		62	165	1.3	85	58	168	1.2	85	51	176	1.1	85
47.32		71	157	1.4	85	67	160	1.3	85	59	168	1.2	85
44.22		76	154	1.5	85	72	157	1.4	85	63	164	1.3	85
38.23	29/2	88	131	1.4	85	83	142	1.5	85	73	156	1.4	85
32.48		104	103	1.3	84	98	114	1.4	84	86	139	1.5	85
29.00		117	87	1.3	83	110	96	1.3	84	96	121	1.4	85
24.77		137	68	1.2	82	129	76	1.2	82	113	96	1.4	84
23.20		146	61	1.2	81	137	69	1.2	82	120	88	1.3	84
19.54		174	45	1.0	79	163	53	1.1	80	143	69	1.3	82
20.33		167	117	2.2	91	157	127	2.3*	91	137	141	2.2	92
17.62		192	98	2.2	91	181	107	2.2	91	158	127	2.3*	92
16.47		206	90	2.1	91	194	98	2.2	91	170	118	2.3*	91
14.24		238	78	2.2	91	224	83	2.2	91	196	98	2.2	91
12.10	27/5	280	63	2.1	90	264	69	2.1	90	231	82	2.2	91
10.80		314	53	2.0	89	296	60	2.1	90	259	72	2.2	91
9.23		368	38	1.7	88	346	45	1.8	89	303	60	2.1	90
8.64		393	34	1.6	87	370	39	1.7	88	324	55	2.1	90
7.28		467	25	1.4	86	439	30	1.6	87	384	41	1.9	89
6.83		497	36	2.1	90	468	41	2.2	90	409	52	2.5*	91
6.40		531	33	2.1	89	500	37	2.2	90	437	47	2.4*	91
5.39	20/5	630	25	1.9	88	593	28	2.0	89	519	37	2.2	90
4.76		714	20	1.7	87	672	23	1.8	88	588	30	2.1	90
4.00		850	16	1.7	86	800	18	1.7	87	700	23	1.9	89

* P_{Mot_max} = 2.2 kW

S..47p

i_{tot}	i_s	n_e = 2200 min^{-1}				n_e = 1700 min^{-1}				n_e = 1400 min^{-1}			
		n_a min^{-1}	M_{amax} Nm	P_{Mot} kW	η %	n_a min^{-1}	M_{amax} Nm	P_{Mot} kW	η %	n_a min^{-1}	M_{amax} Nm	P_{Mot} kW	η %
201.00		10	192	0.32	69	8.4	192	0.25	67	6.9	192	0.21	66
184.80		11	193	0.35	69	9.1	193	0.27	68	7.5	193	0.23	67
158.12		13	194	0.40	70	10	194	0.32	69	8.8	194	0.27	68
137.05		16	195	0.46	71	12	195	0.36	70	10	195	0.30	69
128.10		17	196	0.50	71	13	196	0.39	70	10	196	0.32	69
110.73	42/1	19	193	0.56	71	15	197	0.45	71	12	197	0.37	70
94.08		23	182	0.62	72	18	198	0.52	72	14	198	0.43	71
84.00		26	176	0.67	72	20	191	0.56	72	16	199	0.49	72
71.75		30	167	0.75	72	23	181	0.62	72	19	194	0.55	72
67.20		32	156	0.75	72	25	178	0.65	72	20	189	0.57	72
56.61		38	126	0.72	71	30	168	0.73	73	24	179	0.64	73
69.39		31	200	0.78	85	24	200	0.61	84	20	200	0.51	83
63.80		34	200	0.85	85	26	200	0.66	84	21	200	0.55	84
54.59		40	191	0.95	85	31	200	0.77	85	25	200	0.64	84
47.32		46	182	1.0	85	35	198	0.88	85	29	200	0.73	85
44.22		49	178	1.1	85	38	193	0.91	85	31	200	0.78	85
38.23	29/2	57	169	1.2	85	44	184	1.0	85	36	196	0.88	85
32.48		67	160	1.3	86	52	174	1.1	86	43	186	0.98	86
29.00		75	154	1.4	86	58	167	1.2	86	48	179	1.1	86
24.77		88	139	1.5	85	68	159	1.3	86	56	169	1.2	86
23.20		94	129	1.5	85	73	155	1.4	86	60	165	1.2	86
19.54		112	103	1.4	85	87	146	1.5	86	71	156	1.4	86
20.33		108	149	1.8	92	83	155	1.5	91	68	160	1.3	91
17.62		124	145	2.1	92	96	152	1.7	92	79	156	1.4	91
16.47		133	142	2.2	92	103	149	1.8	92	85	155	1.5	91
14.24		154	134	2.4*	92	119	146	2.0	92	98	152	1.7	92
12.10	27/5	181	111	2.3*	92	140	138	2.2	92	115	146	1.9	92
10.80		203	96	2.2	91	157	133	2.4*	92	129	142	2.1	92
9.23		238	82	2.2	91	184	112	2.4*	92	151	134	2.3*	92
8.64		254	77	2.3*	91	196	104	2.3*	92	162	131	2.4*	92
7.28		302	64	2.2	91	233	86	2.3*	91	192	109	2.4*	92
6.83		322	76	2.8*	92	248	107	3.0*	93	204	120	2.8*	93
6.40		343	70	2.7*	92	265	99	3.0*	93	218	118	2.9*	93
5.39	20/5	408	56	2.6*	92	315	82	2.9*	93	259	104	3.0*	93
4.76		462	48	2.5*	91	357	71	2.9*	92	294	91	3.0*	93
4.00		550	37	2.3*	91	425	57	2.8*	92	350	75	3.0*	93

* P_{Mot_max} = 2.2 kW

S..47p

i_{tot}	i_s	n_e = 1100 min^{-1}				n_e = 900 min^{-1}				n_e = 700 min^{-1}			
		n_a	M_{amax}	P_{Mot}	η	n_a	M_{amax}	P_{Mot}	η	n_a	M_{amax}	P_{Mot}	η
		min^{-1}	Nm	kW	%	min^{-1}	Nm	kW	%	min^{-1}	Nm	kW	%
201.00	42/1	5.4	192	0.17	64	4.4	192	0.15	62	3.4	192	0.12	59
184.80		5.9	193	0.19	65	4.8	193	0.16	63	3.7	193	0.13	60
158.12		6.9	194	0.21	66	5.6	194	0.18	64	4.4	194	0.15	62
137.05		8.0	195	0.24	67	6.5	195	0.20	66	5.1	195	0.16	63
128.10		8.5	196	0.26	68	7.0	196	0.22	66	5.4	196	0.17	64
110.73		9.9	197	0.30	69	8.1	197	0.25	68	6.3	197	0.20	66
94.08		11	198	0.35	70	9.5	198	0.29	69	7.4	198	0.23	67
84.00		13	199	0.39	71	10	199	0.32	70	8.3	199	0.25	68
71.75		15	200	0.45	72	12	200	0.37	71	9.7	200	0.29	70
67.20		16	200	0.48	72	13	200	0.39	71	10	200	0.31	70
56.61		19	194	0.54	73	15	200	0.46	72	12	200	0.36	71
69.39	29/2	15	200	0.41	82	12	200	0.34	81	10	200	0.27	79
63.80		17	200	0.44	82	14	200	0.36	81	10	200	0.29	80
54.59		20	200	0.51	83	16	200	0.42	82	12	200	0.33	81
47.32		23	200	0.58	84	19	200	0.48	83	14	200	0.38	82
44.22		24	200	0.62	84	20	200	0.51	83	15	200	0.40	82
38.23		28	200	0.71	85	23	200	0.59	84	18	200	0.46	83
32.48		33	200	0.83	85	27	200	0.69	85	21	200	0.54	84
29.00		37	193	0.90	86	31	200	0.76	85	24	200	0.60	84
24.77		44	183	0.99	86	36	196	0.87	86	28	200	0.70	85
23.20		47	179	1.0	86	38	191	0.91	86	30	200	0.74	85
19.54		56	169	1.2	86	46	180	1.0	86	35	196	0.86	86
20.33	27/5	54	163	1.0	91	44	166	0.85	90	34	169	0.68	89
17.62		62	161	1.2	91	51	164	0.97	91	39	167	0.77	90
16.47		66	159	1.2	91	54	164	1.0	91	42	167	0.82	90
14.24		77	156	1.4	91	63	161	1.2	91	49	164	0.93	91
12.10		90	153	1.6	92	74	158	1.3	91	57	162	1.1	91
10.80		101	151	1.8	92	83	155	1.5	92	64	161	1.2	91
9.23		119	145	2.0	92	97	152	1.7	92	75	158	1.4	92
8.64		127	141	2.0	92	104	149	1.8	92	81	156	1.4	92
7.28		151	132	2.3*	92	123	142	2.0	92	96	152	1.7	92
6.83	20/5	161	128	2.3*	93	131	133	2.0	93	102	139	1.6	93
6.40		171	125	2.4*	93	140	132	2.1	93	109	138	1.7	93
5.39		204	120	2.8*	93	166	126	2.4*	93	129	133	1.9	93
4.76		231	114	3.0*	93	189	122	2.6*	93	147	130	2.2	93
4.00		275	101	3.1*	93	225	113	2.9*	93	175	123	2.4*	93

* P_{Mot_max} = 2.2 kW

S..47p

i_{tot}	i_s	n_e = 500 min^{-1}				n_e = 250 min^{-1}				n_e = 10 min^{-1}			
		n_a	M_{amax}	P_{Mot}	η	n_a	M_{amax}	P_{Mot}	η	n_a	M_{amax}	P_{Mot}	η
		min^{-1}	Nm	kW	%	min^{-1}	Nm	kW	%	min^{-1}	Nm	kW	%
201.00		2.4	192	0.09	54	1.2	193	0.05	48	0.04	200	<0.05	48
184.80		2.7	193	0.10	56	1.3	193	0.06	48	0.05	200	<0.05	48
158.12		3.1	194	0.11	58	1.5	194	0.07	49	0.06	200	<0.05	49
137.05		3.6	195	0.12	60	1.8	195	0.07	51	0.07	200	<0.05	49
128.10		3.9	196	0.13	61	1.9	196	0.08	52	0.07	200	<0.05	49
110.73	42/1	4.5	197	0.15	62	2.2	197	0.09	54	0.09	200	<0.05	49
94.08		5.3	198	0.17	64	2.6	198	0.10	56	0.10	200	<0.05	49
84.00		5.9	199	0.19	66	2.9	199	0.11	58	0.11	200	<0.05	49
71.75		6.9	200	0.22	67	3.4	200	0.12	60	0.13	200	<0.05	50
67.20		7.4	200	0.23	68	3.7	200	0.13	61	0.14	200	<0.05	50
56.61		8.8	200	0.27	69	4.4	200	0.15	63	0.17	200	<0.05	50
69.39		7.2	200	0.20	76	3.6	200	0.11	69	0.14	200	<0.05	68
63.80		7.8	200	0.21	77	3.9	200	0.12	70	0.15	200	<0.05	69
54.59		9.1	200	0.25	78	4.5	200	0.13	72	0.18	200	<0.05	69
47.32		10	200	0.28	79	5.2	200	0.15	73	0.21	200	<0.05	69
44.22		11	200	0.30	80	5.6	200	0.16	74	0.22	200	<0.05	69
38.23	29/2	13	200	0.34	81	6.5	200	0.18	75	0.26	200	<0.05	69
32.48		15	200	0.39	82	7.6	200	0.21	77	0.30	200	<0.05	69
29.00		17	200	0.44	83	8.6	200	0.23	78	0.34	200	<0.05	69
24.77		20	200	0.50	84	10	200	0.27	79	0.40	200	<0.05	69
23.20		21	200	0.54	84	10	200	0.28	80	0.43	200	<0.05	69
19.54		25	200	0.63	85	12	200	0.33	81	0.51	200	<0.05	69
20.33		24	171	0.50	88	12	174	0.27	84	0.49	174	<0.05	81
17.62		28	171	0.57	89	14	174	0.31	85	0.56	174	<0.05	81
16.47		30	171	0.61	89	15	174	0.33	85	0.60	174	<0.05	81
14.24		35	169	0.69	90	17	174	0.37	86	0.70	174	<0.05	81
12.10	27/5	41	167	0.80	90	20	173	0.43	87	0.82	174	<0.05	81
10.80		46	166	0.89	91	23	173	0.48	88	0.92	174	<0.05	81
9.23		54	164	1.0	91	27	172	0.55	89	1.00	174	<0.05	81
8.64		57	162	1.1	91	28	171	0.58	89	1.1	174	<0.05	81
7.28		68	159	1.2	92	34	170	0.68	90	1.3	174	<0.05	81
6.83		73	145	1.2	92	36	155	0.66	91	1.4	165	<0.05	83
6.40		78	145	1.3	92	39	153	0.69	91	1.5	165	<0.05	83
5.39	20/5	92	142	1.5	93	46	152	0.81	91	1.8	164	<0.05	83
4.76		105	139	1.6	93	52	151	0.91	92	2.1	164	<0.05	83
4.00		125	134	1.9	93	62	149	1.1	92	2.5	164	0.05	83

Technical data S..57p

S..57p

i_{tot}	i_s	n_e = 3400 min^{-1}				n_e = 3200 min^{-1}				n_e = 2800 min^{-1}			
		n_a min^{-1}	M_{amax} Nm	P_{Mot} kW	η %	n_a min^{-1}	M_{amax} Nm	P_{Mot} kW	η %	n_a min^{-1}	M_{amax} Nm	P_{Mot} kW	η %
201.00	42/1	16	335	0.81	74	15	345	0.78	73	13	355	0.71	73
184.80		18	325	0.85	74	17	335	0.82	74	15	350	0.75	74
158.12		21	310	0.94	74	20	315	0.90	74	17	330	0.83	74
137.05		24	295	1.0	74	23	300	0.99	74	20	315	0.91	74
128.10		26	290	1.1	74	24	295	1.0	74	21	310	0.95	74
110.73		30	265	1.1	74	28	280	1.1	74	25	295	1.0	75
94.08		36	215	1.1	73	34	235	1.1	74	29	275	1.2	75
84.00		40	188	1.1	73	38	205	1.1	73	33	245	1.2	74
71.75		47	143	1.00	71	44	157	1.0	72	39	200	1.1	74
67.20		50	131	0.98	71	47	145	1.0	72	41	187	1.1	73
56.61		60	103	0.93	69	56	115	0.97	70	49	142	1.0	72
69.39	29/2	48	290	1.7	86	46	300	1.7	86	40	310	1.5	86
63.80		53	285	1.8	87	50	290	1.8	87	43	305	1.6	87
54.59		62	270	2.0	87	58	275	1.9	87	51	285	1.8	87
47.32		71	255	2.2	87	67	260	2.1	87	59	275	2.0	87
44.22		76	235	2.2	87	72	255	2.2	87	63	265	2.0	87
38.23		88	200	2.2	86	83	215	2.2	87	73	255	2.3	87
32.48		104	164	2.1	86	98	178	2.1	86	86	210	2.2	87
29.00		117	131	1.9	85	110	154	2.1	86	96	186	2.2	86
24.77		137	111	1.9	85	129	120	1.9	85	113	153	2.1	86
23.20		146	102	1.9	84	137	111	1.9	85	120	131	1.9	85
19.54		174	81	1.8	83	163	90	1.8	84	143	109	1.9	85
20.33	27/5	167	171	3.3*	92	157	184	3.3*	92	137	225	3.5*	92
17.62		192	144	3.2*	92	181	155	3.2*	92	158	183	3.3*	92
16.47		206	134	3.2*	92	194	143	3.2*	92	170	169	3.3*	92
14.24		238	116	3.2*	91	224	123	3.2*	92	196	143	3.2*	92
12.10		280	99	3.2*	91	264	105	3.2*	91	231	121	3.2*	92
10.80		314	88	3.2*	91	296	94	3.2*	91	259	108	3.2*	91
9.23		368	73	3.1*	91	346	79	3.2*	91	303	93	3.2*	91
8.64		393	68	3.1*	90	370	74	3.2*	91	324	87	3.2*	91
7.28		467	54	2.9	90	439	60	3.1*	90	384	72	3.2*	91
6.83	20/5	497	59	3.4*	91	468	66	3.5*	92	409	80	3.7*	92
6.40		531	54	3.3*	91	500	60	3.4*	91	437	74	3.7*	92
5.39		630	42	3.1*	90	593	47	3.2*	91	519	59	3.5*	92
4.76		714	35	2.9	90	672	40	3.1*	91	588	50	3.4*	91
4.00		850	28	2.8	89	800	31	2.9	90	700	40	3.2*	91

* P_{Mot_max} = 3.0 kW

S..57p

i_{tot}	i_s	n_e = 2200 min^{-1}				n_e = 1700 min^{-1}				n_e = 1400 min^{-1}			
		n_a	M_{amax}	P_{Mot}	η	n_a	M_{amax}	P_{Mot}	η	n_a	M_{amax}	P_{Mot}	η
		min^{-1}	Nm	kW	%	min^{-1}	Nm	kW	%	min^{-1}	Nm	kW	%
201.00	42/1	10	355	0.56	72	8.4	355	0.44	71	6.9	355	0.37	69
184.80		11	355	0.61	73	9.1	355	0.48	72	7.5	355	0.40	70
158.12		13	360	0.71	74	10	360	0.56	73	8.8	360	0.46	72
137.05		16	340	0.77	74	12	360	0.64	74	10	360	0.53	73
128.10		17	335	0.81	74	13	365	0.69	74	10	365	0.57	73
110.73		19	320	0.89	75	15	345	0.75	74	12	365	0.65	74
94.08		23	300	0.98	75	18	330	0.84	75	14	350	0.73	74
84.00		26	290	1.1	75	20	315	0.89	75	16	335	0.78	75
71.75		30	275	1.2	75	23	300	0.99	75	19	320	0.87	75
67.20		32	255	1.2	75	25	290	1.0	75	20	310	0.90	75
56.61		38	210	1.1	74	30	275	1.1	75	24	295	1.0	76
69.39	29/2	31	335	1.3	86	24	365	1.1	86	20	370	0.92	85
63.80		34	330	1.4	86	26	355	1.2	86	21	370	1.00	85
54.59		40	310	1.5	87	31	340	1.3	86	25	360	1.1	86
47.32		46	295	1.7	87	35	325	1.4	87	29	345	1.2	86
44.22		49	290	1.7	87	38	315	1.5	87	31	335	1.3	87
38.23		57	275	1.9	87	44	300	1.6	87	36	320	1.4	87
32.48		67	260	2.1	87	52	285	1.8	87	43	300	1.6	87
29.00		75	250	2.3	87	58	270	1.9	87	48	290	1.7	87
24.77		88	210	2.3	87	68	255	2.1	87	56	275	1.9	87
23.20		94	195	2.2	87	73	250	2.2	87	60	270	2.0	87
19.54		112	160	2.2	86	87	220	2.3	87	71	250	2.1	87
20.33	27/5	108	225	2.8	92	83	225	2.1	92	68	225	1.8	92
17.62		124	225	3.2*	92	96	225	2.5	92	79	225	2.0	92
16.47		133	225	3.4*	92	103	225	2.6	92	85	225	2.2	92
14.24		154	190	3.3*	92	119	225	3.0	92	98	225	2.5	92
12.10		181	159	3.3*	92	140	220	3.5*	92	115	225	3.0	92
10.80		203	139	3.2*	92	157	191	3.4*	92	129	225	3.3*	92
9.23		238	119	3.2*	92	184	159	3.3*	92	151	199	3.4*	92
8.64		254	112	3.3*	92	196	148	3.3*	92	162	187	3.4*	92
7.28		302	96	3.3*	92	233	123	3.3*	92	192	155	3.4*	92
6.83	20/5	322	112	4.1*	93	248	152	4.3*	93	204	162	3.7*	93
6.40		343	103	4.0*	93	265	141	4.2*	93	218	156	3.8*	93
5.39		408	84	3.9*	92	315	118	4.2*	93	259	147	4.3*	93
4.76		462	72	3.8*	92	357	103	4.2*	93	294	129	4.3*	93
4.00		550	58	3.6*	92	425	84	4.0*	93	350	108	4.3*	93

* P_{Mot_max} = 3.0 kW

S..57p

i_{tot}	i_s	n_e = 1100 min^{-1}				n_e = 900 min^{-1}				n_e = 700 min^{-1}			
		n_a min^{-1}	M_{amax} Nm	P_{Mot} kW	η %	n_a min^{-1}	M_{amax} Nm	P_{Mot} kW	η %	n_a min^{-1}	M_{amax} Nm	P_{Mot} kW	η %
201.00	42/1	5.4	355	0.30	67	4.4	355	0.25	65	3.4	360	0.21	63
184.80		5.9	360	0.33	68	4.8	360	0.28	67	3.7	360	0.22	64
158.12		6.9	360	0.37	70	5.6	360	0.31	68	4.4	360	0.25	66
137.05		8.0	365	0.43	71	6.5	365	0.36	70	5.1	365	0.29	68
128.10		8.5	365	0.46	72	7.0	365	0.38	70	5.4	365	0.31	68
110.73		9.9	365	0.52	73	8.1	365	0.43	72	6.3	365	0.35	70
94.08		11	370	0.61	74	9.5	370	0.51	73	7.4	370	0.41	71
84.00		13	365	0.67	74	10	370	0.57	73	8.3	370	0.45	72
71.75		15	345	0.74	75	12	370	0.65	74	9.7	370	0.52	73
67.20		16	340	0.78	75	13	360	0.68	75	10	370	0.55	74
56.61		19	320	0.86	75	15	340	0.75	75	12	370	0.64	74
69.39	29/2	15	370	0.73	84	12	370	0.61	83	10	370	0.48	81
63.80		17	370	0.79	84	14	370	0.66	83	10	370	0.52	82
54.59		20	370	0.92	85	16	370	0.76	84	12	370	0.60	83
47.32		23	370	1.0	86	19	370	0.87	85	14	370	0.68	84
44.22		24	365	1.1	86	20	370	0.92	85	15	370	0.73	84
38.23		28	345	1.2	86	23	370	1.1	86	18	370	0.83	85
32.48		33	325	1.3	87	27	350	1.2	86	21	370	0.97	86
29.00		37	315	1.4	87	31	335	1.3	87	24	365	1.1	86
24.77		44	295	1.6	87	36	320	1.4	87	28	345	1.2	87
23.20		47	290	1.7	87	38	310	1.4	87	30	340	1.2	87
19.54		56	275	1.9	87	46	290	1.6	87	35	315	1.4	87
20.33	27/5	54	225	1.4	91	44	225	1.1	91	34	225	0.90	90
17.62		62	225	1.6	92	51	225	1.3	91	39	225	1.0	91
16.47		66	225	1.7	92	54	225	1.4	91	42	225	1.1	91
14.24		77	225	2.0	92	63	225	1.6	92	49	225	1.3	91
12.10		90	225	2.3	92	74	225	1.9	92	57	225	1.5	92
10.80		101	225	2.6	92	83	225	2.1	92	64	225	1.7	92
9.23		119	215	2.9	92	97	225	2.5	92	75	225	1.9	92
8.64		127	205	3.0	92	104	215	2.5	92	81	225	2.1	92
7.28		151	185	3.2*	92	123	210	2.9	92	96	215	2.3	92
6.83	20/5	161	170	3.1*	93	131	195	2.9	93	102	205	2.4	93
6.40		171	165	3.2*	93	140	185	2.9	93	109	190	2.3	93
5.39		204	155	3.6*	93	166	175	3.3*	93	129	180	2.6	93
4.76		231	145	3.8*	93	189	160	3.4*	93	147	170	2.8	93
4.00		275	130	4.0*	93	225	150	3.8*	93	175	160	3.1*	93

* P_{Mot_max} = 3.0 kW

S..57p

i_{tot}	i_s	n_e = 500 min^{-1}				n_e = 250 min^{-1}				n_e = 10 min^{-1}			
		n_a	M_{amax}	P_{Mot}	η	n_a	M_{amax}	P_{Mot}	η	n_a	M_{amax}	P_{Mot}	η
		min^{-1}	Nm	kW	%	min^{-1}	Nm	kW	%	min^{-1}	Nm	kW	%
201.00		2.4	360	0.16	58	1.2	360	0.09	50	0.04	370	<0.05	50
184.80		2.7	360	0.17	60	1.3	360	0.10	51	0.05	370	<0.05	50
158.12		3.1	360	0.19	62	1.5	360	0.11	53	0.06	370	<0.05	50
137.05		3.6	365	0.22	64	1.8	365	0.13	55	0.07	370	<0.05	50
128.10		3.9	365	0.23	65	1.9	365	0.13	56	0.07	370	<0.05	50
110.73	42/1	4.5	365	0.26	67	2.2	365	0.15	58	0.09	370	<0.05	50
94.08		5.3	370	0.30	68	2.6	370	0.17	60	0.10	370	<0.05	50
84.00		5.9	370	0.33	70	2.9	370	0.19	62	0.11	370	<0.05	51
71.75		6.9	370	0.38	71	3.4	370	0.21	64	0.13	370	<0.05	51
67.20		7.4	370	0.40	71	3.7	370	0.22	65	0.14	370	<0.05	51
56.61		8.8	370	0.47	73	4.4	370	0.26	67	0.17	370	<0.05	51
69.39		7.2	370	0.36	78	3.6	370	0.20	71	0.14	370	<0.05	69
63.80		7.8	370	0.38	79	3.9	370	0.21	72	0.15	370	<0.05	69
54.59		9.1	370	0.44	81	4.5	370	0.24	74	0.18	370	<0.05	69
47.32		10	370	0.50	82	5.2	370	0.27	76	0.21	370	<0.05	69
44.22		11	370	0.53	82	5.6	370	0.29	77	0.22	370	<0.05	69
38.23	29/2	13	370	0.61	83	6.5	370	0.32	78	0.26	370	<0.05	70
32.48		15	370	0.71	84	7.6	370	0.38	80	0.30	370	<0.05	70
29.00		17	370	0.79	85	8.6	370	0.41	81	0.34	370	<0.05	70
24.77		20	370	0.91	86	10	370	0.48	82	0.40	370	<0.05	70
23.20		21	370	0.97	86	10	370	0.51	82	0.43	370	<0.05	70
19.54		25	355	1.1	86	12	370	0.59	84	0.51	370	<0.05	70
20.33		24	225	0.65	89	12	225	0.34	85	0.49	225	<0.05	80
17.62		28	225	0.75	90	14	225	0.39	86	0.56	225	<0.05	80
16.47		30	225	0.80	90	15	225	0.41	86	0.60	225	<0.05	80
14.24		35	225	0.92	90	17	225	0.47	87	0.70	225	<0.05	80
12.10	27/5	41	225	1.1	91	20	225	0.55	88	0.82	225	<0.05	80
10.80		46	225	1.2	91	23	225	0.61	89	0.92	225	<0.05	80
9.23		54	225	1.4	92	27	225	0.71	90	1.0	225	<0.05	80
8.64		57	225	1.5	92	28	225	0.76	90	1.1	225	<0.05	80
7.28		68	225	1.8	92	34	225	0.89	90	1.3	225	<0.05	80
6.83		73	200	1.7	93	36	200	0.84	91	1.4	200	<0.05	82
6.40		78	200	1.8	93	39	200	0.90	91	1.5	200	<0.05	82
5.39	20/5	92	205	2.1	93	46	205	1.1	92	1.8	205	<0.05	82
4.76		105	205	2.4	93	52	205	1.2	92	2.1	205	0.05	82
4.00		125	194	2.7	93	62	194	1.4	93	2.5	194	0.06	82

Technical data S..67p

S..67p

i_{tot}	i_s	n_e = 3400 min^{-1}				n_e = 3200 min^{-1}				n_e = 2800 min^{-1}			
		n_a	M_{amax}	P_{Mot}	η	n_a	M_{amax}	P_{Mot}	η	n_a	M_{amax}	P_{Mot}	η
		min^{-1}	Nm	kW	%	min^{-1}	Nm	kW	%	min^{-1}	Nm	kW	%
217.41		15	635	1.4	74	14	635	1.3	74	12	640	1.2	74
190.11		17	640	1.6	75	16	640	1.5	75	14	640	1.3	74
180.60		18	640	1.7	75	17	640	1.6	75	15	640	1.4	74
158.45	42/1	21	640	1.9	75	20	645	1.8	75	17	645	1.6	75
134.40		25	525	1.9	74	23	610	2.0	75	20	645	1.9	75
121.33		28	460	1.8	74	26	505	1.9	74	23	635	2.0	75
106.75		31	405	1.9	73	29	430	1.8	73	26	515	1.9	74

i_{tot}	i_s	n_e = 3400 min^{-1}				n_e = 3200 min^{-1}				n_e = 2800 min^{-1}			
		n_a min^{-1}	M_{amax} Nm	P_{Mot} kW	η %	n_a min^{-1}	M_{amax} Nm	P_{Mot} kW	η %	n_a min^{-1}	M_{amax} Nm	P_{Mot} kW	η %
100.80		33	380	1.9	72	31	410	1.9	73	27	475	1.9	74
85.83		39	320	1.9	72	37	345	1.9	72	32	400	1.9	73
78.00		43	285	1.8	71	41	310	1.9	72	35	365	1.9	73
67.57		50	235	1.8	69	47	260	1.8	70	41	315	1.9	72
58.80		57	184	1.7	67	54	215	1.8	69	47	270	1.9	71
75.06		45	625	3.4	87	42	635	3.3	87	37	660	3.0	87
65.63		51	580	3.6	87	48	620	3.6	87	42	635	3.3	87
62.35		54	540	3.6	87	51	585	3.6	87	44	630	3.4	87
54.70		62	465	3.5	87	58	505	3.6	87	51	595	3.7	87
46.40		73	415	3.7	86	68	415	3.5	86	60	490	3.6	87
41.89		81	365	3.6	86	76	395	3.7	86	66	435	3.5	87
36.85	29/2	92	310	3.5	85	86	335	3.6	86	75	405	3.7	86
34.80		97	295	3.5	85	91	315	3.5	86	80	380	3.7	86
29.63		114	250	3.6	85	107	270	3.6	85	94	310	3.6	86
26.93		126	220	3.5	84	118	240	3.5	85	103	280	3.6	85
23.33		145	182	3.3	83	137	200	3.4	84	120	245	3.6	85
20.30		167	141	3.0	82	157	164	3.3	83	137	205	3.5	84
24.44		139	365	5.8*	92	130	370	5.5	92	114	385	5.0	92
23.22		146	360	6.0*	92	137	365	5.7*	92	120	380	5.2	92
20.37		166	345	6.5*	92	157	350	6.2*	92	137	365	5.7*	92
17.28		196	275	6.2*	92	185	300	6.3*	92	162	350	6.4*	92
15.60		217	245	6.1*	92	205	265	6.2*	92	179	320	6.5*	92
13.73	27/5	247	215	6.1*	91	233	230	6.1*	92	203	270	6.3*	92
12.96		262	200	6.0*	91	246	215	6.1*	91	216	250	6.2*	92
11.03		308	169	6.0*	91	290	183	6.1*	91	253	215	6.2*	92
10.03		338	151	5.9*	91	319	164	6.0*	91	279	194	6.2*	91
8.69		391	124	5.7*	90	368	137	5.9*	90	322	166	6.2*	91
7.56		449	95	5.0*	89	423	112	5.5*	90	370	141	6.0*	91

* P_{Mot_max} = 5.5 kW

S..67p

i_{tot}	i_s	n_e = 2200 min^{-1}				n_e = 1700 min^{-1}				n_e = 1400 min^{-1}			
		n_a min^{-1}	M_{amax} Nm	P_{Mot} kW	η %	n_a min^{-1}	M_{amax} Nm	P_{Mot} kW	η %	n_a min^{-1}	M_{amax} Nm	P_{Mot} kW	η %
217.41	42/1	10	640	0.92	73	7.8	640	0.72	73	6.4	640	0.60	72
190.11		11	640	1.0	74	8.9	640	0.82	73	7.3	640	0.68	72
180.60		12	640	1.1	74	9.4	645	0.87	73	7.7	645	0.72	73
158.45		13	645	1.3	75	10	645	0.98	74	8.8	645	0.81	73
134.40		16	645	1.5	75	12	645	1.1	75	10	645	0.95	74
121.33		18	645	1.6	75	14	645	1.3	75	11	645	1.0	74
106.75		20	645	1.8	75	15	645	1.4	75	13	645	1.2	75
100.80		21	645	2.0	76	16	645	1.5	75	13	645	1.3	75
85.83		25	550	2.0	75	19	660	1.8	76	16	660	1.5	76
78.00		28	485	1.9	75	21	645	1.9	76	17	660	1.6	76
67.57		32	410	1.9	74	25	580	2.0	76	20	650	1.9	76
58.80		37	360	1.9	74	28	495	2.0	76	23	625	2.0	76
75.06	29/2	29	685	2.4	87	22	720	2.0	87	18	720	1.6	86
65.63		33	670	2.7	87	25	700	2.2	87	21	720	1.9	87
62.35		35	665	2.8	87	27	700	2.3	87	22	720	2.0	87
54.70		40	645	3.1	87	31	680	2.5	87	25	705	2.2	87
46.40		47	620	3.5	87	36	660	2.9	87	30	680	2.5	87
41.89		52	585	3.7	87	40	645	3.1	87	33	670	2.7	87
36.85		59	505	3.6	87	46	625	3.5	88	37	655	3.0	87
34.80		63	470	3.6	87	48	610	3.6	88	40	640	3.1	88
29.63		74	435	3.9	87	57	545	3.7	88	47	620	3.5	88
26.93		81	385	3.8	87	63	485	3.7	87	51	600	3.7	88
23.33		94	320	3.7	86	72	455	4.0	87	60	525	3.8	88
20.30		108	280	3.7	86	83	390	3.9	87	68	450	3.7	87
24.44	27/5	90	410	4.2	92	69	415	3.3	92	57	415	2.7	92
23.22		94	405	4.4	92	73	420	3.5	92	60	420	2.9	92
20.37		108	390	4.8	92	83	415	3.9	92	68	435	3.4	92
17.28		127	375	5.4	92	98	400	4.5	92	81	415	3.8	92
15.60		141	360	5.8*	92	108	390	4.8	93	89	410	4.2	93
13.73		160	350	6.4*	92	123	380	5.3	93	101	395	4.6	93
12.96		169	340	6.5*	92	131	375	5.6*	93	108	390	4.8	93
11.03		199	285	6.5*	92	154	355	6.2*	93	126	375	5.4	93
10.03		219	255	6.4*	92	169	340	6.5*	93	139	365	5.8*	93
8.69		253	220	6.4*	92	195	300	6.6*	93	161	350	6.4*	93
7.56		291	192	6.4*	92	224	260	6.6*	92	185	330	6.9*	93

* P_{Mot_max} = 5.5 kW

S..67p

i_{tot}	i_s	n_e = 1100 min^{-1}				n_e = 900 min^{-1}				n_e = 700 min^{-1}			
		n_a min^{-1}	M_{amax} Nm	P_{Mot} kW	η %	n_a min^{-1}	M_{amax} Nm	P_{Mot} kW	η %	n_a min^{-1}	M_{amax} Nm	P_{Mot} kW	η %
217.41	42/1	5.0	640	0.49	70	4.1	640	0.41	68	3.2	645	0.33	66
190.11		5.7	645	0.55	71	4.7	645	0.46	70	3.6	645	0.37	67
180.60		6.0	645	0.58	71	4.9	645	0.48	70	3.8	645	0.39	68
158.45		6.9	645	0.65	72	5.6	645	0.54	71	4.4	645	0.43	69
134.40		8.1	645	0.76	73	6.6	645	0.63	72	5.2	645	0.50	71
121.33		9.0	645	0.83	74	7.4	645	0.69	73	5.7	645	0.55	71
106.75		10	645	0.94	74	8.4	645	0.77	74	6.5	645	0.61	72
100.80		10	645	0.99	74	8.9	645	0.82	74	6.9	645	0.65	73
85.83		12	660	1.2	75	10	660	0.97	75	8.1	660	0.76	74
78.00		14	665	1.3	76	11	665	1.1	75	8.9	665	0.84	74
67.57		16	665	1.5	76	13	665	1.2	76	10	665	0.96	75
58.80		18	655	1.7	76	15	655	1.4	76	11	655	1.1	76
75.06	29/2	14	720	1.3	85	11	720	1.1	84	9.3	720	0.85	83
65.63		16	720	1.5	86	13	720	1.2	85	10	720	0.96	84
62.35		17	720	1.5	86	14	720	1.3	85	11	720	1.0	84
54.70		20	720	1.8	86	16	720	1.4	86	12	720	1.1	85
46.40		23	715	2.0	87	19	720	1.7	86	15	720	1.3	86
41.89		26	700	2.2	87	21	700	1.8	87	16	700	1.4	86
36.85		29	670	2.4	87	24	670	2.0	87	18	670	1.5	86
34.80		31	640	2.4	87	25	640	2.0	87	20	640	1.6	86
29.63		37	620	2.8	88	30	620	2.3	87	23	620	1.8	87
26.93		40	600	2.9	88	33	600	2.4	87	25	600	1.9	87
23.33		47	580	3.3	88	38	580	2.7	88	30	580	2.1	87
20.30		54	550	3.6	88	44	550	2.9	88	34	550	2.3	88
24.44	27/5	45	415	2.1	92	36	415	1.8	91	28	415	1.4	91
23.22		47	420	2.3	92	38	420	1.9	92	30	420	1.5	91
20.37		54	450	2.8	92	44	455	2.3	92	34	455	1.8	91
17.28		63	435	3.1	92	52	450	2.7	92	40	455	2.1	92
15.60		70	430	3.4	92	57	440	2.9	92	44	455	2.3	92
13.73		80	420	3.8	93	65	435	3.2	92	50	455	2.6	92
12.96		84	415	4.0	93	69	430	3.4	92	54	450	2.8	92
11.03		99	400	4.5	93	81	415	3.8	93	63	435	3.1	92
10.03		109	390	4.8	93	89	410	4.2	93	69	430	3.4	93
8.69		126	375	5.4	93	103	400	4.7	93	80	420	3.8	93
7.56		145	360	5.9*	93	119	385	5.2	93	92	410	4.3	93

* P_{Mot_max} = 5.5 kW

S..67p

i_{tot}	i_s	n_e = 500 min^{-1}				n_e = 250 min^{-1}				n_e = 10 min^{-1}			
		n_a	M_{amax}	P_{Mot}	η	n_a	M_{amax}	P_{Mot}	η	n_a	M_{amax}	P_{Mot}	η
		min^{-1}	Nm	kW	%	min^{-1}	Nm	kW	%	min^{-1}	Nm	kW	%
217.41	42/1	2.2	645	0.25	62	1.1	645	0.15	54	0.04	645	<0.05	52
190.11		2.6	645	0.28	64	1.3	645	0.16	55	0.05	645	<0.05	52
180.60		2.7	645	0.29	64	1.3	645	0.17	56	0.05	645	<0.05	52
158.45		3.1	645	0.32	66	1.5	645	0.19	58	0.06	645	<0.05	52
134.40		3.7	645	0.37	68	1.8	645	0.21	60	0.07	645	<0.05	52
121.33		4.1	645	0.41	69	2.0	645	0.23	61	0.08	645	<0.05	52
106.75		4.6	645	0.45	70	2.3	645	0.25	63	0.09	645	<0.05	52
100.80		4.9	645	0.48	70	2.4	645	0.26	63	0.09	645	<0.05	52
85.83		5.8	660	0.56	72	2.9	660	0.31	66	0.11	695	<0.05	53
78.00		6.4	665	0.61	73	3.2	665	0.33	67	0.12	685	<0.05	53
67.57		7.3	665	0.70	74	3.6	665	0.38	68	0.14	675	<0.05	53
58.80		8.5	655	0.78	74	4.2	655	0.42	70	0.17	655	<0.05	53
75.06	29/2	6.6	720	0.62	81	3.3	720	0.34	75	0.13	720	<0.05	71
65.63		7.6	720	0.70	82	3.8	720	0.38	76	0.15	720	<0.05	71
62.35		8.0	720	0.74	82	4.0	720	0.40	76	0.16	720	<0.05	71
54.70		9.1	720	0.83	83	4.5	720	0.44	78	0.18	720	<0.05	71
46.40		10	720	0.97	84	5.3	720	0.51	79	0.21	720	<0.05	71
41.89		11	720	1.1	85	5.9	720	0.56	80	0.23	720	<0.05	71
36.85		13	720	1.2	85	6.7	720	0.63	81	0.27	720	<0.05	71
34.80		14	700	1.2	86	7.1	700	0.65	82	0.28	700	<0.05	71
29.63		16	680	1.4	86	8.4	680	0.73	83	0.33	680	<0.05	71
26.93		18	660	1.5	86	9.2	660	0.77	83	0.37	660	<0.05	71
23.33		21	640	1.7	87	10	640	0.85	84	0.42	640	<0.05	71
20.30		24	620	1.8	87	12	620	0.94	85	0.49	620	<0.05	71
24.44	27/5	20	415	0.99	90	10	415	0.52	86	0.40	415	<0.05	82
23.22		21	420	1.1	90	10	420	0.55	86	0.43	420	<0.05	82
20.37		24	455	1.3	90	12	455	0.67	87	0.49	455	<0.05	82
17.28		28	455	1.5	91	14	455	0.78	88	0.57	455	<0.05	82
15.60		32	455	1.7	91	16	455	0.86	89	0.64	455	<0.05	82
13.73		36	455	1.9	92	18	455	0.97	89	0.72	455	<0.05	82
12.96		38	455	2.0	92	19	455	1.0	90	0.77	455	<0.05	82
11.03		45	455	2.3	92	22	455	1.2	90	0.90	455	0.05	82
10.03		49	450	2.5	92	24	455	1.3	91	0.99	455	0.06	82
8.69		57	440	2.9	92	28	455	1.5	91	1.1	455	0.07	82
7.56		66	435	3.3	93	33	455	1.7	92	1.3	455	0.08	82

Technical data S..77p

S..77p

i_{tot}	i_s	n_e = 3400 min^{-1}				n_e = 3200 min^{-1}				n_e = 2800 min^{-1}			
		n_a	M_{amax}	P_{Mot}	η	n_a	M_{amax}	P_{Mot}	η	n_a	M_{amax}	P_{Mot}	η
		min^{-1}	Nm	kW	%	min^{-1}	Nm	kW	%	min^{-1}	Nm	kW	%
256.47	40/1	13	1470	2.6	78	12	1480	2.5	78	10	1500	2.2	78
225.26		15	1420	2.9	78	14	1440	2.7	78	12	1480	2.5	78
214.00		15	1410	3.0	78	14	1420	2.8	78	13	1470	2.6	78
189.09		17	1370	3.3	78	16	1380	3.1	78	14	1420	2.8	78
161.60		21	1290	3.6	78	19	1330	3.5	78	17	1370	3.2	78
148.15		22	1260	3.9	78	21	1280	3.7	78	18	1340	3.4	78
130.00		26	1210	4.2	78	24	1230	4.1	78	21	1290	3.7	78
123.20		27	1130	4.2	78	25	1210	4.2	78	22	1260	3.8	78

i_{tot}	i_s	n_e = 3400 min^{-1}				n_e = 3200 min^{-1}				n_e = 2800 min^{-1}			
		n_a min^{-1}	M_{amax} Nm	P_{Mot} kW	η %	n_a min^{-1}	M_{amax} Nm	P_{Mot} kW	η %	n_a min^{-1}	M_{amax} Nm	P_{Mot} kW	η %
107.83	40/3	31	950	4.1	77	29	1040	4.2	78	25	1210	4.2	78
97.14		35	860	4.1	77	32	900	4.0	77	28	1100	4.3	78
85.22		39	770	4.2	76	37	820	4.2	77	32	930	4.1	78
75.20		45	675	4.2	76	42	725	4.2	76	37	830	4.2	77
66.67		50	585	4.2	75	47	635	4.2	75	41	745	4.3	77
56.92		59	485	4.1	74	56	530	4.2	74	49	635	4.3	76
75.09		45	1160	6.1	90	42	1190	5.9	90	37	1210	5.3	90
71.33		47	1150	6.4	90	44	1170	6.1	90	39	1210	5.5	90
63.03		53	1110	7.0	90	50	1140	6.7	90	44	1170	6.1	90
53.87		63	1070	7.9	90	59	1080	7.5	90	51	1120	6.8	90
49.38		68	1030	8.3	90	64	1060	8.0	90	56	1100	7.3	90
43.33		78	910	8.4	90	73	1010	8.7	90	64	1060	8.0	90
41.07		82	900	8.7	90	77	910	8.3	90	68	1050	8.3	90
35.94		94	800	8.9	89	89	850	8.9	89	77	910	8.3	90
32.38		105	725	9.0	89	98	770	8.9	89	86	880	8.9	90
28.41		119	635	9.0	89	112	680	9.0	89	98	780	9.0	89
25.07		135	560	9.0	88	127	600	9.1	89	111	695	9.1	89
22.22		153	485	8.8	88	144	525	9.0	88	126	615	9.1	89
18.97		179	395	8.5	87	168	440	8.9	88	147	520	9.1	89
22.89	34/6	148	665	11.1*	93	139	680	10.7	93	122	710	9.8	93
20.99		161	620	11.3*	93	152	660	11.3*	93	133	690	10.4	93
18.42		184	590	12.3*	93	173	590	11.6*	93	152	660	11.3*	93
17.45		194	590	13.0*	93	183	590	12.2*	93	160	635	11.5*	93
15.28		222	530	13.3*	93	209	560	13.2*	93	183	590	12.2*	93
13.76		247	480	13.4*	93	232	505	13.3*	93	203	585	13.4*	93
12.07		281	415	13.3*	92	265	445	13.4*	92	231	515	13.5*	93
10.65		319	365	13.3*	92	300	390	13.3	92	262	455	13.5*	93
9.44		360	315	13.0*	92	338	345	13.3*	92	296	405	13.6*	92
8.06		421	260	12.6*	91	397	285	12.9*	92	347	340	13.4*	92

* P_{Mot_max} = 11.0 kW

S..77p

i_{tot}	i_s	n_e = 2200 min^{-1}				n_e = 1700 min^{-1}				n_e = 1400 min^{-1}			
		n_a min^{-1}	M_{amax} Nm	P_{Mot} kW	η %	n_a min^{-1}	M_{amax} Nm	P_{Mot} kW	η %	n_a min^{-1}	M_{amax} Nm	P_{Mot} kW	η %
256.47	40/1	8.5	1500	1.7	77	6.6	1500	1.4	77	5.4	1500	1.1	76
225.26		9.7	1500	2.0	78	7.5	1500	1.5	77	6.2	1500	1.3	76
214.00		10	1500	2.1	78	7.9	1500	1.6	77	6.5	1500	1.3	77
189.09		11	1490	2.3	78	8.9	1500	1.8	78	7.4	1500	1.5	77
161.60		13	1450	2.6	78	10	1500	2.1	78	8.6	1500	1.7	78
148.15		14	1420	2.8	79	11	1500	2.3	78	9.4	1500	1.9	78
130.00		16	1380	3.1	79	13	1470	2.6	79	10	1500	2.2	78
123.20		17	1370	3.3	79	13	1460	2.7	79	11	1500	2.3	79
107.83		20	1320	3.6	79	15	1410	3.0	79	12	1470	2.5	79
97.14		22	1270	3.8	79	17	1370	3.2	79	14	1440	2.8	79
85.22		25	1220	4.2	79	19	1320	3.5	79	16	1390	3.0	79
75.20		29	1120	4.4	79	22	1270	3.8	79	18	1340	3.3	79
66.67		32	960	4.2	78	25	1220	4.1	79	20	1290	3.6	79
56.92		38	830	4.3	78	29	1140	4.5	79	24	1230	4.0	80
75.09	40/3	29	1280	4.4	90	22	1320	3.5	89	18	1360	3.0	89
71.33		30	1270	4.6	90	23	1320	3.7	90	19	1350	3.1	89
63.03		34	1230	5.0	90	26	1290	4.1	90	22	1320	3.4	90
53.87		40	1200	5.7	90	31	1250	4.6	90	25	1300	3.9	90
49.38		44	1170	6.1	90	34	1230	4.9	90	28	1280	4.2	90
43.33		50	1130	6.7	90	39	1210	5.5	90	32	1250	4.7	90
41.07		53	1110	6.9	90	41	1190	5.7	90	34	1240	4.9	90
35.94		61	1080	7.7	90	47	1150	6.3	90	38	1210	5.5	90
32.38		67	1040	8.2	90	52	1120	6.8	90	43	1180	5.9	90
28.41		77	930	8.4	90	59	1080	7.5	90	49	1140	6.5	90
25.07		87	870	8.9	90	67	1040	8.2	90	55	1100	7.1	90
22.22		99	790	9.1	90	76	970	8.6	90	63	1070	7.8	90
18.97		115	680	9.2	90	89	860	9.0	90	73	1010	8.6	91
22.89	34/6	96	760	8.2	93	74	810	6.8	93	61	840	5.8	93
20.99		104	745	8.8	93	80	790	7.2	93	66	820	6.2	93
18.42		119	720	9.7	93	92	765	7.9	93	76	800	6.8	93
17.45		126	720	10.2	93	97	760	8.3	93	80	795	7.2	93
15.28		143	720	11.6*	93	111	730	9.1	93	91	765	7.9	93
13.76		159	725	13.0*	93	123	720	10.0	93	101	745	8.5	93
12.07		182	650	13.3*	93	140	725	11.4*	93	115	720	9.4	93
10.65		206	580	13.5*	93	159	725	13.0*	93	131	720	10.6	93
9.44		233	520	13.7*	93	180	655	13.2*	93	148	725	12.0*	94
8.06		272	445	13.7*	93	210	575	13.6*	93	173	680	13.2*	94

* P_{Mot_max} = 11.0 kW

S..77p

i_{tot}	i_s	n_e = 1100 min^{-1}				n_e = 900 min^{-1}				n_e = 700 min^{-1}			
		n_a min^{-1}	M_{amax} Nm	P_{Mot} kW	η %	n_a min^{-1}	M_{amax} Nm	P_{Mot} kW	η %	n_a min^{-1}	M_{amax} Nm	P_{Mot} kW	η %
256.47	40/1	4.2	1500	0.91	74	3.5	1500	0.76	73	2.7	1500	0.61	71
225.26		4.8	1500	1.0	75	3.9	1500	0.85	74	3.1	1500	0.68	72
214.00		5.1	1500	1.1	76	4.2	1500	0.89	74	3.2	1500	0.71	72
189.09		5.8	1500	1.2	76	4.7	1500	0.99	75	3.7	1500	0.79	74
161.60		6.8	1500	1.4	77	5.5	1500	1.1	76	4.3	1500	0.91	75
148.15		7.4	1500	1.5	77	6.0	1500	1.2	77	4.7	1500	0.99	75
130.00		8.4	1500	1.7	78	6.9	1500	1.4	77	5.3	1500	1.1	76
123.20		8.9	1500	1.8	78	7.3	1500	1.5	77	5.6	1500	1.2	76
107.83		10	1500	2.0	79	8.3	1500	1.7	78	6.4	1500	1.3	77
97.14		11	1500	2.3	79	9.2	1500	1.9	78	7.2	1500	1.5	78
85.22		12	1470	2.5	79	10	1500	2.1	79	8.2	1500	1.6	78
75.20		14	1430	2.8	79	11	1490	2.4	79	9.3	1500	1.9	79
66.67		16	1380	3.0	80	13	1450	2.6	79	10	1500	2.1	79
56.92		19	1330	3.4	80	15	1400	2.9	80	12	1480	2.4	80
75.09	40/3	14	1390	2.4	89	11	1420	2.0	88	9.3	1440	1.6	87
71.33		15	1390	2.5	89	12	1410	2.1	88	9.8	1440	1.7	87
63.03		17	1380	2.8	89	14	1390	2.3	89	11	1430	1.9	88
53.87		20	1350	3.2	89	16	1380	2.7	89	12	1400	2.2	88
49.38		22	1320	3.4	90	18	1360	2.9	89	14	1390	2.3	89
43.33		25	1300	3.8	90	20	1350	3.3	90	16	1380	2.6	89
41.07		26	1300	4.1	90	21	1330	3.4	90	17	1380	2.8	89
35.94		30	1270	4.5	90	25	1300	3.8	90	19	1350	3.1	90
32.38		33	1240	4.9	90	27	1290	4.2	90	21	1320	3.3	90
28.41		38	1210	5.4	90	31	1250	4.6	90	24	1280	3.7	90
25.07		43	1180	6.0	90	35	1230	5.1	90	27	1240	4.0	90
22.22		49	1140	6.5	91	40	1200	5.6	91	31	1200	4.4	90
18.97		57	1090	7.3	91	47	1150	6.3	91	36	1150	4.9	90
22.89	34/6	48	850	4.6	93	39	850	3.8	93	30	850	2.9	92
20.99		52	850	5.0	93	42	850	4.1	93	33	850	3.2	93
18.42		59	840	5.6	93	48	850	4.7	93	38	850	3.6	93
17.45		63	830	5.9	93	51	850	4.9	93	40	850	3.8	93
15.28		71	820	6.6	93	58	840	5.6	93	45	850	4.4	93
13.76		79	795	7.1	93	65	830	6.1	93	50	850	4.9	93
12.07		91	765	7.8	93	74	810	6.8	93	57	840	5.5	93
10.65		103	750	8.7	93	84	785	7.4	93	65	830	6.1	93
9.44		116	720	9.4	94	95	765	8.2	94	74	810	6.7	94
8.06		136	725	11.1*	94	111	730	9.1	94	86	785	7.6	94

* P_{Mot_max} = 11.0 kW

S..77p

i_{tot}	i_s	n_e = 500 min^{-1}				n_e = 250 min^{-1}				n_e = 10 min^{-1}			
		n_a min^{-1}	M_{amax} Nm	P_{Mot} kW	η %	n_a min^{-1}	M_{amax} Nm	P_{Mot} kW	η %	n_a min^{-1}	M_{amax} Nm	P_{Mot} kW	η %
256.47	40/1	1.9	1500	0.46	67	0.97	1500	0.26	59	0.03	1500	<0.05	57
225.26		2.2	1500	0.51	69	1.1	1500	0.29	60	0.04	1500	<0.05	57
214.00		2.3	1500	0.53	69	1.1	1500	0.30	61	0.04	1500	<0.05	57
189.09		2.6	1500	0.59	71	1.3	1500	0.33	63	0.05	1500	<0.05	57
161.60		3.0	1500	0.67	72	1.5	1500	0.38	65	0.06	1500	<0.05	57
148.15		3.3	1500	0.73	73	1.6	1500	0.40	66	0.06	1500	<0.05	57
130.00		3.8	1500	0.82	74	1.9	1500	0.45	67	0.07	1500	<0.05	57
123.20		4.0	1500	0.86	74	2.0	1500	0.47	68	0.08	1500	<0.05	57
107.83		4.6	1500	0.97	75	2.3	1500	0.52	70	0.09	1500	<0.05	57
97.14		5.1	1500	1.1	76	2.5	1500	0.57	71	0.10	1500	<0.05	57
85.22		5.8	1500	1.2	77	2.9	1500	0.64	72	0.11	1500	<0.05	57
75.20		6.6	1500	1.3	78	3.3	1500	0.71	73	0.13	1500	<0.05	57
66.67		7.4	1500	1.5	78	3.7	1500	0.79	74	0.14	1500	<0.05	57
56.92		8.7	1500	1.8	79	4.3	1500	0.91	76	0.17	1500	<0.05	57
75.09	40/3	6.6	1450	1.2	85	3.3	1460	0.64	80	0.13	1500	<0.05	77
71.33		7.0	1460	1.3	85	3.5	1460	0.67	80	0.14	1500	<0.05	77
63.03		7.9	1460	1.4	86	3.9	1460	0.74	82	0.15	1460	<0.05	77
53.87		9.2	1450	1.6	87	4.6	1450	0.85	83	0.18	1450	<0.05	77
49.38		10	1440	1.7	87	5.0	1440	0.92	83	0.20	1440	<0.05	77
43.33		11	1430	2.0	88	5.7	1440	1.0	84	0.23	1440	<0.05	77
41.07		12	1400	2.0	88	6.0	1400	1.1	85	0.24	1400	<0.05	77
35.94		13	1360	2.2	89	6.9	1360	1.2	86	0.27	1360	0.05	77
32.38		15	1320	2.4	89	7.7	1320	1.2	86	0.30	1320	0.06	77
28.41		17	1280	2.6	89	8.7	1280	1.4	87	0.35	1280	0.06	77
25.07		19	1240	2.9	90	9.9	1240	1.5	87	0.39	1240	0.07	77
22.22		22	1200	3.1	90	11	1200	1.6	88	0.45	1200	0.07	77
18.97		26	1150	3.5	90	13	1150	1.8	89	0.52	1150	0.08	77
22.89	34/6	21	850	2.1	92	10	850	1.1	89	0.43	850	<0.05	84
20.99		23	850	2.3	92	11	850	1.2	89	0.47	850	0.05	84
18.42		27	850	2.6	92	13	850	1.3	90	0.54	850	0.06	84
17.45		28	850	2.8	92	14	850	1.4	90	0.57	850	0.06	84
15.28		32	850	3.1	93	16	850	1.6	91	0.65	850	0.07	84
13.76		36	850	3.5	93	18	850	1.8	91	0.72	850	0.08	84
12.07		41	850	4.0	93	20	850	2.0	92	0.82	850	0.09	84
10.65		46	850	4.5	93	23	850	2.3	92	0.93	850	0.10	84
9.44		52	850	5.1	93	26	850	2.6	92	1.0	850	0.11	84
8.06		62	830	5.8	94	31	850	3.0	93	1.2	850	0.13	84

Technical data S..87p

S..87p

i_{tot}	i_s	n_e = 3400 min^{-1}				n_e = 3200 min^{-1}				n_e = 2800 min^{-1}			
		n_a min^{-1}	M_{amax} Nm	P_{Mot} kW	η %	n_a min^{-1}	M_{amax} Nm	P_{Mot} kW	η %	n_a min^{-1}	M_{amax} Nm	P_{Mot} kW	η %
288.00	40/1	11	2580	4.0	80	11	2600	3.8	80	9.7	2680	3.4	80
258.18		13	2500	4.3	80	12	2520	4.1	80	10	2600	3.7	80
222.40		15	2400	4.8	80	14	2430	4.6	80	12	2520	4.2	80
202.96		16	2350	5.2	80	15	2370	4.9	80	13	2460	4.4	80
180.00		18	2240	5.6	80	17	2300	5.4	80	15	2380	4.9	80
151.30		22	1950	5.8	79	21	2120	5.9	80	18	2260	5.5	80

i_{tot}	i_s	n_e = 3400 min^{-1}				n_e = 3200 min^{-1}				n_e = 2800 min^{-1}			
		n_a min^{-1}	M_{amax} Nm	P_{Mot} kW	η %	n_a min^{-1}	M_{amax} Nm	P_{Mot} kW	η %	n_a min^{-1}	M_{amax} Nm	P_{Mot} kW	η %
139.05		24	1860	6.0	79	23	1900	5.8	79	20	2210	5.8	80
123.48		27	1580	5.8	78	25	1730	6.0	79	22	1970	5.9	80
110.40		30	1430	5.9	78	28	1540	6.0	78	25	1820	6.1	79
99.26		34	1260	5.9	77	32	1380	6.0	78	28	1570	5.9	79
86.15		39	1030	5.6	76	37	1150	5.8	77	32	1390	6.1	78
77.14		44	830	5.2	74	41	970	5.6	75	36	1220	6.0	77
64.00		53	500	4.1	69	50	620	4.5	71	43	960	5.8	76
91.20		37	2140	9.2	91	35	2180	8.8	91	30	2230	7.9	91
81.76		41	2070	9.9	91	39	2100	9.5	91	34	2180	8.6	91
70.43		48	1980	11.0	91	45	2030	10.6	91	39	2090	9.6	91
64.27		52	1940	11.8	91	49	1970	11.3	91	43	2060	10.3	91
57.00		59	1860	12.8	91	56	1900	12.3	91	49	1980	11.2	91
47.91		70	1600	13.2	90	66	1760	13.6	91	58	1880	12.7	91
44.03	38/3	77	1470	13.2	90	72	1570	13.2	90	63	1830	13.4	91
39.10		86	1300	13.2	90	81	1400	13.3	90	71	1620	13.4	91
34.96		97	1140	13.0	90	91	1240	13.2	90	80	1440	13.4	90
31.43		108	1000	12.7	89	101	1090	13.0	89	89	1290	13.4	90
27.28		124	810	12.0	88	117	910	12.6	89	102	1110	13.3	90
24.43		139	660	11.0	87	130	775	12.0	88	114	960	12.9	89
20.27		167	395	8.2	84	157	490	9.4	86	138	755	12.3	89
25.50		133	1070	16.0	93	125	1090	15.4	93	109	1160	14.3	93
21.43		158	990	17.7	93	149	1020	17.1	93	130	1080	15.8	93
19.70		172	990	19.0*	93	162	990	18.1	93	142	1040	16.6	93
17.49		194	870	19.0*	93	182	930	19.0*	93	160	990	17.8	93
15.64	34/6	217	760	19.0*	93	204	830	19.0*	93	179	960	19.0*	93
14.06		241	660	18.1	92	227	725	19.0*	93	199	860	19.0*	93
12.21		278	540	17.2	92	262	605	18.0	92	229	730	19.0*	93
10.93		311	440	15.7	91	292	510	17.1	92	256	645	19.0*	92
9.07		374	255	11.3	89	352	325	13.3	90	308	500	17.6	92
7.88		431	200	10.4	87	406	230	11.1	88	355	375	15.3	91

* P_{Mot_max} = 18.5 kW

S..87p

i_{tot}	i_s	n_e = 2200 min^{-1}				n_e = 1700 min^{-1}				n_e = 1400 min^{-1}			
		n_a min^{-1}	M_{amax} Nm	P_{Mot} kW	η %	n_a min^{-1}	M_{amax} Nm	P_{Mot} kW	η %	n_a min^{-1}	M_{amax} Nm	P_{Mot} kW	η %
288.00	40/1	7.6	2770	2.8	80	5.9	2900	2.3	79	4.8	3000	2.0	78
258.18		8.5	2720	3.0	80	6.5	2840	2.5	79	5.4	2920	2.1	79
222.40		9.8	2660	3.4	80	7.6	2770	2.8	80	6.2	2860	2.4	79
202.96		10	2610	3.7	80	8.3	2730	3.0	80	6.8	2820	2.6	80
180.00		12	2540	4.1	80	9.4	2680	3.3	80	7.7	2780	2.8	80
151.30		14	2440	4.6	80	11	2580	3.8	80	9.2	2680	3.2	80
139.05		15	2380	4.9	80	12	2540	4.0	80	10	2670	3.5	80
123.48		17	2310	5.4	80	13	2460	4.4	80	11	2580	3.8	80
110.40		19	2210	5.8	80	15	2390	4.8	81	12	2510	4.1	81
99.26		22	2080	6.0	80	17	2340	5.2	81	14	2440	4.5	81
86.15		25	1870	6.3	80	19	2220	5.7	81	16	2360	5.0	81
77.14		28	1620	6.1	79	22	2130	6.1	81	18	2280	5.4	81
64.00		34	1360	6.2	79	26	1860	6.4	80	21	2160	6.1	81
91.20	38/3	24	2330	6.5	91	18	2420	5.2	91	15	2490	4.4	90
81.76		26	2280	7.1	91	20	2400	5.8	91	17	2460	4.9	90
70.43		31	2210	8.0	91	24	2330	6.5	91	19	2400	5.5	91
64.27		34	2190	8.6	91	26	2300	7.0	91	21	2380	6.0	91
57.00		38	2110	9.4	91	29	2230	7.7	91	24	2330	6.6	91
47.91		45	2030	10.7	91	35	2150	8.8	91	29	2260	7.6	91
44.03		49	1970	11.3	91	38	2110	9.4	91	31	2210	8.1	91
39.10		56	1890	12.3	91	43	2050	10.2	91	35	2160	8.9	91
34.96		62	1820	13.2	91	48	1990	11.1	91	40	2090	9.6	91
31.43		69	1720	13.9	91	54	1930	12.0	91	44	2040	10.4	91
27.28		80	1450	13.5	91	62	1840	13.2	91	51	1970	11.6	91
24.43		90	1310	13.7	90	69	1760	14.1	91	57	1890	12.4	91
20.27		108	1080	13.6	90	83	1450	14.0	91	69	1760	13.9	91
25.50	34/6	86	1270	12.3	94	66	1410	10.5	94	54	1440	8.8	94
21.43		102	1240	14.3	94	79	1320	11.7	94	65	1420	10.4	94
19.70		111	1240	15.5	94	86	1270	12.3	94	71	1370	10.9	94
17.49		125	1240	17.4	94	97	1240	13.5	94	80	1310	11.7	94
15.64		140	1230	19.0*	94	108	1240	15.1	94	89	1260	12.6	94
14.06		156	1110	19.0*	94	120	1240	16.8	94	99	1240	13.8	94
12.21		180	970	20.0*	93	139	1240	19.0*	94	114	1240	15.9	94
10.93		201	870	20.0*	93	155	1130	20.0*	94	128	1240	17.7	94
9.07		242	720	20.0*	93	187	950	20.0*	94	154	1140	20.0*	94
7.88		279	605	19.0*	93	215	830	20.0*	93	177	1010	20.0*	94

* P_{Mot_max} = 18.5 kW

S..87p

i_{tot}	i_s	n_e = 1100 min^{-1}				n_e = 900 min^{-1}				n_e = 700 min^{-1}			
		n_a min^{-1}	M_{amax} Nm	P_{Mot} kW	η %	n_a min^{-1}	M_{amax} Nm	P_{Mot} kW	η %	n_a min^{-1}	M_{amax} Nm	P_{Mot} kW	η %
288.00	40/1	3.8	3000	1.6	77	3.1	3000	1.3	76	2.4	3000	1.0	74
258.18		4.2	2970	1.7	78	3.4	2970	1.4	77	2.7	2970	1.1	75
222.40		4.9	2950	1.9	79	4.0	2970	1.6	78	3.1	2970	1.3	76
202.96		5.4	2910	2.1	79	4.4	2970	1.8	78	3.4	2990	1.4	77
180.00		6.1	2890	2.3	79	5.0	2930	2.0	79	3.8	2990	1.6	77
151.30		7.2	2790	2.7	80	5.9	2880	2.3	79	4.6	2980	1.8	78
139.05		7.9	2780	2.9	80	6.4	2870	2.4	80	5.0	2960	2.0	79
123.48		8.9	2700	3.1	80	7.2	2790	2.7	80	5.6	2900	2.2	79
110.40		9.9	2650	3.4	81	8.1	2750	2.9	80	6.3	2860	2.4	80
99.26		11	2600	3.7	81	9.0	2700	3.2	81	7.0	2810	2.6	80
86.15		12	2510	4.2	81	10	2630	3.6	81	8.1	2750	2.9	81
77.14		14	2460	4.5	81	11	2560	3.9	81	9.0	2700	3.2	81
64.00		17	2330	5.2	81	14	2440	4.4	81	10	2600	3.7	81
91.20	38/3	12	2550	3.6	90	9.8	2310	2.7	89	7.6	2310	2.1	88
81.76		13	2530	4.0	90	11	2560	3.3	90	8.5	2610	2.6	89
70.43		15	2470	4.5	90	12	2530	3.8	90	9.9	2580	3.0	89
64.27		17	2440	4.8	91	14	2500	4.1	90	10	2560	3.3	90
57.00		19	2400	5.4	91	15	2470	4.5	90	12	2530	3.6	90
47.91		22	2350	6.2	91	18	2410	5.2	91	14	2500	4.2	90
44.03		24	2300	6.6	91	20	2400	5.7	91	15	2470	4.5	91
39.10		28	2280	7.4	91	23	2350	6.2	91	17	2440	5.0	91
34.96		31	2210	8.0	91	25	2300	6.8	91	20	2390	5.5	91
31.43		34	2170	8.7	91	28	2250	7.4	91	22	2370	6.1	91
27.28		40	2080	9.6	91	32	2190	8.3	91	25	2300	6.8	91
24.43		45	2030	10.5	91	36	2140	9.0	91	28	2250	7.4	91
20.27		54	1920	11.9	91	44	2030	10.3	92	34	2170	8.6	92
25.50	34/6	43	1440	7.0	93	35	1440	5.7	93	27	1440	4.5	93
21.43		51	1510	8.7	94	41	1510	7.1	94	32	1510	5.5	93
19.70		55	1500	9.4	94	45	1540	7.9	94	35	1570	6.3	93
17.49		62	1440	10.1	94	51	1510	8.7	94	40	1570	7.0	94
15.64		70	1380	10.8	94	57	1480	9.5	94	44	1540	7.7	94
14.06		78	1340	11.7	94	64	1440	10.3	94	49	1510	8.4	94
12.21		90	1340	13.5	94	73	1370	11.3	94	57	1460	9.3	94
10.93		100	1340	15.0	94	82	1360	12.5	94	64	1440	10.3	94
9.07		121	1340	18.1	94	99	1340	14.8	94	77	1380	11.9	94
7.88		139	1260	20.0*	94	114	1340	17.0	94	88	1340	13.3	94

* P_{Mot_max} = 18.5 kW

S..87p

i_{tot}	i_s	n_e = 500 min^{-1}				n_e = 250 min^{-1}				n_e = 10 min^{-1}			
		n_a min^{-1}	M_{amax} Nm	P_{Mot} kW	η %	n_a min^{-1}	M_{amax} Nm	P_{Mot} kW	η %	n_a min^{-1}	M_{amax} Nm	P_{Mot} kW	η %
288.00	40/1	1.7	3000	0.77	71	0.86	3000	0.43	63	0.03	3000	<0.05	60
258.18		1.9	2990	0.84	72	0.96	2990	0.47	64	0.03	3000	<0.05	60
222.40		2.2	3000	0.96	73	1.1	3000	0.54	66	0.04	3000	<0.05	60
202.96		2.4	3000	1.0	74	1.2	3000	0.58	67	0.04	3000	<0.05	60
180.00		2.7	3000	1.2	75	1.3	3000	0.64	68	0.05	3000	<0.05	60
151.30		3.3	3000	1.4	77	1.6	3000	0.74	70	0.06	3000	<0.05	60
139.05		3.5	3000	1.5	77	1.7	3000	0.79	71	0.07	3000	<0.05	60
123.48		4.0	2990	1.6	78	2.0	3000	0.88	73	0.08	3000	<0.05	60
110.40		4.5	2950	1.8	79	2.2	2950	0.95	74	0.09	2950	<0.05	60
99.26		5.0	2900	1.9	79	2.5	2900	1.0	75	0.10	2900	0.05	60
86.15		5.8	2880	2.2	80	2.9	2900	1.2	76	0.11	2900	0.06	60
77.14		6.4	2870	2.4	80	3.2	2900	1.3	77	0.12	2900	0.07	60
64.00		7.8	2770	2.8	81	3.9	2900	1.5	78	0.15	2900	0.08	60
91.20	38/3	5.4	2500	1.7	87	2.7	2280	0.80	82	0.10	2280	<0.05	80
81.76		6.1	2670	2.0	87	3.0	2500	0.97	83	0.12	2500	<0.05	80
70.43		7.0	2660	2.2	88	3.5	2580	1.1	84	0.14	2580	<0.05	80
64.27		7.7	2640	2.4	88	3.8	2530	1.2	85	0.15	2530	0.05	80
57.00		8.7	2620	2.7	89	4.3	2710	1.5	85	0.17	2790	0.06	80
47.91		10	2590	3.2	90	5.2	2690	1.7	86	0.20	2790	0.08	80
44.03		11	2560	3.4	90	5.6	2660	1.8	87	0.22	2790	0.08	80
39.10		12	2530	3.8	90	6.3	2660	2.0	88	0.25	2790	0.09	80
34.96		14	2510	4.2	90	7.1	2660	2.3	88	0.28	2810	0.11	80
31.43		15	2470	4.5	91	7.9	2610	2.5	89	0.31	2810	0.12	80
27.28		18	2440	5.2	91	9.1	2590	2.8	89	0.36	2790	0.13	80
24.43		20	2390	5.6	91	10	2590	3.1	90	0.40	2790	0.15	80
20.27		24	2320	6.6	91	12	2530	3.6	90	0.49	2810	0.18	80
25.50	34/6	19	1440	3.2	92	9.8	1440	1.6	90	0.39	1440	0.07	85
21.43		23	1510	4.0	93	11	1510	2.0	91	0.46	1510	0.09	85
19.70		25	1570	4.5	93	12	1570	2.3	91	0.50	1570	0.10	85
17.49		28	1570	5.0	93	14	1570	2.6	92	0.57	1570	0.11	85
15.64		31	1540	5.5	93	15	1540	2.8	92	0.63	1540	0.12	85
14.06		35	1510	6.0	94	17	1510	3.0	92	0.71	1510	0.13	85
12.21		40	1460	6.7	94	20	1460	3.4	93	0.81	1460	0.15	85
10.93		45	1440	7.4	94	22	1440	3.7	93	0.91	1440	0.16	85
9.07		55	1440	8.9	94	27	1440	4.5	93	1.1	1440	0.19	85
7.88		63	1440	10.2	94	31	1440	5.1	94	1.2	1440	0.22	85

Technical data S..97p

S..97p

i_{tot}	i_s	n_e = 3400 min^{-1}				n_e = 3200 min^{-1}				n_e = 2800 min^{-1}			
		n_a min^{-1}	M_{amax} Nm	P_{Mot} kW	η %	n_a min^{-1}	M_{amax} Nm	P_{Mot} kW	η %	n_a min^{-1}	M_{amax} Nm	P_{Mot} kW	η %
286.40	40/1	11	4300	6.6	81	11	4300	6.2	81	9.7	4300	5.4	81
262.22		12	4300	7.2	81	12	4300	6.8	81	10	4300	5.9	81
231.67		14	4150	7.9	81	13	4240	7.6	81	12	4300	6.7	81
196.52		17	3970	8.9	81	16	4010	8.4	81	14	4210	7.7	81
180.95		18	3780	9.2	81	17	3890	8.9	81	15	4090	8.2	81
161.74		21	3230	8.9	80	19	3540	9.1	81	17	3970	8.9	81
145.60		23	2800	8.6	79	21	3050	8.8	80	19	3720	9.3	81

i_{tot}	i_s	n_e = 3400 min^{-1}				n_e = 3200 min^{-1}				n_e = 2800 min^{-1}			
		n_a min^{-1}	M_{amax} Nm	P_{Mot} kW	η %	n_a min^{-1}	M_{amax} Nm	P_{Mot} kW	η %	n_a min^{-1}	M_{amax} Nm	P_{Mot} kW	η %
131.85		25	2660	9.1	79	24	2740	8.8	79	21	3250	9.0	80
116.92		29	2320	9.0	78	27	2550	9.3	79	23	2760	8.7	80
105.71		32	1980	8.6	77	30	2210	9.0	78	26	2630	9.2	79
89.60		37	1280	6.9	74	35	1670	8.2	76	31	2210	9.2	79
78.26		43	970	6.2	71	40	1130	6.6	73	35	1770	8.6	77
65.45		51	675	5.5	67	48	795	5.9	69	42	1110	6.8	73
80.85		42	3410	16.4	92	39	3480	15.7	92	34	3640	14.4	92
71.43		47	3280	17.8	92	44	3340	17.1	92	39	3480	15.6	92
60.59		56	3020	19	91	52	3180	19	92	46	3310	17.5	92
55.79		60	2820	20	91	57	2950	19	91	50	3210	18.4	92
49.87		68	2710	21	91	64	2760	20	91	56	3060	20	92
44.89	37/3	75	2430	21	91	71	2630	22	91	62	2790	20	91
40.65		83	2170	21	91	78	2350	21	91	68	2680	21	91
36.05		94	1830	20	90	88	2020	21	91	77	2400	21	91
32.60		104	1560	19	90	98	1760	20	90	85	2150	21	91
27.63		123	1070	15.6	88	115	1320	17.9	89	101	1740	20	90
24.13		140	810	13.8	87	132	940	14.9	88	116	1390	19	90
26.39		128	1800	26	94	121	1840	25	94	106	1930	23	94
23.59		144	1750	28	94	135	1750	27	94	118	1850	24	94
21.23		160	1750	31*	94	150	1750	29	94	131	1770	26	94
19.23		176	1550	31*	94	166	1680	31	94	145	1750	28	94
17.05	35/6	199	1320	30	93	187	1450	30	94	164	1730	32*	94
15.42		220	1110	28	93	207	1260	29	93	181	1540	31*	94
13.07		260	725	22	92	244	940	26	92	214	1240	30	93
11.41		297	515	17.9	90	280	585	19	91	245	1000	28	93
9.55		356	375	15.8	88	335	435	17.1	89	293	580	20	91
8.26		411	290	14.4	87	387	335	15.5	88	338	455	17.9	90

* P_{Mot_max} = 30 kW

S..97p

i_{tot}	i_s	n_e = 2200 min^{-1}				n_e = 1700 min^{-1}				n_e = 1400 min^{-1}			
		n_a min^{-1}	M_{amax} Nm	P_{Mot} kW	η %	n_a min^{-1}	M_{amax} Nm	P_{Mot} kW	η %	n_a min^{-1}	M_{amax} Nm	P_{Mot} kW	η %
286.40	40/1	7.6	4300	4.3	81	5.9	4300	3.3	80	4.8	4300	2.8	80
262.22		8.3	4300	4.7	81	6.4	4300	3.6	81	5.3	4300	3.0	80
231.67		9.4	4300	5.3	81	7.3	4300	4.1	81	6	4300	3.4	81
196.52		11	4300	6.2	81	8.6	4300	4.8	81	7.1	4300	4.0	81
180.95		12	4300	6.7	81	9.3	4300	5.2	81	7.7	4300	4.3	81
161.74		13	4260	7.5	81	10	4300	5.8	81	8.6	4300	4.8	81
145.60		15	4150	8.1	81	11	4300	6.5	82	9.6	4300	5.3	81
131.85		16	3980	8.6	81	12	4300	7.1	82	10	4300	5.9	82
116.92		18	3840	9.3	81	14	4170	7.8	82	11	4300	6.6	82
105.71		20	3430	9.2	81	16	4030	8.3	82	13	4290	7.3	82
89.60		24	2780	8.9	80	18	3800	9.3	82	15	4070	8.1	82
78.26		28	2540	9.4	80	21	3360	9.4	81	17	3910	8.9	82
65.45		33	2120	9.4	79	25	2690	9.1	81	21	3520	9.6	82
80.85	37/3	27	3720	11.6	92	21	3710	8.9	92	17	3700	7.3	91
71.43		30	3710	13.0	92	23	3940	10.7	92	19	4100	9.2	92
60.59		36	3570	14.8	92	28	3810	12.2	92	23	3980	10.5	92
55.79		39	3510	15.8	92	30	3730	13.0	92	25	3910	11.2	92
49.87		44	3360	16.9	92	34	3640	14.1	92	28	3810	12.2	92
44.89		49	3270	18.3	92	37	3540	15.3	92	31	3710	13.2	92
40.65		54	3130	19	92	41	3420	16.3	92	34	3600	14.1	92
36.05		61	2810	20	92	47	3300	17.7	92	38	3500	15.5	92
32.60		67	2700	21	92	52	3200	19	92	42	3390	16.6	92
27.63		79	2390	22	91	61	2850	20	92	50	3230	19	92
24.13		91	2060	22	91	70	2670	21	92	58	3080	20	92
26.39	35/6	83	2550	24	94	64	2600	19	94	53	2600	15.3	94
23.59		93	2450	25	94	72	2600	21	94	59	2600	17.1	94
21.23		103	2380	27	94	80	2570	23	94	65	2600	19	94
19.23		114	2280	29	94	88	2500	25	94	72	2600	21	95
17.05		129	2170	31*	94	99	2400	27	94	82	2570	23	95
15.42		142	2040	32*	94	110	2300	28	94	90	2470	25	95
13.07		168	1720	32*	94	130	2170	31*	94	107	2330	28	95
11.41		192	1480	32*	94	148	2000	33*	94	122	2210	30	95
9.55		230	1200	31*	94	178	1670	33*	94	146	2040	33*	94
8.26		266	980	29	93	205	1440	33*	94	169	1770	33*	94

* P_{Mot_max} = 30 kW

S..97p

i_{tot}	i_s	n_e = 1100 min^{-1}				n_e = 900 min^{-1}				n_e = 700 min^{-1}			
		n_a min^{-1}	M_{amax} Nm	P_{Mot} kW	η %	n_a min^{-1}	M_{amax} Nm	P_{Mot} kW	η %	n_a min^{-1}	M_{amax} Nm	P_{Mot} kW	η %
286.40	40/1	3.8	4300	2.2	79	3.1	4300	1.8	78	2.4	4300	1.4	77
262.22		4.1	4300	2.4	80	3.4	4300	2.0	79	2.6	4300	1.6	77
231.67		4.7	4300	2.7	80	3.8	4300	2.2	79	3.0	4300	1.7	78
196.52		5.5	4300	3.1	80	4.5	4300	2.6	80	3.5	4300	2.0	79
180.95		6.0	4300	3.4	81	4.9	4300	2.8	80	3.8	4300	2.2	79
161.74		6.8	4300	3.8	81	5.5	4300	3.1	81	4.3	4300	2.4	80
145.60		7.5	4300	4.2	81	6.1	4300	3.4	81	4.8	4300	2.7	80
131.85		8.3	4300	4.6	81	6.8	4300	3.8	81	5.3	4300	3.0	81
116.92		9.4	4300	5.2	82	7.6	4300	4.3	81	5.9	4300	3.3	81
105.71		10	4300	5.7	82	8.5	4300	4.7	82	6.6	4300	3.7	81
89.60		12	4300	6.7	82	10	4300	5.5	82	7.8	4300	4.3	82
78.26		14	4230	7.6	82	11	4300	6.3	82	8.9	4300	4.9	82
65.45		16	3980	8.5	82	13	4240	7.4	82	10	4300	5.9	82
80.85	37/3	13	3690	5.8	91	11	3670	4.7	91	8.6	3640	3.7	90
71.43		15	4200	7.4	92	12	4200	6.1	91	9.7	4200	4.8	91
60.59		18	4160	8.6	92	14	4270	7.3	92	11	4300	5.7	91
55.79		19	4110	9.2	92	16	4210	7.8	92	12	4300	6.2	91
49.87		22	4030	10.1	92	18	4160	8.6	92	14	4300	6.9	92
44.89		24	3930	11.0	92	20	4070	9.3	92	15	4270	7.6	92
40.65		27	3860	11.9	92	22	4030	10.2	92	17	4190	8.2	92
36.05		30	3740	13.0	92	24	3900	11.1	92	19	4110	9.1	92
32.60		33	3630	13.9	92	27	3820	12.0	92	21	4040	9.9	92
27.63		39	3490	15.8	92	32	3670	13.6	92	25	3900	11.2	92
24.13		45	3320	17.2	92	37	3560	15.1	92	29	3770	12.4	92
26.39	35/6	41	2650	12.3	94	34	2620	9.9	94	26	2700	8.0	94
23.59		46	2650	13.7	94	38	2650	11.2	94	29	2670	8.8	94
21.23		51	2650	15.2	94	42	2650	12.5	94	32	2620	9.6	94
19.23		57	2650	16.8	95	46	2650	13.8	94	36	2620	10.6	94
17.05		64	2670	19	95	52	2650	15.5	95	41	2650	12.1	94
15.42		71	2670	21	95	58	2650	17.1	95	45	2650	13.3	95
13.07		84	2540	24	95	68	2670	20	95	53	2650	15.7	95
11.41		96	2420	26	95	78	2590	23	95	61	2650	18.0	95
9.55		115	2280	29	95	94	2440	25	95	73	2650	21	95
8.26		133	2140	32*	95	108	2320	28	95	84	2540	24	95

* P_{Mot_max} = 30 kW

S..97p

i_{tot}	i_s	n_e = 500 min^{-1}				n_e = 250 min^{-1}				n_e = 10 min^{-1}			
		n_a	M_{amax}	P_{Mot}	η	n_a	M_{amax}	P_{Mot}	η	n_a	M_{amax}	P_{Mot}	η
		min^{-1}	Nm	kW	%	min^{-1}	Nm	kW	%	min^{-1}	Nm	kW	%
286.40	40/1	1.7	4300	1.1	74	0.87	4300	0.58	67	0.03	4300	<0.05	61
262.22		1.9	4300	1.1	75	0.95	4300	0.63	68	0.03	4300	<0.05	61
231.67		2.1	4300	1.3	76	1.0	4300	0.70	70	0.04	4300	<0.05	61
196.52		2.5	4300	1.5	77	1.2	4300	0.80	72	0.05	4300	<0.05	61
180.95		2.7	4300	1.6	78	1.3	4300	0.86	72	0.05	4300	<0.05	61
161.74		3.0	4300	1.8	79	1.5	4300	0.95	74	0.06	4300	<0.05	61
145.60		3.4	4300	2.0	79	1.7	4300	1.0	75	0.06	4300	0.05	61
131.85		3.7	4300	2.1	80	1.8	4300	1.1	75	0.07	4300	0.06	61
116.92		4.2	4300	2.4	80	2.1	4300	1.3	76	0.08	4300	0.06	61
105.71		4.7	4300	2.6	81	2.3	4300	1.4	77	0.09	4300	0.07	61
89.60		5.5	4300	3.1	81	2.7	4300	1.6	78	0.11	4300	0.08	61
78.26		6.3	4300	3.5	82	3.1	4300	1.8	79	0.12	4300	0.09	61
65.45		7.6	4300	4.2	82	3.8	4300	2.1	80	0.15	4300	0.11	61
80.85	37/3	6.1	3600	2.6	89	3.0	3250	1.2	86	0.12	3250	0.05	81
71.43		6.9	4200	3.4	90	3.4	4160	1.8	87	0.13	4160	0.08	81
60.59		8.2	4300	4.1	90	4.1	4300	2.1	88	0.16	4300	0.09	81
55.79		8.9	4300	4.5	91	4.4	4300	2.3	88	0.17	4300	0.10	81
49.87		10	4300	5.0	91	5.0	4300	2.6	89	0.20	4300	0.11	81
44.89		11	4300	5.5	91	5.5	4300	2.8	89	0.22	4300	0.12	81
40.65		12	4300	6.1	91	6.1	4300	3.1	89	0.24	4300	0.14	81
36.05		13	4290	6.8	92	6.9	4300	3.5	90	0.27	4300	0.15	81
32.60		15	4280	7.5	92	7.6	4300	3.8	90	0.30	4300	0.17	81
27.63		18	4150	8.5	92	9.0	4300	4.5	91	0.36	4300	0.20	81
24.13		20	4070	9.6	92	10	4300	5.1	91	0.41	4300	0.23	81
26.39	35/6	18	2790	5.9	94	9.4	2790	3.0	92	0.37	2790	0.13	87
23.59		21	2710	6.4	94	10	2710	3.3	93	0.42	2710	0.14	87
21.23		23	2740	7.2	94	11	2790	3.7	93	0.47	2790	0.16	87
19.23		26	2700	7.8	94	13	2790	4.1	93	0.52	2790	0.17	87
17.05		29	2670	8.7	94	14	2790	4.6	93	0.58	2790	0.20	87
15.42		32	2620	9.4	94	16	2790	5.1	94	0.64	2790	0.22	87
13.07		38	2650	11.2	95	19	2790	6.0	94	0.76	2790	0.26	87
11.41		43	2650	12.9	95	21	2780	6.8	94	0.87	2790	0.29	87
9.55		52	2650	15.3	95	26	2700	7.8	94	1.0	2790	0.35	87
8.26		60	2650	17.7	95	30	2670	9.0	95	1.2	2790	0.41	87

4.6 W..DRN.. SPIROPLAN® right-angle gearmotors

4.6.1 Geometrically possible combinations W..DRN..

W10, n_e = 1400 min^{-1}					30 Nm
n_a min^{-1}	M_{amax} Nm	F_{Ra} N	$\varphi_{(/R)}$	i	DRN 63M 63MS 71M 71MS
					 1
18	25	1800	-	75.00*	✓
23	25	1800	-	60.00*	✓
29	25	1800	-	48.00*	✓
35	26	1800	-	39.00*	✓
43	28	1800	-	32.50*	✓
50	27	1800	-	27.50*	✓
57	25	1800	-	24.50*	✓
71	30	1800	-	19.50*	✓
84	27	1800	-	16.50*	✓
97	24	1800	-	14.33	✓
136	28	1800	-	10.25*	✓
170	23	1730	-	8.20*	✓
213	19	1670	-	6.57	✓

W20, n_e = 1400 min^{-1}						45 Nm
n_a min^{-1}	M_{amax} Nm	F_{Ra} N	$\varphi_{(/R)}$	i	DRN 63M 63MS 71M 71MS	DRN 80MK 80MS
					 1	
18	40	2200	-	75.00*	✓	
23	40	2200	-	60.00*	✓	
29	40	2200	-	48.00*	✓	
35	40	2200	-	39.00*	✓	
43	40	2200	-	32.50*	✓	
50	40	2200	-	27.50*	✓	
57	40	2200	-	24.50*	✓	✓
71	42	2190	-	19.50*	✓	✓
84	38	2090	-	16.50*	✓	✓
97	45	1920	-	14.33	✓	✓
136	36	1790	-	10.25*	✓	✓
170	29	1730	-	8.20*	✓	✓
213	24	1700	-	6.57	✓	✓

W30, n_e = 1400 min^{-1}						70 Nm
n_a min^{-1}	M_{amax} Nm	F_{Ra} N	$\varphi_{(/R)}$	i	DRN 63M 63MS 71M 71MS	DRN 80M 80MK
					 1	
18	70	3000	-	75.00*	✓	
23	70	3000	-	60.00*	✓	
29	70	3000	-	48.00*	✓	✓

W30, n_e = 1400 min^{-1} — **70 Nm**

n_a min^{-1}	M_{amax} Nm	F_{Ra} N	$\varphi_{(/R)}$	i	DRN 63M 63MS 71M 71MS	DRN 80M 80MK
35	70	3000	-	39.00*	✓	✓
43	70	3000	-	32.50*	✓	✓
50	70	3000	-	27.50*	✓	✓
57	70	3000	-	24.50*	✓	✓
71	70	3000	-	19.50*	✓	✓
85	68	3000	-	16.33	✓	✓
97	69	3000	-	14.33	✓	✓
136	63	2860	-	10.25*	✓	✓
170	65	2610	-	8.20*	✓	✓
213	62	2450	-	6.57	✓	✓

W19, n_e = 1400 min^{-1} — **80 Nm**

n_a min^{-1}	M_{amax} Nm	F_{Ra} N	$\varphi_{(/R)}$	i	DRN 63M 63MS 71M 71MS 80MK 80MS	DRN 80M
					 3	
8.3	80	2200	-	167.59	✓	
10	80	2200	-	127.90	✓	✓
11	80	2200	-	119.61	✓	
14	80	2200	-	96.28	✓	✓
15	80	2200	-	90.04	✓	
17	80	2200	-	82.03	✓	✓
18	80	2200	-	74.57	✓	✓
20	80	2200	-	68.71	✓	✓
22	80	2200	-	61.75	✓	✓
24	80	2200	-	56.14	✓	✓
26	80	2200	-	52.61	✓	✓
29	80	2200	-	47.28	✓	✓
31	80	2200	-	44.07	✓	✓
34	80	2200	-	40.07	✓	✓
41	80	1980	-	33.74	✓	✓
45	80	1890	-	30.68	✓	✓
					 2	
50	68	2000	-	27.71	✓	✓
67	61	1800	-	20.86	✓	✓
78	63	1690	-	17.77	✓	✓
86	62	1620	-	16.16	✓	✓
104	57	1510	-	13.38	✓	✓
115	56	1460	-	12.16	✓	✓
136	50	1370	-	10.24	✓	✓
150	50	1310	-	9.31	✓	✓
167	41	1280	-	8.38	✓	✓
183	43	1200	-	7.62	✓	✓
215	32	1210	-	6.49*	✓	✓
237	34	1130	-	5.90	✓	✓

W29, n_e = 1400 min^{-1} — **130 Nm**

n_a min^{-1}	M_{amax} Nm	F_{Ra} N	$\varphi_{(/R)}$	i	DRN 63M 63MS 71M 71MS 80MK 80MS	DRN 80M 90S
					 3	
7.4	130	3450	-	188.47	✓	
9.3	130	3450	-	149.43	✓	✓
10	130	3450	-	131.50	✓	
11	130	3450	-	119.55	✓	✓
12	130	3450	-	108.68	✓	✓
14	130	3450	-	99.87	✓	✓
14	130	3450	-	93.58	✓	
16	130	3450	-	83.41	✓	✓
17	130	3450	-	78.02	✓	✓
18	130	3450	-	74.19	✓	✓
20	130	3450	-	69.68	✓	✓
22	130	3450	-	62.41	✓	✓
24	130	3450	-	56.74	✓	✓
26	130	3450	-	52.14	✓	✓
28	130	3450	-	49.58	✓	✓
32	130	3450	-	43.54	✓	✓
36	130	3390	-	38.73*	✓	✓
38	130	3370	-	36.38	✓	✓
45	130	3070	-	30.99*	✓	✓
49	130	2940	-	28.17	✓	✓
54	130	2830	-	25.89	✓	✓
					 2	
60	130	2820	-	23.29	✓	✓
66	130	2710	-	21.17	✓	✓
71	130	2600	-	19.45	✓	✓
86	120	2410	-	16.25	✓	✓
94	126	2260	-	14.77	✓	✓
103	124	2190	-	13.57	✓	✓
121	85	2280	-	11.56*	✓	✓
133	90	2150	-	10.51	✓	✓
144	89	2070	-	9.66	✓	✓
175	58	2050	-	8.00	✓	✓
192	62	1930	-	7.27	✓	✓
209	62	1860	-	6.68	✓	✓
250	41	1880	-	5.60	✓	✓
275	43	1780	-	5.09	✓	✓
299	43	1720	-	4.68	✓	✓

W29R17, n_e = 1400 min^{-1} — **130 Nm**

n_a min^{-1}	M_{amax} Nm	F_{Ra} N	$\varphi_{(/R)}$	i	DRN 63M 63MS 71M 71MS 80MK 80MS	DRN 80M
					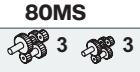 3 3	

W29R17, n_e = 1400 min^{-1} — **130 Nm**

n_a min^{-1}	M_{amax} Nm	F_{Ra} N	$\varphi_{(/R)}$	i	DRN 63M 63MS 71M 71MS 80MK 80MS	DRN 80M
0.11	130	3450	-	12199	✓	✓
0.13	130	3450	-	10518	✓	✓
0.14	130	3450	-	9760	✓	✓
0.16	130	3450	-	8570	✓	✓
0.18	130	3450	-	7650	✓	✓
0.2	130	3450	-	6810	✓	✓
0.23	130	3450	-	6057	✓	✓
0.25	130	3450	-	5473	✓	✓
0.28	130	3450	-	4868	✓	✓
0.32	130	3450	-	4328	✓	✓
0.36	130	3450	-	3856	✓	✓
0.45	130	3450	-	3078	✓	✓
0.56	130	3450	-	2474	✓	✓
0.63	130	3450	-	2191	✓	✓
0.79	130	3450	-	1767	✓	✓
					3 2	
0.4	130	3450	-	3459	✓	
0.5	130	3450	-	2768	✓	
0.71	130	3450	-	1968	✓	
0.88	130	3450	-	1582	✓	✓
0.99	130	3450	-	1411	✓	✓
1.1	130	3450	-	1260	✓	✓
1.2	130	3450	-	1128	✓	✓
1.3	130	3450	-	1008	✓	
1.5	130	3450	-	904	✓	✓
1.7	130	3450	-	810	✓	✓
1.9	130	3450	-	722	✓	✓
2.1	130	3450	-	644	✓	✓
2.4	130	3450	-	576	✓	✓
2.7	130	3450	-	513	✓	✓
5.2	130	3450	-	265	✓	✓
6.6	130	3450	-	210	✓	✓
					2 2	
3	130	3450	-	459	✓	✓
3.3	130	3450	-	417	✓	✓
3.7	130	3450	-	369	✓	✓
4.2	130	3450	-	330	✓	✓
4.7	130	3450	-	293	✓	✓
5.9	130	3450	-	236	✓	✓

W29HG, n_e = 1400 min^{-1} — **130 Nm**

n_a min^{-1}	M_{amax} Nm	F_{Ra} N	$\varphi_{(/R)}$	i	DRN 63M 63MS 71M 71MS
					3
0.66	130	3450	-	2100.14	✓

W29HG, n_e = 1400 min^{-1} — **130 Nm**

n_a min^{-1}	M_{amax} Nm	F_{Ra} N	$\varphi_{(/R)}$	i	DRN 63M 63MS 71M 71MS
0.95	130	3450	-	1465.23	✓
1.2	130	3450	-	1096.44	✓
1.3	130	3450	-	1042.71	✓
1.8	130	3450	-	764.97	✓
2	130	3450	-	694.66	✓
2.5	130	3450	-	544.38	✓
2.8	130	3450	-	484.65	✓
3.4	130	3450	-	409.26	✓
3.8	130	3450	-	362.67	✓
4	130	3450	-	344.90	✓
4.9	130	3450	-	285.53	✓
5.5	130	3450	-	253.03	✓
6.5	130	3450	-	213.66	✓
6.8	130	3450	-	203.19	✓

W39, n_e = 1400 min^{-1} — **200 Nm**

n_a min^{-1}	M_{amax} Nm	F_{Ra} N	$\varphi_{(/R)}$	i	DRN 63M 63MS 71M 71MS 80MK 80MS	DRN 80M 90S	DRN 90L
					 3		
6.6	200	4410	-	210.49	✓	✓	
8.8	200	4410	-	157.87	✓	✓	
9.9	200	4280	-	141.23	✓	✓	
11	200	4410	-	126.29	✓	✓	✓
12	200	4410	-	114.81	✓	✓	✓
13	200	4320	-	105.50	✓	✓	✓
14	186	4060	-	97.24	✓	✓	
15	200	4060	-	91.92	✓	✓	
16	200	3790	-	84.74	✓	✓	✓
18	200	3620	-	77.03	✓	✓	✓
19	200	3670	-	73.53	✓	✓	✓
19	200	3480	-	70.79	✓	✓	✓
20	200	3510	-	66.85	✓	✓	✓
22	200	3370	-	61.43	✓	✓	✓
23	186	3180	-	58.34	✓	✓	✓
26	186	3040	-	53.04	✓	✓	✓
28	200	2910	-	49.34	✓	✓	✓
31	200	2770	-	44.85	✓	✓	✓
33	200	2650	-	41.22	✓	✓	✓
41	196	2320	-	33.97	✓	✓	✓
45	196	2200	-	30.88	✓	✓	✓
49	196	2100	-	28.38	✓	✓	✓
					 2		
59	200	2070	-	23.68*	✓	✓	✓
65	200	1960	-	21.53	✓	✓	✓
70	200	1870	-	19.78	✓	✓	✓
88	170	1740	-	15.89	✓	✓	✓

W39, n_e = 1400 min^{-1} — **200 Nm**

n_a min^{-1}	M_{amax} Nm	F_{Ra} N	$\varphi_{(/R)}$	i	DRN 63M 63MS 71M 71MS 80MK 80MS	DRN 80M 90S	DRN 90L
96	175	1600	-	14.44	✓	✓	✓
105	175	1520	-	13.27	✓	✓	✓
127	125	1670	-	10.94	✓	✓	✓
140	127	1570	-	9.94	✓	✓	✓
153	124	1520	-	9.14	✓	✓	✓
183	88	1540	-	7.61	✓	✓	✓
202	80	1540	-	6.91	✓	✓	✓
220	80	1480	-	6.35	✓	✓	✓
247	66	1450	-	5.65	✓	✓	✓
272	59	1460	-	5.14	✓	✓	✓
296	59	1400	-	4.72	✓	✓	✓

W39R17, n_e = 1400 min^{-1} — **200 Nm**

n_a min^{-1}	M_{amax} Nm	F_{Ra} N	$\varphi_{(/R)}$	i	DRN 63M 63MS 71M 71MS 80MK 80MS	DRN 80M
					3 3	
0.08	200	4410	-	17184	✓	✓
0.09	200	4410	-	14816	✓	✓
0.1	200	4410	-	12889	✓	✓
0.12	200	4260	-	11530	✓	✓
0.13	200	4410	-	10358	✓	✓
0.14	200	4410	-	9373	✓	✓
0.16	200	4410	-	8487	✓	✓
0.18	200	4410	-	7620	✓	✓
0.2	200	4410	-	6975	✓	✓
0.22	200	4260	-	6289	✓	✓
0.25	200	4410	-	5579	✓	✓
0.28	200	4260	-	4983	✓	✓
0.31	200	4410	-	4433	✓	✓
0.35	200	4410	-	3953	✓	✓
0.4	200	4410	-	3488	✓	✓
					2 3	
1	200	4410	-	1273	✓	✓
					3 2	
0.44	200	4410	-	3112	✓	✓
0.5	200	4260	-	2784	✓	✓
0.55	200	4410	-	2501	✓	✓
0.62	200	4260	-	2237	✓	✓
0.7	200	4410	-	2000	✓	✓
0.78	200	4260	-	1786	✓	
0.87	200	4410	-	1602	✓	✓
0.98	200	4410	-	1422	✓	
1.2	200	4410	-	1136	✓	✓
1.3	200	4410	-	1018	✓	✓

W39R17, n_e = 1400 min^{-1}						200 Nm
n_a min^{-1}	M_{amax} Nm	F_{Ra} N	$\varphi_{(/R)}$	i	DRN 63M 63MS 71M 71MS 80MK 80MS	DRN 80M
1.5	200	4410	-	909	✓	✓
1.7	200	4260	-	812	✓	✓
1.9	200	4410	-	727	✓	✓
2.1	200	4410	-	649	✓	✓
2.4	200	4260	-	582	✓	✓
2.6	200	4260	-	521	✓	✓
6.1	200	4260	-	228	✓	✓
					 2 2	
2.9	200	4410	-	467	✓	✓
3.3	200	4410	-	424	✓	✓
3.7	200	4410	-	375	✓	✓
4.1	200	4410	-	336	✓	✓
4.6	200	4410	-	298	✓	✓
5.4	200	4410	-	257	✓	✓

W39HG, n_e = 1400 min^{-1}					200 Nm
n_a min^{-1}	M_{amax} Nm	F_{Ra} N	$\varphi_{(/R)}$	i	DRN 63M 63MS 71M 71MS
					 3
0.59	200	4410	-	2355.20	✓
0.88	200	4260	-	1580.24	✓
1	200	4410	-	1371.28	✓
1.1	200	4410	-	1228.80	✓
1.2	200	4170	-	1088.00	✓
1.5	200	4260	-	920.07	✓
1.6	200	4260	-	824.47	✓
1.9	200	4410	-	715.45	✓
2.3	200	4410	-	597.33	✓
2.4	200	4170	-	567.65	✓
2.9	200	4260	-	480.04	✓
3.4	200	4260	-	400.78	✓
4	200	4410	-	347.79	✓
4.2	200	4170	-	330.51	✓
5	200	4170	-	275.94	✓
5.9	200	4260	-	233.35	✓

W49, n_e = 1400 min^{-1}								400 Nm
n_a min^{-1}	M_{amax} Nm	F_{Ra} N	$\varphi_{(/R)}$	i	DRN 63M 63MS 71M 71MS 80MK 80MS	DRN 80M 90S	DRN 90L	DRN 100L 100LM 100LS
					 3			

W49, n_e = 1400 min^{-1} **400 Nm**

n_a min^{-1}	M_{amax} Nm	F_{Ra} N	$\varphi_{(/R)}$	i	DRN 63M 63MS 71M 71MS 80MK 80MS	DRN 80M 90S	DRN 90L	DRN 100L 100LM 100LS
6.9	396	6000	-	200.76	✓	✓		
9.2	396	6000	-	151.87	✓	✓		
9.3	400	6000	-	149.88	✓	✓		
11	396	6000	-	126.43	✓	✓	✓	✓
12	396	6000	-	114.94	✓	✓	✓	✓
13	396	6000	-	105.36	✓	✓	✓	✓
14	400	6000	-	94.39	✓	✓	✓	✓
15	396	6000	-	92.86	✓	✓		
16	400	6000	-	85.81	✓	✓	✓	✓
17	400	6000	-	78.66	✓	✓	✓	✓
19	396	6000	-	70.25	✓	✓		
20	400	6000	-	67.73	✓	✓	✓	✓
22	400	6000	-	61.58	✓	✓	✓	✓
23	396	6000	-	58.48	✓	✓	✓	✓
26	396	6000	-	53.16	✓	✓	✓	✓
28	396	6000	-	48.73	✓	✓	✓	✓
32	400	5570	-	43.66	✓	✓	✓	✓
35	400	5310	-	39.69	✓	✓	✓	✓
38	400	5070	-	36.38	✓	✓	✓	✓
44	378	4640	-	31.33	✓	✓	✓	✓
49	378	4400	-	28.48	✓	✓	✓	✓
53	378	4190	-	26.11	✓	✓	✓	✓
					 2			
61	342	4460	-	22.69	✓	✓	✓	✓
67	335	4290	-	20.63	✓	✓	✓	✓
74	327	4160	-	18.91	✓	✓	✓	✓
82	258	4300	-	16.94	✓	✓	✓	✓
90	290	3880	-	15.40	✓	✓	✓	✓
99	269	3860	-	14.12	✓	✓	✓	✓
115	184	4090	-	12.16	✓	✓	✓	✓
126	209	3720	-	11.05	✓	✓	✓	✓
138	193	3690	-	10.13	✓	✓	✓	✓
161	131	3820	-	8.67	✓	✓	✓	✓
177	149	3510	-	7.88	✓	✓	✓	✓
193	138	3470	-	7.22	✓	✓	✓	✓

W49R17, n_e = 1400 min^{-1} **400 Nm**

n_a min^{-1}	M_{amax} Nm	F_{Ra} N	$\varphi_{(/R)}$	i	DRN 63M 63MS 71M 71MS 80MK 80MS	DRN 80M
					 3 3	
0.08	396	6000	-	16390	✓	✓
0.09	396	6000	-	14131	✓	✓
0.1	396	6000	-	13172	✓	✓
0.11	400	6000	-	12236	✓	✓

W49R17, n_e = 1400 min^{-1}						400 Nm
n_a min^{-1}	M_{amax} Nm	F_{Ra} N	$\varphi_{(/R)}$	i	DRN 63M 63MS 71M 71MS 80MK 80MS	DRN 80M
0.12	396	6000	-	10793	✓	✓
0.14	400	6000	-	9834	✓	✓
0.15	396	6000	-	8899	✓	✓
0.17	396	6000	-	8165	✓	✓
0.18	396	6000	-	7416	✓	✓
0.21	400	6000	-	6644	✓	✓
0.23	400	6000	-	6040	✓	✓
0.25	400	6000	-	5413	✓	✓
0.29	400	6000	-	4787	✓	✓
0.32	400	6000	-	4335	✓	✓
0.36	400	6000	-	3884	✓	✓
0.4	400	6000	-	3475	✓	✓
0.45	400	6000	-	3106	✓	✓
0.49	400	6000	-	2847	✓	✓
0.61	400	6000	-	2276	✓	✓
					 3 2	
0.54	400	6000	-	2546	✓	✓
0.67	400	6000	-	2074	✓	✓
0.75	400	6000	-	1860	✓	✓
0.82	400	6000	-	1691	✓	✓
0.93	400	6000	-	1495	✓	✓
1	400	6000	-	1335	✓	✓
1.1	400	6000	-	1214	✓	✓
1.2	400	6000	-	1089	✓	✓
1.4	400	6000	-	983	✓	✓
1.5	400	6000	-	901	✓	✓
1.7	400	6000	-	815	✓	✓
1.8	400	6000	-	742	✓	✓
2	400	6000	-	674	✓	✓
2.3	400	6000	-	604	✓	✓
2.5	400	6000	-	544	✓	✓
2.8	400	6000	-	494	✓	✓
3.1	400	6000	-	443	✓	✓
3.5	400	6000	-	400	✓	✓
3.8	400	6000	-	362	✓	✓
4.2	400	6000	-	330	✓	✓
4.6	400	6000	-	300	✓	✓
5.2	396	6000	-	269	✓	✓
5.7	400	6000	-	244	✓	✓
6.3	400	6000	-	222	✓	✓

W49HG, n_e = 1400 min^{-1}					400 Nm
n_a min^{-1}	M_{amax} Nm	F_{Ra} N	$\varphi_{(/R)}$	i	DRN 63M 63MS 71M 71MS
					 3
0.57	400	6000	-	2426.20	✓

W49HG, n_e = 1400 min^{-1} — **400 Nm**

n_a min^{-1}	M_{amax} Nm	F_{Ra} N	$\varphi_{(/R)}$	i	DRN 63M 63MS 71M 71MS
0.77	400	6000	-	1811.30	✓
0.89	400	6000	-	1571.89	✓
1	400	6000	-	1315.60	✓
1.1	400	6000	-	1173.52	✓
1.4	400	6000	-	982.18	✓
1.6	400	6000	-	842.08	✓
1.9	400	6000	-	727.04	✓
1.9	400	6000	-	704.79	✓
2.1	400	6000	-	666.34	✓
2.3	400	6000	-	608.50	✓
2.3	400	6000	-	592.30	✓
2.8	400	6000	-	497.47	✓
3.1	400	6000	-	442.20	✓
3.3	400	6000	-	418.60	✓
3.9	400	6000	-	356.97	✓
4.4	400	6000	-	317.31	✓
4.4	400	6000	-	312.51	✓
4.5	400	6000	-	308.20	✓
5.1	400	6000	-	273.96	✓
6.2	400	6000	-	224.25	✓

W59, n_e = 1400 min^{-1} — **600 Nm**

n_a min^{-1}	M_{amax} Nm	F_{Ra} N	$\varphi_{(/R)}$	i	DRN 63M 63MS 71M 71MS 80MK 80MS	DRN 80M 90S	DRN 90L	DRN 100L 100LM 100LS	DRN 112M
						 3			
6.5	600	8000	-	213.21	✓	✓			
9.2	600	8000	-	151.56	✓	✓			
9.8	600	8000	-	142.72	✓	✓	✓	✓	
10	600	8000	-	129.74	✓	✓	✓	✓	
11	600	8000	-	118.93	✓	✓	✓	✓	✓
13	600	8000	-	107.33	✓	✓	✓	✓	✓
13	600	8000	-	101.45	✓	✓	✓	✓	
15	600	8000	-	92.23	✓	✓	✓	✓	
16	600	8000	-	84.54	✓	✓	✓	✓	✓
18	600	7680	-	76.29	✓	✓	✓	✓	✓
18	600	7700	-	73.72	✓	✓	✓	✓	
20	600	7340	-	67.02	✓	✓	✓	✓	
22	600	7020	-	61.43	✓	✓	✓	✓	✓
25	600	6650	-	55.44	✓	✓	✓	✓	✓
26	600	6300	-	52.40	✓	✓	✓	✓	
29	590	6050	-	47.64	✓	✓	✓	✓	
32	570	5900	-	43.67	✓	✓	✓	✓	✓
35	550	5700	-	39.41	✓	✓	✓	✓	✓
37	520	5470	-	36.98	✓	✓	✓	✓	
41	520	5180	-	33.62	✓	✓	✓	✓	
45	520	4930	-	30.82	✓	✓	✓	✓	✓

W59, n_e = 1400 min^{-1} — **600 Nm**

n_a min^{-1}	M_{amax} Nm	F_{Ra} N	$\varphi_{(/R)}$	i	DRN 63M 63MS 71M 71MS 80MK 80MS	DRN 80M 90S	DRN 90L	DRN 100L 100LM 100LS	DRN 112M
50	505	4740	-	27.81	✓	✓	✓	✓	✓
						2			
56	387	5560	-	24.89	✓	✓	✓	✓	
61	444	4940	-	22.63	✓	✓	✓	✓	
67	515	4260	-	20.74	✓	✓	✓	✓	✓
74	481	4220	-	18.72	✓	✓	✓	✓	✓
87	310	4890	-	16.09	✓	✓	✓	✓	
94	371	4280	-	14.75	✓	✓	✓	✓	✓
105	357	4150	-	13.31	✓	✓	✓	✓	✓
123	217	4650	-	11.35	✓	✓	✓	✓	
134	262	4150	-	10.41	✓	✓	✓	✓	✓
149	240	4110	-	9.39	✓	✓	✓	✓	✓
171	157	4320	-	8.18	✓	✓	✓	✓	
186	189	3910	-	7.49	✓	✓	✓	✓	✓
207	172	3860	-	6.76	✓	✓	✓	✓	✓

W59R37, n_e = 1400 min^{-1} — **600 Nm**

n_a min^{-1}	M_{amax} Nm	F_{Ra} N	$\varphi_{(/R)}$	i	DRN 63M 63MS 71M 71MS 80MK 80MS	DRN 80M 90S	DRN 90L	DRN 100L 100LM 100LS
					3	3		
0.07	600	8000	-	19242	✓			
0.07	600	8000	-	17649	✓			
0.08	600	8000	-	16044	✓			
0.09	600	8000	-	14707	✓			
0.1	600	8000	-	12955	✓	✓	✓	
0.12	600	8000	-	11405	✓			
0.13	600	8000	-	10063	✓	✓	✓	
0.15	600	8000	-	8796	✓	✓	✓	✓
0.18	600	8000	-	7674	✓	✓	✓	
0.2	600	8000	-	6692	✓	✓	✓	
0.24	600	8000	-	5814	✓	✓	✓	
0.27	600	8000	-	5032	✓	✓	✓	
0.32	600	8000	-	4367	✓	✓	✓	
0.36	600	8000	-	3788	✓	✓	✓	
0.42	600	8000	-	3311	✓	✓	✓	✓
					3	2		
0.48	600	8000	-	2889	✓	✓		
0.54	600	8000	-	2576	✓	✓	✓	
0.61	600	8000	-	2259	✓	✓		
0.7	600	8000	-	1986	✓			
0.8	600	8000	-	1745	✓			
0.91	600	8000	-	1526	✓	✓	✓	
1	600	8000	-	1331	✓	✓	✓	
1.1	600	8000	-	1167	✓	✓		

W59R37, n_e = 1400 min^{-1} **600 Nm**

n_a min^{-1}	M_{amax} Nm	F_{Ra} N	$\varphi_{(/R)}$	i	DRN 63M 63MS 71M 71MS 80MK 80MS	DRN 80M 90S	DRN 90L	DRN 100L 100LM 100LS
1.3	600	8000	-	1016	✓	✓	✓	✓
1.5	600	8000	-	888	✓	✓	✓	✓
1.8	600	8000	-	771	✓	✓	✓	✓
2	600	8000	-	674	✓	✓	✓	✓
2.3	600	8000	-	588	✓	✓	✓	✓
2.7	600	8000	-	513	✓	✓	✓	✓
3.1	600	8000	-	447	✓	✓	✓	✓
3.5	600	8000	-	398	✓	✓	✓	✓
4	600	8000	-	350	✓	✓	✓	✓
4.5	600	8000	-	311	✓	✓	✓	✓
5.1	600	8000	-	271	✓	✓	✓	✓
5.8	600	8000	-	240	✓	✓	✓	✓

W59HG, n_e = 1400 min^{-1} **600 Nm**

n_a min^{-1}	M_{amax} Nm	F_{Ra} N	$\varphi_{(/R)}$	i	DRN 63M 63MS 71M 71MS
					 3
0.65	600	7920	-	2123.38	✓
0.92	600	7920	-	1509.38	✓
0.96	600	7920	-	1444.60	✓
1.3	600	7920	-	1026.87	✓
1.5	600	7920	-	887.64	✓
1.8	600	7920	-	748.40	✓
2.2	600	7920	-	630.97	✓
2.6	600	7920	-	531.99	✓
3	600	7920	-	461.23	✓
3.7	600	7920	-	368.98	✓
4.2	600	7920	-	327.86	✓
5.3	600	7920	-	262.28	✓

4.6.2 Selection tables W..DRN.. in kW

P_N = 0.09 kW

n_a min^{-1}	M_a Nm	i	F_{Ra} N	SEW f_B	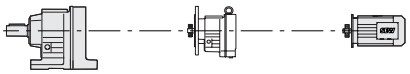			m kg
1.2	545	748.40	8000	1.10				
1.5	440	630.97	8000	1.35				
1.7	385	531.99	8000	1.55	**WA59HG**			20
2.0	370	461.23	8000	1.65	**WAF59HG**	-	**DRN63MR6**	22
2.5	300	368.98	8000	2.0	**WF59HG**			23
2.8	260	327.86	8000	2.3				
3.5	215	262.28	8000	2.8				
1.4	475	666.34	5690	0.85				
1.6	440	592.30	6000	0.90				
1.9	355	497.47	6000	1.10				
2.1	330	442.20	6000	1.20				
2.2	330	418.60	6000	1.20	**WA49HG**			16
2.6	255	356.97	6000	1.55	**WAF49HG**	-	**DRN63MR6**	17
2.9	235	317.31	6000	1.70	**WF49HG**			18
2.9	245	312.51	6000	1.60				
3.0	220	308.20	6000	1.80				
3.4	205	273.96	6000	1.95				
4.1	177	224.25	6000	2.3				
2.7	240	347.79	4110	0.80	**WA39HG**			12
3.9	163	233.35	4500	1.25	**WAF39HG**	-	**DRN63MR6**	13
					WF39HG			13
3.6	163	253.03	3000	0.80	**WA29HG**			9.8
4.3	161	213.66	3020	0.80	**WAF29HG**	-	**DRN63MR6**	10
4.5	153	203.19	3150	0.85	**WF29HG**			10
4.9	159	188.47	3480	0.80	**WA29**			9.8
6.2	129	149.43	3570	1.00	**WAF29**	-	**DRN63MR6**	10
7.0	111	131.50	3610	1.15	**WF29**			10
19	22	48.00*	1800	1.15	**W10**			6.8
24	20	39.00*	1800	1.30	**WF10**	-	**DRN63MR6**	7.0
28	18	32.50*	1800	1.55	**WA10**			6.8
33	16	27.50*	1800	1.70	**WAF10**			7.0

P_N = 0.12 kW

n_a min^{-1}	M_a Nm	i	F_{Ra} N	SEW f_B	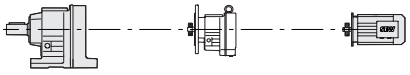			m kg
1.4	625	1016	8000	0.95				
1.6	570	888	8000	1.05				
1.8	480	771	8000	1.25				
2.1	405	674	8000	1.50				
2.4	350	588	8000	1.70				
2.7	325	513	8000	1.85	**WA59**			31
3.1	295	447	8000	2.0	**WAF59**	**R37**	**DRN63MS4**	32
3.5	250	398	8000	2.4	**WF59**			33
4.0	225	350	8000	2.6				
4.4	198	311	8000	3.0				
5.1	168	271	8000	3.6				
5.8	150	240	8000	4.0				

P_N = 0.12 kW

n_a min^{-1}	M_a Nm	i	F_{Ra} N	SEW f_B	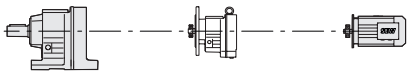			m kg
1.9	495	742	5930	0.80				
2.1	455	674	6000	0.90				
2.3	405	604	6000	1.00				
2.5	360	544	6000	1.10				
2.8	330	494	6000	1.20				
3.1	285	443	6000	1.40	**WA49**			19
3.5	265	400	6000	1.50	**WAF49**	**R17**	**DRN63MS4**	19
3.8	230	362	6000	1.75	**WF49**			20
4.2	220	330	6000	1.80				
4.6	205	300	6000	1.95				
5.1	172	269	6000	2.3				
5.7	163	244	6000	2.5				
6.2	144	222	6000	2.8				
6.1	149	228	4500	1.35	**WA39** **WAF39** **WF39**	**R17**	**DRN63MS4**	14 15 16
3.7	250	375	4050	0.80				
4.1	225	336	4230	0.90	**WA39**			13
4.6	198	298	4420	1.00	**WAF39**	**R17**	**DRN63MS4**	14
5.4	169	257	4500	1.20	**WF39**			15
5.2	172	265	2830	0.75	**WA29**			12
6.6	138	210	3390	0.95	**WAF29**	**R17**	**DRN63MS4**	12
					WF29			13
5.8	151	236	3430	0.85	**WA29** **WAF29** **WF29**	**R17**	**DRN63MS4**	12 12 13
1.3	575	1026.87	8000	1.05				
1.6	570	887.64	8000	1.05				
1.8	500	748.40	8000	1.20				
2.2	405	630.97	8000	1.50	**WA59HG**			19
2.6	355	531.99	8000	1.70	**WAF59HG**	**-**	**DRN63MS4**	21
3.0	335	461.23	8000	1.80	**WF59HG**			22
3.7	275	368.98	8000	2.2				
4.2	240	327.86	8000	2.5				
5.3	195	262.28	8000	3.1				
4.1	265	213.21	8000	2.3				
5.7	188	151.56	8000	3.2	**WA59**			20
6.1	178	142.72	8000	3.4	**WAF59**	**-**	**DRN63M6**	22
6.7	162	129.74	8000	3.7	**WF59**			23
6.5	168	213.21	8000	3.6	**WA59** **WAF59** **WF59**	**-**	**DRN63MS4**	19 21 22

P_N = 0.12 kW

n_a min^{-1}	M_a Nm	i	F_{Ra} N	SEW f_B	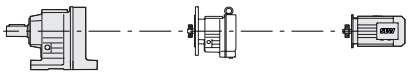			m kg
1.6	425	842.08	6000	0.95				
1.9	370	727.04	6000	1.10				
2.0	385	704.79	6000	1.05				
2.1	440	666.34	6000	0.90				
2.3	330	608.50	6000	1.20				
2.3	405	592.30	6000	1.00				
2.8	330	497.47	6000	1.20	**WA49HG**			15
3.1	305	442.20	6000	1.30	**WAF49HG**	-	**DRN63MS4**	16
3.3	300	418.60	6000	1.35	**WF49HG**			17
3.9	235	356.97	6000	1.70				
4.4	215	317.31	6000	1.85				
4.4	225	312.51	6000	1.80				
4.5	205	308.20	6000	1.95				
5.0	188	273.96	6000	2.1				
6.2	161	224.25	6000	2.5				
6.9	157	200.76	6000	2.5				
9.1	122	151.87	6000	3.3	**WA49**			15
9.2	117	149.88	6000	3.4	**WAF49**	-	**DRN63MS4**	16
11	100	126.43	6000	4.0	**WF49**			17
2.9	235	480.04	3970	0.85				
4.0	225	347.79	4240	0.90	**WA39HG**			11
4.2	163	330.51	4480	1.25	**WAF39HG**	-	**DRN63MS4**	12
5.0	178	275.94	4360	1.10	**WF39HG**			13
5.9	150	233.35	4500	1.35				
4.1	250	210.49	4060	0.80				
5.5	195	157.87	4440	1.00	**WA39**			12
6.2	167	141.23	4530	1.20	**WAF39**	-	**DRN63M6**	13
6.9	156	126.29	4720	1.30	**WF39**			13
7.6	144	114.81	4810	1.40				
8.3	133	105.50	4890	1.50				
6.6	160	210.49	4700	1.25				
8.7	125	157.87	4950	1.60				
9.8	107	141.23	5000	1.85				
11	99	126.29	5130	2.0				
12	91	114.81	5180	2.2				
13	84	105.50	5170	2.4	**WA39**			11
14	74	97.24	5000	2.5	**WAF39**	-	**DRN63MS4**	12
15	73	91.92	4990	2.8	**WF39**			13
16	67	84.74	4840	3.0				
18	61	77.03	4720	3.3				
19	57	70.79	4610	3.5				
19	58	73.53	4700	3.5				
21	53	66.85	4580	3.8				
12	42	75.00*	3000	1.70				
15	39	60.00*	3000	1.80	**W30**			10.0
18	34	48.00*	3000	2.1	**WF30**	-	**DRN63M6**	10
22	31	39.00*	3000	2.3	**WA30**			9.7
27	26	32.50*	3000	2.7	**WAF30**			10.0
32	24	27.50*	3000	2.9				
18	28	75.00*	3000	2.5				
23	26	60.00*	3000	2.7	**W30**			9.1
29	23	48.00*	3000	3.1	**WF30**	-	**DRN63MS4**	9.5
35	20	39.00*	3000	3.4	**WA30**			8.9
42	17	32.50*	3000	4.1	**WAF30**			9.2

P_N = 0.12 kW

n_a min^{-1}	M_a Nm	i	F_{Ra} N	SEW f_B	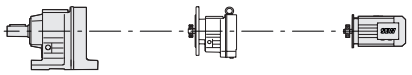			m kg
5.5	152	253.03	3180	0.85	**WA29HG**			9.0
6.5	148	213.66	3240	0.90	**WAF29HG**	-	**DRN63MS4**	9.2
6.8	141	203.19	3350	0.90	**WF29HG**			9.6
7.3	144	188.47	3530	0.90				
9.2	116	149.43	3600	1.10				
10	100	131.50	3640	1.30				
12	93	119.55	3650	1.40				
13	86	108.68	3670	1.50				
14	79	99.87	3680	1.65				
15	71	93.58	3700	1.80				
17	65	83.41	3710	2.0	**WA29**			9.0
18	61	78.02	3720	2.2	**WAF29**	-	**DRN63MS4**	9.2
19	58	74.19	3720	2.3	**WF29**			9.6
20	55	69.68	3730	2.4				
22	49	62.41	3740	2.7				
24	45	56.74	3740	2.9				
26	41	52.14	3750	3.1				
28	39	49.58	3750	3.3				
32	34	43.54	3760	3.8				
12	37	75.00*	2200	1.10				
15	33	60.00*	2200	1.25	**W20**			7.5
18	30	48.00*	2200	1.30	**WF20**	-	**DRN63M6**	7.7
22	28	39.00*	2200	1.45	**WA20**			7.3
27	28	32.50*	2200	1.45	**WAF20**			7.3
32	23	27.50*	2200	1.75				
18	25	75.00*	2200	1.60				
23	22	60.00*	2200	1.80				
29	20	48.00*	2200	1.95				
35	19	39.00*	2200	2.2				
42	18	32.50*	2200	2.2				
50	15	27.50*	2200	2.6	**W20**			6.7
56	14	24.50*	2200	2.9	**WF20**	-	**DRN63MS4**	6.8
71	12	19.50*	2200	3.5	**WA20**			6.4
84	10	16.50*	2200	3.7	**WAF20**			6.4
96	9.6	14.33	2200	4.7				
135	7.2	10.25*	2160	5.0				
168	5.9	8.20*	2020	4.9				
210	4.9	6.57	1890	4.9				
11	98	127.90	2200	0.80				
12	88	119.61	2200	0.90				
14	74	96.28	2200	1.10				
15	66	90.04	2200	1.20				
17	65	82.03	2200	1.25				
19	59	74.57	2200	1.35				
20	53	68.71	2200	1.50	**WA19**			7.5
22	49	61.75	2200	1.65	**WAF19**	-	**DRN63MS4**	7.6
25	45	56.14	2200	1.80	**WF19**			8.2
26	40	52.61	2200	2.0				
29	37	47.28	2200	2.1				
31	35	44.07	2200	2.3				
34	32	40.07	2200	2.5				
41	27	33.74	2200	3.0				
45	24	30.68	2200	3.3				
50	21	27.71	2200	3.2	**WA19**			7.0
66	16	20.86	2200	3.8	**WAF19**	-	**DRN63MS4**	7.2
					WF19			7.7

P_N = 0.12 kW

n_a min^{-1}	M_a Nm	i	F_{Ra} N	SEW f_B	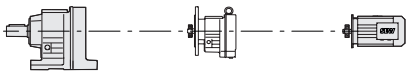			m kg
18	25	75.00*	1800	1.00	**W10** **WF10** **WA10** **WAF10**	-	**DRN63MS4**	6.0
23	22	60.00*	1800	1.15				6.2
29	20	48.00*	1800	1.25				6.0
35	19	39.00*	1800	1.40				6.2
42	17	32.50*	1800	1.65				
50	15	27.50*	1800	1.80				
56	14	24.50*	1800	1.80				
71	12	19.50*	1800	2.5				
84	11	16.50*	1800	2.5				
96	9.5	14.33	1800	2.5				
135	7.3	10.25*	1800	3.8				
168	6	8.20*	1800	3.8				
210	5	6.57	1800	3.8				
18	30	48.00*	1800	0.85	**W10** **WF10** **WA10** **WAF10**	-	**DRN63M6**	6.8
22	28	39.00*	1800	0.95				7.0
27	25	32.50*	1800	1.10				6.8
32	22	27.50*	1800	1.20				7.0

P_N = 0.18 kW

n_a min^{-1}	M_a Nm	i	F_{Ra} N	SEW f_B	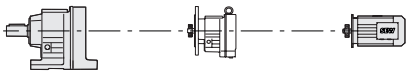			m kg
2.0	655	674	7960	0.90	**WA59** **WAF59** **WF59**	**R37**	**DRN63M4**	31
2.3	565	588	8000	1.05				33
2.7	515	513	8000	1.15				34
3.1	460	447	8000	1.30				
3.5	400	398	8000	1.50				
3.9	355	350	8000	1.70				
4.4	315	311	8000	1.90				
5.1	270	271	8000	2.2				
5.7	240	240	8000	2.5				
3.1	445	443	6000	0.90	**WA49** **WAF49** **WF49**	**R17**	**DRN63M4**	19
3.4	415	400	6000	0.95				20
3.8	365	362	6000	1.10				21
4.2	345	330	6000	1.15				
4.6	315	300	6000	1.25				
5.1	275	269	6000	1.45				
5.6	255	244	6000	1.55				
6.2	225	222	6000	1.75				
1.8	755	748.40	6600	0.80	**WA59HG** **WAF59HG** **WF59HG**	-	**DRN63M4**	20
2.2	610	630.97	7850	1.00				22
3.0	505	461.23	8000	1.20				23
3.7	410	368.98	8000	1.45				
4.2	360	327.86	8000	1.70				
5.2	295	262.28	8000	2.1				
4.3	375	213.21	8000	1.60	**WA59** **WAF59** **WF59**	-	**DRN71MS6**	21
6.0	270	151.56	8000	2.2				22
6.4	255	142.72	8000	2.4				24
7.1	230	129.74	8000	2.6				
7.7	210	118.93	8000	2.8				
8.5	192	107.33	8000	3.1				
9.0	180	101.45	8000	3.3				
9.9	165	92.23	8000	3.7				
11	150	84.54	8000	4.0				

P_N = 0.18 kW

n_a min^{-1}	M_a Nm	i	F_{Ra} N	SEW f_B	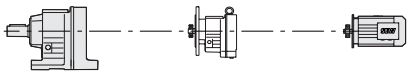			m kg
6.5	255	213.21	8000	2.4	**WA59**	-	**DRN63M4**	20
9.1	180	151.56	8000	3.3	**WAF59**	-	**DRN63M4**	22
9.6	170	142.72	8000	3.5	**WF59**	-	**DRN63M4**	23
11	155	129.74	8000	3.9	**WF59**	-	**DRN63M4**	23
2.8	495	497.47	5500	0.80				
3.1	455	442.20	5910	0.90				
3.3	455	418.60	5940	0.90	**WA49HG**	-	**DRN63M4**	16
4.3	325	317.31	6000	1.20	**WAF49HG**	-	**DRN63M4**	17
4.4	340	312.51	6000	1.20	**WF49HG**	-	**DRN63M4**	18
5.0	280	273.96	6000	1.40				
6.1	240	224.25	6000	1.65				
6.9	235	200.76	6000	1.65				
9.1	183	151.87	6000	2.2				
9.2	177	149.88	6000	2.3				
11	151	126.43	6000	2.6	**WA49**	-	**DRN63M4**	16
12	137	114.94	6000	2.9	**WAF49**	-	**DRN63M4**	17
13	127	105.36	6000	3.1	**WF49**	-	**DRN63M4**	18
15	110	92.86	6000	3.6				
15	113	94.39	6000	3.6				
16	103	85.81	6000	3.9				
5.9	225	233.35	4050	0.90	**WA39HG**	-	**DRN63M4**	12
					WAF39HG	-	**DRN63M4**	13
					WF39HG	-	**DRN63M4**	13
6.5	240	210.49	4120	0.85				
8.7	187	157.87	4500	1.05				
9.7	162	141.23	4580	1.25				
11	149	126.29	4770	1.35				
12	137	114.81	4860	1.45				
13	127	105.50	4870	1.60				
14	111	97.24	4700	1.65				
15	109	91.92	4740	1.85				
16	100	84.74	4590	2.0	**WA39**	-	**DRN63M4**	12
18	92	77.03	4480	2.2	**WAF39**	-	**DRN63M4**	13
19	85	70.79	4390	2.4	**WF39**	-	**DRN63M4**	13
19	87	73.53	4500	2.3				
21	80	66.85	4390	2.5				
22	74	61.43	4300	2.7				
24	69	58.34	4170	2.7				
26	63	53.04	4070	2.9				
28	58	49.34	4030	3.4				
31	54	44.85	3930	3.7				
12	60	75.00*	3000	1.15				
15	55	60.00*	3000	1.25	**W30**	-	**DRN71MS6**	11
19	49	48.00*	3000	1.45	**WF30**	-	**DRN71MS6**	11
23	44	39.00*	3000	1.60	**WA30**	-	**DRN71MS6**	10
28	37	32.50*	3000	1.90	**WAF30**	-	**DRN71MS6**	11
33	35	27.50*	3000	2.0				

P_N = 0.18 kW

n_a min^{-1}	M_a Nm	i	F_{Ra} N	SEW f_B	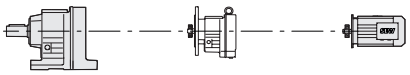			m kg
18	42	75.00*	3000	1.65				
23	39	60.00*	3000	1.80				
29	34	48.00*	3000	2.1				
35	31	39.00*	3000	2.3				
42	26	32.50*	3000	2.7				10.0
50	24	27.50*	3000	2.9	**W30**			10
56	22	24.50*	3000	3.1	**WF30**	-	**DRN63M4**	9.7
71	19	19.50*	3000	3.7	**WA30**			10.0
84	16	16.33	3000	4.2	**WAF30**			
96	15	14.33	3000	4.7				
134	11	10.25*	3000	5.7				
168	9.1	8.20*	3000	7.1				
209	7.7	6.57	2940	8.1				
111	12	24.50*	3000	6.0				
140	9.9	19.50*	3000	7.1				9.1
167	8.5	16.33	3000	8.0	**W30**			9.5
190	7.7	14.33	3000	9.0	**WF30**	-	**DRN63MS2**	8.9
266	5.7	10.25*	2720	11	**WA30**			9.2
332	4.7	8.20*	2540	13	**WAF30**			
415	4	6.57	2360	15				
10	151	131.50	3510	0.85				
12	141	119.55	3530	0.90				
13	130	108.68	3560	1.00				
14	119	99.87	3590	1.10				
15	107	93.58	3620	1.20				
16	98	83.41	3640	1.30				
18	91	78.02	3660	1.45				
19	87	74.19	3670	1.50				9.8
20	83	69.68	3670	1.55	**WA29**			10
22	73	62.41	3690	1.75	**WAF29**	-	**DRN63M4**	10
24	68	56.74	3700	1.90	**WF29**			
26	62	52.14	3710	2.1				
28	59	49.58	3720	2.2				
32	51	43.54	3730	2.5				
36	45	38.73*	3740	2.9				
38	44	36.38	3740	3.0				
44	36	30.99*	3760	3.6				
49	34	28.17	3760	3.9				
15	47	60.00*	2200	0.85				
19	43	48.00*	2200	0.90				
23	40	39.00*	2200	1.00	**W20**			8.1
28	40	32.50*	2200	1.00	**WF20**	-	**DRN71MS6**	8.2
33	33	27.50*	2200	1.20	**WA20**			7.8
37	30	24.50*	2200	1.35	**WAF20**			7.8
47	26	19.50*	2200	1.60				

P_N = 0.18 kW

n_a min^{-1}	M_a Nm	i	F_{Ra} N	SEW f_B	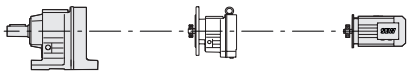			m kg
18	38	75.00*	2200	1.05	**W20 WF20 WA20 WAF20**	-	**DRN63M4**	7.5
23	33	60.00*	2200	1.20				7.7
29	31	48.00*	2200	1.30				7.3
35	28	39.00*	2200	1.45				7.3
42	27	32.50*	2200	1.45				
50	23	27.50*	2200	1.75				
56	21	24.50*	2200	1.90				
71	18	19.50*	2200	2.4				
83	16	16.50*	2200	2.4				
96	14	14.33	2200	3.1				
134	11	10.25*	2110	3.3				
168	8.9	8.20*	1980	3.3				
209	7.4	6.57	1870	3.2				
111	11	24.50*	2200	3.6	**W20 WF20 WA20 WAF20**	-	**DRN63MS2**	6.7
140	9.4	19.50*	2090	4.5				6.8
165	8.2	16.50*	1980	4.7				6.4
190	7.5	14.33	1910	6.0				6.4
266	5.6	10.25*	1720	6.5				
332	4.6	8.20*	1610	6.4				
415	3.8	6.57	1510	6.3				
15	100	90.04	2200	0.80	**WA19 WAF19 WF19**	-	**DRN63M4**	8.3
17	98	82.03	2200	0.80				8.4
18	90	74.57	2200	0.90				9.0
20	79	68.71	2200	1.00				
22	74	61.75	2200	1.10				
24	67	56.14	2200	1.20				
26	61	52.61	2200	1.30				
29	56	47.28	2200	1.40				
31	53	44.07	2200	1.50				
34	48	40.07	2200	1.65				
41	40	33.74	2200	2.0				
45	37	30.68	2200	2.2				
50	32	27.71	2200	2.1	**WA19 WAF19 WF19**	-	**DRN63M4**	7.8
66	24	20.86	2150	2.5				8.0
77	21	17.77	2060	3.0				8.5
85	19	16.16	2010	3.2				
103	16	13.38	1900	3.6				
113	15	12.16	1850	3.8				
29	30	48.00*	1800	0.80	**W10 WF10 WA10 WAF10**	-	**DRN63M4**	6.8
35	28	39.00*	1800	0.95				7.0
42	25	32.50*	1800	1.10				6.8
50	22	27.50*	1800	1.20				7.0
56	21	24.50*	1800	1.20				
71	18	19.50*	1800	1.70				
83	16	16.50*	1800	1.70				
96	14	14.33	1800	1.65				
134	11	10.25*	1800	2.6				
168	9	8.20*	1800	2.6				
209	7.5	6.57	1790	2.5				
190	7.5	14.33	1800	3.2	**W10 WF10 WA10 WAF10**	-	**DRN63MS2**	6.0
266	5.7	10.25*	1650	4.9				6.2
332	4.7	8.20*	1550	4.9				6.0
415	3.9	6.57	1450	4.9				6.2

P_N = 0.25 kW

n_a min^{-1}	M_a Nm	i	F_{Ra} N	SEW f_B	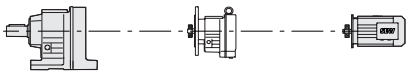			m kg
2.7	715	513	7520	0.85				
3.1	640	447	8000	0.95				
3.5	560	398	8000	1.10	**WA59**			32
4.0	495	350	8000	1.20	**WAF59**	**R37**	**DRN71MS4**	33
4.5	440	311	8000	1.35	**WF59**			35
5.2	380	271	8000	1.60				
5.9	335	240	8000	1.80				
4.3	475	330	6000	0.85				
4.7	435	300	6000	0.90	**WA49**			20
5.2	380	269	6000	1.05	**WAF49**	**R17**	**DRN71MS4**	21
5.8	350	244	6000	1.15	**WF49**			21
6.3	315	222	6000	1.25				
2.6	730	531.99	6840	0.80				
3.1	685	461.23	7240	0.90	**WA59HG**			21
3.8	560	368.98	8000	1.05	**WAF59HG**	**-**	**DRN71MS4**	22
4.3	485	327.86	8000	1.25	**WF59HG**			24
5.4	400	262.28	8000	1.50				
4.3	525	213.21	8000	1.15				
6.0	370	151.56	8000	1.60				
6.4	350	142.72	8000	1.70				
7.1	320	129.74	8000	1.85				
7.7	295	118.93	8000	2.0				
8.5	265	107.33	8000	2.2	**WA59**			22
9.0	250	101.45	8000	2.4	**WAF59**	**-**	**DRN71M6**	23
9.9	230	92.23	8000	2.6	**WF59**			25
11	210	84.54	8000	2.9				
12	182	73.72	8000	3.3				
12	190	76.29	8000	3.2				
14	166	67.02	8000	3.6				
15	152	61.43	8000	4.0				
6.6	345	213.21	8000	1.75				
9.3	245	151.56	8000	2.5				
9.8	230	142.72	8000	2.6				
11	210	129.74	8000	2.9	**WA59**			21
12	192	118.93	8000	3.1	**WAF59**	**-**	**DRN71MS4**	22
13	175	107.33	8000	3.4	**WF59**			24
14	164	101.45	8000	3.7				
15	150	92.23	8000	4.0				
					WA59			20
13	178	213.21	8000	3.4	**WAF59**	**-**	**DRN63M2**	22
					WF59			23
3.9	485	356.97	5620	0.85				
4.4	445	317.31	5950	0.90				
4.5	460	312.51	5870	0.85	**WA49HG**			17
4.6	415	308.20	6000	0.95	**WAF49HG**	**-**	**DRN71MS4**	18
5.1	385	273.96	6000	1.05	**WF49HG**			18
6.3	330	224.25	6000	1.20				

P_N = 0.25 kW

n_a min^{-1}	M_a Nm	i	F_{Ra} N	SEW f_B	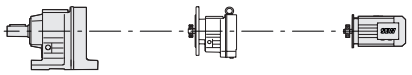			m kg
7.0	320	200.76	6000	1.25				
9.3	250	151.87	6000	1.60				
9.4	240	149.88	6000	1.65				
11	205	126.43	6000	1.95				
12	187	114.94	6000	2.1				
13	172	105.36	6000	2.3	**WA49**			17
15	149	92.86	6000	2.7	**WAF49**	-	**DRN71MS4**	18
15	153	94.39	6000	2.6	**WF49**			18
16	139	85.81	6000	2.9				
18	128	78.66	6000	3.1				
20	115	70.25	6000	3.4				
21	110	67.73	6000	3.6				
23	100	61.58	6000	4.0				
10	220	141.23	4130	0.90				
11	205	126.29	4390	1.00				
12	187	114.81	4510	1.05				
13	173	105.50	4510	1.15				
14	151	97.24	4330	1.25				
15	148	91.92	4420	1.35				
17	136	84.74	4270	1.45				
18	125	77.03	4190	1.60				
19	118	73.53	4240	1.70				
20	116	70.79	4120	1.75	**WA39**			12
21	109	66.85	4150	1.85	**WAF39**	-	**DRN71MS4**	13
23	100	61.43	4070	2.0	**WF39**			14
24	94	58.34	3930	2.0				
26	86	53.04	3850	2.2				
28	79	49.34	3830	2.5				
31	73	44.85	3740	2.7				
34	67	41.22	3670	3.0				
41	55	33.97	3480	3.6				
46	50	30.88	3390	3.9				
50	46	28.38	3320	4.2				
15	77	60.00*	3000	0.90				
19	67	48.00*	3000	1.05				
23	62	39.00*	3000	1.15	**W30**			12
28	52	32.50*	3000	1.35	**WF30**	-	**DRN71M6**	12
33	48	27.50*	3000	1.45	**WA30**			11
37	45	24.50*	3000	1.55	**WAF30**			12
47	39	19.50*	3000	1.80				
19	57	75.00*	3000	1.20				
23	53	60.00*	3000	1.30				
29	46	48.00*	3000	1.50				
36	42	39.00*	3000	1.65				
43	35	32.50*	3000	2.0				
51	33	27.50*	3000	2.1	**W30**			11
57	30	24.50*	3000	2.3	**WF30**	-	**DRN71MS4**	11
72	26	19.50*	3000	2.7	**WA30**			10
86	22	16.33	3000	3.1	**WAF30**			11
98	20	14.33	3000	3.4				
137	15	10.25*	3000	4.2				
171	12	8.20*	3000	5.2				
214	10	6.57	2900	6.0				

P_N = 0.25 kW

n_a min^{-1}	M_a Nm	i	F_{Ra} N	SEW f_B	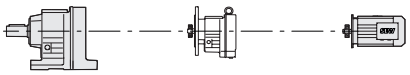			m kg
112	16	24.50*	3000	4.3				
141	14	19.50*	3000	5.2				
169	12	16.33	3000	5.9	**W30**			10.0
192	11	14.33	2980	6.6	**WF30**	-	**DRN63M2**	10
269	7.9	10.25*	2690	8.0	**WA30**			9.7
336	6.4	8.20*	2510	10	**WAF30**			10.0
419	5.4	6.57	2340	11				
14	162	99.87	3470	0.80				
15	146	93.58	3520	0.90				
17	134	83.41	3550	0.95				
18	124	78.02	3580	1.05				
19	118	74.19	3590	1.10				
20	113	69.68	3610	1.15				
23	100	62.41	3640	1.30				
25	92	56.74	3650	1.40	**WA29**			10
27	85	52.14	3670	1.55	**WAF29**	-	**DRN71MS4**	11
28	81	49.58	3680	1.60	**WF29**			11
32	70	43.54	3700	1.85				
36	62	38.73*	3710	2.1				
39	59	36.38	3720	2.2				
45	50	30.99*	3730	2.6				
50	46	28.17	3640	2.8				
54	42	25.89	3560	3.1				
60	37	23.29	3500	3.5	**WA29**			10
66	34	21.17	3410	3.8	**WAF29**	-	**DRN71MS4**	10
					WF29			11
23	45	60.00*	2200	0.90				
29	42	48.00*	2200	0.95				
36	38	39.00*	2200	1.05				
43	37	32.50*	2200	1.10				
51	31	27.50*	2200	1.30	**W20**			8.1
57	28	24.50*	2200	1.40	**WF20**	-	**DRN71MS4**	8.2
72	24	19.50*	2200	1.75	**WA20**			7.8
85	21	16.50*	2200	1.80	**WAF20**			7.8
98	20	14.33	2200	2.3				
137	15	10.25*	2050	2.5				
171	12	8.20*	1930	2.4				
214	10	6.57	1830	2.4				
85	20	32.50*	2200	2.0				
100	17	27.50*	2200	2.4				
112	15	24.50*	2170	2.6				
141	13	19.50*	2030	3.3	**W20**			7.5
167	11	16.50*	1930	3.4	**WF20**	-	**DRN63M2**	7.7
192	10	14.33	1860	4.4	**WA20**			7.3
269	7.7	10.25*	1690	4.7	**WAF20**			7.3
336	6.3	8.20*	1580	4.6				
419	5.3	6.57	1490	4.6				
23	100	61.75	2200	0.80				
25	92	56.14	2200	0.85				
27	82	52.61	2200	0.95				
30	77	47.28	2200	1.05	**WA19**			8.9
32	71	44.07	2200	1.10	**WAF19**	-	**DRN71MS4**	9.0
35	65	40.07	2200	1.20	**WF19**			9.6
42	55	33.74	2200	1.45				
46	50	30.68	2180	1.60				

P_N = 0.25 kW

n_a min^{-1}	M_a Nm	i	F_{Ra} N	SEW f_B	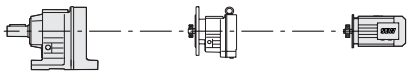			m kg
51	43	27.71	2200	1.55	**WA19** **WAF19** **WF19**	-	**DRN71MS4**	8.4 8.5 9.1
67	33	20.86	2060	1.85				
79	29	17.77	1980	2.2				
87	26	16.16	1930	2.4				
105	22	13.38	1830	2.6				
116	20	12.16	1780	2.8				
137	17	10.24	1690	3.0				
151	15	9.31	1650	3.3				
168	14	8.38	1580	3.0				
184	12	7.62	1540	3.5				
216	11	6.49*	1470	3.0				
238	9.6	5.90	1430	3.5				
51	30	27.50*	1800	0.90	**W10** **WF10** **WA10** **WAF10**	-	**DRN71MS4**	7.4 7.6 7.4 7.6
57	28	24.50*	1800	0.90				
72	24	19.50*	1800	1.25				
85	22	16.50*	1800	1.25				
98	20	14.33	1800	1.25				
137	15	10.25*	1800	1.90				
171	12	8.20*	1800	1.90				
214	10	6.57	1750	1.85				
192	10	14.33	1790	2.3	**W10** **WF10** **WA10** **WAF10**	-	**DRN63M2**	6.8 7.0 6.8 7.0
269	7.9	10.25*	1620	3.6				
336	6.4	8.20*	1520	3.6				
419	5.3	6.57	1430	3.6				

P_N = 0.37 kW

n_a min^{-1}	M_a Nm	i	F_{Ra} N	SEW f_B	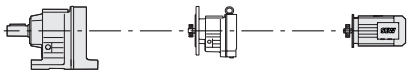			m kg
4.1	740	350	7340	0.80	**WA59** **WAF59** **WF59**	**R37**	**DRN71M4**	33 34 35
4.6	660	311	7930	0.90				
5.2	570	271	8000	1.05				
5.9	505	240	8000	1.20				
6.4	470	222	6000	0.85	**WA49** **WAF49** **WF49**	**R17**	**DRN71M4**	21 22 23
6.2	540	151.56	8000	1.10	**WA59** **WAF59** **WF59**	-	**DRN80MK6**	25 26 27
6.6	510	142.72	8000	1.20				
7.2	465	129.74	8000	1.30				
7.9	425	118.93	8000	1.40				
8.7	385	107.33	8000	1.55				
9.2	365	101.45	8000	1.65				
10	330	92.23	8000	1.80				
11	300	84.54	8000	2.0				
12	275	76.29	8000	2.2				
13	265	73.72	8000	2.3				
14	240	67.02	8000	2.5				
15	220	61.43	8000	2.7				
17	200	55.44	8000	3.0				
18	187	52.40	8000	3.2				
20	171	47.64	8000	3.5				
21	156	43.67	8000	3.7				
24	142	39.41	8000	3.9				
25	132	36.98	8000	3.9				

P_N = 0.37 kW

n_a min^{-1}	M_a Nm	i	F_{Ra} N	SEW f_B	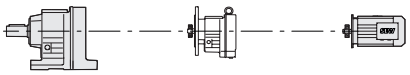			m kg
6.6	505	213.21	8000	1.20				
9.3	360	151.56	8000	1.65				
9.9	340	142.72	8000	1.75				
11	310	129.74	8000	1.95				
12	280	118.93	8000	2.1				
13	260	107.33	8000	2.3	**WA59**			22
14	240	101.45	8000	2.5	**WAF59**	-	**DRN71M4**	23
15	220	92.23	8000	2.7	**WF59**			25
17	200	84.54	8000	3.0				
19	176	73.72	8000	3.4				
19	183	76.29	8000	3.3				
21	160	67.02	8000	3.8				
13	260	213.21	8000	2.3				
19	183	151.56	8000	3.3	**WA59**			21
20	173	142.72	8000	3.5	**WAF59**	-	**DRN71MS2**	22
22	157	129.74	8000	3.8	**WF59**			24
7.1	475	200.76	6000	0.85				
9.3	365	151.87	6000	1.10				
9.4	355	149.88	6000	1.15				
11	300	126.43	6000	1.30				
12	275	114.94	6000	1.45				
13	255	105.36	6000	1.55				
15	220	92.86	6000	1.80				
15	225	94.39	6000	1.75	**WA49**			18
16	205	85.81	6000	1.95	**WAF49**	-	**DRN71M4**	19
18	189	78.66	6000	2.1	**WF49**			20
20	169	70.25	6000	2.3				
21	162	67.73	6000	2.5				
23	147	61.58	6000	2.7				
24	140	58.48	6000	2.8				
27	127	53.16	6000	3.1				
29	117	48.73	6000	3.4				
32	104	43.66	6000	3.8				
15	220	91.92	3920	0.90				
15	220	97.24	3740	0.85				
17	200	84.74	3760	1.00				
18	184	77.03	3720	1.10				
19	174	73.53	3840	1.15				
20	170	70.79	3690	1.20				
21	160	66.85	3780	1.25				
23	148	61.43	3730	1.35	**WA39**			14
24	138	58.34	3560	1.35	**WAF39**	-	**DRN71M4**	14
27	127	53.04	3510	1.45	**WF39**			15
29	117	49.34	3540	1.70				
32	107	44.85	3470	1.85				
34	99	41.22	3410	2.0				
42	80	33.97	3260	2.4				
46	74	30.88	3190	2.7				
50	68	28.38	3130	2.9				
					WA39			13
60	56	23.68*	3080	3.6	**WAF39**	-	**DRN71M4**	14
66	51	21.53	3000	3.9	**WF39**			14

P_N = 0.37 kW

n_a min^{-1}	M_a Nm	i	F_{Ra} N	SEW f_B	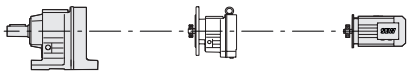			m kg
24	78	60.00*	3000	0.90				
29	68	48.00*	3000	1.05				
36	62	39.00*	3000	1.15				
44	52	32.50*	3000	1.35				
51	48	27.50*	3000	1.45	**W30**			12
58	45	24.50*	3000	1.55	**WF30**	-	**DRN71M4**	12
73	38	19.50*	3000	1.85	**WA30**			11
87	33	16.33	3000	2.1	**WAF30**			12
99	30	14.33	3000	2.3				
138	22	10.25*	3000	2.8				
173	18	8.20*	3000	3.6				
215	15	6.57	2850	4.1				
115	23	24.50*	3000	3.0				
144	20	19.50*	3000	3.6				
172	17	16.33	3000	4.0	**W30**			11
196	15	14.33	2910	4.5	**WF30**	-	**DRN71MS2**	11
274	11	10.25*	2640	5.5	**WA30**			10
343	9.3	8.20*	2470	7.0	**WAF30**			11
428	7.9	6.57	2300	7.9				
23	147	62.41	3520	0.90				
25	135	56.74	3550	0.95				
27	125	52.14	3580	1.05				
29	119	49.58	3590	1.10				
33	102	43.54	3630	1.25	**WA29**			12
37	91	38.73*	3660	1.45	**WAF29**	-	**DRN71M4**	12
39	87	36.38	3670	1.50	**WF29**			12
46	73	30.99*	3530	1.80				
50	67	28.17	3450	1.95				
55	62	25.89	3390	2.1				
61	55	23.29	3370	2.4				
67	51	21.17	3280	2.6				
73	47	19.45	3210	2.8				
87	38	16.25	3040	3.1				
96	35	14.77	2960	3.6				
104	32	13.57	2900	3.8				
122	27	11.56*	2760	3.1	**WA29**			11
135	25	10.51	2680	3.6	**WAF29**	-	**DRN71M4**	12
146	23	9.66	2620	3.9	**WF29**			12
177	19	8.00	2450	3.1				
195	17	7.27	2380	3.6				
212	16	6.68	2320	3.9				
253	13	5.60	2190	3.1				
278	12	5.09	2130	3.5				
303	11	4.68	2080	3.9				
51	46	27.50*	2200	0.85				
58	42	24.50*	2200	0.95				
73	36	19.50*	2200	1.15	**W20**			9.3
86	31	16.50*	2170	1.20	**WF20**	-	**DRN71M4**	9.5
99	29	14.33	2120	1.55	**WA20**			9.1
138	22	10.25*	1960	1.65	**WAF20**			9.1
173	18	8.20*	1860	1.65				
215	15	6.57	1780	1.60				

P_N = 0.37 kW

n_a min^{-1}	M_a Nm	i	F_{Ra} N	SEW f_B	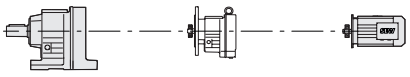			m kg
115	22	24.50*	2060	1.80				
144	19	19.50*	1940	2.2				
170	16	16.50*	1850	2.3	**W20**			8.1
196	15	14.33	1790	3.0	**WF20**	-	**DRN71MS2**	8.2
274	11	10.25*	1630	3.2	**WA20**			7.8
343	9.1	8.20*	1540	3.2	**WAF20**			7.8
428	7.7	6.57	1460	3.1				
35	96	40.07	2040	0.85	**WA19**			10
42	80	33.74	1970	1.00	**WAF19**	-	**DRN71M4**	10
46	74	30.68	1950	1.10	**WF19**			11
51	64	27.71	2030	1.05				
68	48	20.86	1910	1.25				
80	42	17.77	1860	1.50				
88	39	16.16	1820	1.60				
106	32	13.38	1730	1.80				
116	29	12.16	1700	1.90	**WA19**			9.6
138	24	10.24	1610	2.1	**WAF19**	-	**DRN71M4**	9.8
152	22	9.31	1570	2.2	**WF19**			10
169	20	8.38	1510	2.1				
186	18	7.62	1470	2.4				
218	15	6.49*	1400	2.1				
240	14	5.90	1370	2.4				
73	36	19.50*	1800	0.85				
86	32	16.50*	1800	0.85	**W10**			8.6
99	29	14.33	1800	0.85	**WF10**	-	**DRN71M4**	8.8
138	22	10.25*	1800	1.30	**WA10**			8.6
173	18	8.20*	1780	1.30	**WAF10**			8.8
215	15	6.57	1700	1.25				
196	15	14.33	1710	1.60	**W10**			7.4
274	11	10.25*	1570	2.5	**WF10**	-	**DRN71MS2**	7.6
343	9.3	8.20*	1470	2.5	**WA10**			7.4
428	7.7	6.57	1400	2.5	**WAF10**			7.6

P_N = 0.55 kW

n_a min^{-1}	M_a Nm	i	F_{Ra} N	SEW f_B	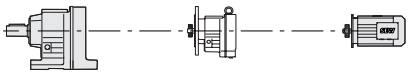			m kg
6.7	740	213.21	7320	0.80				
9.5	525	151.56	8000	1.15				
10	500	142.72	8000	1.20				
11	455	129.74	8000	1.30				
12	415	118.93	8000	1.45				
13	380	107.33	8000	1.60				
14	355	101.45	8000	1.70				
16	325	92.23	8000	1.85				
17	295	84.54	8000	2.0	**WA59**			25
19	255	73.72	8000	2.3	**WAF59**	-	**DRN80MK4**	26
19	270	76.29	8000	2.2	**WF59**			27
21	235	67.02	8000	2.6				
23	215	61.43	8000	2.8				
26	195	55.44	8000	3.1				
27	183	52.40	8000	3.3				
30	167	47.64	8000	3.5				
33	152	43.67	8000	3.8				
36	139	39.41	8000	4.0				

P_N = 0.55 kW

n_a min^{-1}	M_a Nm	i	F_{Ra} N	SEW f_B	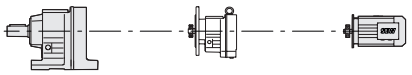			m kg
6.8	735	142.72	7370	0.80				
7.5	670	129.74	7850	0.90				
8.1	610	118.93	8000	1.00				
9.0	560	107.33	8000	1.10				
9.5	520	101.45	8000	1.15				
10	475	92.23	8000	1.25				
11	435	84.54	8000	1.40				
13	380	73.72	8000	1.60				
13	395	76.29	8000	1.50	**WA59**			33
14	345	67.02	8000	1.75	**WAF59**	-	**DRN90SR6**	34
16	315	61.43	8000	1.90	**WF59**			35
17	290	55.44	8000	2.1				
18	270	52.40	8000	2.2				
20	245	47.64	8000	2.4				
22	225	43.67	8000	2.5				
25	205	39.41	8000	2.7				
26	190	36.98	8000	2.7				
29	174	33.62	8000	3.0				
31	159	30.82	8000	3.3				
35	144	27.81	8000	3.5				
13	380	213.21	8000	1.55				
19	270	151.56	8000	2.2				
20	255	142.72	8000	2.3				
22	235	129.74	8000	2.6	**WA59**			22
24	210	118.93	8000	2.8	**WAF59**	-	**DRN71M2**	23
26	193	107.33	8000	3.1	**WF59**			25
28	182	101.45	8000	3.3				
31	166	92.23	8000	3.6				
33	150	84.54	8000	4.0				
39	128	24.89	8000	3.0				
43	117	22.63	8000	3.8	**WA59**			30
60	83	16.09	7340	3.7	**WAF59**	-	**DRN90SR6**	31
85	59	11.35	6610	3.7	**WF59**			33
118	42	8.18	5970	3.7				
11	445	126.43	6000	0.90				
12	400	114.94	6000	1.00				
14	370	105.36	6000	1.05				
15	320	92.86	6000	1.25				
15	330	94.39	6000	1.20				
17	300	85.81	6000	1.35				
18	275	78.66	6000	1.45				
20	250	70.25	6000	1.60				
21	235	67.73	6000	1.70	**WA49**			20
23	215	61.58	6000	1.85	**WAF49**	-	**DRN80MK4**	21
25	205	58.48	6000	1.95	**WF49**			22
27	186	53.16	6000	2.1				
29	171	48.73	6000	2.3				
33	153	43.66	6000	2.6				
36	139	39.69	6000	2.9				
39	128	36.38	6000	3.1				
46	110	31.33	6000	3.5				
50	100	28.48	6000	3.8				

P_N = 0.55 kW

n_a min^{-1}	M_a Nm	i	F_{Ra} N	SEW f_B	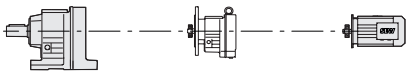			m kg
20	250	70.79	3050	0.80				
21	235	66.85	3230	0.85				
23	215	61.43	3220	0.90				
25	200	58.34	3010	0.90				
27	186	53.04	3000	1.00	**WA39**			16
29	171	49.34	3090	1.15	**WAF39**	-	**DRN80MK4**	17
32	157	44.85	3060	1.25	**WF39**			18
35	145	41.22	3040	1.40				
42	118	33.97	2930	1.65				
46	108	30.88	2890	1.80				
51	100	28.38	2850	1.95				
61	82	23.68*	2880	2.4				
67	75	21.53	2820	2.7				
73	70	19.78	2760	2.9				
90	55	15.89	2600	3.1				
99	51	14.44	2540	3.5				
108	47	13.27	2490	3.7				
131	38	10.94	2360	3.3	**WA39**			15
144	35	9.94	2300	3.6	**WAF39**	-	**DRN80MK4**	16
157	32	9.14	2250	3.9	**WF39**			17
189	26	7.61	2110	3.3				
208	24	6.91	2060	3.3				
226	22	6.35	2010	3.6				
254	20	5.65	1930	3.4				
279	18	5.14	1880	3.3				
304	17	4.72	1840	3.6				
44	76	32.50*	3000	0.90				
52	71	27.50*	3000	1.00				
59	66	24.50*	3000	1.05	**W30**			14
74	56	19.50*	3000	1.25	**WF30**			14
88	48	16.33	3000	1.40	**WA30**	-	**DRN80MK4**	14
100	43	14.33	3000	1.60	**WAF30**			14
140	33	10.25*	3000	1.95				
175	27	8.20*	2940	2.4				
218	22	6.57	2770	2.8				
115	35	24.50*	3000	2.0				
145	29	19.50*	3000	2.4	**W30**			12
173	25	16.33	2930	2.7	**WF30**			12
197	23	14.33	2830	3.1	**WA30**	-	**DRN71M2**	11
276	17	10.25*	2580	3.7	**WAF30**			12
345	14	8.20*	2420	4.7				
430	12	6.57	2270	5.3				
33	150	43.54	3450	0.85				
37	133	38.73*	3330	1.00	**WA29**			14
39	128	36.38	3350	1.00	**WAF29**	-	**DRN80MK4**	14
46	107	30.99*	3230	1.20	**WF29**			15
51	99	28.17	3170	1.30				
55	91	25.89	3130	1.45				

P_N = 0.55 kW

n_a min^{-1}	M_a Nm	i	F_{Ra} N	SEW f_B	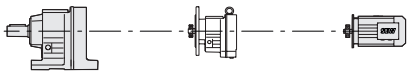			m kg
62	80	23.29	3160	1.60				
68	74	21.17	3090	1.75				
74	68	19.45	3030	1.90				
88	56	16.25	2890	2.1				
97	52	14.77	2820	2.4				
106	48	13.57	2760	2.6				
124	40	11.56*	2640	2.1	**WA29**			14
137	37	10.51	2570	2.5	**WAF29**	-	**DRN80MK4**	14
149	34	9.66	2510	2.6	**WF29**			14
179	28	8.00	2340	2.1				
197	25	7.27	2280	2.4				
215	23	6.68	2230	2.7				
256	19	5.60	2110	2.1				
282	18	5.09	2050	2.4				
307	16	4.68	2010	2.6				
74	53	19.50*	2020	0.80				
87	46	16.50*	1960	0.85	**W20**			11
100	42	14.33	1940	1.05	**WF20**	-	**DRN80MK4**	12
140	32	10.25*	1820	1.15	**WA20**			11
175	26	8.20*	1750	1.10	**WAF20**			11
218	22	6.57	1710	1.10				
115	33	24.50*	1900	1.25				
145	28	19.50*	1810	1.50	**W20**			9.3
171	24	16.50*	1740	1.60	**WF20**			9.5
197	22	14.33	1690	2.0	**WA20**	-	**DRN71M2**	9.1
276	16	10.25*	1560	2.2	**WAF20**			9.1
345	13	8.20*	1480	2.2				
430	11	6.57	1420	2.1				
81	62	17.77	1670	1.00				
89	57	16.16	1650	1.10				
107	47	13.38	1590	1.20				
118	43	12.16	1560	1.30	**WA19**			12
140	36	10.24	1490	1.40	**WAF19**	-	**DRN80MK4**	12
154	33	9.31	1460	1.55	**WF19**			12
171	29	8.38	1400	1.40				
188	27	7.62	1370	1.60				
221	23	6.49*	1310	1.40				
243	21	5.90	1280	1.65				
276	18	10.24	1290	2.7				
303	17	9.31	1260	3.0	**WA19**			9.6
337	15	8.38	1210	2.7	**WAF19**	-	**DRN71M2**	9.8
371	14	7.62	1180	3.1	**WF19**			10
435	12	6.49*	1120	2.8				
479	11	5.90	1090	3.2				

P_N = 0.75 kW

n_a min^{-1}	M_a Nm	i	F_{Ra} N	SEW f_B	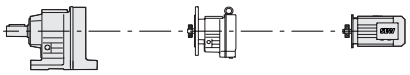			m kg
9.4	720	101.45	7500	0.85				
10	655	92.23	7950	0.90				
11	600	84.54	8000	1.00				
13	520	73.72	8000	1.15				
13	545	76.29	8000	1.10				
14	475	67.02	8000	1.25				
16	435	61.43	8000	1.40				
17	395	55.44	8000	1.50	**WA59**			33
18	370	52.40	8000	1.60	**WAF59**	-	**DRN90S6**	34
20	340	47.64	8000	1.75	**WF59**			35
22	310	43.67	8000	1.85				
24	280	39.41	8000	1.95				
26	260	36.98	8000	2.0				
28	240	33.62	8000	2.2				
31	220	30.82	8000	2.4				
34	199	27.81	8000	2.5				
9.5	715	151.56	7510	0.85				
10	675	142.72	7800	0.90				
11	615	129.74	8000	0.95				
12	560	118.93	8000	1.05				
13	515	107.33	8000	1.15				
14	480	101.45	8000	1.25				
16	440	92.23	8000	1.35				
17	400	84.54	8000	1.50				
19	365	76.29	8000	1.65				
20	350	73.72	8000	1.70	**WA59**			28
21	320	67.02	8000	1.90	**WAF59**	-	**DRN80M4**	29
23	290	61.43	8000	2.1	**WF59**			31
26	265	55.44	8000	2.3				
27	250	52.40	8000	2.4				
30	225	47.64	8000	2.6				
33	205	43.67	8000	2.8				
37	188	39.41	8000	2.9				
39	176	36.98	7860	3.0				
43	160	33.62	7690	3.3				
47	146	30.82	7540	3.6				
52	133	27.81	7340	3.8				
13	515	213.21	8000	1.15				
19	365	151.56	8000	1.65				
20	345	142.72	8000	1.75				
22	315	129.74	8000	1.90				
24	285	118.93	8000	2.1				
27	260	107.33	8000	2.3	**WA59**			28
28	245	101.45	8000	2.4	**WAF59**	-	**DRN80MS2**	29
31	225	92.23	8000	2.7	**WF59**			31
34	205	84.54	8000	3.0				
37	186	76.29	8000	3.2				
39	178	73.72	7980	3.4				
43	162	67.02	7800	3.7				

P_N = 0.75 kW

n_a min^{-1}	M_a Nm	i	F_{Ra} N	SEW f_B	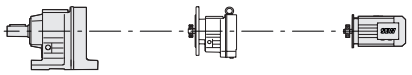			m kg
38	176	24.89	8000	2.2				
42	161	22.63	7830	2.8				
46	147	20.74	7670	3.5				
51	134	18.72	7470	3.6				
59	114	16.09	7150	2.7				
65	104	14.75	6990	3.6	**WA59**			30
72	95	13.31	6800	3.8	**WAF59**	-	**DRN90S6**	31
84	81	11.35	6470	2.7	**WF59**			33
92	74	10.41	6320	3.6				
102	67	9.39	6140	3.6				
117	58	8.18	5860	2.7				
128	53	7.49	5720	3.6				
142	48	6.76	5550	3.6				
58	118	24.89	7230	3.3	**WA59** **WAF59** **WF59**	-	**DRN80M4**	25 27 28
15	450	94.39	6000	0.90				
16	435	92.86	6000	0.90				
17	410	85.81	6000	1.00				
18	375	78.66	6000	1.05				
21	320	67.73	6000	1.25				
21	335	70.25	6000	1.15				
23	295	61.58	6000	1.35				
25	280	58.48	6000	1.40	**WA49**			24
27	255	53.16	6000	1.55	**WAF49**	-	**DRN80M4**	25
30	235	48.73	6000	1.70	**WF49**			25
33	210	43.66	6000	1.95				
36	189	39.69	6000	2.1				
40	174	36.38	6000	2.3				
46	149	31.33	6000	2.5				
51	135	28.48	6000	2.8				
55	125	26.11	6000	3.0				
63	108	22.69	5990	3.2				
70	98	20.63	5850	3.4				
76	90	18.91	5710	3.6				
85	81	16.94	5520	3.2				
93	73	15.40	5380	4.0				
102	68	14.12	5260	4.0	**WA49**			22
118	58	12.16	5010	3.2	**WAF49**	-	**DRN80M4**	23
130	53	11.05	4880	4.0	**WF49**			24
142	48	10.13	4760	4.0				
166	41	8.67	4530	3.2				
183	37	7.88	4410	4.0				
199	35	7.22	4300	4.0				
29	230	49.34	2610	0.85				
32	215	44.85	2620	0.95				
35	197	41.22	2630	1.00	**WA39**			19
42	160	33.97	2580	1.20	**WAF39**	-	**DRN80M4**	20
47	147	30.88	2570	1.35	**WF39**			21
51	136	28.38	2550	1.45				

P_N = 0.75 kW

n_a min^{-1}	M_a Nm	i	F_{Ra} N	SEW f_B	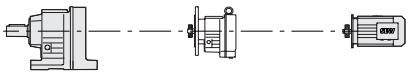			m kg
61	112	23.68*	2660	1.80				
67	103	21.53	2620	1.95				
73	95	19.78	2580	2.1				
91	75	15.89	2450	2.3				
100	69	14.44	2400	2.5				
108	64	13.27	2360	2.8				
132	52	10.94	2250	2.4	**WA39**			19
145	47	9.94	2200	2.7	**WAF39**	-	**DRN80M4**	19
158	44	9.14	2160	2.8	**WF39**			20
189	36	7.61	2020	2.5				
208	33	6.91	1970	2.4				
227	30	6.35	1930	2.6				
255	27	5.65	1850	2.5				
280	24	5.14	1810	2.4				
305	23	4.72	1770	2.6				
59	89	24.50*	3000	0.80				
74	76	19.50*	3000	0.95				
88	65	16.33	3000	1.05	**W30**			17
100	59	14.33	3000	1.15	**WF30**	-	**DRN80M4**	18
140	44	10.25*	3000	1.40	**WA30**			17
176	36	8.20*	2850	1.80	**WAF30**			17
219	31	6.57	2700	2.0				
46	145	30.99*	2900	0.90	**WA29**			17
51	134	28.17	2870	0.95	**WAF29**	-	**DRN80M4**	18
56	123	25.89	2850	1.05	**WF29**			18
62	109	23.29	2940	1.20				
68	101	21.17	2890	1.30				
74	93	19.45	2850	1.40				
89	76	16.25	2730	1.60				
97	70	14.77	2670	1.80				
106	65	13.57	2620	1.90				
125	54	11.56*	2510	1.55	**WA29**			17
137	50	10.51	2460	1.80	**WAF29**	-	**DRN80M4**	17
149	46	9.66	2410	1.95	**WF29**			18
180	37	8.00	2240	1.55				
198	35	7.27	2190	1.80				
216	32	6.68	2150	1.95				
257	26	5.60	2030	1.55				
283	24	5.09	1980	1.80				
308	22	4.68	1940	1.95				
89	77	16.16	1470	0.80				
108	64	13.38	1430	0.90				
118	58	12.16	1420	0.95				
141	49	10.24	1360	1.05	**WA19**			15
155	45	9.31	1350	1.10	**WAF19**	-	**DRN80M4**	15
172	40	8.38	1280	1.05	**WF19**			16
189	36	7.62	1260	1.20				
222	31	6.49*	1210	1.05				
244	28	5.90	1190	1.20				
279	25	10.24	1220	2.0				
307	23	9.31	1200	2.2				
341	20	8.38	1140	2.0	**WA19**			15
375	19	7.62	1120	2.3	**WAF19**	-	**DRN80MS2**	15
440	16	6.49*	1070	2.0	**WF19**			16
484	14	5.90	1040	2.4				

P_N = 1.1 kW

n_a min^{-1}	M_a Nm	i	F_{Ra} N	SEW f_B	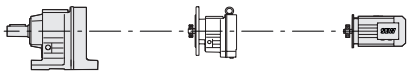			m kg
14	700	67.02	7650	0.85				
16	640	61.43	8000	0.95				
17	580	55.44	8000	1.05				
18	545	52.40	8000	1.10				
20	495	47.64	8000	1.20	**WA59**			37
22	455	43.67	8000	1.25	**WAF59**	-	**DRN90L6**	39
24	415	39.41	7900	1.35	**WF59**			40
26	385	36.98	7690	1.35				
28	350	33.62	7610	1.50				
31	320	30.82	7540	1.60				
34	290	27.81	7410	1.75				
14	700	101.45	7650	0.85				
14	745	107.33	7290	0.80				
16	635	92.23	8000	0.95				
17	580	84.54	8000	1.05				
19	530	76.29	8000	1.15				
20	510	73.72	8000	1.20				
22	465	67.02	8000	1.30				
24	420	61.43	8000	1.40	**WA59**			34
26	385	55.44	7910	1.55	**WAF59**	-	**DRN90S4**	36
28	360	52.40	7780	1.65	**WF59**			37
31	330	47.64	7680	1.80				
33	300	43.67	7590	1.90				
37	275	39.41	7450	2.0				
39	255	36.98	7260	2.0				
43	230	33.62	7140	2.2				
47	210	30.82	7040	2.5				
52	193	27.81	6880	2.6				
38	260	24.89	7490	1.50				
42	235	22.63	7350	1.90				
46	215	20.74	7230	2.4				
51	196	18.72	7060	2.5				
59	168	16.09	6790	1.85				
65	153	14.75	6660	2.4	**WA59**			35
72	140	13.31	6500	2.6	**WAF59**	-	**DRN90L6**	36
84	118	11.35	6200	1.85	**WF59**			38
92	108	10.41	6070	2.4				
102	98	9.39	5910	2.4				
117	85	8.18	5640	1.85				
128	78	7.49	5520	2.4				
142	71	6.76	5370	2.4				
58	172	24.89	6860	2.3				
64	156	22.63	6710	2.8				
70	142	20.74	6580	3.6				
78	130	18.72	6400	3.7				
90	111	16.09	6140	2.8				
99	101	14.75	6010	3.7	**WA59**			32
109	92	13.31	5850	3.9	**WAF59**	-	**DRN90S4**	33
128	78	11.35	5570	2.8	**WF59**			35
140	71	10.41	5450	3.7				
155	65	9.39	5290	3.7				
178	56	8.18	5050	2.8				
194	51	7.49	4930	3.7				
215	47	6.76	4790	3.7				

P_N = 1.1 kW

n_a min^{-1}	M_a Nm	i	F_{Ra} N	SEW f_B	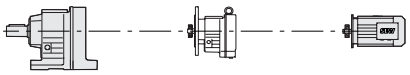			m kg
21	470	67.73	5970	0.85				
21	490	70.25	6000	0.80				
24	425	61.58	6000	0.95				
25	405	58.48	6000	1.00				
27	365	53.16	6000	1.10	**WA49**			30
30	340	48.73	6000	1.15	**WAF49**	-	**DRN90S4**	31
33	300	43.66	6000	1.35	**WF49**			32
37	275	39.69	6000	1.45				
40	255	36.38	6000	1.60				
46	215	31.33	5810	1.75				
51	197	28.48	5730	1.90				
56	181	26.11	5640	2.1				
64	157	22.69	5650	2.2				
71	142	20.63	5530	2.4				
77	131	18.91	5420	2.5				
86	117	16.94	5250	2.2				
94	106	15.40	5130	2.7	**WA49**			29
103	98	14.12	5020	2.7	**WAF49**	-	**DRN90S4**	29
120	84	12.16	4800	2.2	**WF49**			30
132	76	11.05	4690	2.7				
144	70	10.13	4580	2.7				
168	60	8.67	4360	2.2				
185	54	7.88	4260	2.7				
201	50	7.22	4160	2.8				
43	230	33.97	1980	0.85	**WA39**			25
47	215	30.88	2010	0.90	**WAF39**	-	**DRN90S4**	26
51	197	28.38	2040	1.00	**WF39**			27
61	162	23.68*	2300	1.25				
68	149	21.53	2280	1.35				
74	138	19.78	2270	1.45				
92	109	15.89	2170	1.55				
101	100	14.44	2150	1.75				
110	92	13.27	2120	1.90				
133	75	10.94	2050	1.65	**WA39**			24
146	69	9.94	2010	1.85	**WAF39**	-	**DRN90S4**	25
159	64	9.14	1990	1.95	**WF39**			26
191	52	7.61	1860	1.70				
210	48	6.91	1820	1.65				
229	44	6.35	1790	1.80				
257	39	5.65	1720	1.70				
283	36	5.14	1680	1.65				
308	33	4.72	1660	1.80				
376	27	7.61	1620	3.3				
414	25	6.91	1590	3.3	**WA39**			19
450	23	6.35	1550	3.5	**WAF39**	-	**DRN80M2**	19
506	20	5.65	1490	3.3	**WF39**			20
557	18	5.14	1450	3.2				
606	17	4.72	1420	3.5				
175	49	16.33	2660	1.40	**W30**			17
200	45	14.33	2590	1.55	**WF30**	-	**DRN80M2**	18
279	33	10.25*	2410	1.90	**WA30**			17
349	27	8.20*	2280	2.4	**WAF30**			17
435	23	6.57	2160	2.7				

P_N = 1.1 kW

n_a min^{-1}	M_a Nm	i	F_{Ra} N	SEW f_B	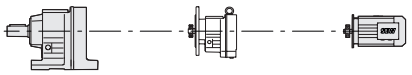			m kg
62	158	23.29	2570	0.80				
69	146	21.17	2540	0.90				
75	135	19.45	2520	0.95				
90	111	16.25	2450	1.10				
99	102	14.77	2410	1.25				
107	94	13.57	2380	1.30				
126	79	11.56*	2300	1.10	**WA29**			23
138	73	10.51	2260	1.25	**WAF29**	-	**DRN90S4**	23
151	67	9.66	2220	1.35	**WF29**			23
182	54	8.00	2060	1.05				
200	50	7.27	2020	1.25				
218	46	6.68	1990	1.35				
260	38	5.60	1880	1.10				
286	35	5.09	1840	1.20				
311	32	4.68	1810	1.35				
358	28	8.00	1800	2.1				
393	26	7.27	1760	2.4				
428	24	6.68	1720	2.6	**WA29**			17
511	20	5.60	1630	2.1	**WAF29**	-	**DRN80M2**	17
562	18	5.09	1590	2.4	**WF29**			18
612	17	4.68	1550	2.6				
137	72	20.86	1200	0.85				
161	63	17.77	1210	1.00				
177	58	16.16	1200	1.10				
214	47	13.38	1170	1.20				
235	43	12.16	1160	1.30	**WA19**			15
279	36	10.24	1110	1.40	**WAF19**	-	**DRN80M2**	15
307	33	9.31	1090	1.50	**WF19**			16
341	30	8.38	1040	1.40				
375	27	7.62	1020	1.60				
441	23	6.49*	980	1.40				
485	21	5.90	960	1.60				

P_N = 1.5 kW

n_a min^{-1}	M_a Nm	i	F_{Ra} N	SEW f_B	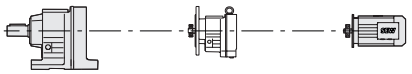			m kg
19	720	76.29	6720	0.85				
20	690	73.72	6950	0.85				
22	630	67.02	6990	0.95				
24	570	61.43	7040	1.05				
26	525	55.44	7000	1.15				
28	490	52.40	6900	1.20	**WA59**			37
31	445	47.64	6870	1.30	**WAF59**	-	**DRN90L4**	39
33	405	43.67	6860	1.40	**WF59**			40
37	370	39.41	6770	1.50				
40	345	36.98	6590	1.50				
43	315	33.62	6530	1.65				
47	285	30.82	6480	1.80				
53	260	27.81	6370	1.95				

P_N = 1.5 kW

n_a min^{-1}	M_a Nm	i	F_{Ra} N	SEW f_B	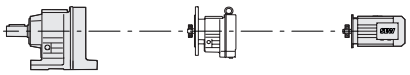			m kg
19	720	151.56	6720	0.85				
20	680	142.72	6920	0.90				
22	615	129.74	6970	0.95				
24	560	118.93	7020	1.05				
27	515	107.33	6970	1.15				
29	480	101.45	6860	1.25				
32	440	92.23	6840	1.35				
34	400	84.54	6830	1.50				
38	365	76.29	6740	1.65				
39	350	73.72	6810	1.70	**WA59**			34
43	320	67.02	6730	1.90	**WAF59**	-	**DRN90S2**	36
47	290	61.43	6670	2.1	**WF59**			37
52	265	55.44	6540	2.3				
55	250	52.40	6430	2.4				
61	225	47.64	6330	2.6				
67	205	43.67	6240	2.8				
74	188	39.41	6110	2.9				
79	176	36.98	5950	3.0				
87	160	33.62	5840	3.3				
94	145	30.82	5750	3.6				
105	133	27.81	5610	3.8				
59	235	24.89	6450	1.65				
65	210	22.63	6330	2.1				
70	193	20.74	6240	2.7				
78	177	18.72	6090	2.7				
91	151	16.09	5860	2.1				
99	137	14.75	5760	2.7	**WA59**			35
110	125	13.31	5610	2.9	**WAF59**	-	**DRN90L4**	36
129	106	11.35	5360	2.0	**WF59**			38
140	97	10.41	5250	2.7				
156	89	9.39	5110	2.7				
179	77	8.18	4880	2.1				
195	70	7.49	4780	2.7				
216	64	6.76	4650	2.7				
117	118	24.89	5560	3.3	**WA59**			32
256	54	11.35	4480	4.0	**WAF59**	-	**DRN90S2**	33
					WF59			35
30	460	48.73	5560	0.85				
33	410	43.66	5440	1.00				
37	370	39.69	5440	1.05	**WA49**			33
40	345	36.38	5410	1.15	**WAF49**	-	**DRN90L4**	34
47	295	31.33	5220	1.30	**WF49**			35
51	265	28.48	5190	1.40				
56	245	26.11	5140	1.55				
64	215	22.69	5260	1.60				
71	194	20.63	5180	1.75				
77	178	18.91	5100	1.85				
86	159	16.94	4940	1.60				
95	144	15.40	4860	2.0	**WA49**			32
103	133	14.12	4770	2.0	**WAF49**	-	**DRN90L4**	32
120	114	12.16	4560	1.60	**WF49**			33
132	104	11.05	4470	2.0				
144	96	10.13	4380	2.0				
169	81	8.67	4180	1.60				
185	74	7.88	4090	2.0				
202	68	7.22	4000	2.0				

P_N = 1.5 kW

n_a min^{-1}	M_a Nm	i	F_{Ra} N	SEW f_B	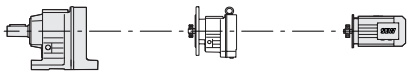			m kg
62	220	23.68*	1880	0.90				
68	200	21.53	1900	1.00				
74	187	19.78	1910	1.05				
92	148	15.89	1870	1.15				
101	136	14.44	1870	1.30				
110	125	13.27	1870	1.40				
134	102	10.94	1820	1.25	**WA39**			28
147	93	9.94	1810	1.35	**WAF39**	-	**DRN90L4**	28
160	86	9.14	1790	1.45	**WF39**			29
192	71	7.61	1670	1.25				
211	65	6.91	1650	1.25				
230	60	6.35	1640	1.35				
258	53	5.65	1560	1.25				
284	48	5.14	1540	1.20				
309	45	4.72	1530	1.30				
318	44	9.14	1630	2.8				
382	36	7.61	1530	2.5				
421	33	6.91	1500	2.4	**WA39**			24
458	30	6.35	1470	2.6	**WAF39**	-	**DRN90S2**	25
514	27	5.65	1410	2.5	**WF39**			26
566	24	5.14	1380	2.4				
616	23	4.72	1350	2.6				

P_N = 2.2 kW

n_a min^{-1}	M_a Nm	i	F_{Ra} N	SEW f_B	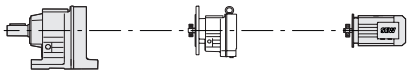			m kg
28	725	52.40	5350	0.85				
30	660	47.64	5460	0.90				
33	600	43.67	5570	0.95				
37	550	39.41	5600	1.00	**WA59**			41
39	510	36.98	5430	1.00	**WAF59**	-	**DRN100LS4**	43
43	465	33.62	5470	1.10	**WF59**			44
47	425	30.82	5520	1.25				
52	385	27.81	5490	1.30				
29	710	101.45	5340	0.85				
32	645	92.23	5460	0.95				
34	585	84.54	5570	1.05				
38	535	76.29	5590	1.10				
39	515	73.72	5750	1.15				
43	470	67.02	5770	1.30				
47	425	61.43	5790	1.40				
52	390	55.44	5740	1.55	**WA59**			37
55	365	52.40	5650	1.65	**WAF59**	-	**DRN90L2**	39
61	335	47.64	5620	1.75	**WF59**			40
67	300	43.67	5600	1.90				
74	275	39.41	5520	2.0				
79	260	36.98	5370	2.0				
86	235	33.62	5310	2.2				
94	215	30.82	5260	2.4				
104	195	27.81	5160	2.6				

P_N = 2.2 kW

n_a min^{-1}	M_a Nm	i	F_{Ra} N	SEW f_B	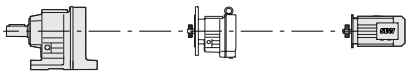			m kg
58	345	24.89	5750	1.10				
64	315	22.63	5690	1.40				
70	285	20.74	5660	1.80				
77	260	18.72	5560	1.85				
90	225	16.09	5400	1.40				
98	205	14.75	5330	1.85	**WA59**			39
109	185	13.31	5230	1.95	**WAF59**	-	**DRN100LS4**	40
128	157	11.35	5010	1.40	**WF59**			42
139	143	10.41	4940	1.85				
154	131	9.39	4820	1.85				
177	113	8.18	4600	1.40				
193	103	7.49	4530	1.85				
214	94	6.76	4420	1.85				
117	174	24.89	5200	2.2				
128	158	22.63	5110	2.8				
140	144	20.74	5020	3.6				
155	131	18.72	4900	3.7				
181	112	16.09	4720	2.8				
197	102	14.75	4630	3.6	**WA59**			35
218	93	13.31	4510	3.8	**WAF59**	-	**DRN90L2**	36
256	79	11.35	4300	2.7	**WF59**			38
279	72	10.41	4210	3.6				
309	66	9.39	4100	3.6				
355	57	8.18	3910	2.8				
388	52	7.49	3830	3.6				
430	47	6.76	3720	3.6				
46	435	31.33	4180	0.85	**WA49**			37
51	395	28.48	4250	0.95	**WAF49**	-	**DRN100LS4**	38
56	365	26.11	4270	1.05	**WF49**			39
64	315	22.69	4610	1.10				
70	285	20.63	4590	1.15				
77	265	18.91	4550	1.25				
86	235	16.94	4430	1.10				
94	215	15.40	4390	1.35				
103	197	14.12	4340	1.35	**WA49**			36
119	169	12.16	4170	1.10	**WAF49**	-	**DRN100LS4**	36
131	153	11.05	4110	1.35	**WF49**			37
143	141	10.13	4050	1.35				
167	120	8.67	3880	1.10				
184	109	7.88	3810	1.35				
201	101	7.22	3750	1.35				

P_N = 3.0 kW

n_a min^{-1}	M_a Nm	i	F_{Ra} N	SEW f_B	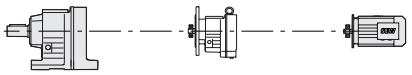			m kg
38	730	76.29	4270	0.80				
39	705	73.72	4530	0.85				
43	640	67.02	4660	0.95				
47	580	61.43	4790	1.05				
52	530	55.44	4820	1.15				
55	500	52.40	4750	1.20	**WA59**			48
61	455	47.64	4800	1.30	**WAF59**	-	**DRN100LM2**	50
66	415	43.67	4860	1.40	**WF59**			51
73	380	39.41	4840	1.45				
78	355	36.98	4690	1.45				
86	320	33.62	4690	1.60				
94	290	30.82	4700	1.80				
104	265	27.81	4660	1.90				
43	635	33.62	4260	0.80	**WA59**			48
47	575	30.82	4410	0.90	**WAF59**	-	**DRN100L4**	50
52	525	27.81	4480	0.95	**WF59**			51
64	425	22.63	4960	1.05				
70	390	20.74	4980	1.35				
78	355	18.72	4950	1.35				
91	305	16.09	4850	1.00				
99	275	14.75	4830	1.35				
109	250	13.31	4770	1.40	**WA59**			46
128	215	11.35	4600	1.00	**WAF59**	-	**DRN100L4**	47
140	195	10.41	4560	1.35	**WF59**			49
155	178	9.39	4480	1.35				
178	154	8.18	4270	1.00				
194	140	7.49	4230	1.35				
215	128	6.76	4140	1.35				
116	240	24.89	4790	1.65				
128	215	22.63	4740	2.1				
140	197	20.74	4690	2.6				
155	180	18.72	4600	2.7				
180	154	16.09	4440	2.0				
196	140	14.75	4380	2.7	**WA59**			46
217	128	13.31	4280	2.8	**WAF59**	-	**DRN100LM2**	47
255	109	11.35	4100	2.0	**WF59**			49
278	99	10.41	4030	2.7				
308	90	9.39	3930	2.7				
354	78	8.18	3750	2.0				
386	71	7.49	3680	2.7				
428	65	6.76	3590	2.7				
71	390	20.63	3900	0.85				
77	360	18.91	3920	0.90				
95	290	15.40	3850	1.00				
103	265	14.12	3840	1.00	**WA49**			43
132	210	11.05	3690	1.00	**WAF49**	-	**DRN100L4**	43
144	192	10.13	3660	1.00	**WF49**			44
185	148	7.88	3490	1.00				
202	137	7.22	3450	1.00				
238	116	12.16	3420	1.60				
262	106	11.05	3370	2.0				
286	97	10.13	3320	2.0	**WA49**			43
334	83	8.67	3160	1.60	**WAF49**	-	**DRN100LM2**	43
367	75	7.88	3110	2.0	**WF49**			44
401	69	7.22	3050	2.0				

P_N = 4 kW

n_a min^{-1}	M_a Nm	i	F_{Ra} N	SEW f_B	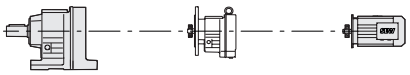			m kg
71	515	20.74	4150	1.00	**WA59 WAF59 WF59**	-	**DRN112M4**	55
78	470	18.72	4180	1.00				57
99	365	14.75	4220	1.00				58
110	335	13.31	4210	1.05				
141	260	10.41	4090	1.00				
156	235	9.39	4050	1.00				
195	186	7.49	3850	1.00				
216	170	6.76	3800	1.00				

P_N = 4.0 kW

n_a min^{-1}	M_a Nm	i	F_{Ra} N	SEW f_B	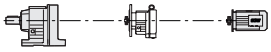			m kg
53	695	55.44	3700	0.85	**WA59**	-	**DRN112 M2**	58
68	540	43.67	3950	1.05	**WAF59**			59
75	495	39.41	4000	1.10	**WF59**			61
96	380	30.82	4010	1.35				
106	350	27.81	4020	1.45				
71	515	20.74	4150	1.00	**WA59**	-	**DRN112 M4**	55
78	470	18.72	4180	1.00	**WAF59**			57
99	365	14.75	4220	1.00	**WF59**			58
110	335	13.31	4210	1.05				
141	260	10.41	4090	1.00				
156	235	9.39	4050	1.00				
195	186	7.49	3850	1.00				
216	170	6.76	3800	1.00				
142	255	20.74	4260	2.0	**WA59**	-	**DRN112 M2**	55
157	235	18.72	4200	2.0	**WAF59**			57
200	183	14.75	4060	2.0	**WF59**			58
222	167	13.31	3990	2.1				
283	129	10.41	3780	2.0				
314	118	9.39	3700	2.0				
393	93	7.49	3480	2.0				
436	85	6.76	3400	2.0				

4.6.3 Selection tables for low output speeds W..R..DRN.. in Nm

$M_{a\,max}$ = 130 Nm

n_a min^{-1}	i	F_{Ra} N	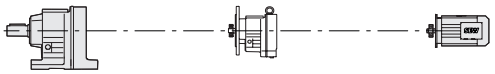			m kg
0.66	2100.14	3450				
0.94	1465.23	3450				
1.3	1042.71	3450				
1.3	1096.44	3450				
1.8	764.97	3450				
2	694.66	3450				
2.5	544.38	3450	**WA29HG**			9
2.9	484.65	3450	**WAF29HG**	**-**	**DRN63MS4**	9.2
3.4	409.26	3450	**WF29HG**			9.6
3.8	362.67	3450				
4	344.90	3450				
4.8	285.53	3450				
5.5	253.03	3450				
6.5	213.66	3450				
6.8	203.19	3450				

$M_{a\,max}$ = 130 Nm

n_a min^{-1}	i	F_{Ra} N	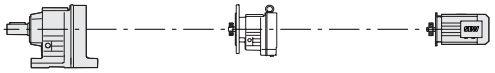			m kg
0.11	12199	3490				
0.13	10518	3490				
0.14	9760	3490				
0.16	8570	3490				
0.18	7650	3490				
0.2	6810	3490				
0.23	6057	3490	**WA29**			13
0.25	5473	3490	**WAF29**	**R17**	**DRN63MS4**	13
0.28	4868	3490	**WF29**			13
0.32	4328	3490				
0.36	3856	3490				
0.45	3078	3490				
0.56	2474	3490				
0.63	2191	3490				
0.78	1767	3490				
0.4	3459	3490				
0.5	2768	3490				
0.7	1968	3490				
0.87	1582	3490				
0.98	1411	3490				
1.1	1260	3490	**WA29**			12
1.2	1128	3490	**WAF29**	**R17**	**DRN63MS4**	12
1.4	1008	3490	**WF29**			13
1.5	904	3490				
1.7	810	3490				
1.9	722	3490				
2.4	576	3490				
2.7	513	3490				

$M_{a\,max}$ = 130 Nm

n_a min^{-1}	i	F_{Ra} N	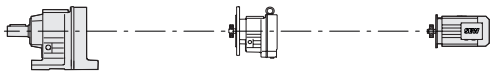			m kg
3	459	3490				
3.3	417	3490				
3.7	369	3490	**WA29**			12
4.2	330	3490	**WAF29**	**R17**	**DRN63MS4**	12
4.7	293	3490	**WF29**			13
5.8	236	3490				

$M_{a\,max}$ = 200 Nm

n_a min^{-1}	i	F_{Ra} N	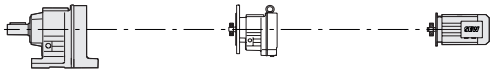			m kg
0.59	2355.20	4410				
0.87	1580.24	4260				
1	1371.28	4410				
1.1	1228.80	4410				
1.3	1088.00	4170				
1.5	920.07	4260	**WA39HG**			11
1.7	824.47	4260	**WAF39HG**	**-**	**DRN63MS4**	12
1.9	715.45	4410	**WF39HG**			13
2.3	597.33	4410				
2.4	567.65	4170				
2.9	480.04	4260				
3.4	400.78	4260				
4	347.79	4410				
4.2	330.51	4170	**WA39HG**			12
5	275.94	4170	**WAF39HG**	**-**	**DRN63M4**	13
5.9	233.35	4260	**WF39HG**			13

$M_{a\,max}$ = 200 Nm

n_a min^{-1}	i	F_{Ra} N	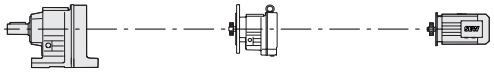			m kg
0.08	17184	4410				
0.09	14816	4410				
0.11	12889	4410				
0.12	11530	4260				
0.13	10358	4410				
0.15	9373	4410				
0.16	8487	4410	**WA39**			15
0.18	7620	4410	**WAF39**	**R17**	**DRN63MS4**	15
0.2	6975	4410	**WF39**			16
0.22	6289	4260				
0.25	5579	4410				
0.28	4983	4260				
0.31	4433	4410				
0.35	3953	4410				
0.4	3488	4410				

$M_{a\,max}$ = 200 Nm

n_a min^{-1}	i	F_{Ra} N	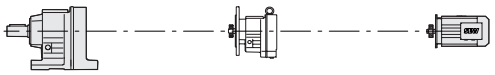			m kg
0.44	3112	4410	**WA39** **WAF39** **WF39**	**R17**	**DRN63MS4**	14 15 16
0.5	2784	4260				
0.55	2501	4410				
0.62	2237	4260				
0.69	2000	4410				
0.77	1786	4260				
0.86	1602	4410				
0.97	1422	4410				
1.2	1136	4410				
1.4	1018	4410				
1.5	909	4410				
1.7	812	4260				
1.9	727	4410				
2.1	649	4410				
2.4	582	4260				
2.7	521	4260				
1.1	1273	4410	**WA39** **WAF39** **WF39**	**R17**	**DRN63MS4**	14 15 15
3	467	4410	**WA39** **WAF39** **WF39**	**R17**	**DRN63MS4**	13 14 15
3.3	424	4410				
3.7	375	4410				
4.1	336	4410				
4.6	298	4410	**WA39** **WAF39** **WF39**	**R17**	**DRN63M4**	14 15 16

$M_{a\,max}$ = 395 Nm

n_a min^{-1}	i	F_{Ra} N	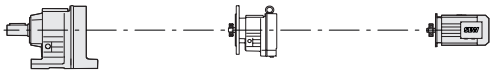			m kg
0.08	16390	6000	**WA49** **WAF49** **WF49**	**R17**	**DRN63MS4**	19 20 20
0.1	13172	6000				
0.1	14131	6000				
0.13	10793	6000				
0.16	8899	6000				
0.17	8165	6000				
0.19	7416	6000				
5.3	269	6000	**WA49** **WAF49** **WF49**	**R17**	**DRN71M4**	21 22 23

$M_{a\,max}$ = 400 Nm

n_a min^{-1}	i	F_{Ra} N	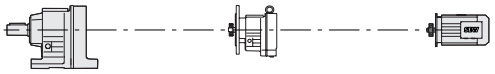			m kg
0.57	2426.20	6000	**WA49HG** **WAF49HG** **WF49HG**	**-**	**DRN63MS4**	15 16 17
0.76	1811.30	6000				
0.88	1571.89	6000				
1.1	1315.60	6000				
1.2	1173.52	6000				
1.4	982.18	6000				
1.6	842.08	6000				
2.1	666.34	6000				
2.3	592.30	6000				

$M_{a\,max}$ = 400 Nm

n_a min^{-1}	i	F_{Ra} N	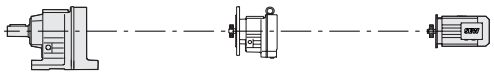			m kg
1.9	727.04	6000	**WA49HG WAF49HG WF49HG**	**-**	**DRN63M4**	16
2	704.79	6000				17
2.3	608.50	6000				18
2.8	497.47	6000				
3.1	442.20	6000				
3.3	418.60	6000				
3.9	356.97	6000	**WA49HG WAF49HG WF49HG**	**-**	**DRN71MS4**	17
4.4	317.31	6000				18
4.5	312.51	6000				18
4.6	308.20	6000				
5.2	273.96	6000	**WA49HG WAF49HG WF49HG**	**-**	**DRN71M4**	18
6.3	224.25	6000				19
						20

$M_{a\,max}$ = 400 Nm

n_a min^{-1}	i	F_{Ra} N	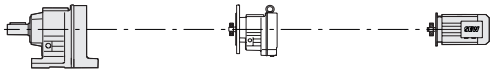			m kg
0.11	12236	6000	**WA49 WAF49 WF49**	**R17**	**DRN63MS4**	19
0.14	9834	6000				20
0.21	6644	6000				20
0.23	6040	6000				
0.25	5413	6000				
0.29	4787	6000				
0.32	4335	6000				
0.36	3884	6000				
0.4	3475	6000				
0.44	3106	6000				
0.48	2847	6000				
0.61	2276	6000				
0.54	2546	6000	**WA49 WAF49 WF49**	**R17**	**DRN63MS4**	19
0.67	2074	6000				19
0.74	1860	6000				20
0.82	1691	6000				
0.92	1495	6000				
1	1335	6000				
1.1	1214	6000				
1.3	1089	6000				
1.4	983	6000				
1.5	901	6000				
1.7	815	6000				
1.9	742	6000				
2.1	674	6000				
2.3	604	6000				
2.5	544	6000	**WA49 WAF49 WF49**	**R17**	**DRN63M4**	19
2.8	494	6000				20
3.1	443	6000				21
3.4	400	6000				
3.9	362	6000	**WA49 WAF49 WF49**	**R17**	**DRN71MS4**	20
4.3	330	6000				21
4.7	300	6000				21
5.8	244	6000	**WA49 WAF49 WF49**	**R17**	**DRN71M4**	21
6.4	222	6000				22
						23

$M_{a\,max}$ = 600 Nm

n_a min^{-1}	i	F_{Ra} N	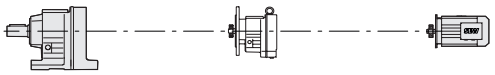			m kg
0.65	2123.38	7920	**WA59HG**			19
0.91	1509.38	7920	**WAF59HG**	-	**DRN63MS4**	21
0.96	1444.60	7920	**WF59HG**			22
1.3	1026.87	7920				
1.6	887.64	7920	**WA59HG**			20
1.8	748.40	7920	**WAF59HG**	-	**DRN63M4**	22
2.2	630.97	7920	**WF59HG**			23
2.6	531.99	7920	**WA59HG**			21
3.1	461.23	7920	**WAF59HG**	-	**DRN71MS4**	22
			WF59HG			24
3.8	368.98	7920	**WA59HG**			22
4.3	327.86	7920	**WAF59HG**	-	**DRN71M4**	23
			WF59HG			25

$M_{a\,max}$ = 600 Nm

n_a min^{-1}	i	F_{Ra} N	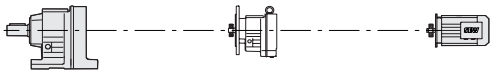			m kg
0.07	19242	8000				
0.08	17649	8000				
0.09	14707	8000				
0.09	16044	8000				
0.11	12955	8000				
0.12	11405	8000				
0.14	10063	8000	**WA59**			31
0.16	8796	8000	**WAF59**	**R37**	**DRN63MS4**	32
0.18	7674	8000	**WF59**			34
0.21	6692	8000				
0.24	5814	8000				
0.27	5032	8000				
0.32	4367	8000				
0.36	3788	8000				
0.42	3311	8000				
0.48	2889	8000				
0.54	2576	8000				
0.61	2259	8000				
0.69	1986	8000	**WA59**			30
0.79	1745	8000	**WAF59**	**R37**	**DRN63MS4**	31
0.9	1526	8000	**WF59**			33
1	1331	8000				
1.2	1167	8000				
1.4	1016	8000				
1.6	888	8000	**WA59**			31
1.8	771	8000	**WAF59**	**R37**	**DRN63M4**	33
2	674	8000	**WF59**			34
2.4	588	8000	**WA59**			31
2.7	513	8000	**WAF59**	**R37**	**DRN71MS4**	33
3.1	447	8000	**WF59**			34
3.6	398	8000	**WA59**			33
4.1	350	8000	**WAF59**	**R37**	**DRN71M4**	34
4.6	311	8000	**WF59**			35
5.3	271	8000	**WA59**			35
6	240	8000	**WAF59**	**R37**	**DRN80MK4**	37
			WF59			38

4.6.4 Dimension sheets W..DRN..

20 001 03 14

W10..

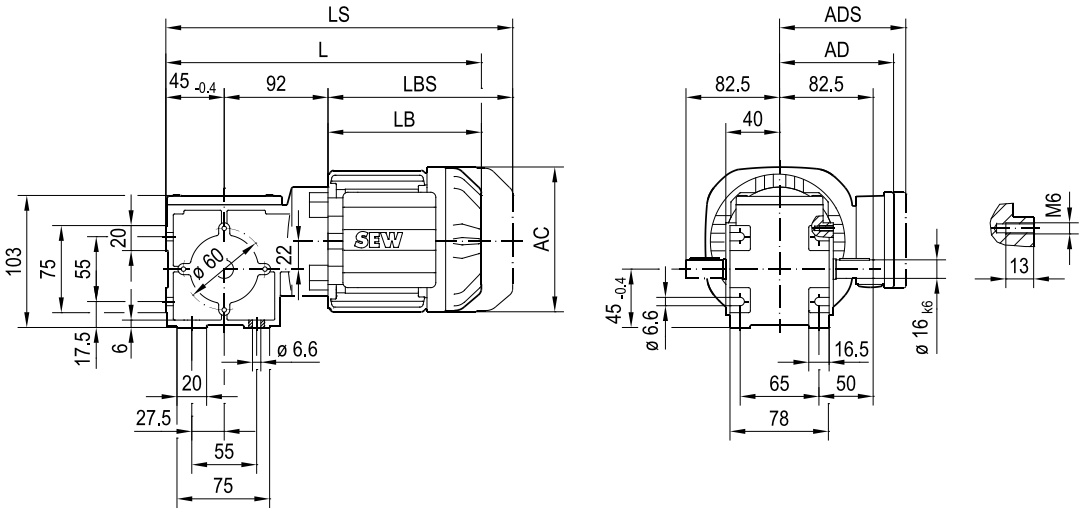

DR2S56..

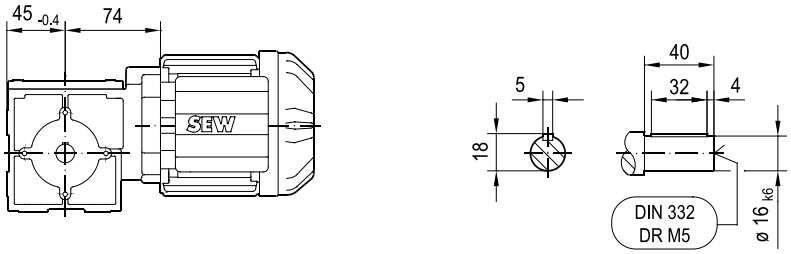

(→ 📖 4.1)	DR2S	DRN						
	56..	63MS	63M	71MS	71M			
AC	109	115	115	139	139			
AD	87	98	98	118	118			
ADS	87	98	98	129	129			
L	255	285	299	301	321			
LS	291	341	355	368	388			
LB	136	148	162	164	184			
LBS	172	204	218	231	251			

WF10..

20 002 03 14

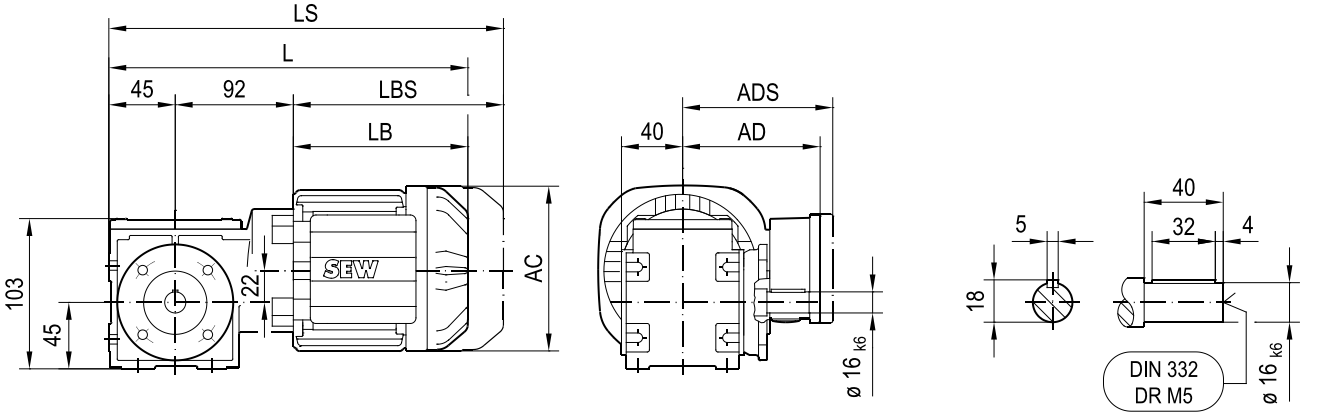

DR2S56..

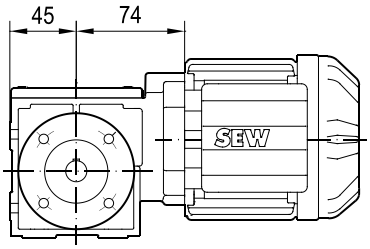

ø 80

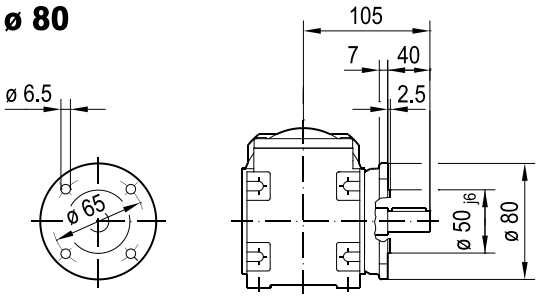

ø 120

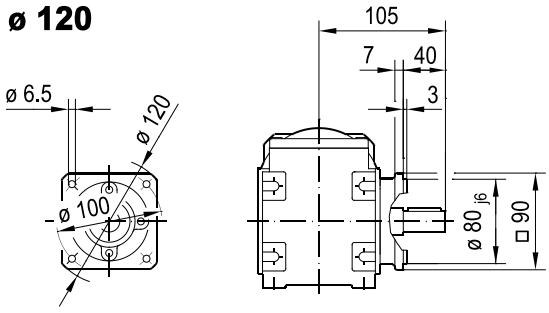

(→ 📖 4.1)	DR2S	DRN						
	56..	63MS	63M	71MS	71M			
AC	109	115	115	139	139			
AD	87	98	98	118	118			
ADS	87	98	98	129	129			
L	255	285	299	301	321			
LS	291	341	355	368	388			
LB	136	148	162	164	184			
LBS	172	204	218	231	251			

WAF10..

20 058 01 17

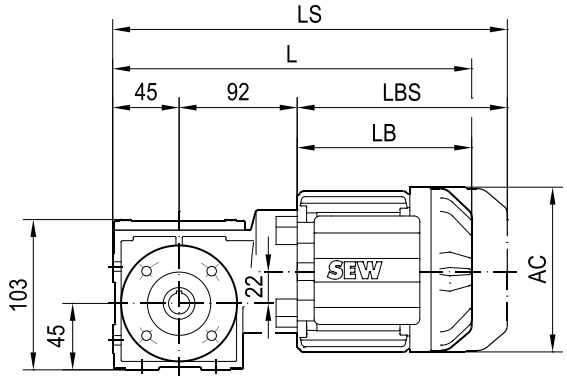

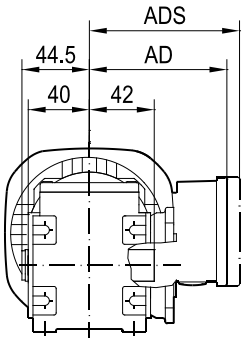

DR2S56..

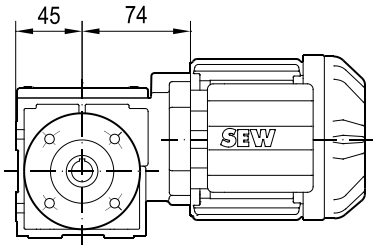

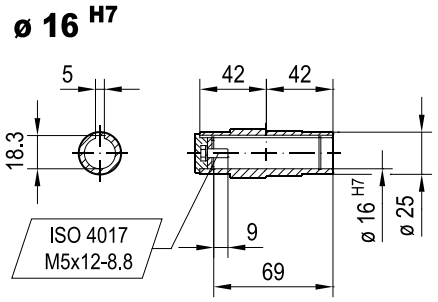

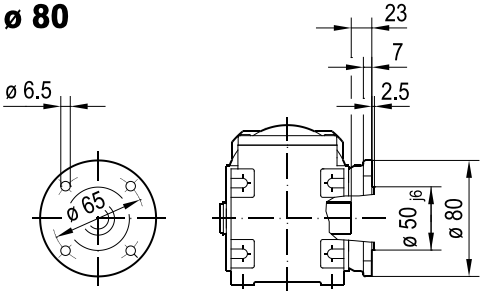

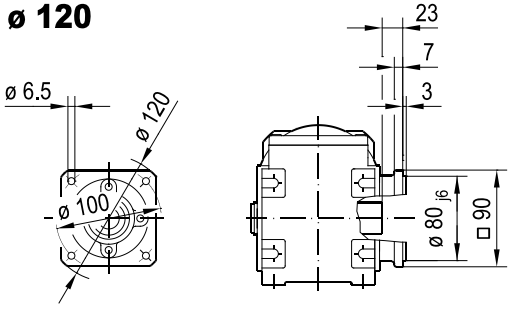

(→ 📖 4.1)	DR2S	DRN						
	56..	63MS	63M	71MS	71M			
AC	109	115	115	139	139			
AD	87	98	98	118	118			
ADS	87	98	98	129	129			
L	255	285	299	301	321			
LS	291	341	355	368	388			
LB	136	148	162	164	184			
LBS	172	204	218	231	251			

20 003 04 14

WA.. /T

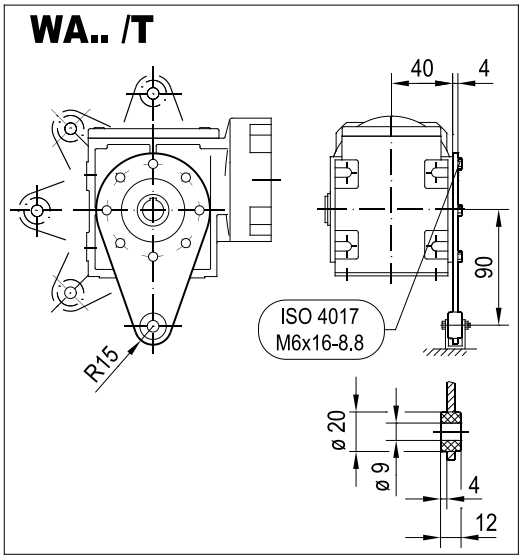

WA10..

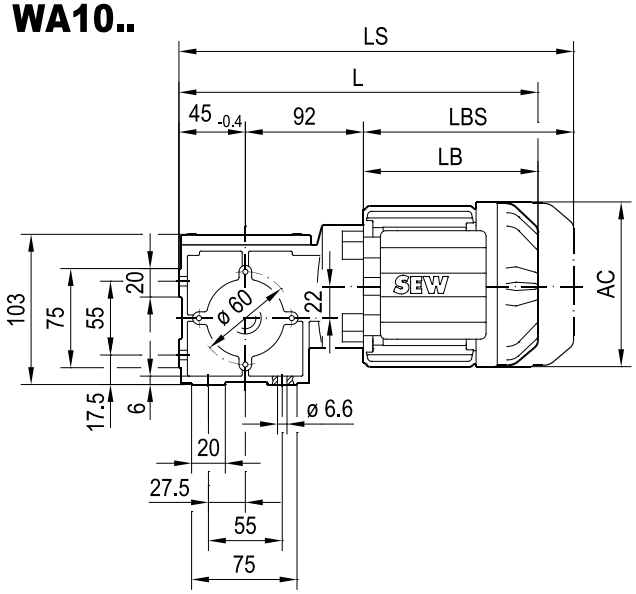

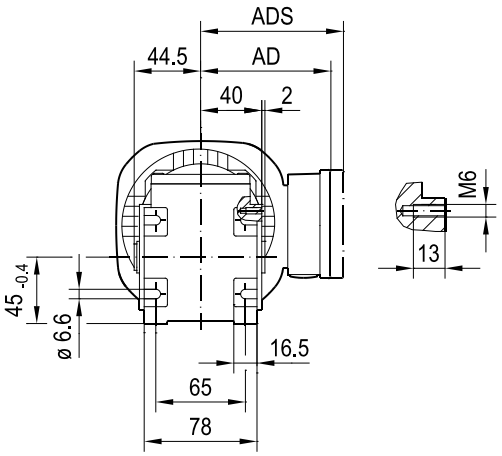

DR2S56..

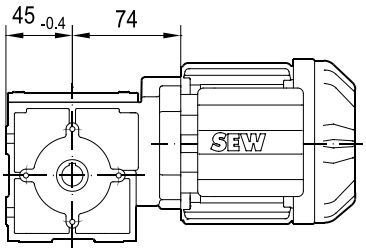

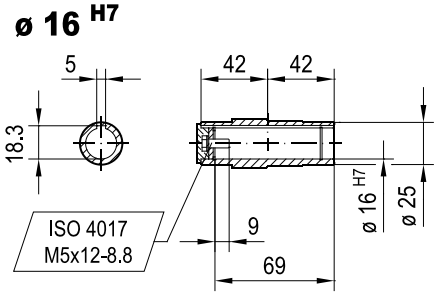

(→ 📖 4.1)	DR2S	DRN						
	56..	63MS	63M	71MS	71M			
AC	109	115	115	139	139			
AD	87	98	98	118	118			
ADS	87	98	98	129	129			
L	255	285	299	301	321			
LS	291	341	355	368	388			
LB	136	148	162	164	184			
LBS	172	204	218	231	251			

20 004 01 14

W20..

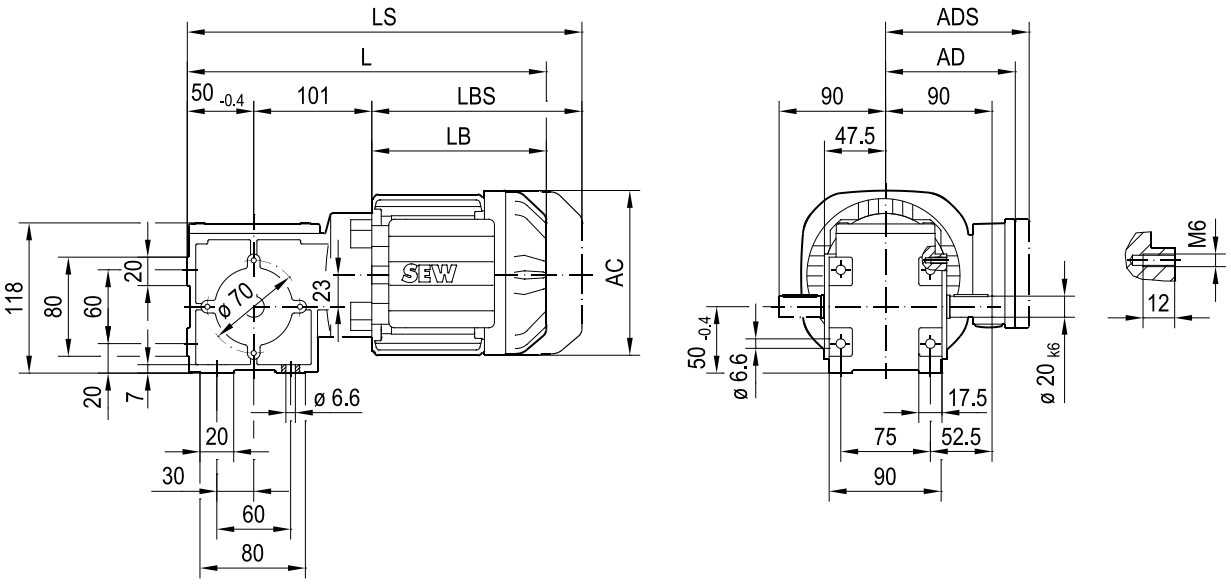

DRN80..

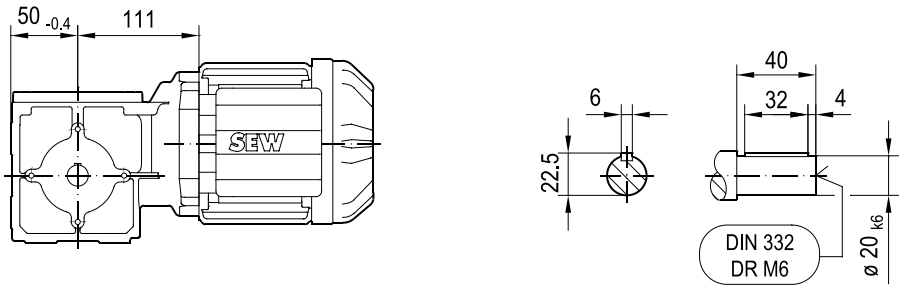

(→ 📖 4.1)	DRN							
	63MS	63M	71MS	71M	80MK	80MS		
AC	115	115	139	139	156	156		
AD	98	98	118	118	128	128		
ADS	98	98	129	129	139	139		
L	299	313	315	335	350	368		
LS	355	369	382	402	431	449		
LB	148	162	164	184	189	207		
LBS	204	218	231	251	270	288		

WF20..

20 005 02 14

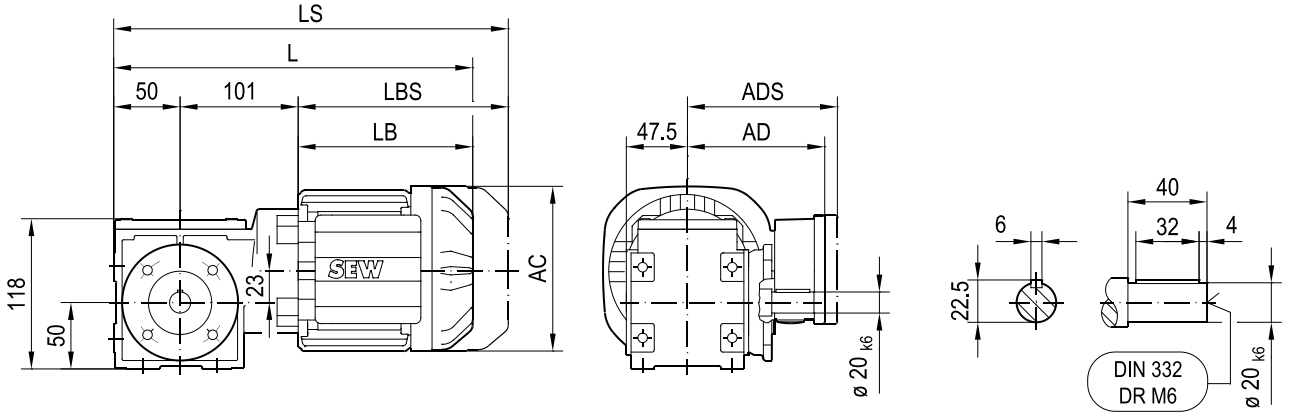

DRN80..

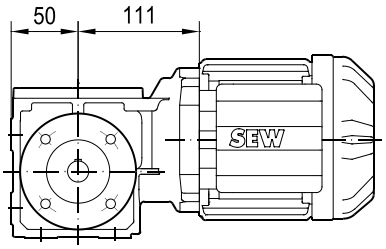

ø 110

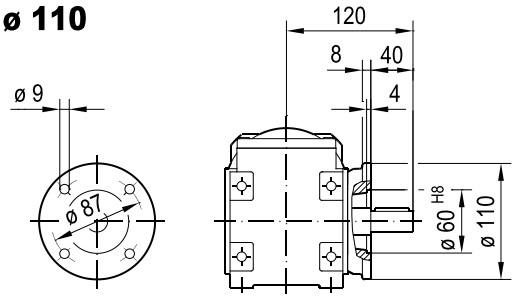

ø 120

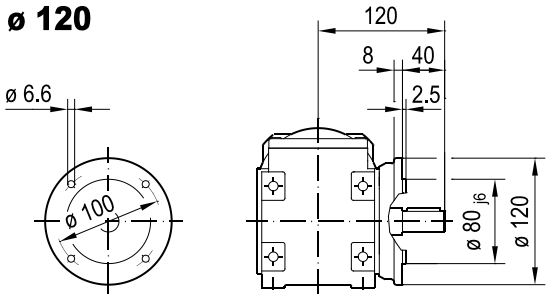

(→ 📖 4.1)	DRN							
	63MS	63M	71MS	71M	80MK	80MS		
AC	115	115	139	139	156	156		
AD	98	98	118	118	128	128		
ADS	98	98	129	129	139	139		
L	299	313	315	335	350	368		
LS	355	369	382	402	431	449		
LB	148	162	164	184	189	207		
LBS	204	218	231	251	270	288		

WAF20..

20 059 00 17

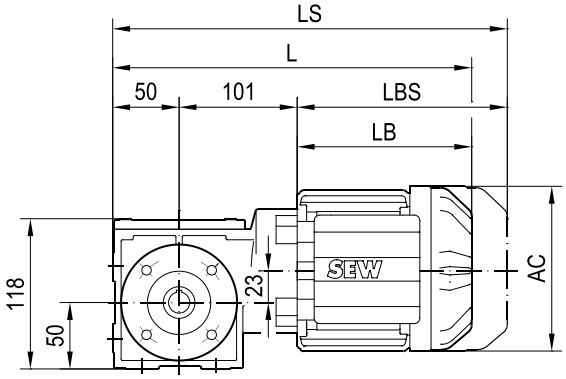

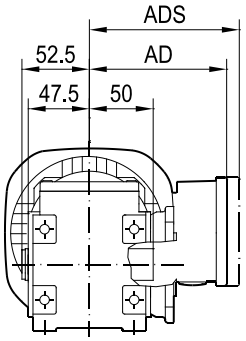

DRN80..

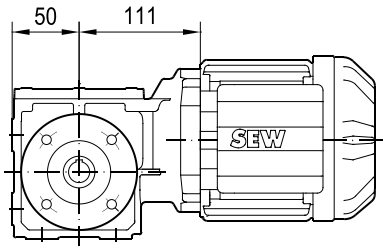

ø 18 H7

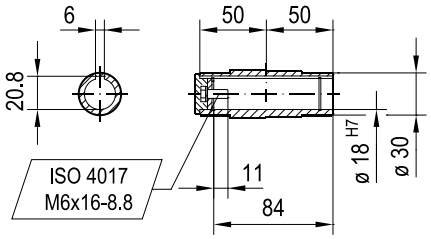

ø 20 H7

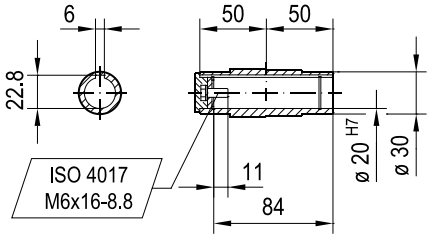

ø 110

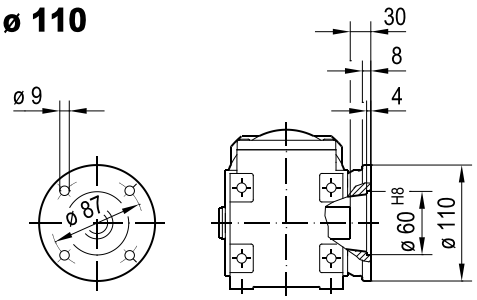

ø 120

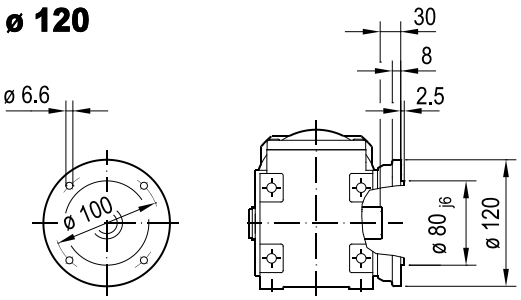

(→ 📖 4.1)	DRN							
	63MS	63M	71MS	71M	80MK	80MS		
AC	115	115	139	139	156	156		
AD	98	98	118	118	128	128		
ADS	98	98	129	129	139	139		
L	299	313	315	335	350	368		
LS	355	369	382	402	431	449		
LB	148	162	164	184	189	207		
LBS	204	218	231	251	270	288		

20 006 02 14

WA.. /T

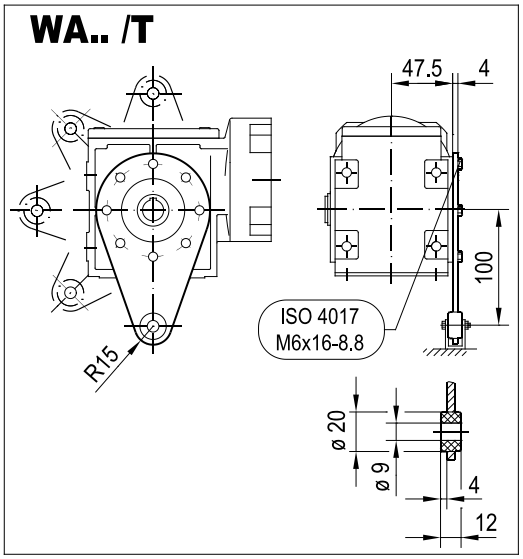

WA20..

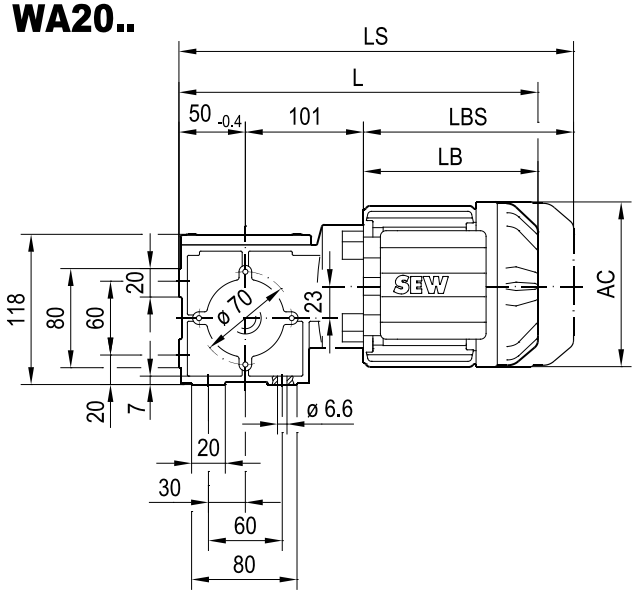

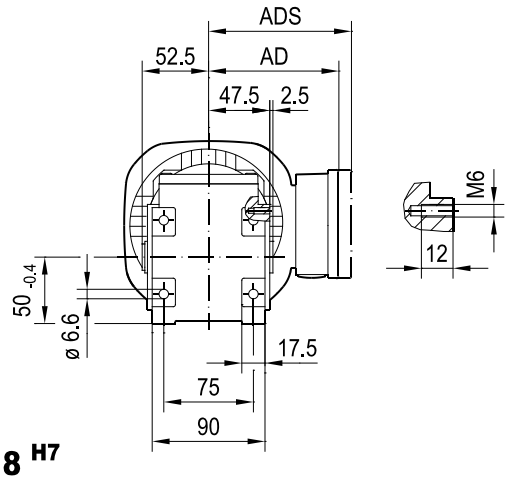

DRN80..

ø 18 H7

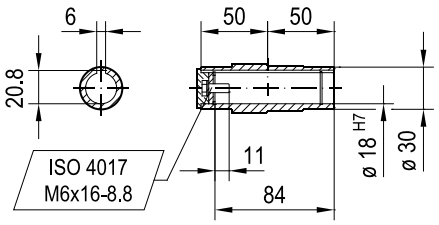

ø 20 H7

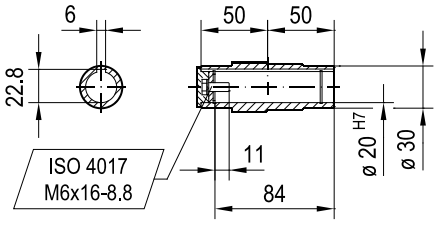

(→ 📖 4.1)	DRN							
	63MS	63M	71MS	71M	80MK	80MS		
AC	115	115	139	139	156	156		
AD	98	98	118	118	128	128		
ADS	98	98	129	129	139	139		
L	299	313	315	335	350	368		
LS	355	369	382	402	431	449		
LB	148	162	164	184	189	207		
LBS	204	218	231	251	270	288		

20 007 00 14

W30..

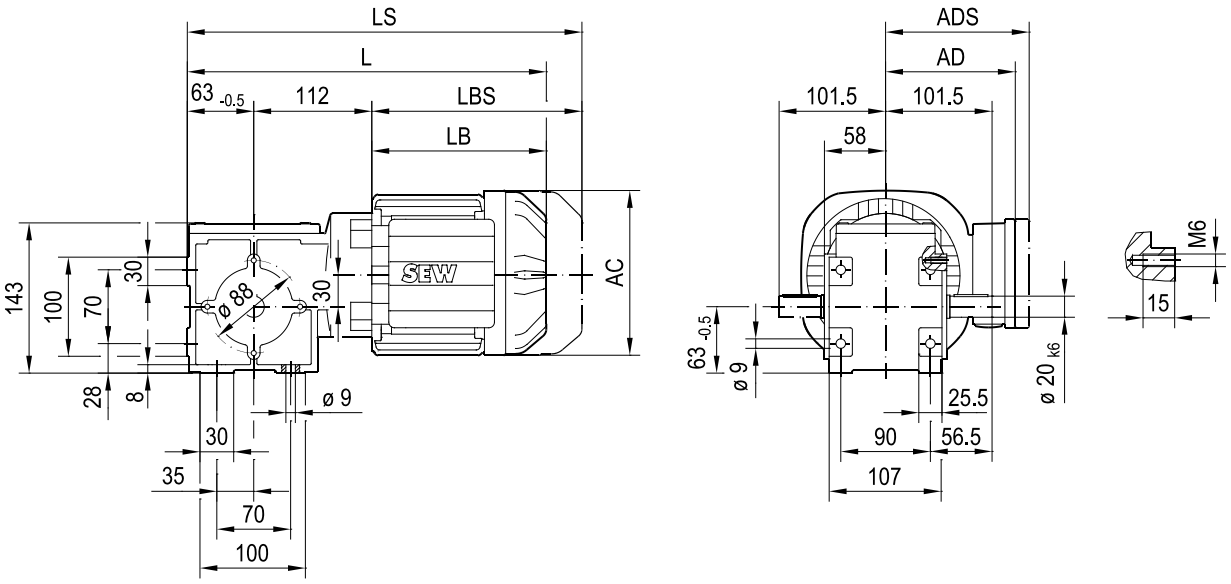

DRN80..

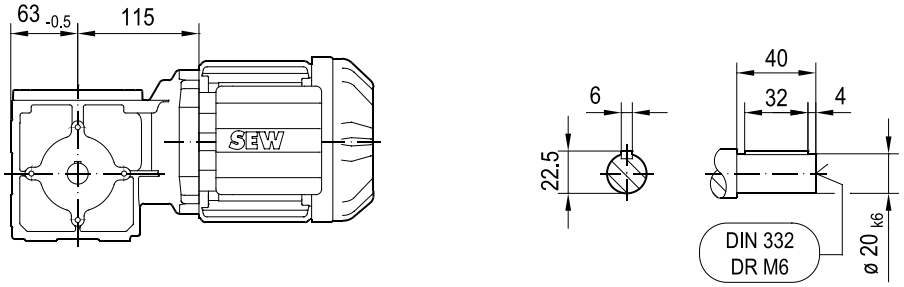

(→ 📖 4.1)	DRN							
	63MS	63M	71MS	71M	80MK	80M		
AC	115	115	139	139	156	156		
AD	98	98	118	118	128	128		
ADS	98	98	129	129	139	139		
L	323	337	339	359	367	413		
LS	379	393	406	426	448	494		
LB	148	162	164	184	189	235		
LBS	204	218	231	251	270	316		

WF30..

20 008 01 14

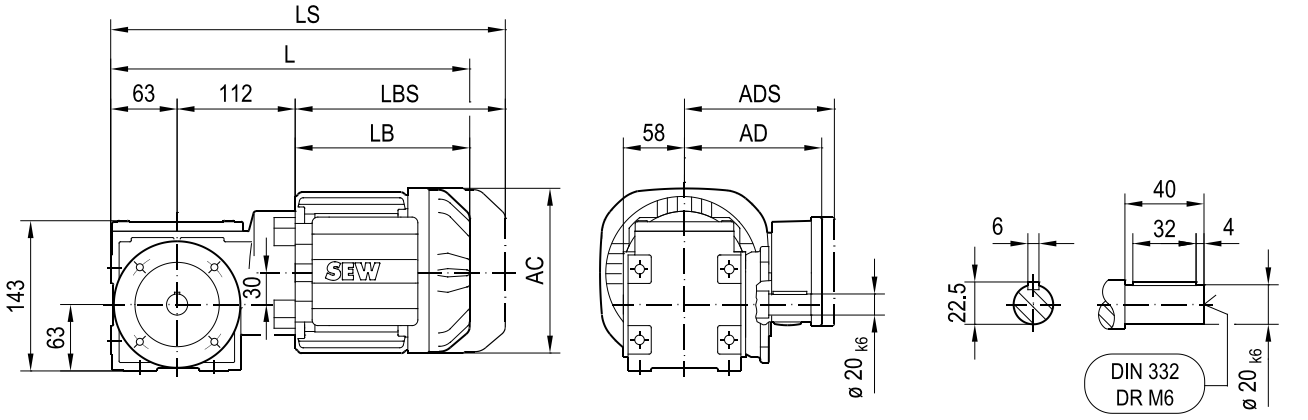

DRN80..

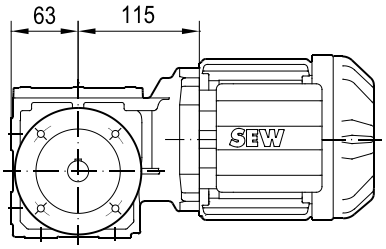

ø 120

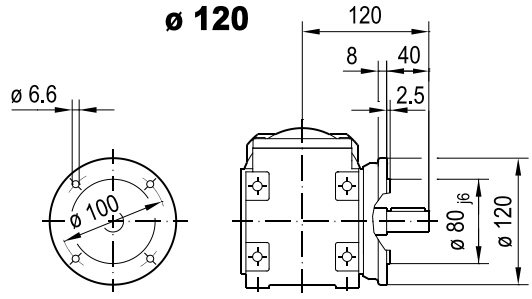

ø 160

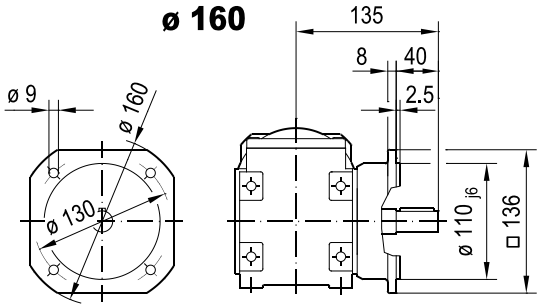

(→ 📖 4.1)	DRN							
	63MS	63M	71MS	71M	80MK	80M		
AC	115	115	139	139	156	156		
AD	98	98	118	118	128	128		
ADS	98	98	129	129	139	139		
L	323	337	339	359	367	413		
LS	379	393	406	426	448	494		
LB	148	162	164	184	189	235		
LBS	204	218	231	251	270	316		

WAF30..

20 009 01 14

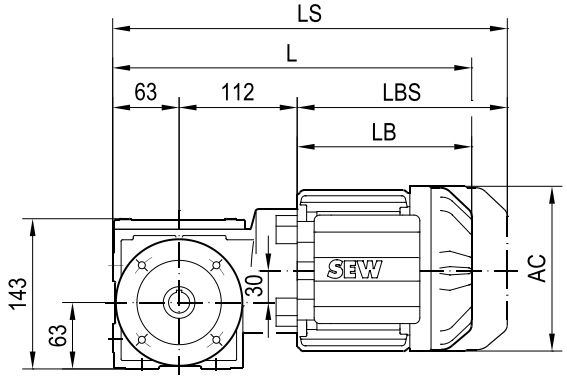

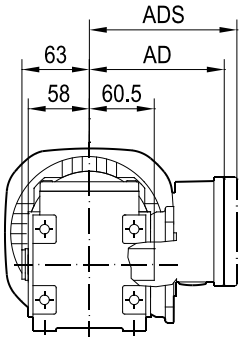

DRN80..

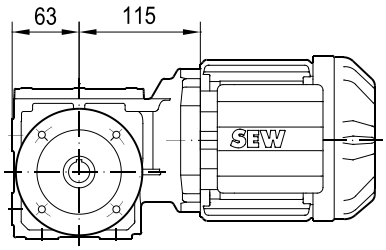

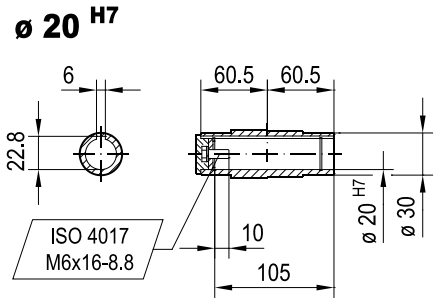

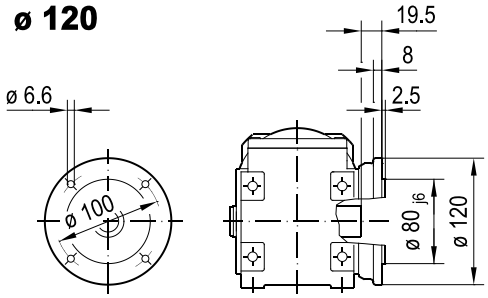

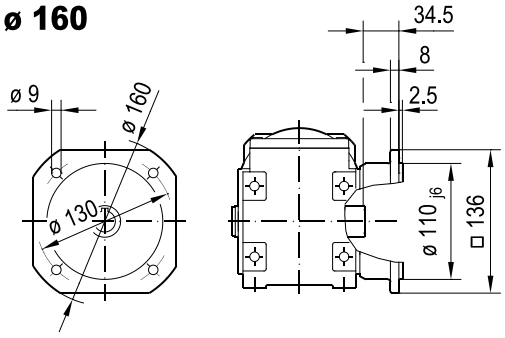

(→ 📖 4.1)	DRN							
	63MS	63M	71MS	71M	80MK	80M		
AC	115	115	139	139	156	156		
AD	98	98	118	118	128	128		
ADS	98	98	129	129	139	139		
L	323	337	339	359	367	413		
LS	379	393	406	426	448	494		
LB	148	162	164	184	189	235		
LBS	204	218	231	251	270	316		

20 010 02 14

WA.. /T

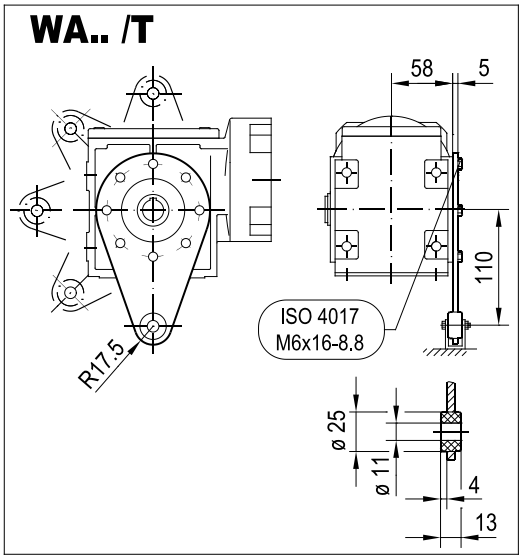

WA30..

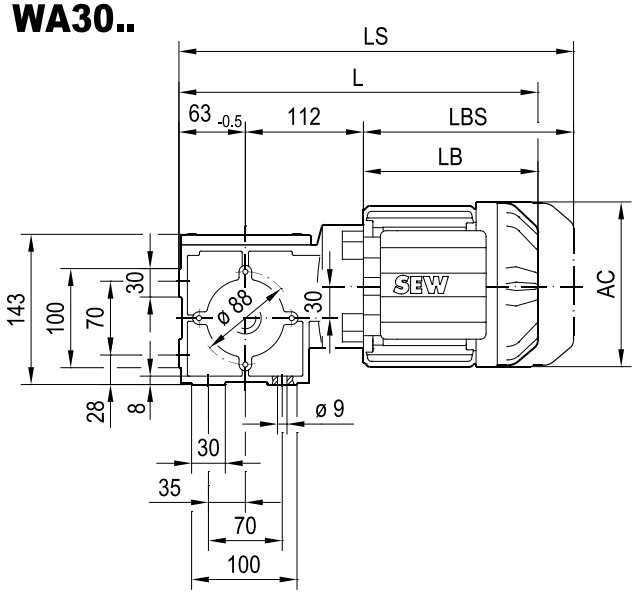

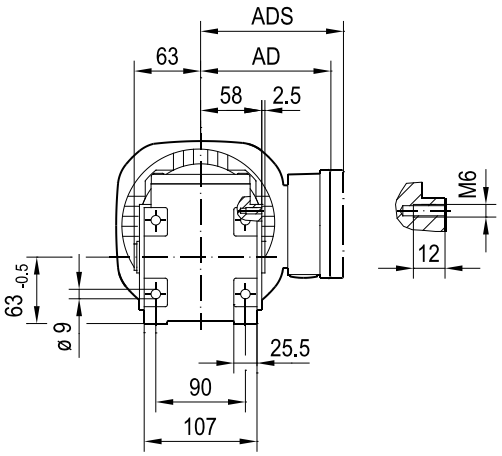

DRN80..

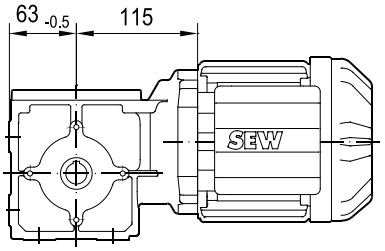

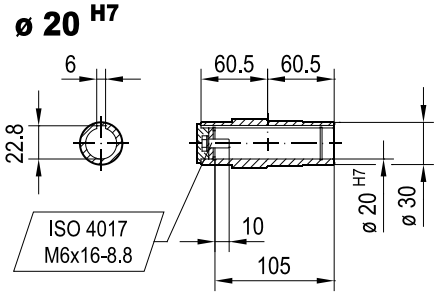

(→ 📖 4.1)	DRN							
	63MS	63M	71MS	71M	80MK	80M		
AC	115	115	139	139	156	156		
AD	98	98	118	118	128	128		
ADS	98	98	129	129	139	139		
L	323	337	339	359	367	413		
LS	379	393	406	426	448	494		
LB	148	162	164	184	189	235		
LBS	204	218	231	251	270	316		

20 002 00 21

WF19..

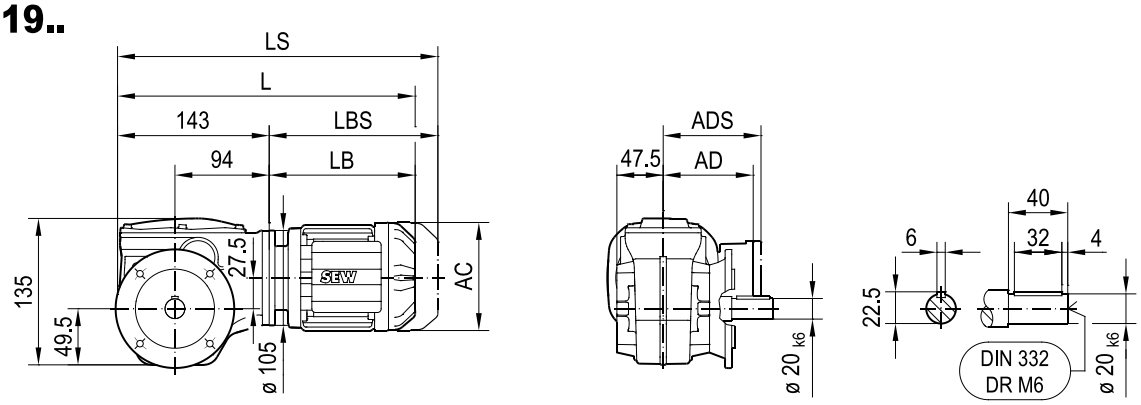

ø 110

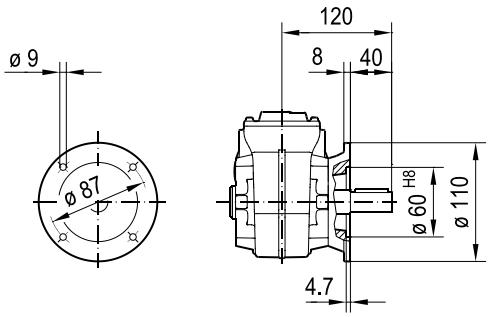

ø 120

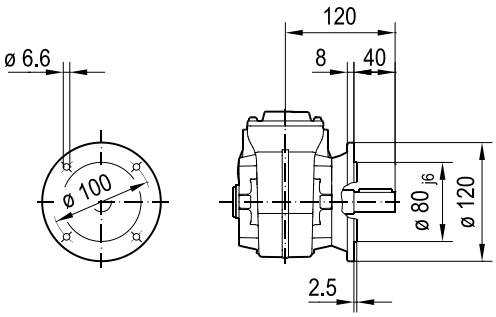

WAF19..

ø 110

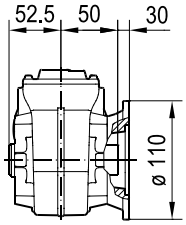

ø 120

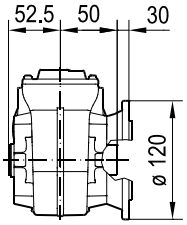

ø 20 H7

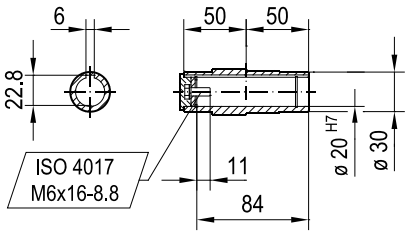

ø 18 H7

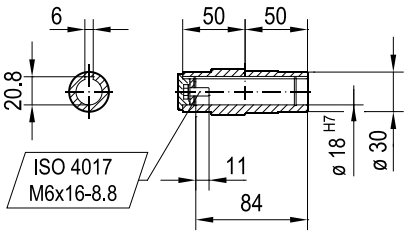

(→ 📖 4.1)	DR2S	DRN						
	56..	63MS	63M	71MS	71M	80MK	80MS	80M
AC	109	115	115	139	139	156	156	156
AD	87	98	98	118	118	128	128	128
ADS	87	98	98	129	129	139	139	139
L	303	333	347	349	369	380	392	426
LS	339	389	403	416	436	461	473	507
LB	160	190	204	206	226	237	249	283
LBS	196	246	260	273	293	318	330	364

20 001 01 21

WA19..

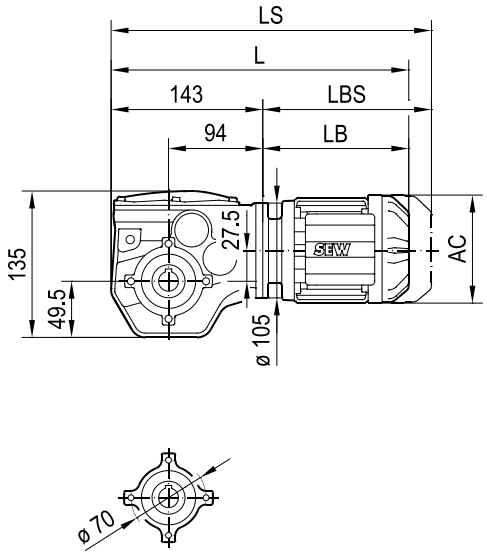

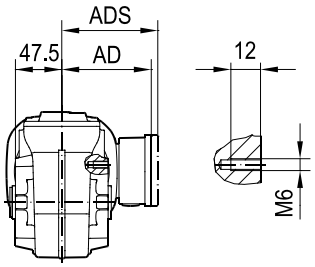

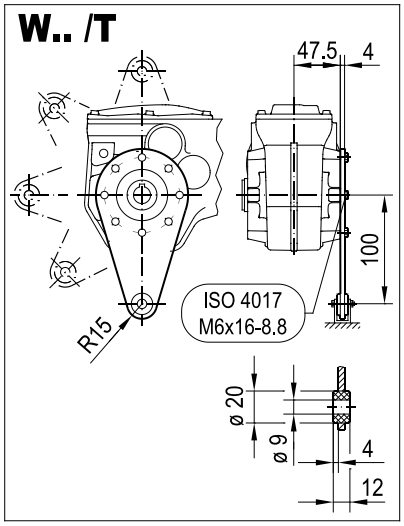

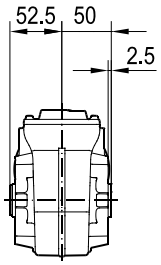

ø 20 H7

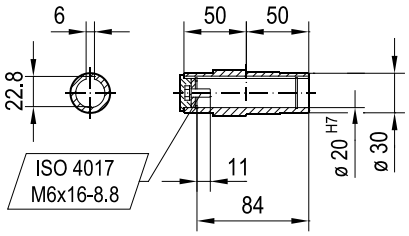

ø 18 H7

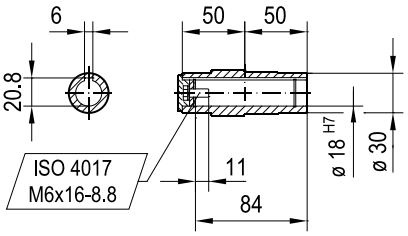

(→ 📖 4.1)	DR2S	DRN						
	56..	63MS	63M	71MS	71M	80MK	80MS	80M
AC	109	115	115	139	139	156	156	156
AD	87	98	98	118	118	128	128	128
ADS	87	98	98	129	129	139	139	139
L	303	333	347	349	369	380	392	426
LS	339	389	403	416	436	461	473	507
LB	160	190	204	206	226	237	249	283
LBS	196	246	260	273	293	318	330	364

20 009 01 20

WF29..

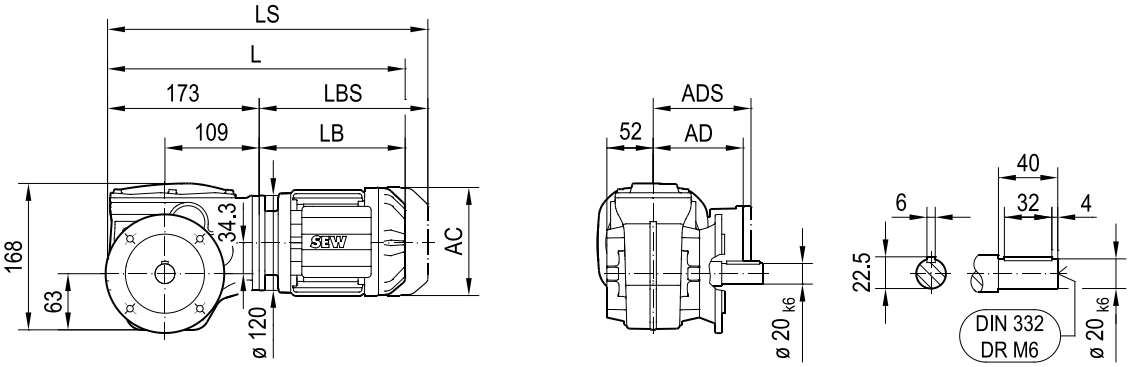

ø 120

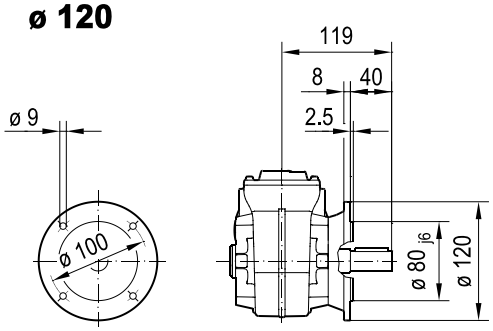

ø 160

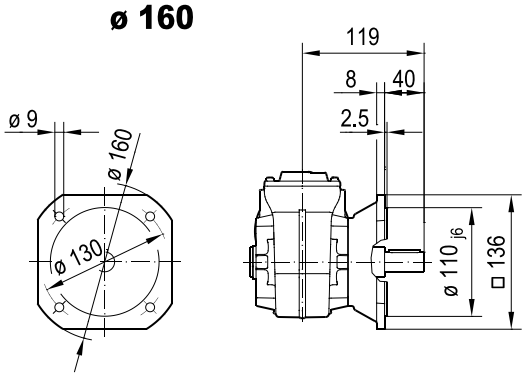

WAF29..

ø 120

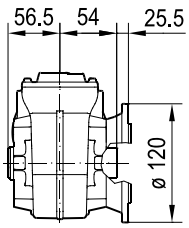

ø 160

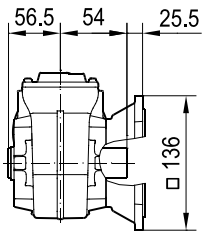

ø 25 H7

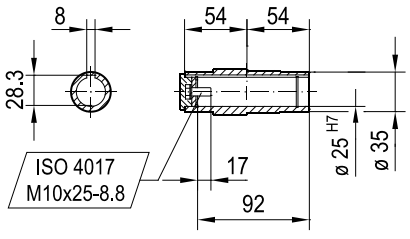

ø 20 H7

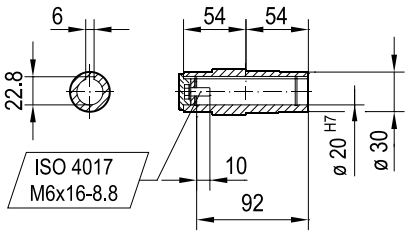

(→ 4.1)	DRN							
	63MS	63M	71MS	71M	80MK	80MS	80M	90S
AC	115	115	139	139	156	156	156	179
AD	98	98	118	118	128	128	128	140
ADS	98	98	129	129	139	139	139	150
L	363	377	379	399	410	427	456	457
LS	419	433	446	466	491	508	537	551
LB	190	204	206	226	237	254	283	284
LBS	246	260	273	293	318	335	364	378

20 010 02 20

WHF29..

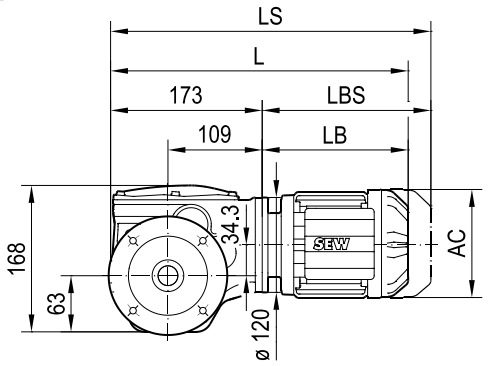

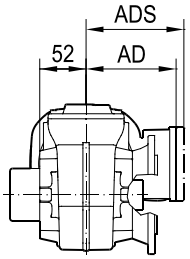

ø 120

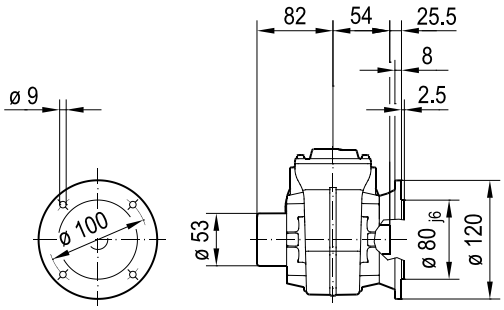

ø 160

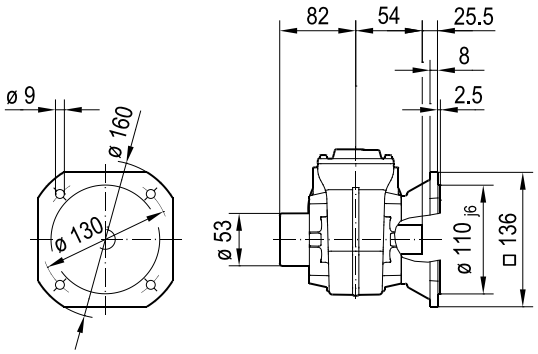

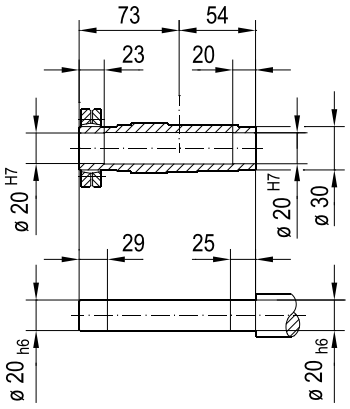

(→ 4.1)	DRN							
	63MS	63M	71MS	71M	80MK	80MS	80M	90S
AC	115	115	139	139	156	156	156	179
AD	98	98	118	118	128	128	128	140
ADS	98	98	129	129	139	139	139	150
L	363	377	379	399	410	427	456	457
LS	419	433	446	466	491	508	537	551
LB	190	204	206	226	237	254	283	284
LBS	246	260	273	293	318	335	364	378

20 011 04 20

WA29..

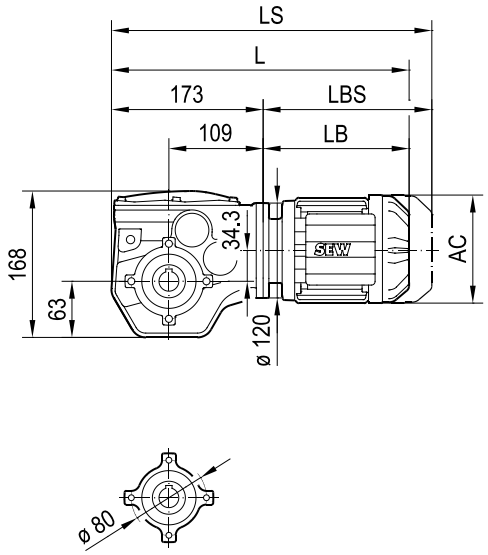

W.. /T

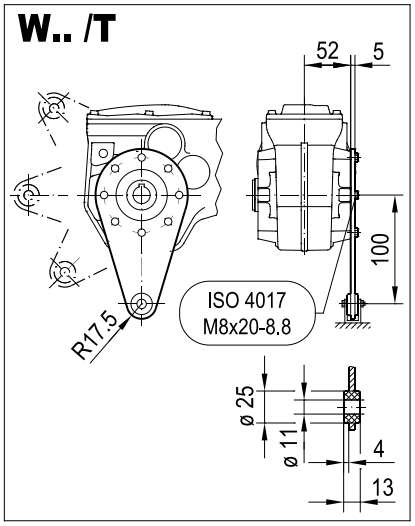

WA29..

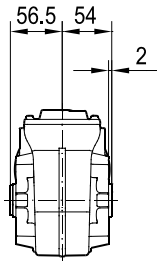

WH29..

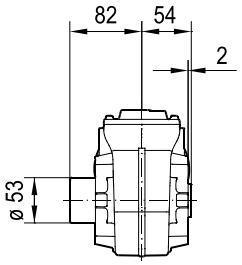

ø 25 H7

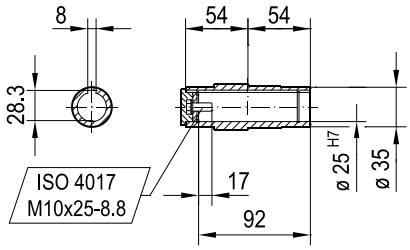

ø 20 H7

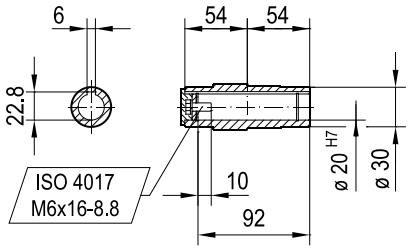

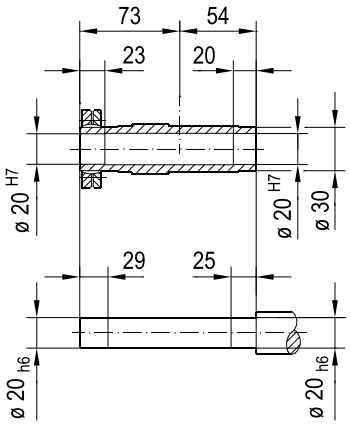

(→ 4.1)	DRN							
	63MS	63M	71MS	71M	80MK	80MS	80M	90S
AC	115	115	139	139	156	156	156	179
AD	98	98	118	118	128	128	128	140
ADS	98	98	129	129	139	139	139	150
L	363	377	379	399	410	427	456	457
LS	419	433	446	466	491	508	537	551
LB	190	204	206	226	237	254	283	284
LBS	246	260	273	293	318	335	364	378

20 012 03 20

WT29..

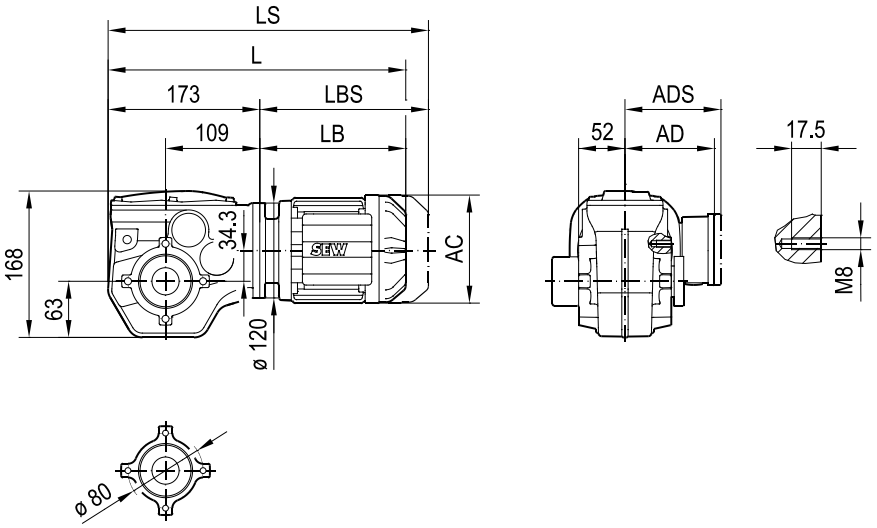

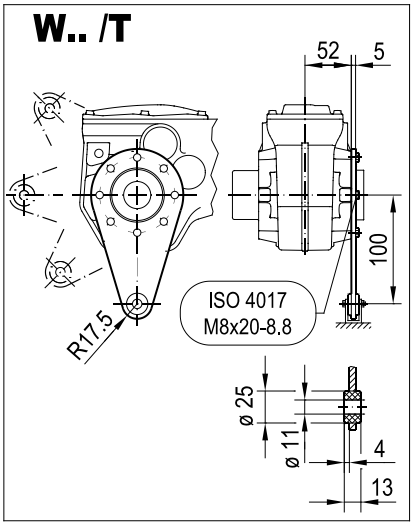

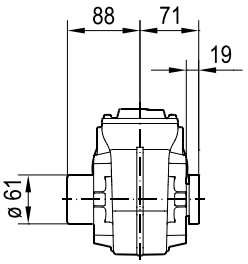

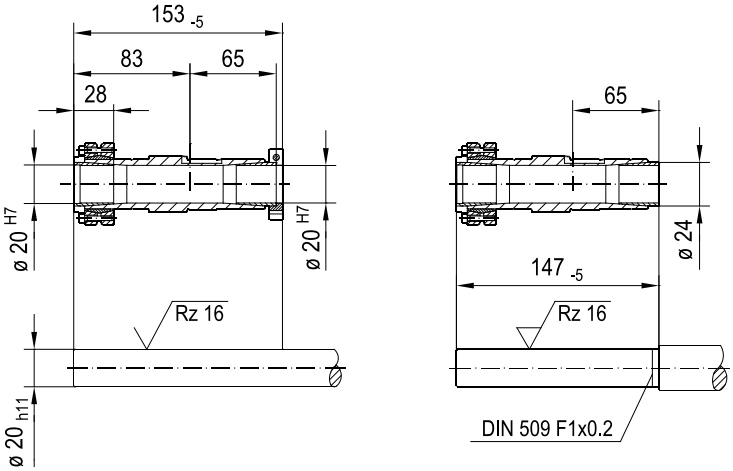

(→ 📖 4.1)	DRN							
	63MS	63M	71MS	71M	80MK	80MS	80M	90S
AC	115	115	139	139	156	156	156	179
AD	98	98	118	118	128	128	128	140
ADS	98	98	129	129	139	139	139	150
L	363	377	379	399	410	427	456	457
LS	419	433	446	466	491	508	537	551
LB	190	204	206	226	237	254	283	284
LBS	246	260	273	293	318	335	364	378

20 014 01 20

WF39..

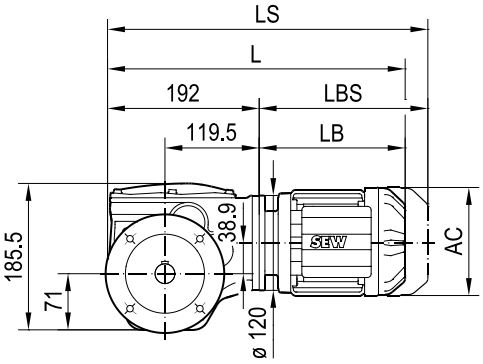

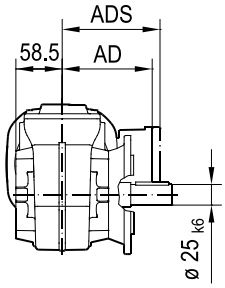

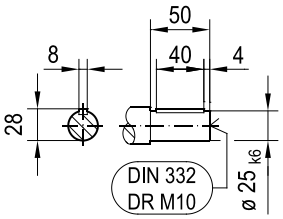

ø 160

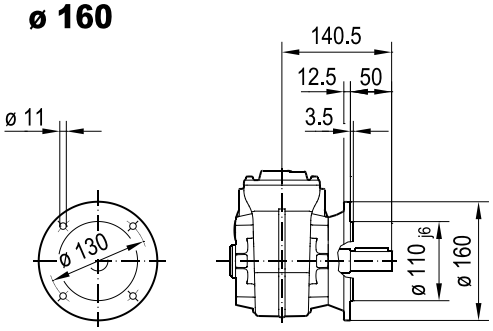

ø 200

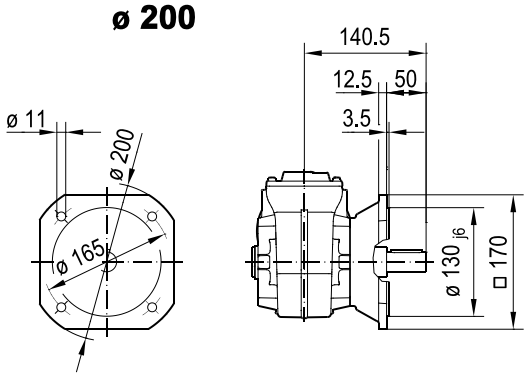

WAF39..

ø 160

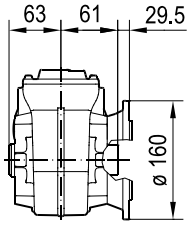

ø 200

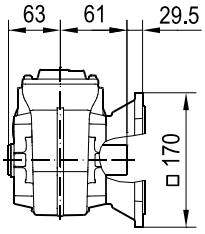

ø 30 H7
DIN 6885-3

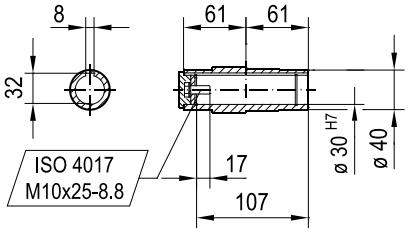

ø 25 H7

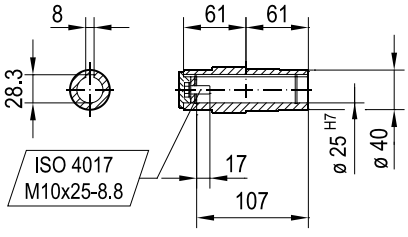

(→ 📖 4.1)	DRN								
	63MS	63M	71MS	71M	80MK	80MS	80M	90S	90L
AC	115	115	139	139	156	156	156	179	179
AD	98	98	118	118	128	128	128	140	140
ADS	98	98	129	129	139	139	139	150	150
L	382	396	398	418	429	446	475	476	508
LS	438	452	465	485	510	527	556	570	602
LB	190	204	206	226	237	254	283	284	316
LBS	246	260	273	293	318	335	364	378	410

20 015 02 20

WHF39..

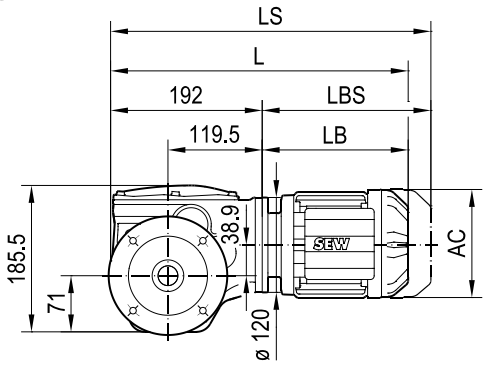

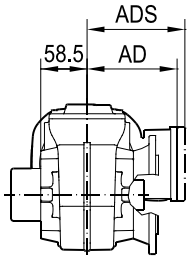

ø 160

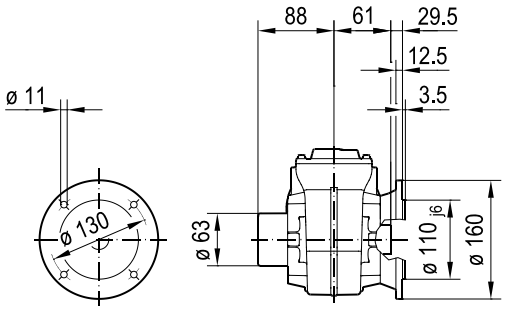

ø 200

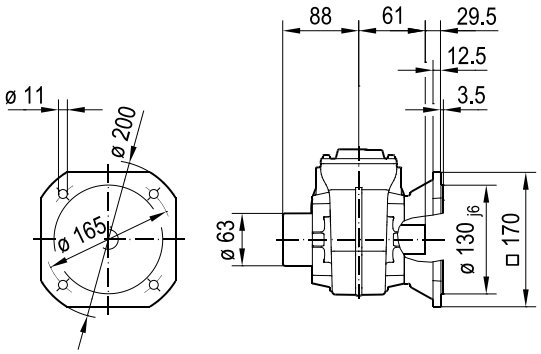

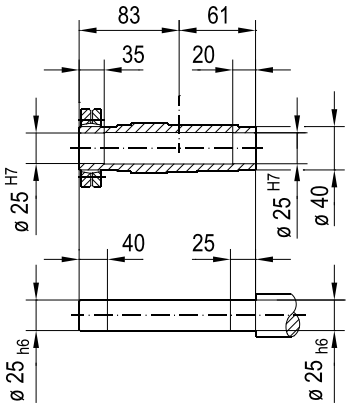

(→ 📖 4.1)	DRN								
	63MS	63M	71MS	71M	80MK	80MS	80M	90S	90L
AC	115	115	139	139	156	156	156	179	179
AD	98	98	118	118	128	128	128	140	140
ADS	98	98	129	129	139	139	139	150	150
L	382	396	398	418	429	446	475	476	508
LS	438	452	465	485	510	527	556	570	602
LB	190	204	206	226	237	254	283	284	316
LBS	246	260	273	293	318	335	364	378	410

20 016 04 20

WA39..

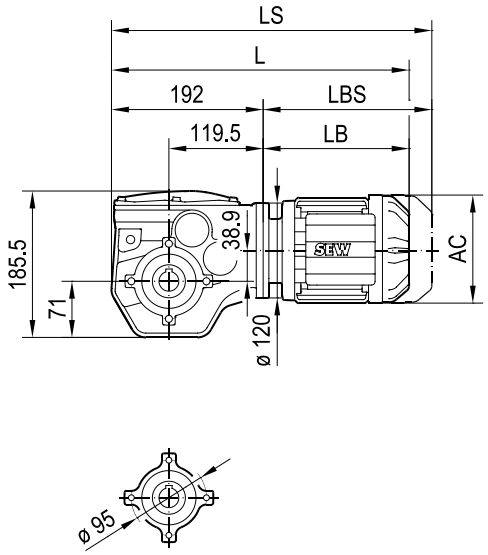

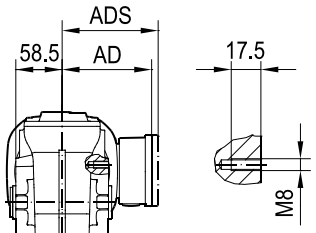

W.. /T

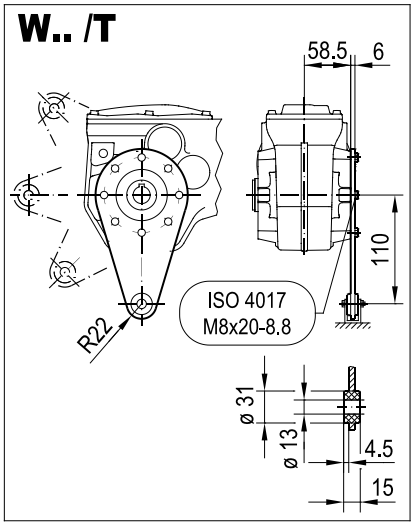

WA39..

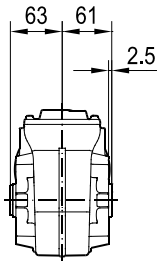

WH39..

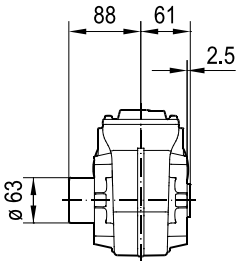

ø 30 H7
DIN 6885-3

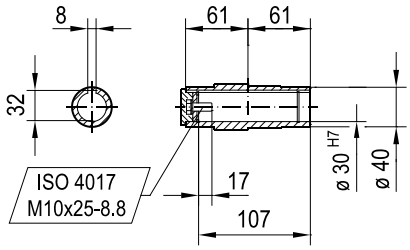

ø 25 H7

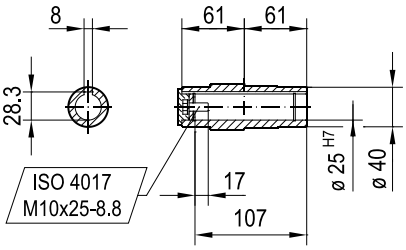

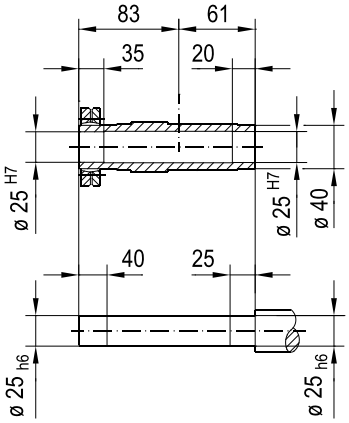

(→ 📖 4.1)	DRN								
	63MS	63M	71MS	71M	80MK	80MS	80M	90S	90L
AC	115	115	139	139	156	156	156	179	179
AD	98	98	118	118	128	128	128	140	140
ADS	98	98	129	129	139	139	139	150	150
L	382	396	398	418	429	446	475	476	508
LS	438	452	465	485	510	527	556	570	602
LB	190	204	206	226	237	254	283	284	316
LBS	246	260	273	293	318	335	364	378	410

20 017 03 20

WT39..

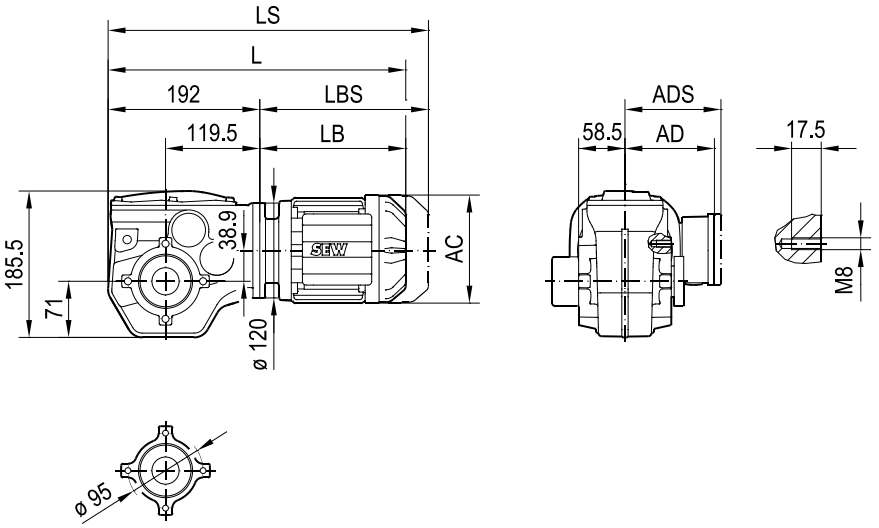

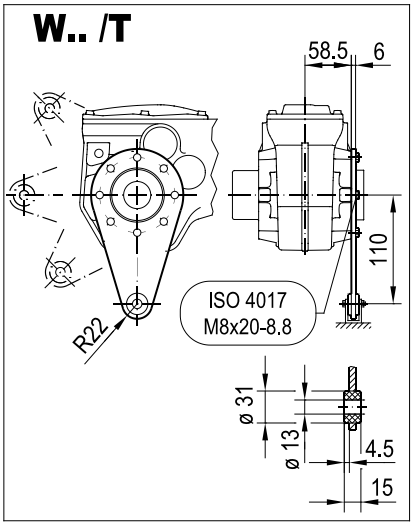

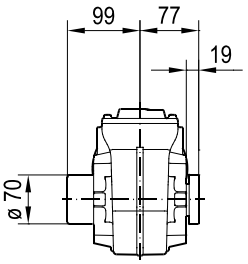

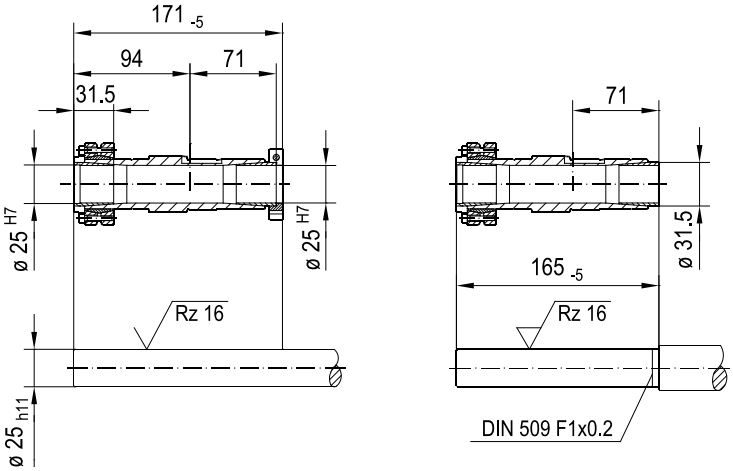

(→ 📖 4.1)	DRN								
	63MS	63M	71MS	71M	80MK	80MS	80M	90S	90L
AC	115	115	139	139	156	156	156	179	179
AD	98	98	118	118	128	128	128	140	140
ADS	98	98	129	129	139	139	139	150	150
L	382	396	398	418	429	446	475	476	508
LS	438	452	465	485	510	527	556	570	602
LB	190	204	206	226	237	254	283	284	316
LBS	246	260	273	293	318	335	364	378	410

20 004 01 21

WF49..

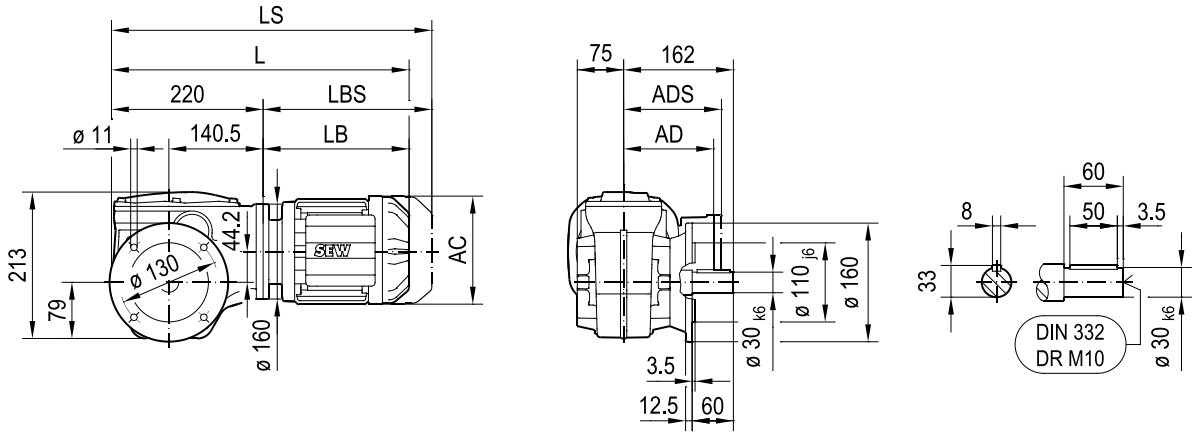

WAF49..

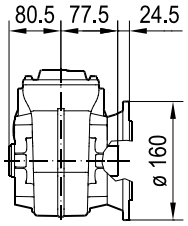

WHF49..

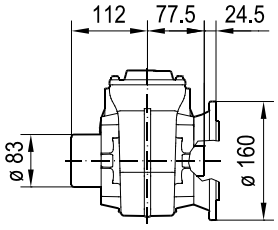

ø 35 H7

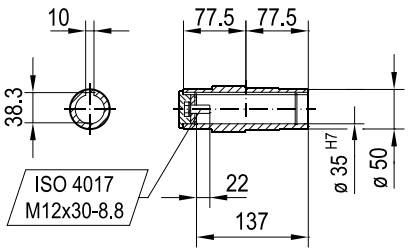

ø 30 H7

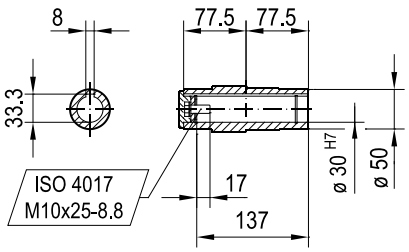

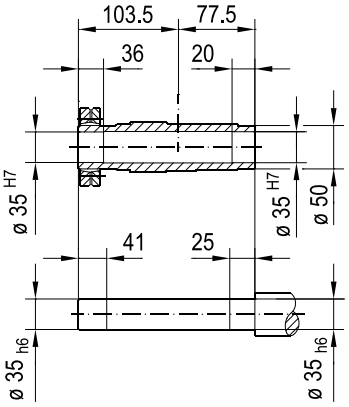

(→ 📖 4.1)	DRN										
	63MS	63M	71MS	71M	80MK	80MS	80M	90S	90L	100LS	100L/LM
AC	115	115	139	139	156	156	156	179	179	197	197
AD	98	98	118	118	128	128	128	140	140	157	157
ADS	98	98	129	129	139	139	139	150	150	158	158
L	404	418	419	439	450	467	496	498	530	525	575
LS	460	474	487	507	531	548	577	591	623	619	669
LB	184	198	199	219	230	247	276	278	310	305	355
LBS	240	254	267	287	311	328	357	371	403	399	449

20 003 02 21

WA49..

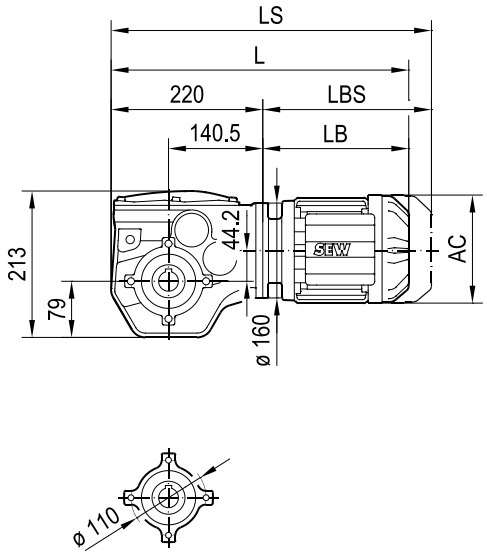

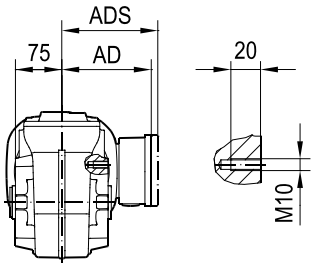

W.. /T

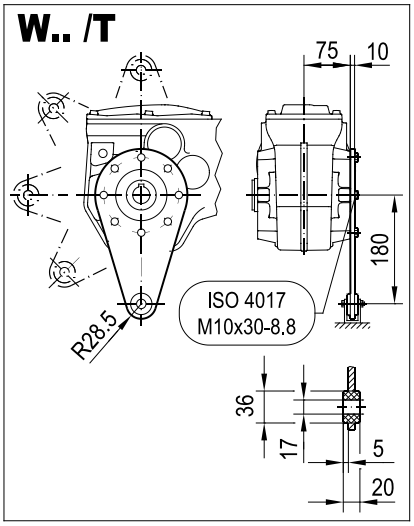

WA49..

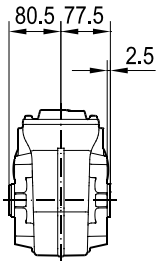

WH49..

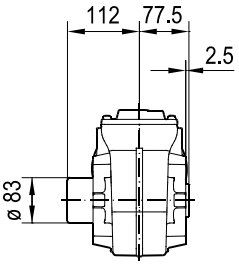

ø 35 H7

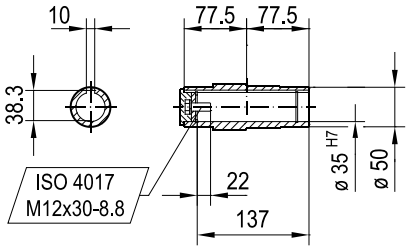

ø 30 H7

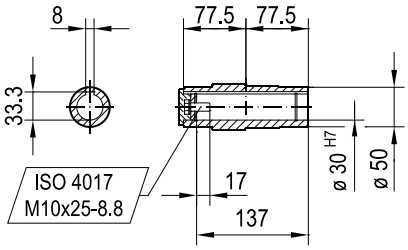

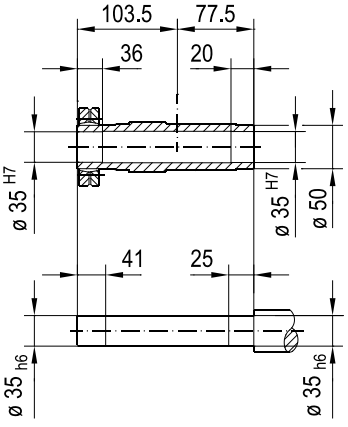

(→ 📖 4.1)	DRN										
	63MS	63M	71MS	71M	80MK	80MS	80M	90S	90L	100LS	100L/LM
AC	115	115	139	139	156	156	156	179	179	197	197
AD	98	98	118	118	128	128	128	140	140	157	157
ADS	98	98	129	129	139	139	139	150	150	158	158
L	404	418	419	439	450	467	496	498	530	525	575
LS	460	474	487	507	531	548	577	591	623	619	669
LB	184	198	199	219	230	247	276	278	310	305	355
LBS	240	254	267	287	311	328	357	371	403	399	449

20 005 02 21

WT49..

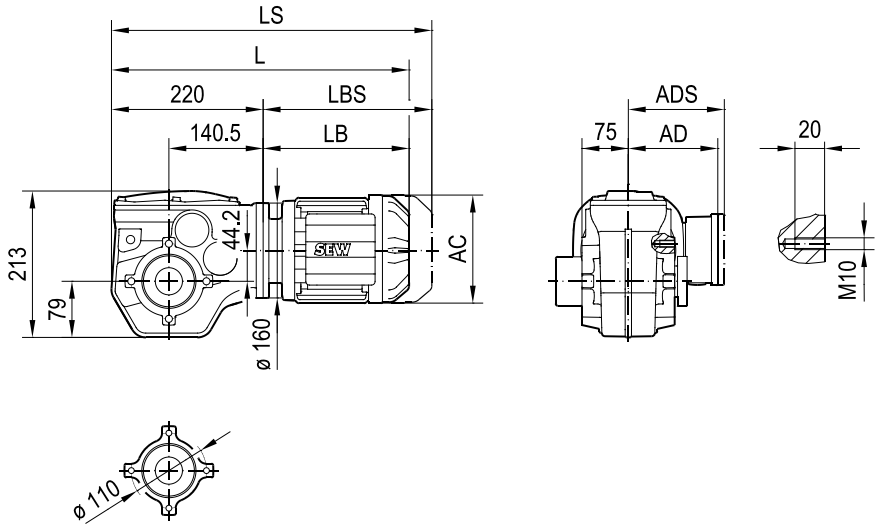

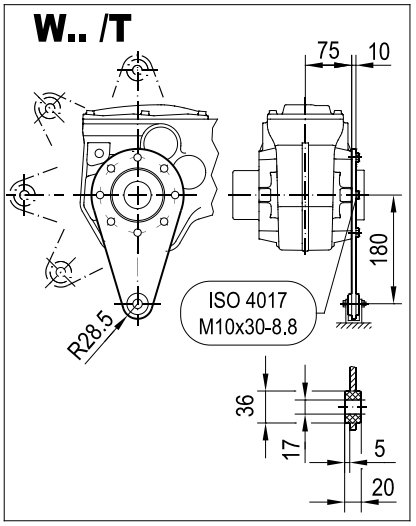

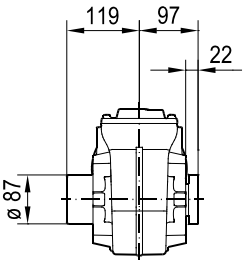

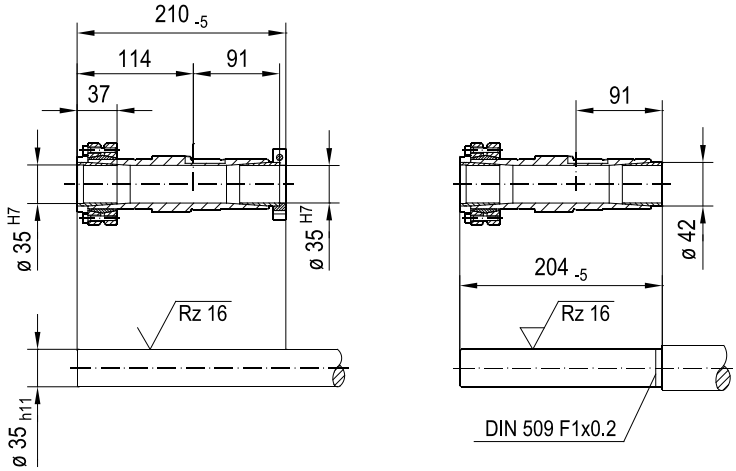

(→ 📖 4.1)	DRN										
	63MS	63M	71MS	71M	80MK	80MS	80M	90S	90L	100LS	100L/LM
AC	115	115	139	139	156	156	156	179	179	197	197
AD	98	98	118	118	128	128	128	140	140	157	157
ADS	98	98	129	129	139	139	139	150	150	158	158
L	404	418	419	439	450	467	496	498	530	525	575
LS	460	474	487	507	531	548	577	591	623	619	669
LB	184	198	199	219	230	247	276	278	310	305	355
LBS	240	254	267	287	311	328	357	371	403	399	449

20 001 02 22

WF59..

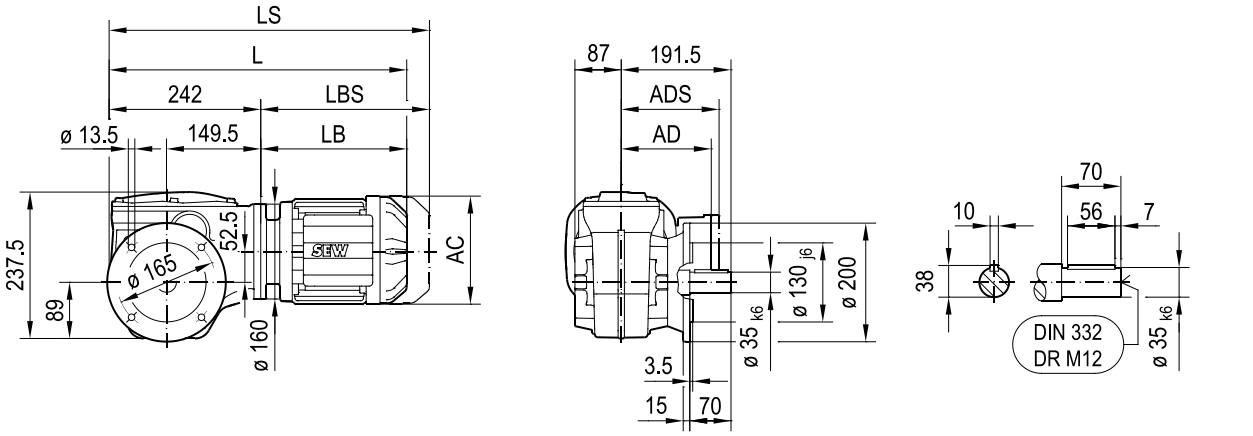

WAF59..

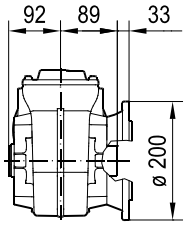

WHF59..

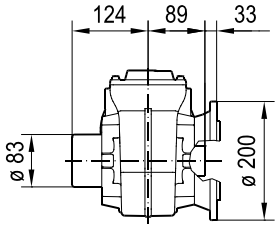

ø 40 H7

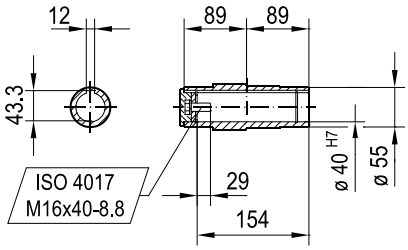

ø 35 H7

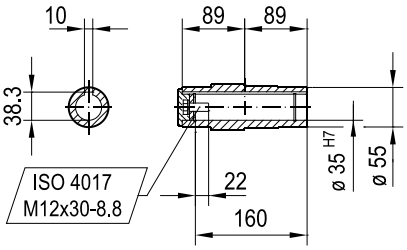

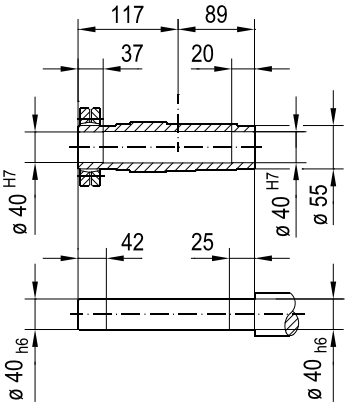

(→ 📖 4.1)	DRN											
	63MS	63M	71MS	71M	80MK	80MS	80M	90S	90L	100LS	100L/LM	112M
AC	115	115	139	139	156	156	156	179	179	197	197	221
AD	98	98	118	118	128	128	128	140	140	157	157	170
ADS	98	98	129	129	139	139	139	150	150	158	158	172
L	426	440	441	461	472	489	518	520	552	547	597	628
LS	482	496	509	529	553	570	599	613	645	641	691	740
LB	184	198	199	219	230	247	276	278	310	305	355	386
LBS	240	254	267	287	311	328	357	371	403	399	449	498

20 002 03 22

WA59..

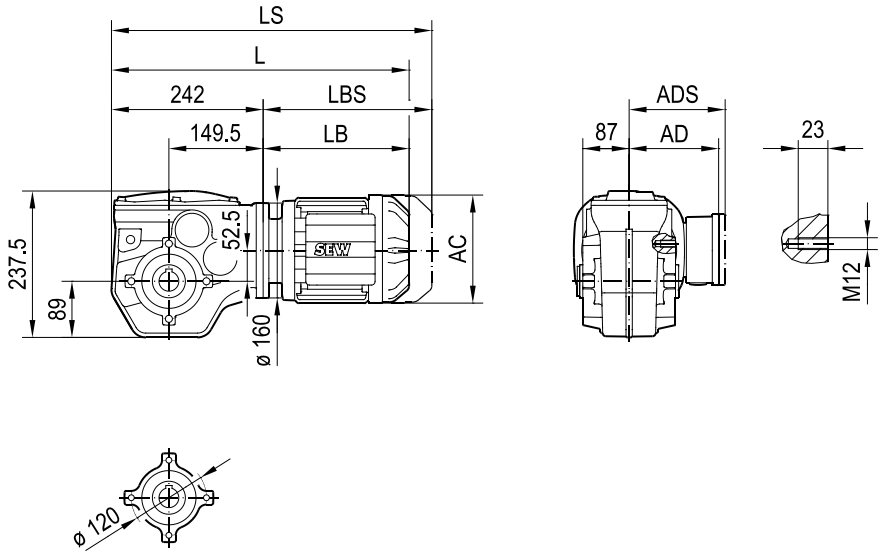

W.. /T

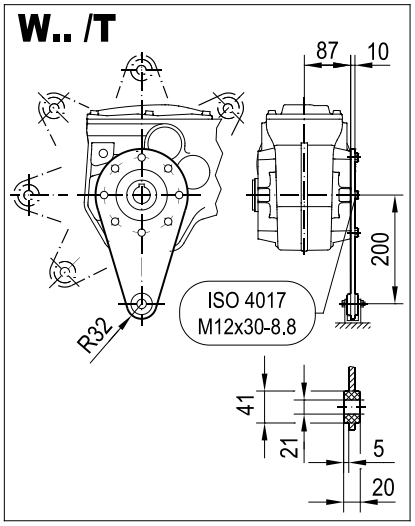

WA59..

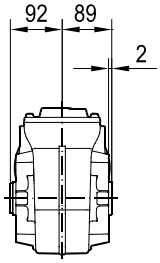

WH59..

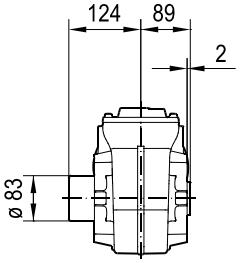

ø 40 H7

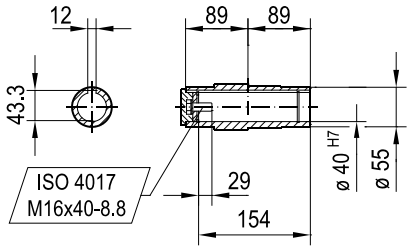

ø 35 H7

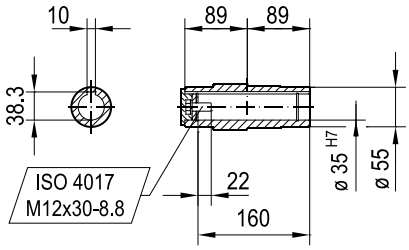

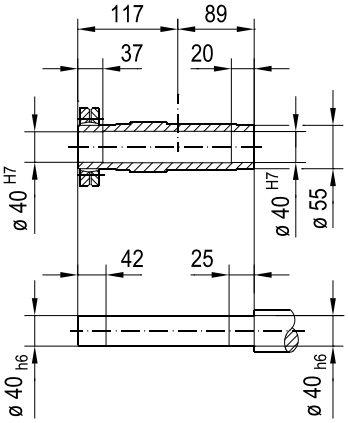

(→ 📖 4.1)	DRN											
	63MS	63M	71MS	71M	80MK	80MS	80M	90S	90L	100LS	100L/LM	112M
AC	115	115	139	139	156	156	156	179	179	197	197	221
AD	98	98	118	118	128	128	128	140	140	157	157	170
ADS	98	98	129	129	139	139	139	150	150	158	158	172
L	426	440	441	461	472	489	518	520	552	547	597	628
LS	482	496	509	529	553	570	599	613	645	641	691	740
LB	184	198	199	219	230	247	276	278	310	305	355	386
LBS	240	254	267	287	311	328	357	371	403	399	449	498

20 003 05 22

WT59..

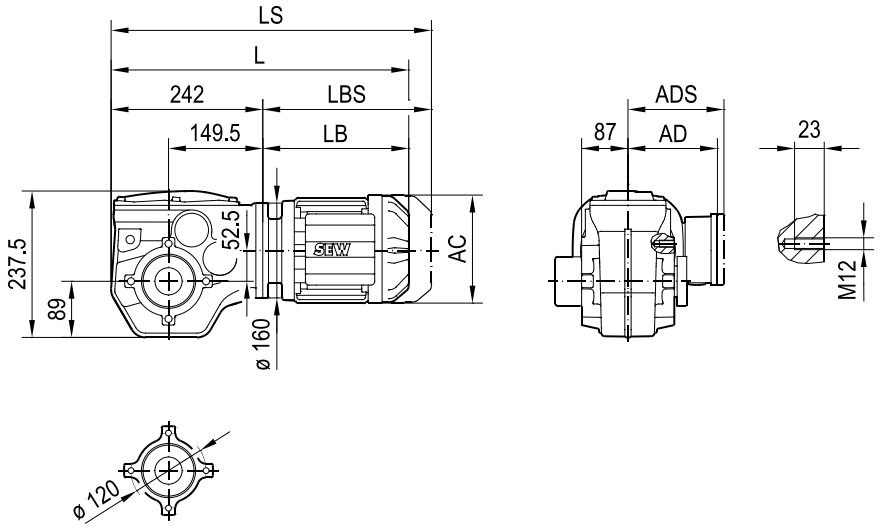

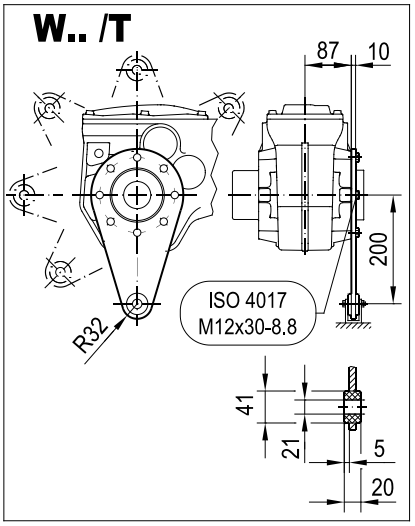

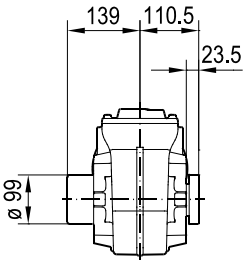

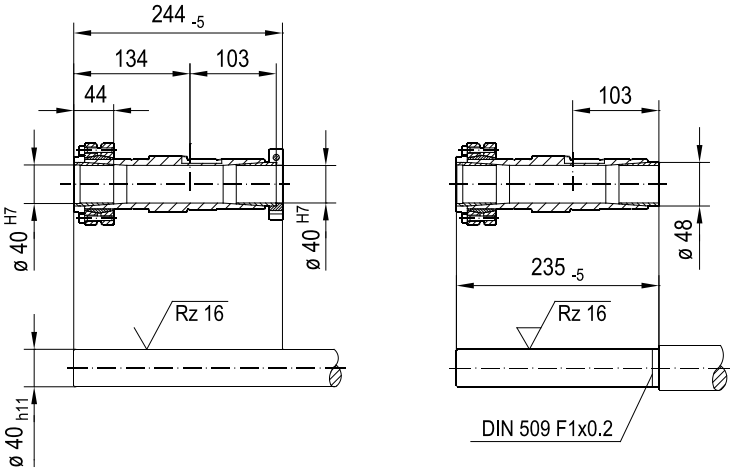

(→ 📖 4.1)	DRN											
	63MS	63M	71MS	71M	80MK	80MS	80M	90S	90L	100LS	100L/LM	112M
AC	115	115	139	139	156	156	156	179	179	197	197	221
AD	98	98	118	118	128	128	128	140	140	157	157	170
ADS	98	98	129	129	139	139	139	150	150	158	158	172
L	426	440	441	461	472	489	518	520	552	547	597	628
LS	482	496	509	529	553	570	599	613	645	641	691	740
LB	184	198	199	219	230	247	276	278	310	305	355	386
LBS	240	254	267	287	311	328	357	371	403	399	449	498

20 181 01 23

WF29HG..

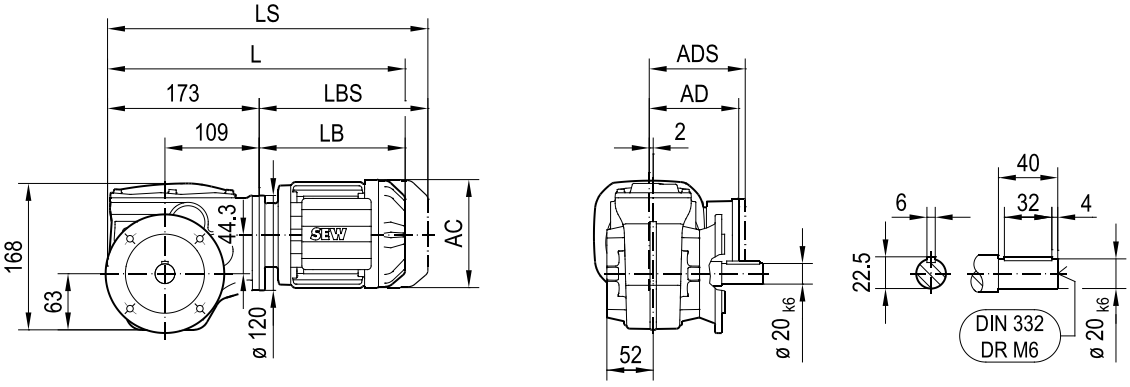

ø 120

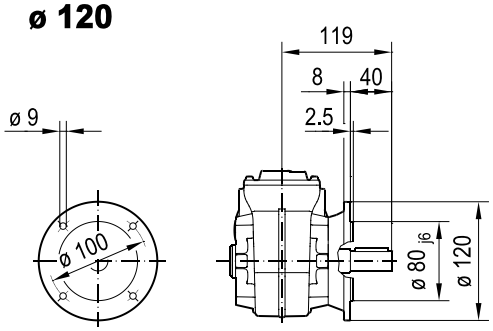

ø 160

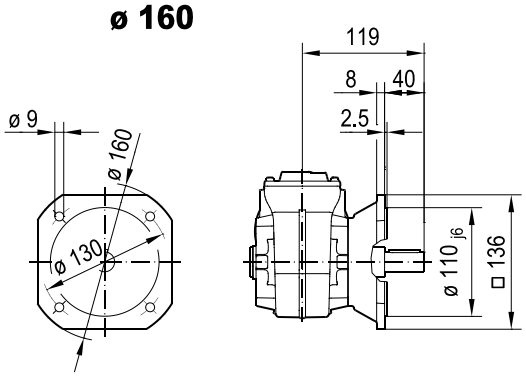

WAF29HG..

ø 120

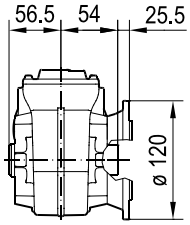

ø 160

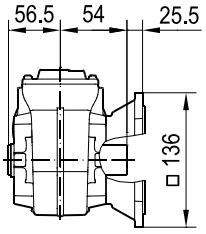

ø 25 H7

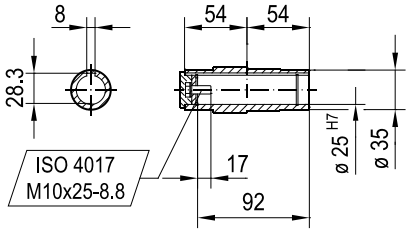

ø 20 H7

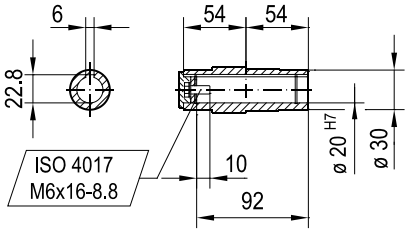

(→ 📖 4.1)	DRN							
	63MS	63M						
AC	115	115						
AD	98	98						
ADS	98	98						
L	361	375						
LS	417	431						
LB	188	202						
LBS	244	258						

20 183 01 23

WHF29HG..

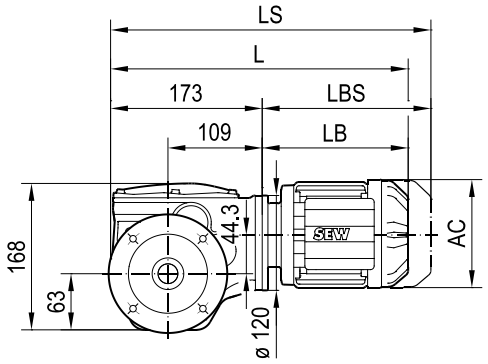

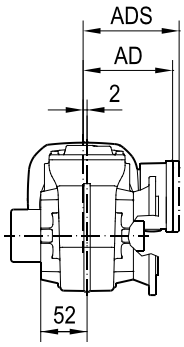

ø 120

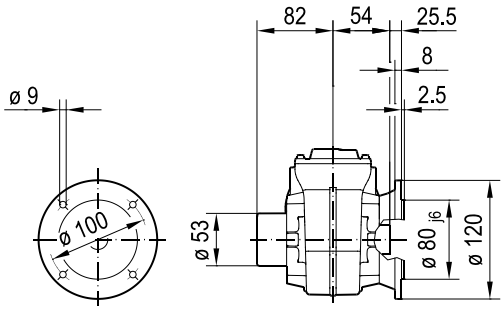

ø 160

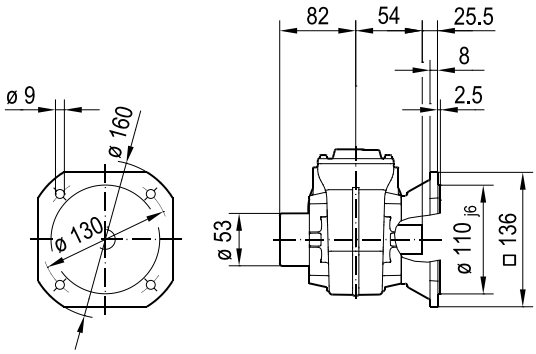

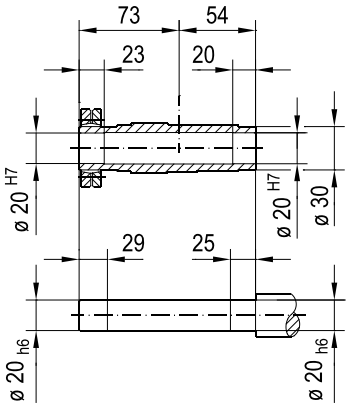

(→ 📖 4.1)	DRN							
	63MS	63M						
AC	115	115						
AD	98	98						
ADS	98	98						
L	361	375						
LS	417	431						
LB	188	202						
LBS	244	258						

20 187 01 23

WA29HG..

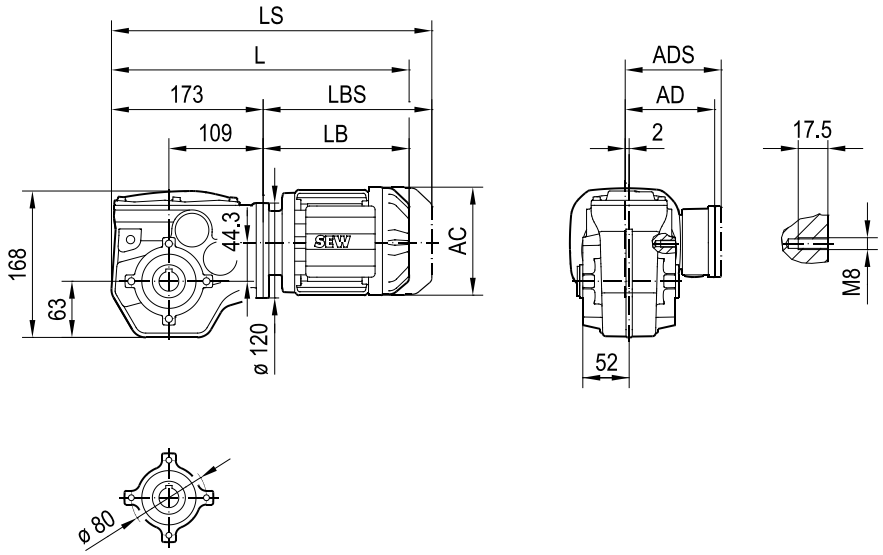

W.. /T

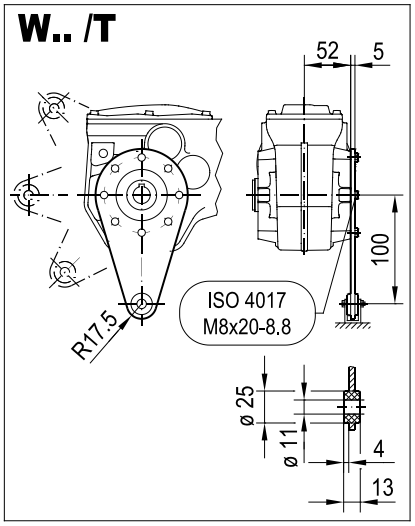

WA29HG..

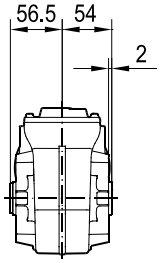

WH29HG..

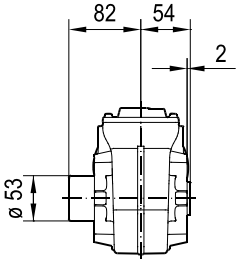

ø 25 H7

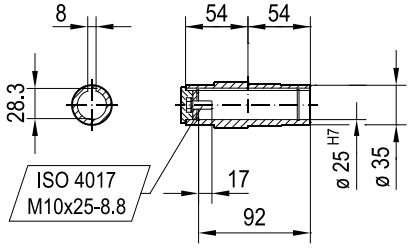

ø 20 H7

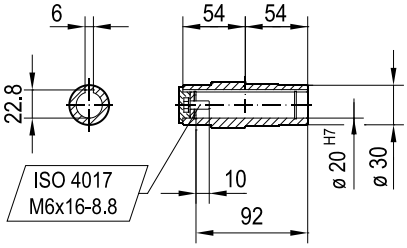

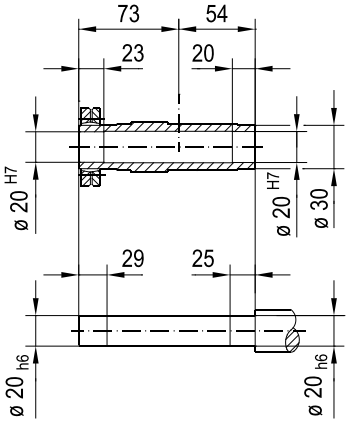

(→ 📖 4.1)	DRN							
	63MS	63M						
AC	115	115						
AD	98	98						
ADS	98	98						
L	361	375						
LS	417	431						
LB	188	202						
LBS	244	258						

20 191 01 23

WT29HG..

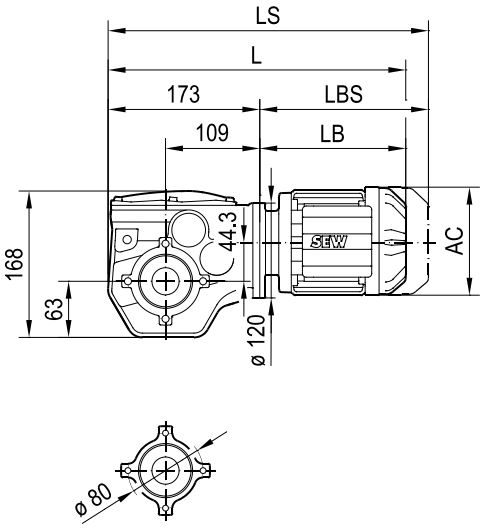

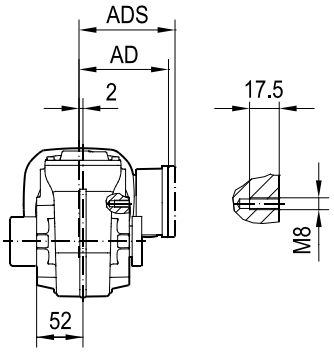

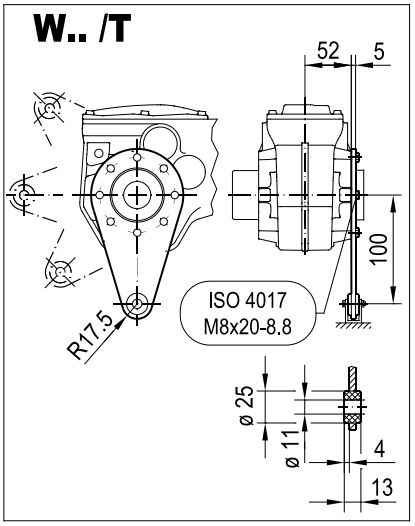

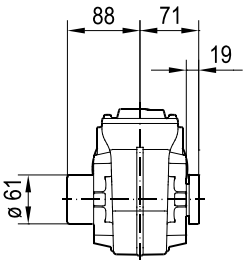

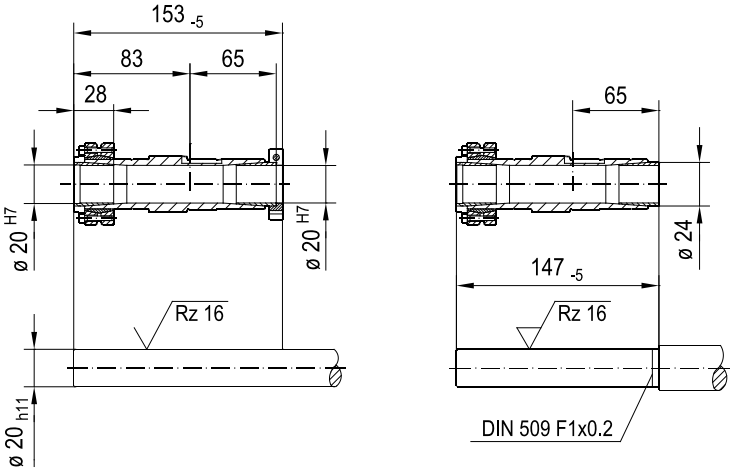

(→ 📖 4.1)	DRN							
	63MS	63M						
AC	115	115						
AD	98	98						
ADS	98	98						
L	361	375						
LS	417	431						
LB	188	202						
LBS	244	258						

20 182 01 23

WF39HG..

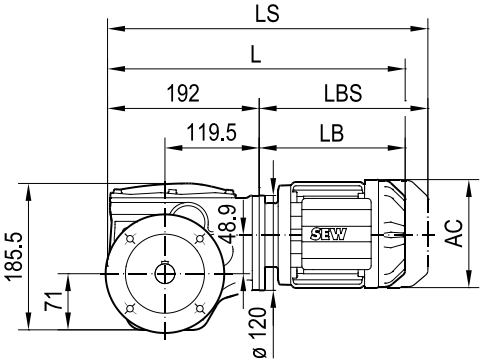

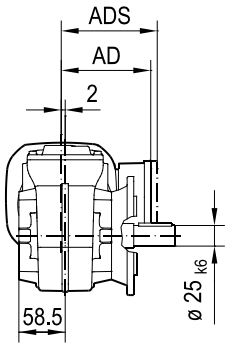

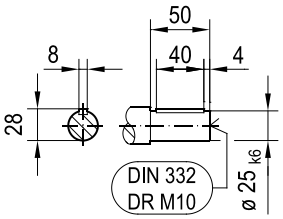

ø 160

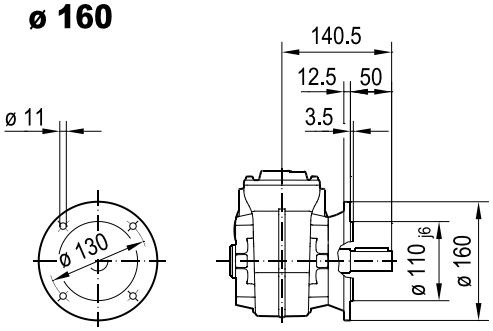

ø 200

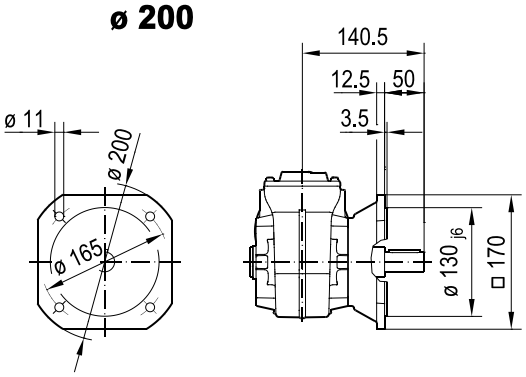

WAF39HG..

ø 160

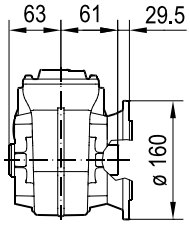

ø 200

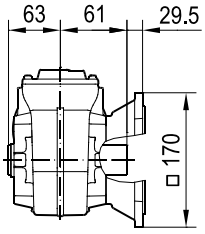

ø 30 H7
DIN 6885-3

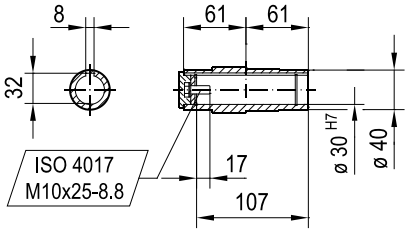

ø 25 H7

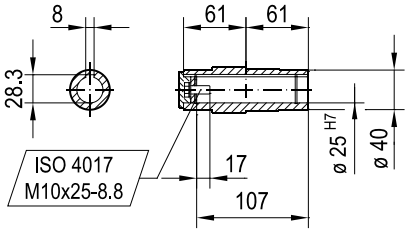

(→ 📖 4.1)	DRN							
	63MS	63M	71MS					
AC	115	115	139					
AD	98	98	118					
ADS	98	98	129					
L	380	394	395					
LS	436	450	463					
LB	188	202	203					
LBS	244	258	271					

20 184 01 23

WHF39HG..

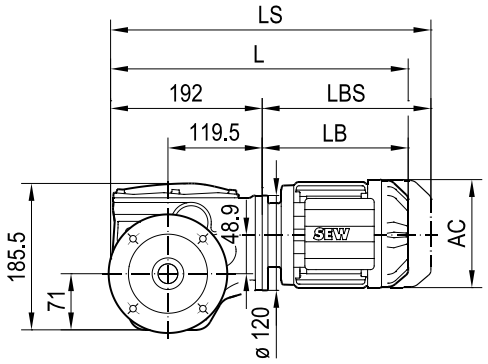

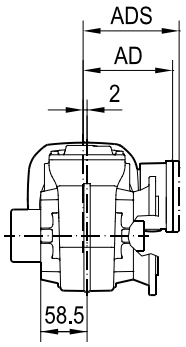

ø 160

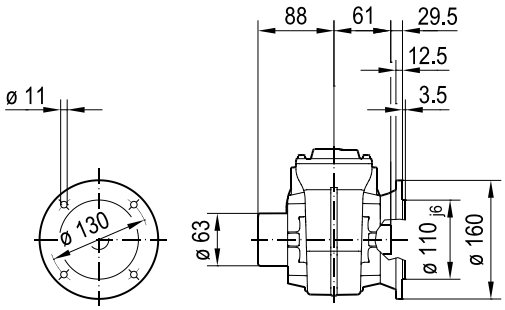

ø 200

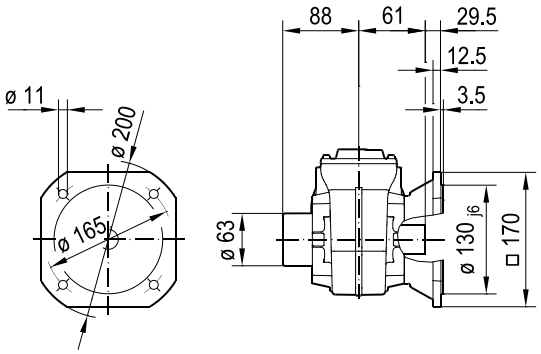

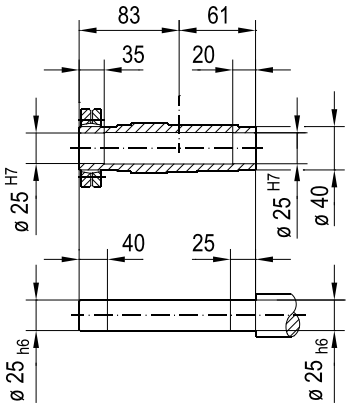

(→ 📖 4.1)	DRN							
	63MS	63M	71MS					
AC	115	115	139					
AD	98	98	118					
ADS	98	98	129					
L	380	394	395					
LS	436	450	463					
LB	188	202	203					
LBS	244	258	271					

20 188 01 23

WA39HG..

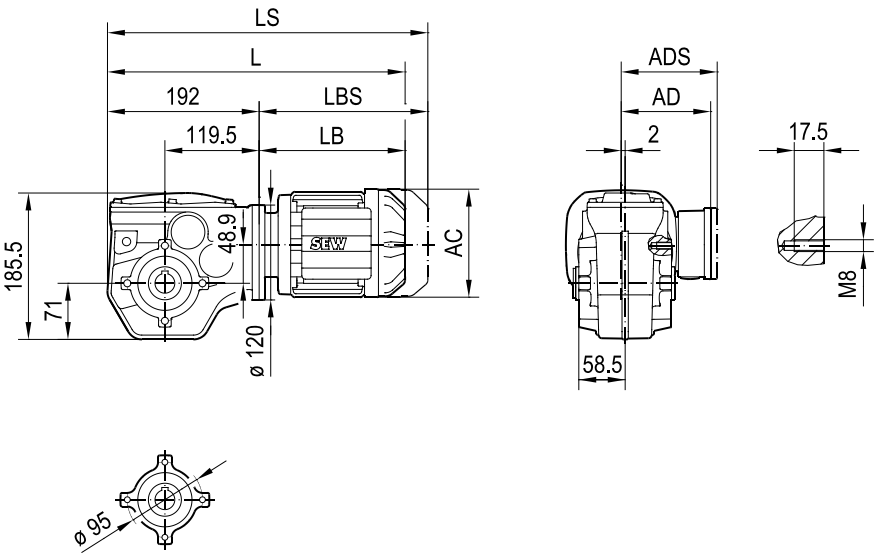

W.. /T

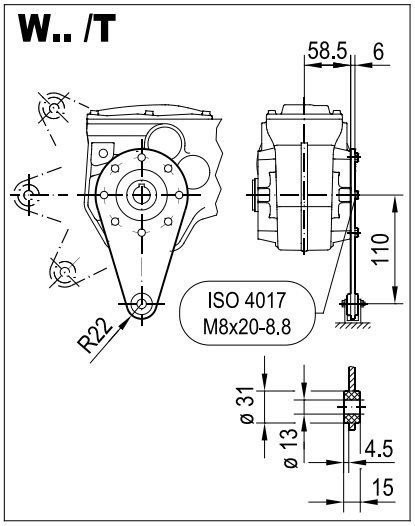

WA39HG..

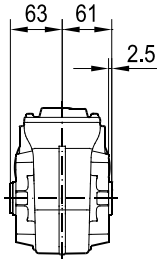

WH39HG..

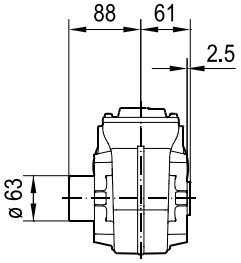

ø 30 H7
DIN 6885-3

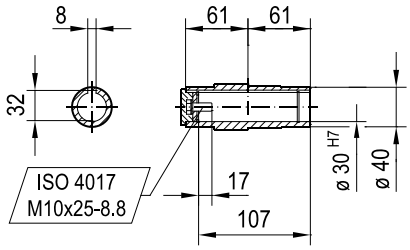

ø 25 H7

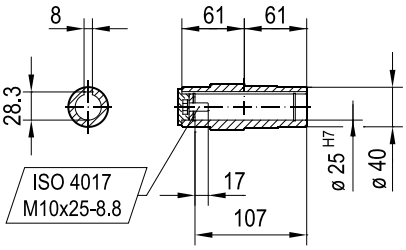

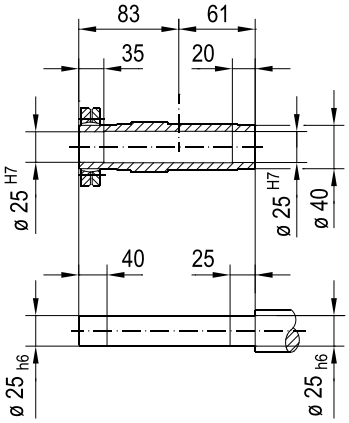

(→ 📖 4.1)	DRN							
	63MS	63M	71MS					
AC	115	115	139					
AD	98	98	118					
ADS	98	98	129					
L	380	394	395					
LS	436	450	463					
LB	188	202	203					
LBS	244	258	271					

20 192 01 23

WT39HG..

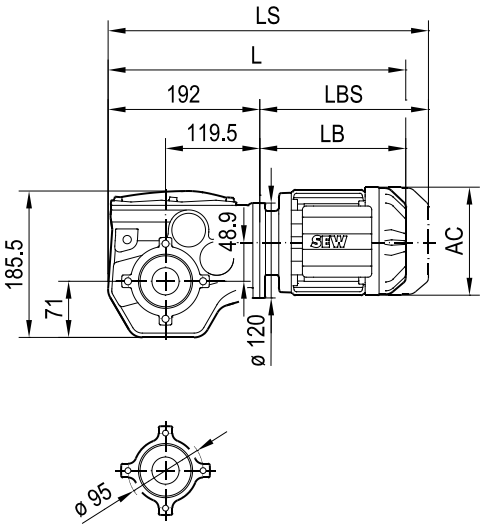

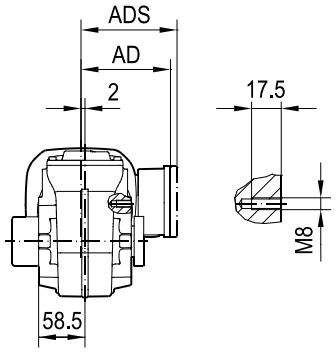

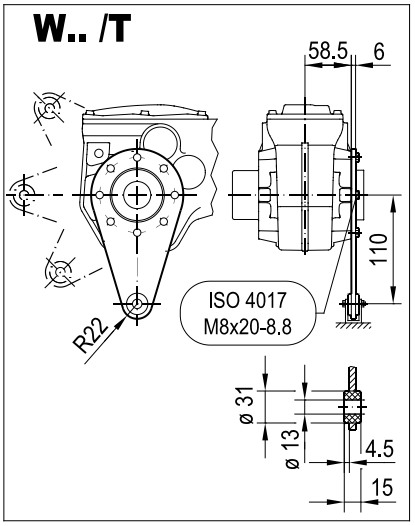

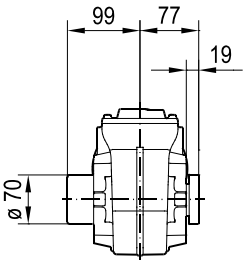

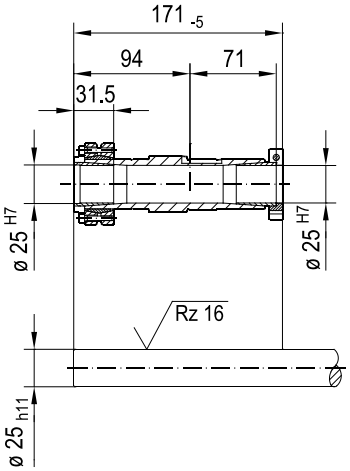

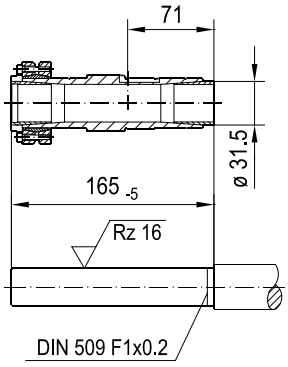

(→ 📖 4.1)	DRN							
	63MS	63M	71MS					
AC	115	115	139					
AD	98	98	118					
ADS	98	98	129					
L	380	394	395					
LS	436	450	463					
LB	188	202	203					
LBS	244	258	271					

20 185 01 23

WF49HG..

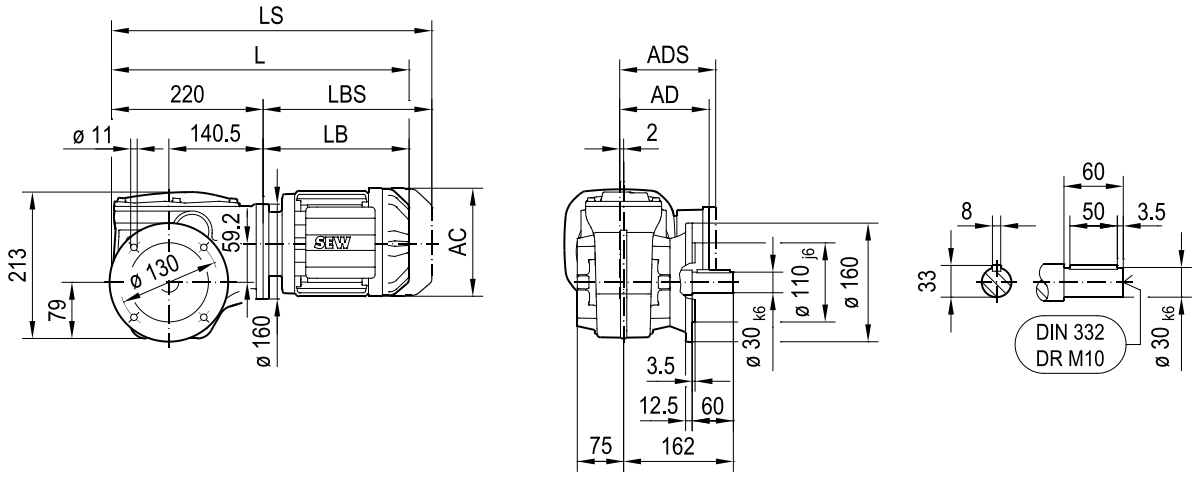

WAF49HG..

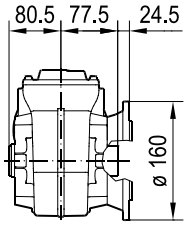

WHF49HG..

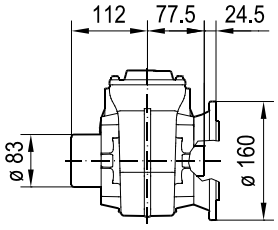

ø 35 H7

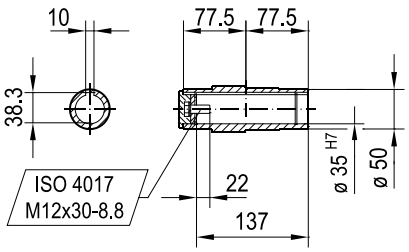

ø 30 H7

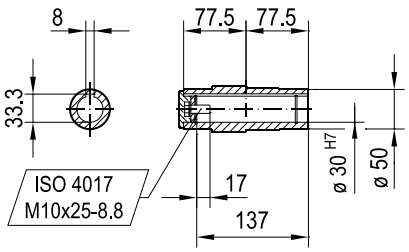

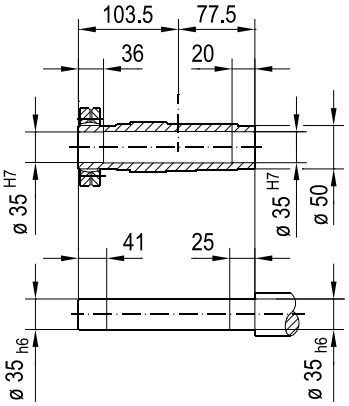

(→ 📖 4.1)	DRN							
	63MS	63M	71MS	71M				
AC	115	115	139	139				
AD	98	98	118	118				
ADS	98	98	129	129				
L	402	416	417	437				
LS	458	472	485	505				
LB	182	196	197	217				
LBS	238	252	265	285				

20 189 01 23

WA49HG..

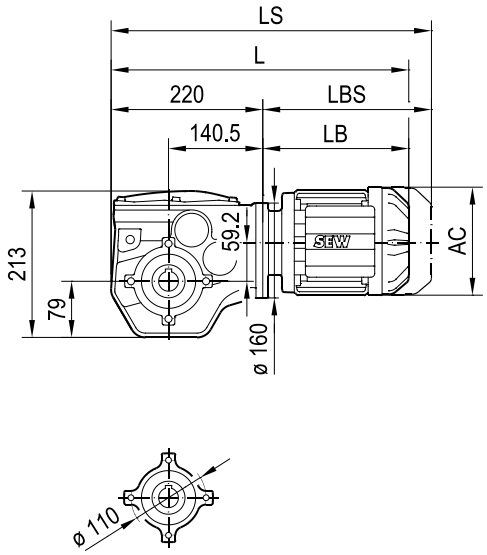

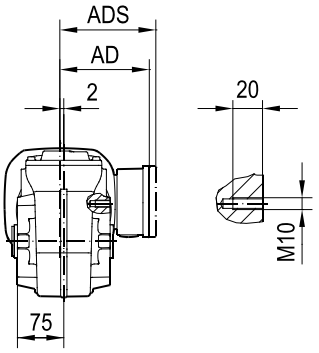

W.. /T

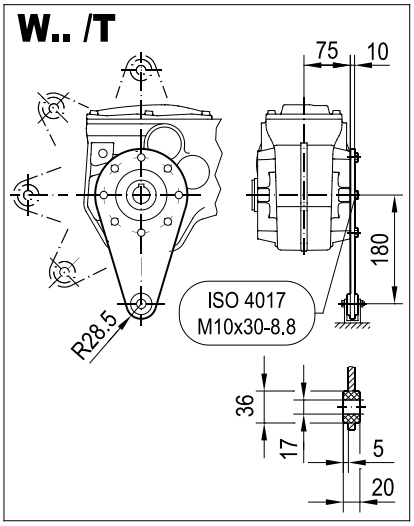

WA49HG..

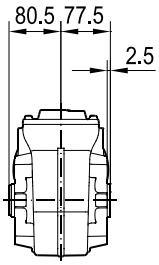

WH49HG..

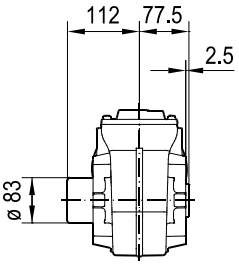

ø 35 H7

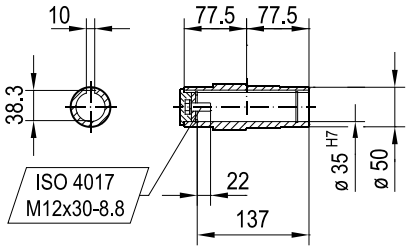

ø 30 H7

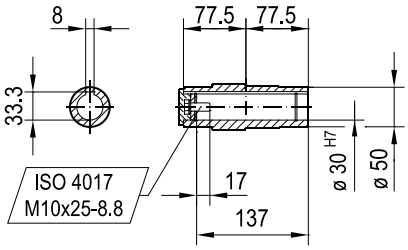

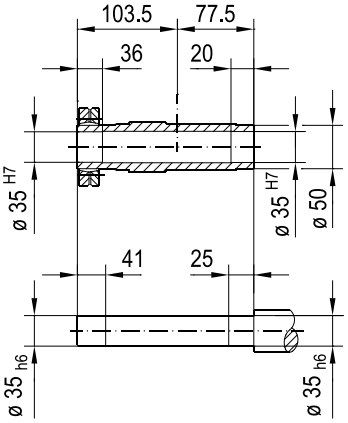

(→ 📖 4.1)	DRN							
	63MS	63M	71MS	71M				
AC	115	115	139	139				
AD	98	98	118	118				
ADS	98	98	129	129				
L	402	416	417	437				
LS	458	472	485	505				
LB	182	196	197	217				
LBS	238	252	265	285				

20 193 01 23

WT49HG..

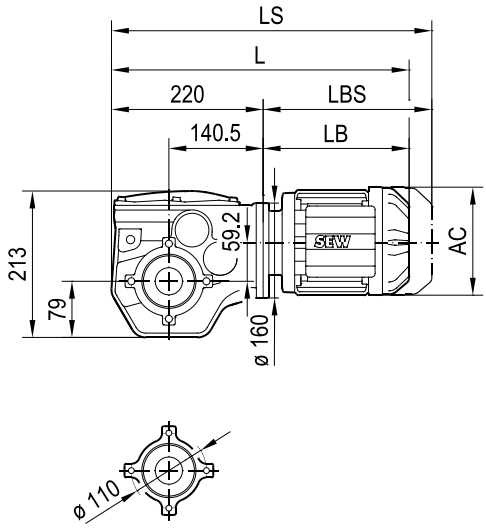

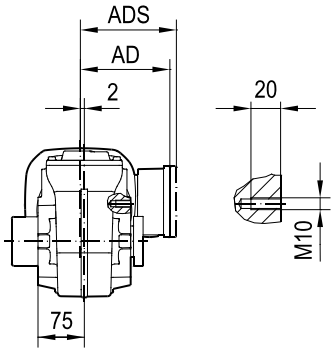

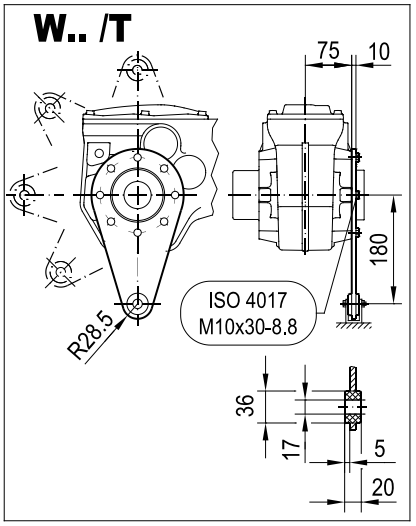

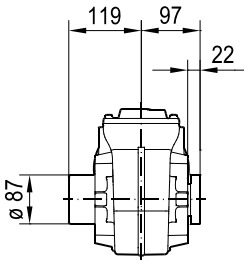

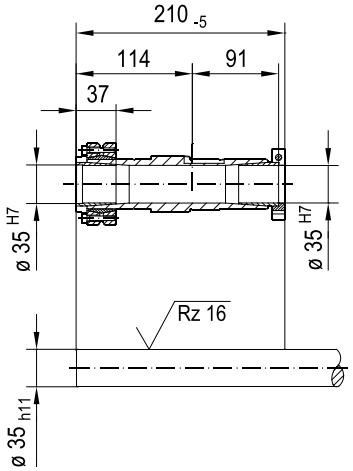

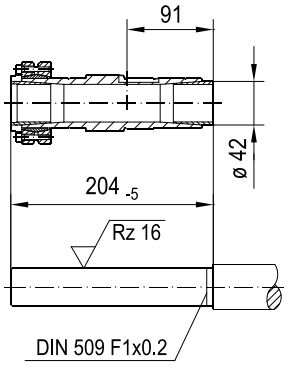

(→ 📖 4.1)	DRN							
	63MS	63M	71MS	71M				
AC	115	115	139	139				
AD	98	98	118	118				
ADS	98	98	129	129				
L	402	416	417	437				
LS	458	472	485	505				
LB	182	196	197	217				
LBS	238	252	265	285				

20 186 01 23

WF59HG..

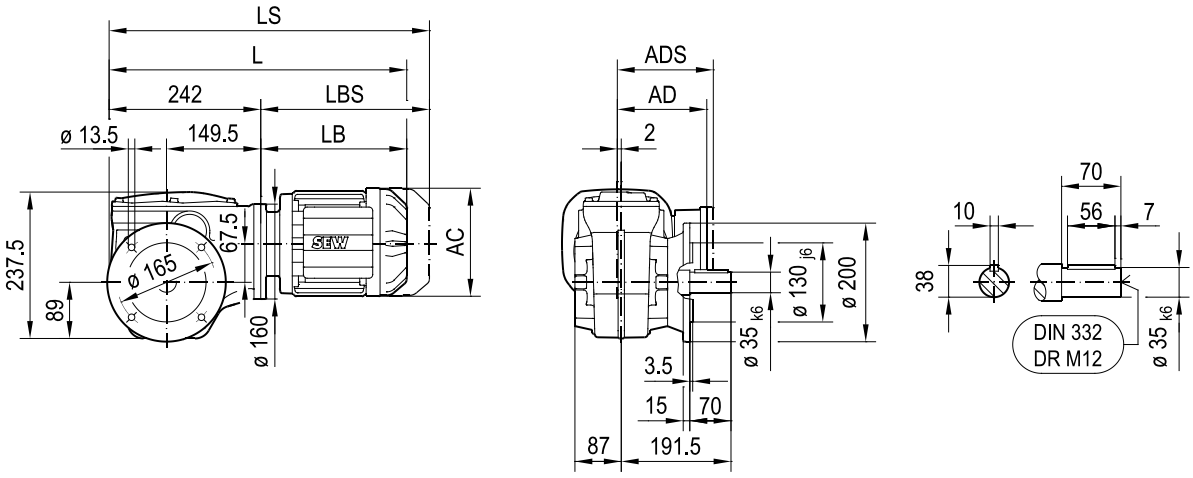

WAF59HG..

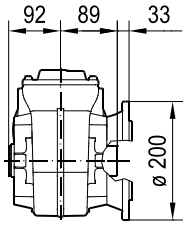

WHF59HG..

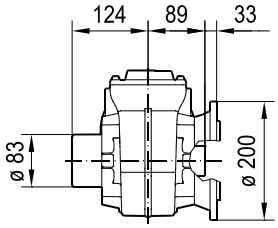

ø 40 H7

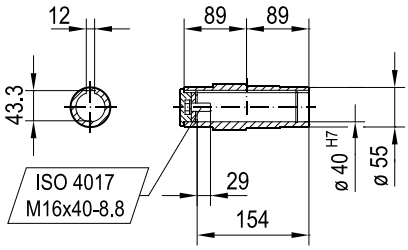

ø 35 H7

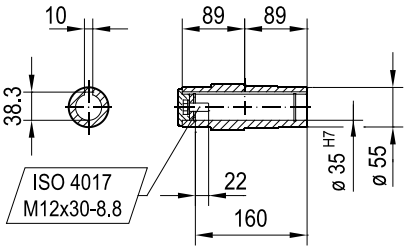

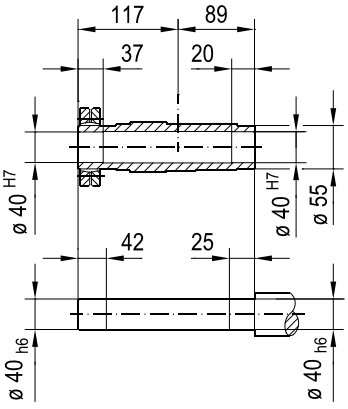

(→ 📖 4.1)	DRN							
	63MS	63M	71MS	71M				
AC	115	115	139	139				
AD	98	98	118	118				
ADS	98	98	129	129				
L	424	438	439	459				
LS	480	494	507	527				
LB	182	196	197	217				
LBS	238	252	265	285				

20 190 01 23

WA59HG..

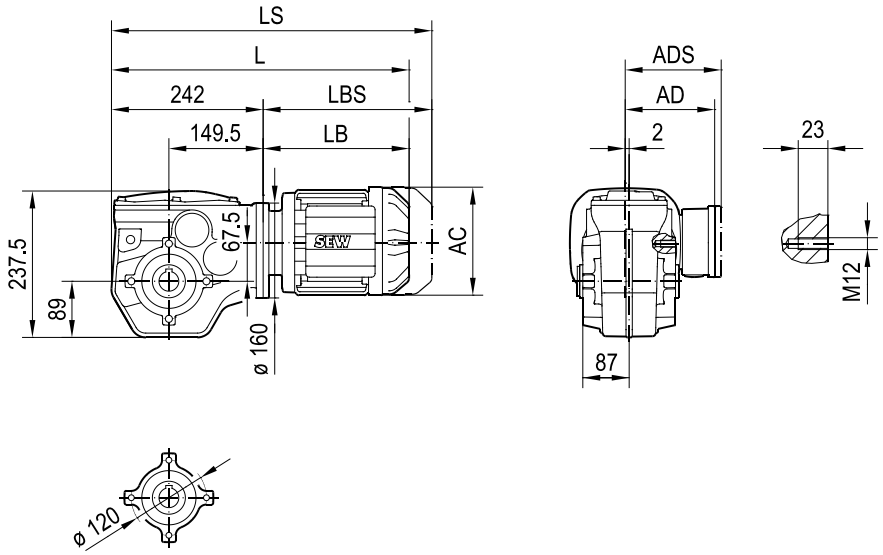

W.. /T

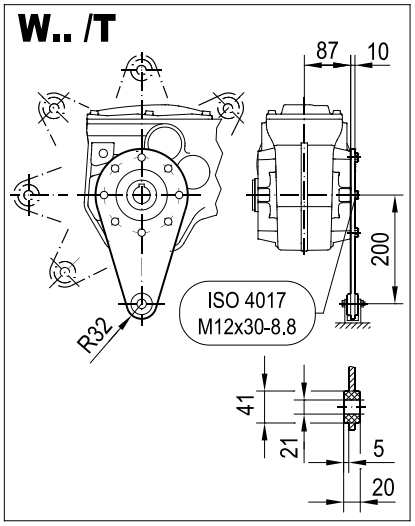

WA59HG..

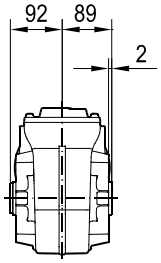

WH59HG..

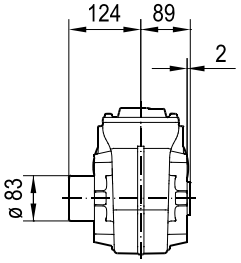

ø 40 H7

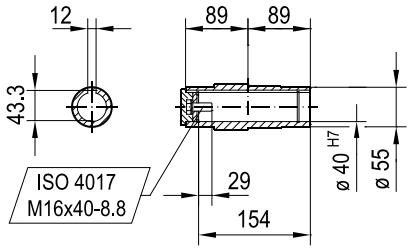

ø 35 H7

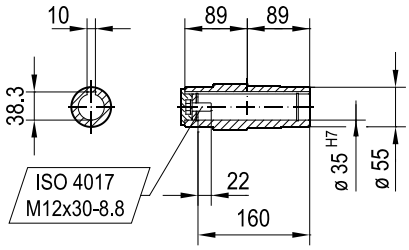

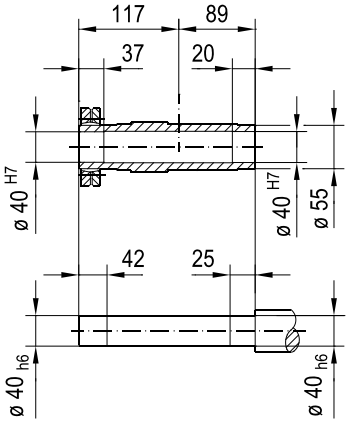

(→ 📖 4.1)	DRN							
	63MS	63M	71MS	71M				
AC	115	115	139	139				
AD	98	98	118	118				
ADS	98	98	129	129				
L	424	438	439	459				
LS	480	494	507	527				
LB	182	196	197	217				
LBS	238	252	265	285				

20 194 01 23

WT59HG..

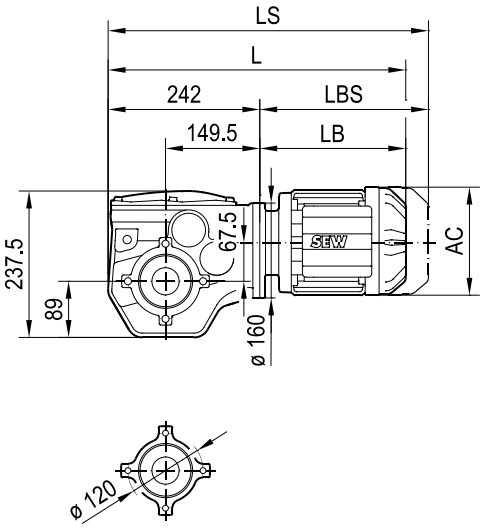

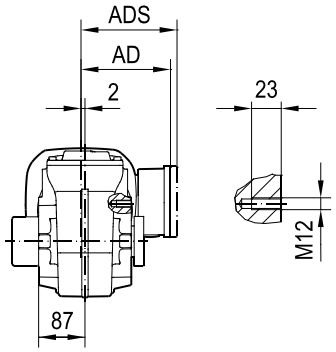

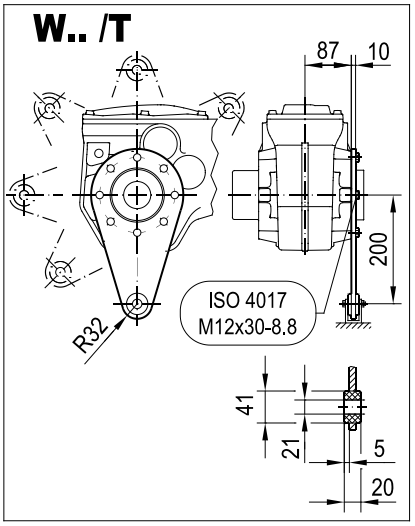

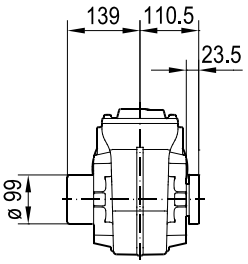

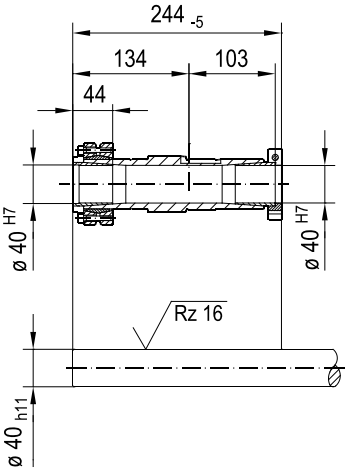

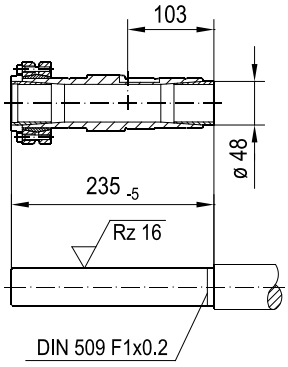

(→ 📖 4.1)	DRN							
	63MS	63M	71MS	71M				
AC	115	115	139	139				
AD	98	98	118	118				
ADS	98	98	129	129				
L	424	438	439	459				
LS	480	494	507	527				
LB	182	196	197	217				
LBS	238	252	265	285				

4.6.5 Dimension sheets W..R..DRN..

20 049 01 21

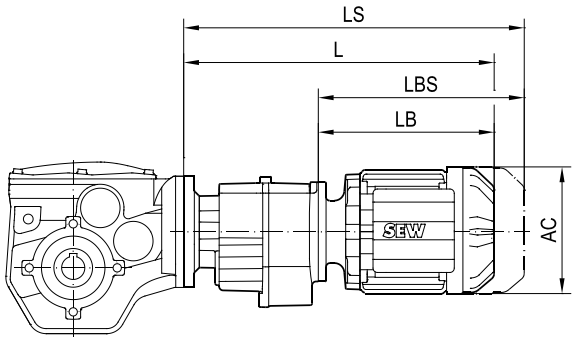

(→ 📖 4.1)	AC	L	LS	LB	LBS
W..29R17 DRN63MS	115	323	379	190	246
W..29R17 DRN63M	115	337	393	204	260
W..39R17 DRN63MS	115	323	379	190	246
W..39R17 DRN63M	115	337	393	204	260
W..39R17 DRN71MS	139	339	406	206	273
W..49R17 DRN63MS	115	323	379	190	246
W..49R17 DRN63M	115	337	393	204	260
W..49R17 DRN71MS	139	339	406	206	273
W..49R17 DRN71M	139	359	426	226	293
W..49R17 DRN80MK	156	370	451	237	318
W..59R37 DRN63MS	115	355	411	190	246
W..59R37 DRN63M	115	369	425	204	260
W..59R37 DRN71MS	139	371	438	206	273
W..59R37 DRN71M	139	391	458	226	293
W..59R37 DRN80MK	156	402	483	237	318

5 Configuration

5.1 Additional documentation on project planning

For more detailed information about the project planning for drives, refer to the SEW-EURODRIVE website where you can order or download the following documentation.

Drive engineering – practical implementation

- "Drive engineering – Practical implementation – Project planning for controlled and non-controlled drives" project planning manual
- Collection of formulas – Project planning for controlled and non-controlled drives
- EMC in drive engineering – Basic theoretical principles and EMC-compliant installation in practice
- Efficient system automation with mechatronic drive solutions

Manuals

- "DR.., DRN.., DRU.., DR2.., EDR.., EDRN.. AC motors – Project planning for BE.. brakes" manual
- "Built-in encoders, add-on encoders, and safety encoders for DR.., DRN.., DRU.., DR2.., EDR.., EDRN.. AC motors" product manual

5.2 General information on project planning

5.2.1 Drive and gear unit selection data

Determining application data

First, you require the data of the machine to be driven (mass, rotational speed, setting range, etc.) to select the correct drive. This data helps determine the required power, torque and speed. Refer to the documentation "Drive engineering – practical implementation – project planning for controlled and non-controlled drives" or the "SEW-Workbench" project planning software.

Selecting the correct drive

Calculate the power, rotational speed, torque, and overhung load of the drive. Observe all mechanical requirements. The suitable drive can then be determined.

Motors with adapter

As the motor dimensions are not standardized, the following motor data must be known to select the appropriate adapter:

- Shaft diameter and length
- Flange dimensions (edge length, diameter, centering shoulder, and hole circle)
- Maximum torque

Contact **SEW-EURODRIVE** if you have any questions on selection and project planning.

Application data required for project planning:

Formula symbol	Unit	Description
F_{A_a}	N	Axial force (tension and pressure) on the output shaft
f_{line}	Hz	Line frequency
F_{R_a}	N	Overhung load acting on the output shaft
h	m above sea level	Installation altitude
J_L	10^{-4} kgm^2	Mass moment of inertia to be driven
M_a at n_{amax}	Nm	Output torque at maximum output speed
M_a at n_{amin}	Nm	Output torque at minimum output speed
M_B	Nm	Braking torque
n_{amax}	min^{-1}	Maximum output speed
n_{amin}	min^{-1}	Minimum output speed
P_a at n_{amax}	kW	Output power at maximum output speed
P_a at n_{amin}	kW	Output power at minimum output speed
M1 – M6 R, F, K, S, W	–	Required gear unit type and mounting position
S.., ..% cdf	–	Duty type and cyclic duration factor cdf – the exact load cycle can be entered instead
T_{amb}	°C	Ambient temperature
V_N	V	Nominal brake voltage
V_{Mot}	V	Motor voltage
Z	h^{-1}	Switching frequency – alternatively, the exact load cycle can be specified
For inverter operation: required control mode and setting range.		

5.2.2 Service factor

Service factor f_B

The determination of the maximum permitted output torque M_{amax} and the resulting operating factor $f_B = M_{amax}/M_a$ is not standardized and very much dependent on the manufacturer. With a service factor $f_B = 1$, the gear units from SEW-EURODRIVE offer a maximum of safety and reliability in the area of fatigue strength (exceptions: Low temperatures and wear of the worm gear with helical-worm gear units). The service factor may not be comparable to the specifications of other gear unit manufacturers. Contact SEW-EURODRIVE if necessary.

For the service factor, refer to the order confirmation and the selection tables in the gearmotor catalogs from SEW-EURODRIVE.

Required service factor f_{B_req}

The operating conditions are considered in order to determine the required service factor f_{B_req} for the gearmotor selection. Decisive factors are the requirements of the driven machine, as well as the ambient temperature and gear unit type, if applicable.

The service factor f_{B_req} results from other service factors described in the following chapters.

Service factor at low temperatures

At an ambient temperature of < -30 °C, observe the additional service factor $f_{B3} = 1.2$.

Application service factor

The effect of the driven machine on the gear unit is taken into account to a sufficient level of accuracy using the application service factor f_{B_L}. The service factor is determined according to the daily operating time and the switching frequency Z.

Three load classifications are taken into account depending on the mass acceleration factor. You can read the service factor applicable to your application from the following diagram.

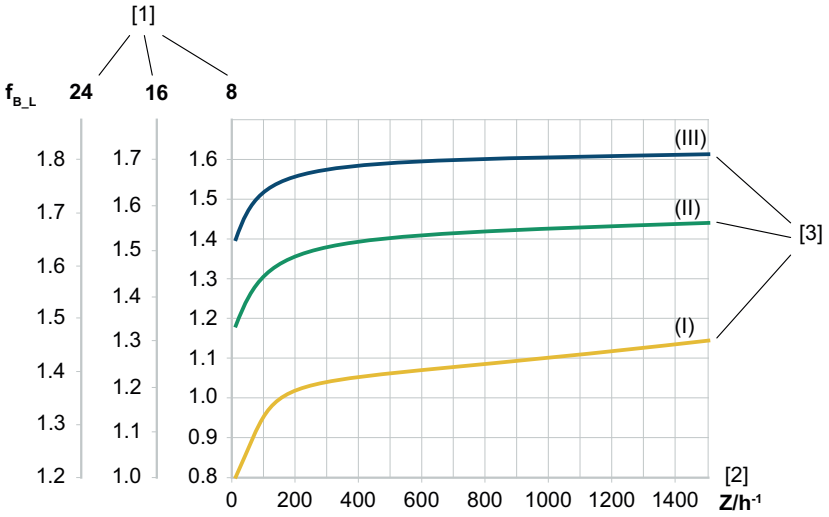

[1] Service factor f_{B_L} in relation to the daily operating time in hours/day

[2] Switching frequency Z: The cycles include all starting and braking procedures as well as changeovers from low to high speed and vice versa.

[3] Curves for load classification I, II and III

Definition of the load classification

The following 3 load classificatoins are distinguished:

- Load classification I: Uniform, almost no shock load, permitted mass acceleration factor ≤ 0.2
- Load classification II: Non-uniform, moderate shock load, permitted mass acceleration factor ≤ 3
- Load classification III: Very non-uniform, severe shock load, permitted mass acceleration factor ≤ 10

Mass acceleration factor

The mass acceleration factor is calculated as follows:

$$f_a = \frac{J_x}{J_{Mot}}$$

f_a	Mass acceleration factor	
J_{Lx}	Load moment of inertia reduced to the motor shaft	$[J_{Lx}] = kgm^2$
J_{Mot}	Motor moment of inertia	$[J_{Mot}] = kgm^2$

The motor inertia J_{Mot} is the mass moment of inertia of the motor and, if present, the brake and the flywheel fan (Z fan).

The load moment of inertia J_{Lx} includes the mass moments of inertia of the driven machine and the gear unit, reduced to the motor shaft.

Reducing the mass moment of inertia to the motor shaft

The reduction to the motor speed is calculated using the following formula:

$$J_{Lx} = J_L \times \left(\frac{1}{i_G}\right)^2$$

J_{Lx}	Load moment of inertia reduced to the motor shaft	$[J_{Lx}] = kgm^2$
J_L	Mass moment of inertia with reference to the output speed of the gear unit	$[J_L] = kgm^2$
i_G	Gear unit ratio	

Service factors $f_{B_L} > 1.8$ may be required with large mass acceleration factors (> 10), high levels of backlash in the transmission elements, or large overhung loads. Consult **SEW-EURODRIVE** in these cases.

Service factor for helical-worm gear units

In case of helical-worm gear units, the following 2 service factors must be observed:

- f_{B1} = Service factor based on ambient temperature
- f_{B2} = Service factor from cyclic duration factor

The additional service factors f_{B1} and f_{B2} can be determined by referring to the diagram below. For f_{B1}, the load classification is taken into account in the same way as for f_{B_L}. The following diagram shows the additional service factors f_{B1} and f_{B2}:

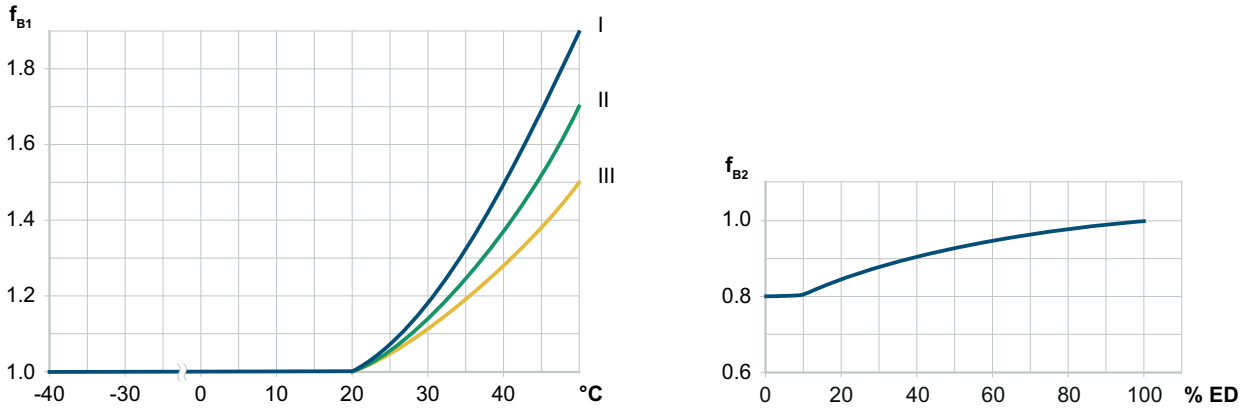

Cyclic duration factor

$$ED = \frac{t_L}{60} \cdot 100$$

t_L	min h^{-1}	Time under load
cdf	%	Maximum permitted cyclic duration factor that refers to the time proportion at speed ≠ 0 per cycle.

Conditions for selecting gear units based on the service factor

The determined required service factor f_{B_req} must be smaller than or equal to the service factor according to the selection tables.

$$f_{B_req} \leq f_B$$
$$F_{B_L} \cdot (f_{B1} \cdot f_{B2} \cdot f_{B3}) \leq f_B$$

or a

$$M_a \cdot f_{B_req} \leq M_{amax}$$
$$M_a \cdot F_{B_L} \cdot (f_{B1} \cdot f_{B2} \cdot f_{B3}) \leq M_{amax}$$

The service factors in square brackets are only taken into account for specific conditions regarding the application and ambient conditions. Else, the value is 1.

f_B	–	Service factor
f_{B_req}	–	Required service factor
f_{B_L}	–	Application service factor
f_{B1}		Service factor for helical-worm gear units only, based on ambient temperature
f_{B2}		Service factor for helical-worm gear units only, based on cdf
f_{B3}		Low temperature service factor, only applies to ambient temperatures of < -30 °C
M_a	Nm	Output torque
M_{amax}	Nm	Maximum output torque

Additional requirements for selecting gear units based on the service factor

When special ambient or application-related conditions need to be observed, additional requirements on gear unit selection based on the service factor need to be adhered to:

- SPIROPLAN® right-angle gearmotors with food-grade lubricant: W..10 – W..30: $f_B \geq 1.0$
- Gear units and compound gear units in combination with explosion-protected motors: $f_B \geq 1.0$

Examples

- An application with mass acceleration factor 2.5 (load classification II), 14 hours daily operating time (read at 16 h/day) and 300 cycles/h results in the service factor $f_{B_L} = 1.5$ according to the diagram. The f_B value of the required gearmotor must therefore be ≥ 1.5.
  - If the gearmotor is intended for operation at -35 °C, the following applies:
  - $f_{B_req} = f_{B_L} \times f_{B3} = 1.5 \times 1.2 = 1.8$
  - The gearmotor to be selected now requires an f_B value of ≥ 1.8.
- The gearmotor with service factor $f_{B_L} = 1.5$ of the previous example is to be a helical-worm gearmotor, and the ambient temperature is 40 °C:
  - $f_{B1} = 1.36$ (read at load classification II)
  - Time under load = 40 min/h → cdf = 66.67% → $f_{B2} = 0.95$
  - The required service factor is:
  - $f_{B_req} = f_{B_L} \times f_{B1} \times f_{B2} = 1.5 \times 1.36 \times 0.95 = 1.94$
  - The selected helical-worm gearmotor requires a service factor $f_B \geq 1.94$.

5.2.3 Efficiency of gear units

General information

The efficiency of the gear units is mainly determined by the gearing and bearing friction as well as by churning losses.

Keep in mind that the starting efficiency of a gear unit is always less than its efficiency at operating speed. This is particularly pronounced with SPIROPLAN® right-angle gear units of the W..0 series and with helical-worm gear units.

For information on churning losses and thermal rating, refer to chapter "Churning losses and thermal rating" (▶ 1051).

R, F, K gear units

The gearing efficiency of helical, parallel-shaft and helical-bevel gear units varies with the number of gear stages, between 96% (3-stage), 97% (2-stage) and 98% (1-stage).

S and W gear units

The gearing in helical-worm and SPIROPLAN® right-angle gear units produces a high proportion of sliding friction. As a result, these gear units have higher tooth friction losses and thus lower efficiencies than R.., F.. or K.. gear units.

Other factors influencing the efficiency:

- Gear ratio of the helical-worm or SPIROPLAN® stage
- Input speed
- Ambient temperature

Helical-worm gear units from SEW-EURODRIVE are helical-worm gear combinations and therefore have a significantly higher efficiency than conventional worm gear units, see from chapter Technical data of helical-worm gear units.

The efficiency may be $\eta < 0.5$ at very high gear ratios of the helical-worm stage.

Self-locking

With retrodriving torques on helical-worm gear units, the efficiency $\eta' = 2 - 1/\eta$ applies, which is significantly less favorable than the forward efficiency η. The helical-worm gear unit is statically self-locking if the forward efficiency is $\eta \leq 0.5$. If the braking effect of self-locking is to be used technically, contact **SEW-EURODRIVE**.

Note that the self-locking effect of helical-worm gear units is not permitted as the sole safety function for hoists.

Run-in phase

The tooth flanks of new helical-worm and SPIROPLAN® right-angle gear units of the W..0 series are not yet completely smooth.

This makes for a greater friction angle and less efficiency during the run-in phase than during later operation. This effect intensifies with increasing gear ratio.

During the running-in phase, the nominal efficiency of the gear unit is reduced by the respective value in the following tables.

	Helical-worm gear units	
	i range	**η reduction**
1-speed	Approx. 50 – 280	Approx. 12%
2-speed	Approx. 20 – 75	Approx. 6%
3-speed	Approx. 20 – 90	Approx. 3%
5-speed	Approx. 6 – 25	Approx. 3%
6-speed	Approx. 7 – 25	Approx. 2%

SPIROPLAN® right-angle gear units W..10 to W..30	
i range	**η reduction**
Approx. 35 – 75	Approx. 15%
Approx. 20 – 35	Approx. 10%
Approx. 10 – 20	Approx. 8%
approx. 8	Approx. 5%
approx. 6	Approx. 3%

The run-in phase usually lasts 48 hours. Gear units achieve their nominal efficiency values when the following conditions have been met:

- The gear unit has been completely run-in.
- The gear unit has reached nominal operating temperature.
- The recommended lubricant has been filled.
- The gear unit is operating in the nominal load range.

5.2.4 Churning losses and thermal rating

Churning losses may occur with the following conditions. They must be considered during the thermal check:

- A mounting position where the first gear unit stage is fully immersed in the lubricant. The corresponding mounting positions of the gear units are marked with an * in chapter "Mounting position sheets" (▶ 163).
- A high mean input speed and consequently a high circumferential speed of the gear wheels of the input gear stage.

If one or both conditions apply, determine the requirements from the application and the corresponding operating conditions (see chapter Data for calculating the thermal rating) and contact SEW-EURODRIVE. SEW-EURODRIVE can calculate the thermal rating based on the actual operating conditions. The thermal rating of the gear unit can be increased by appropriate measures, such as by using a synthetic lubricant with higher thermal endurance properties.

To keep churning losses to a minimum, use the gear unit preferably in mounting position M1.

5.2.5 Inverter operation

AC motors by **SEW-EURODRIVE** can be operated with inverters. If motors at the frequency inverter are operated at speeds > 1800 min^{-1}, **SEW-EURODRIVE** recommends using oil seals made of FKM (fluorocarbon rubber) on the A and B sides of the motor.

5.3 Configuration procedure

5.3.1 Procedure for configuring non-controlled drives

Based on the application, the drive train components are calculated and selected in the order described here. In contrast to project planning for controlled drives, the motor is selected before the gear unit.

1. **General application-side calculations**
   - Travel dynamics
   - Output speed and gear ratio requirement
   - Forces and torques
   - Mass moment of inertia
2. **Calculating power**
3. **Calculating and selecting the motor**
   - Selection criteria
   - Checking motor start-up
   - Switching frequency
4. **Calculating and selecting the brake**
   - Special requirements for lifting applications
   - Braking work, braking torque and switching frequency
   - Selecting the brake
   - Gear unit load during braking
   - Further selection criteria
5. **Calculating and selecting the gear unit**
   - Preselecting the gear unit
   - Calculating the actual gear unit load
   - Options for reducing the gear unit load

Basic calculation process

The required effective and maximum power demand of the application are calculated based on the intended application speed and the resistance forces to be overcome. A suitable motor is selected after calculating these criteria. In this case, the startup behavior of the grid-powered motor power must be taken into account as a central feature. This can be considered only after the preliminary selection of the motor because of the significant influence of individual motor characteristics.

While torque development can be influenced for motors operated on an inverter, a line-powered drive always follows its acceleration characteristic curve.

During a grid-powered startup process, the motor current is far above the rated current, regardless of the load condition. Starting at values that can be greater than $8 \times I_N$, the motor current drops as the motor speed increases. Under nominal load, the rated current I_N flows at the rated speed n_N in the motor.

Since the motor current affects motor temperature rise quadratically, grid-powered startup operations lead to disproportionate heat generation. Due to the speed-dependent air flow, the internal cooling of the motor by the integrated fan has a reduced effect during startup. In order not to exceed a permitted temperature increase limit for a large number of starts per time, correspondingly long times with or without reduced torque requirements are necessary in intermittent duty. The permitted temperature increase limit relates to the reference time of 10 minutes described in the standard.

The result is a maximum no-load starting frequency, meaning the permitted number of starts of the motor without load. This permitted switching frequency is reduced if relevant application data, such as load torque and load moment of inertia, are included. To avoid overheating the motor under consideration, the calculated number of starts per hour may not be exceeded.

Non-controlled applications can be decelerated either through sufficient friction in the application or by a mechanical motor brake. Similar to acceleration torque, the deceleration torque of the gear unit output, deceleration times and braking distances are determined from existing inertia and load conditions as well as from the electromechanical properties of the drive. Only a change in inertia, braking torque or motor type has an influence on the braking behavior.

5.3.2 Procedure for configuring controlled drives

Based on the application, the drive train components are calculated and selected in the order described here. In contrast to project planning for non-controlled drives, the motor is selected after the gear unit.

1. **General application-side calculations**
   - Travel dynamics
   - Output speed and gear ratio requirement
   - Forces and torques
   - Mass moment of inertia
2. **Calculating and selecting the gear unit**
   - Output end torques
   - Selecting the gear unit
   - External forces (overhung loads and axial loads)
3. **Calculating and selecting the motor**
   - Motor torques
   - Motor preselection (type, size)
   - Checking the drive selection
4. **Calculating and selecting the brake**
   - Special requirement for lifting applications
   - Braking work and braking torque
   - Selecting the brake
   - Gear unit load during emergency stop braking
5. **Calculating and selecting the frequency inverter**
   - Assigning the frequency inverter based on the rated motor power
   - Calculating the maximum and effective inverter current
   - Selecting the frequency inverter according to calculated motor currents
   - Selecting the frequency inverter for operating modes with current-controlled control
   - Derating factors
   - Braking resistor (optional)

Basic calculation process

The kinematic target values of the application are calculated first if they are not initially known. These include:

- Cycle time
- Distances
- Speeds/rotational speeds
- Accelerations

The calculated kinematic target values are used to calculate the dynamic torques. The resulting static torques for the gear unit output are calculated based on specified friction or hoist loads. Existing additional transmissions must be taken into account when the torques and rotational speeds are calculated. A suitable gear unit size is determined based on the maximum occurring torque. In order to select a gear ratio, the type of motor must be specified.

The requirements of the application are converted to the motor side. A motor is selected based on a maximum and an effective operating point.

A motor brake must always be selected for applications with a hoist load. The motor brake is selected as necessary for other applications. Criteria such as required holding reliability, permitted braking work and maximum braking distances are used as the basis for calculation and selection. The mechanical feasibility of the drive train as well as the gear unit load during emergency stop braking is then verified.

Frequency inverter selection is often based on the maximum and effective motor current required. A braking resistor is additionally required if the motor operates as a generator during deceleration. It converts the regenerative energy returned by the application into heat.

5.4 Multi-stage gearmotors

5.4.1 General information

You can achieve particularly low output speeds with compound gear units or compound gearmotors. An additional second gear unit, usually a helical gear unit, is installed in front of the gear unit or between the gear unit and the motor.

The resulting total reduction ratio may result in the gear units having to be protected against impermissibly high output torques.

5.4.2 Limiting the motor power

Reduce the maximum output motor power according to the maximum permitted output torque on the gear unit (M_{amax}). For this purpose, you must first determine the maximum permitted motor torque (M_{Mot}).

You can calculate the maximum permitted motor torque as follows:

$$M_{Mot} = \frac{M_{amax}}{i_{tot} \times \eta_{tot}}$$

M_{Mot}	Maximum permitted motor torque	$[M_{Mot}]$ = Nm
M_{amax}	Maximum permitted output torque	$[M_{amax}]$ = Nm
i_{tot}	Total gear unit ratio	
η_{tot}	Overall efficiency	$[\eta_{tot}]$ = %

Use this maximum permitted motor torque M_{Mot} and the load diagram of the motor to determine the associated value for the motor current.

Take appropriate measures to prevent the continuous current consumption of the motor from exceeding the previously determined value for the motor torque M_{Mot}. A suitable measure, for example, is to set the tripping current of the motor circuit breaker to this maximum current value. A motor circuit breaker also offers the option of bridging a short-term overload, for example during the motor startup phase. A suitable measure for inverter drives is to limit the output current of the inverter according to the determined motor current.

5.4.3 Checking brake torques

If you use a compound gear unit brakemotor, you have to limit the braking torque (M_B) according to the maximum permitted motor torque M_{Mot}. The maximum permitted braking torque is 200% M_{Mot}.

$$M_B \leq 200\% M_{Mot}$$

M_B	Nm	Braking torque
M_{Mot}	Nm	Motor torque

If you are unclear about the permitted switching frequency of the compound gear unit brakemotor, contact SEW-EURODRIVE.

5.4.4 Preventing blocking

Blocking of the compound gear unit or the compound gearmotor on the output end is not permitted. In this case, undetermined torques and uncontrolled overhung and axial loads can occur. This can destroy the gear units.

If you cannot rule out the blocking of the compound gear unit or the compound gearmotor due to the characteristics of your application, contact **SEW-EURODRIVE**.

5.4.5 Position of the oil level plug of compound gear units

To ensure sufficient lubrication of the 1st gear unit (large gear unit) of compound gear units, the following gear units have an increased oil level in the specified mounting position:

- Helical gear unit type R..R in mounting position M1 and M2
- Helical-worm gear unit type S..R in mounting position M3

The oil level plugs are located at the following positions, deviating from the specifications on the mounting position sheets:

R..R..

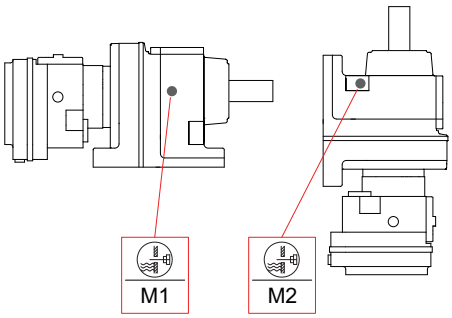

S..R..

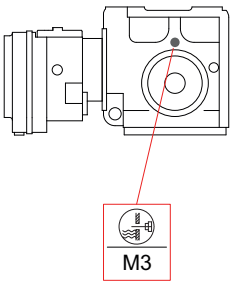

SF..R.., S.F..R.., SA..R..

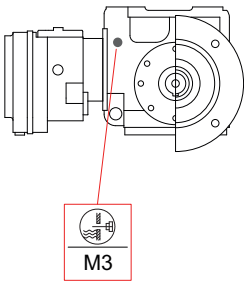

Symbol	Meaning
	Oil level plug

5.5 Overhung and axial loads of R.., F.., K.., S.., W.. gear units

5.5.1 Determining the overhung load

When determining the resulting overhung load, the type of transmission element mounted on the shaft end must be considered. The following transmission element factors f_Z have to be considered for various transmission elements.

Transmission element	Transmission element factor f_z	Comments
Gear wheels	1.15	< 17 teeth
Sprockets	1.40	< 13 teeth
Sprockets	1.25	< 20 teeth
Narrow V-belt pulleys	1.75	Consider influence of pretension force
Flat belt pulleys	2.50	Consider influence of pretension force
Toothed belt pulleys	1.50	Consider influence of pretension force
Gear rack pinion, pretensioned	2.00	Consider influence of pretension force
Gear rack pinion, not pretensioned	1.15	< 17 teeth

Transmission element factor at low temperatures

For temperatures < -30 °C, observe a transmission element factor $f_{Z1} = 1.2$.

The overhung load applied to the motor or gear shaft is then calculated as follows:

$$F_R = \frac{M_{max} \times 2000}{d_0} \times f_Z \times f_{Z1}$$

F_R	Overhung load	$[F_R] = N$
M_{max}	Torque in Nm	$[M_{max}] = Nm$
f_Z	Transmission element factor	
f_{Z1}	Transmission element factor $f_{Z1} = 1.2$ for ambient temperatures < -30 °C. For ambient temperatures ≥ -30 °C, $f_{Z1} = 1$	
d_0	Overhung load determined by diameter of installed transmission element	$[d_0] = mm$

5.5.2 Permitted overhung load F_{Ra}

The following important information refers to the overhung load value F_{Ra} in the relevant tables of this catalog:

F_{Ra} is calculated from the nominal bearing service life L_{10h} (according to ISO 281) and the input speed n_e according to the relevant tables of this catalog. For special operating conditions, the permitted overhung loads can be determined based on the modified bearing service life L_{na}. Contact **SEW-EURODRIVE** in this case.

The permitted overhung load is influenced by the direction of rotation and the force application angle. The values F_{Ra} listed in the catalog are based on the least favorable application angle and the least favorable direction of rotation.

The permitted overhung loads F_{Ra} for the output shafts of foot-mounted gear units with a solid shaft are listed in the selection tables for gearmotors. For other designs, contact **SEW-EURODRIVE**.

The overhung load data refers to a force application at the center of the output shaft 0.5 × l. With right-angle gear units, the application point is assumed to be at the A-side.

For gear units with hollow shaft and key (shaft-mounted design), the values refer to force application to the front end of the hollow shaft.

For the TorqLOC® hollow shaft mounting system design, no overhung load is permitted.

Reduced permitted overhung load

The following table shows the cases in which the overhung load must be limited:

Mounting surface	Gear unit	Mounting position	Limitations
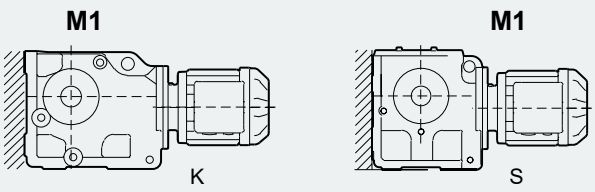	K37 – K157 S37 – S97 S37p – S97p	M1	Maximally 50% of the overhung load F_{Ra} specified in the selection tables is permitted in the case of mounting at the front-end (shaded areas).
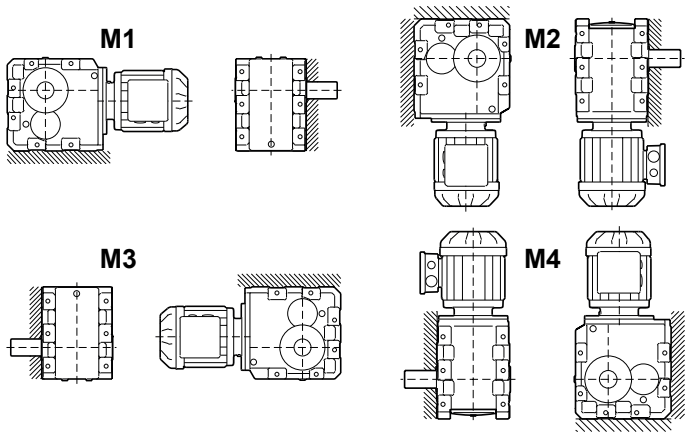	K167 K187	M1 M2 M3 M4	No reduction when the unit is mounted using the gray-shaded feet. In case of deviating mounting, a maximum of 50% of the overhung load F_{Ra} specified in the selection tables is permitted.
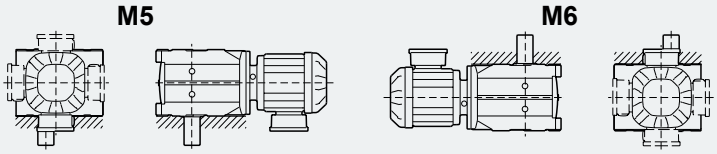	K167 K187	M5 M6	No reduction when the unit is mounted using the gray-shaded feet. In case of deviating mounting, contact SEW-EURODRIVE.
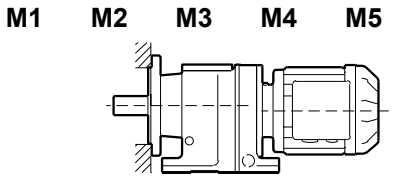	R07F – R87F	M1 – M6	For all foot-mounted/flange-mounted gear units (R..F..) with torque transmission via the flange connection, a maximum of 50% of the overhung load F_{Ra} specified in the selection tables is permitted.

5.5.3 Higher permitted overhung loads

Accurate consideration of the force application angle γ and the direction of rotation can allow for higher overhung load than specified in the selection tables.

In addition, the installation of reinforced bearings can be permitted for higher loads on the output shaft, especially with R.., F.., and K.. gear units.

Contact **SEW-EURODRIVE** in this case.

5.5.4 Definition of the force application

The force application is defined according to the following figure:

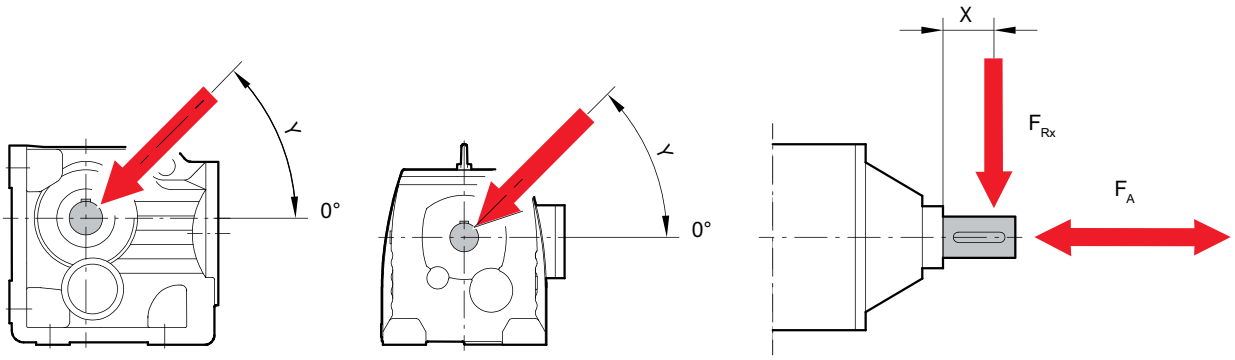

γ	Force application angle	[γ] = °
F_{Rx}	Permitted overhung load at distance x	[F_{Rx}] = N
F_A	Permitted axial load	[F_A] = N

5.5.5 Permitted axial forces

If there is no overhung load, then an axial load F_A (tension or compression) amounting to 50% of the overhung load given in the selection tables is permitted. This condition applies to the following gearmotors:

- Helical gearmotors except for R..127.. to R..167..
- Parallel-shaft helical and helical-bevel gearmotors with solid shaft except for F97..
- Helical-worm gearmotors with solid shaft

Contact **SEW-EURODRIVE** for all other gear unit designs and in the event of significantly greater axial loads or combinations of overhung load and axial load.

5.5.6 Input side: Overhung load conversion for off-center force application

For project planning for gear units with input shaft assembly and off-center force application, contact **SEW-EURODRIVE**.

5.5.7 Output side: Overhung load conversion for off-center force application

In case of force application outside the center of the shaft end, the permitted overhung loads must be calculated according to the selection tables using the following formulas. The smaller of the two values F_{Rb} (according to bearing service life) and F_{Rw} (according to shaft strength) is the permitted value for the overhung load at distance x. Note that the calculations apply to M_{amax}. The permitted overhung load values F_{Ramax} specified in the data tables apply to force application at 0.5 × l (solid shaft).

The following conditions must be met:

F_{Rb} according to bearing service life:

$$F_{Rb} = F_{R_a_max} \cdot \frac{a}{b + x}$$

F_{Rw} according to shaft strength:

$$F_{Rw} = \frac{c}{f + x}$$

F_{Rx}	N	Overhung load at the point of force application
$F_{R_a_max}$	N	Maximum permitted overhung load at the output shaft for continuous duty from selection table
x	mm	Distance between overhung load application and shaft collar at solid shaft/end of hollow shaft
a, b, f	mm	Gear unit constants for overhung load conversion
c	Nmm	Gear unit constants for overhung load conversion

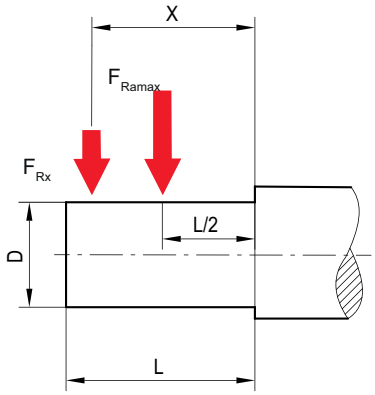

Gear unit constants for overhung load conversion

Gear unit type	a mm	b mm	c Nmm	f mm	d mm	l mm
RX57	43.5	23.5	1.51×10^5	34.2	20	40
RX67	52.5	27.5	2.42×10^5	39.7	25	50
RX77	60.5	30.5	1.95×10^5	0	30	60
RX87	73.5	33.5	7.69×10^5	48.9	40	80
RX97	86.5	36.5	1.43×10^6	53.9	50	100
RX107	102.5	42.5	2.47×10^6	62.3	60	120

Gear unit type	a	b	c	f	d	l
	mm	mm	Nmm	mm	mm	mm
R07	72.0	52.0	4.67×10^4	11	20	40
R17	88.5	68.5	6.53×10^4	17	20	40
R27	106.5	81.5	1.56×10^5	11.8	25	50
R37	118	93	1.24×10^5	0	25	50
R47	137	107	2.44×10^5	15	30	60
R57	147.5	112.5	3.77×10^5	18	35	70
R67	168.5	133.5	2.65×10^5	0	35	70
R77	173.7	133.7	3.97×10^5	0	40	80
R87	216.7	166.7	8.47×10^5	0	50	100
R97	255.5	195.5	1.06×10^6	0	60	120
R107	285.5	215.5	2.06×10^6	0	70	140
R127	311	226	4.93×10^6	0	90	170
R137	343.5	258.5	4.58×10^6	0	90	170
R147	402	297	8.65×10^6	33	110	210
R167	450	345	1.26×10^7	0	120	210
F27	109.5	84.5	1.13×10^5	0	25	50
F37	123.5	98.5	1.07×10^5	0	25	50
F47	153.5	123.5	1.40×10^5	0	30	60
F57	170.7	135.7	2.70×10^5	0	35	70
F67	181.3	141.3	4.12×10^5	0	40	80
F77	215.8	165.8	7.87×10^5	0	50	100
F87	263	203	1.06×10^6	0	60	120
F97	350	280	2.09×10^6	0	70	140
F107	373.5	288.5	4.23×10^6	0	90	170
F127	442.5	337.5	9.45×10^6	0	110	210
F157	512	407	1.05×10^7	0	120	210
K19	103.7	83.7	8.66×10^4	0	20	40
K29	124.5	99.5	1.26×10^5	0	25	50
K37	123.5	98.5	1.30×10^5	0	25	50
K39	155.5	125.5	2.25×10^5	0	30	60
K47	153.5	123.5	1.40×10^5	0	35	70
K49	183.5	148.5	2.63×10^5	0	35	70
K57	169.7	134.7	2.70×10^5	0	35	70
K67	181.3	141.3	4.12×10^5	0	40	80
K77	215.8	165.8	7.69×10^5	0	50	100
K87	252	192	1.64×10^6	0	60	120
K97	319	249	2.80×10^6	0	70	140

Gear unit type	a mm	b mm	c Nmm	f mm	d mm	l mm
K107	373.5	288.5	5.53×10^6	0	90	170
K127	443.5	338.5	8.31×10^6	0	110	210
K157	509	404	1.18×10^7	0	120	210
K167	621.5	496.5	1.88×10^7	0	160	250
S37	118.5	98.5	6.0×10^4	0	20	40
S47	130	105	1.33×10^5	0	25	50
S57	150	120	2.14×10^5	0	30	60
S67	184	149	3.04×10^5	0	35	70
S77	224	179	5.26×10^5	0	45	90
S87	281.5	221.5	1.68×10^6	0	60	120
S97	326.3	256.3	2.54×10^6	0	70	140
W10	84.8	64.8	3.6×10^4	0	16	40
W20	98.5	78.5	4.4×10^4	0	20	40
W30	109.5	89.5	6.0×10^4	0	20	40

The values for the designs not listed here are available on request.

5.6 Dimensional deviations F..87../F..97..

5.6.1 Gear unit dimensions with reinforced bearings

With the exception of the FA./FH.87 and FA./FH.97 gear units, the dimensions of the gear units with advanced bearing arrangement are identical to those of the gear units with standard bearings.

The following dimension drawings show the differing dimensions of FA./FH.87 and FA./FH.97 gear units with advanced bearing arrangement:

FH..
FH..B

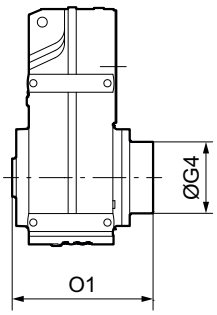

FHF..

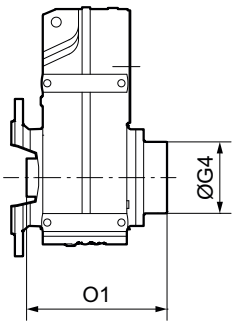

FHZ..

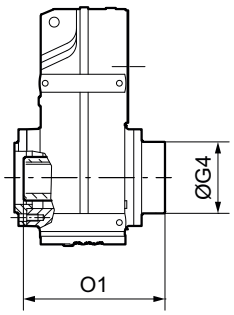

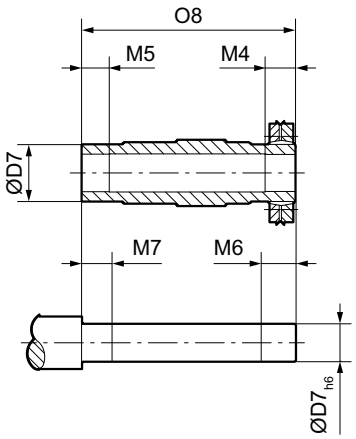

Type	Dimensions in mm								
	D6	D7	G4	M4	M5	M6	M7	O1	O8
FH.87	Ø 65 $_{h6}$	Ø 85	Ø 163	41	40	46	45	312.5	299.5
FH.97	Ø 75 $_{h6}$	Ø 95	Ø 184	55	50	60	55	382.5	367

FA..
FA..B

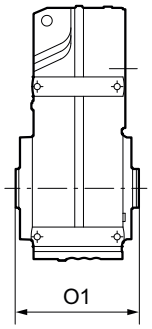

FAF..

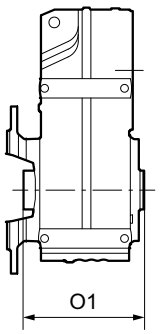

FAZ..

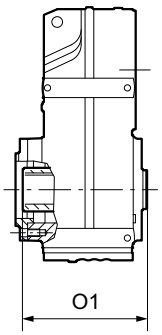

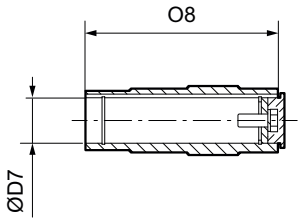

Type	Dimensions in mm		
	D7	O1	O8
FA.87	Ø 60 H7	256.5	244
FA.97	Ø 70 H7	318	303.5

5.7 Gear unit dimensions in reduced-backlash designs

The reduced backlash design is possible for the following gear units:

- Helical gear units (R) of gear unit sizes 37 to 167
- Parallel-shaft helical gear units (F) of gear unit sizes 37 to 157
- Helical-bevel gear units (only K..7) of gear unit sizes 37 to 187

With the exception of reduced backlash parallel-shaft helical gear units FH.87 and FH.97, the dimensions of low-backlash gear units are identical with the dimensions of the standard designs.

The following figure shows the deviating dimensions of the reduced backlash gear units FH.87 and FH.97:

42 020 00 09

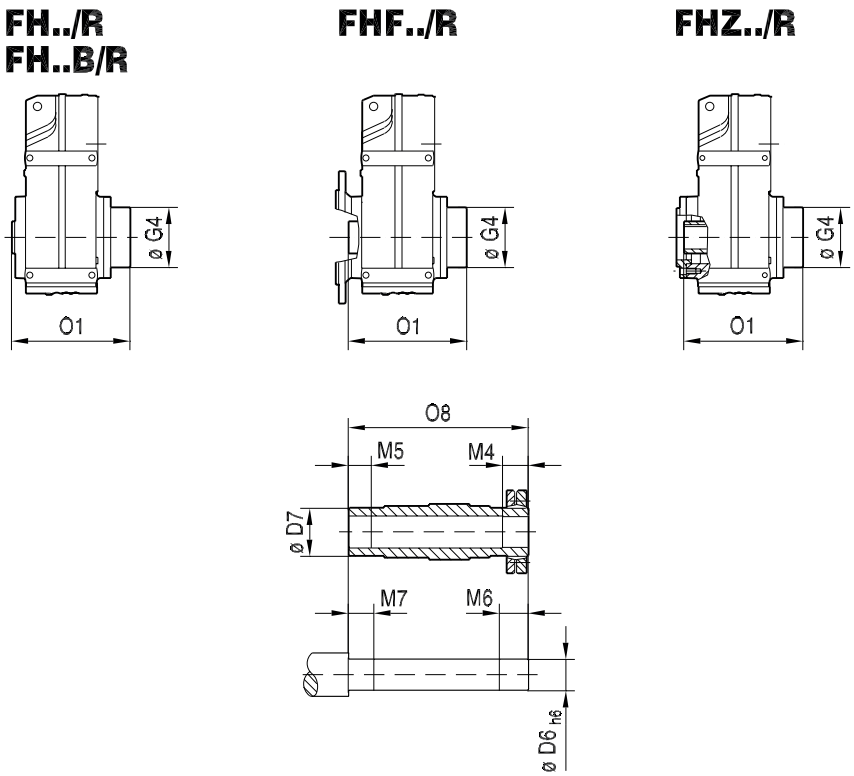

Type	Dimensions in mm								
	D6	D7	G4	M4	M5	M6	M7	O1	O8
FH.87/R	Ø 65 $_{h6}$	Ø 85	Ø 163	41	40	46	45	312.5	299.5
FH.97/R	Ø 75 $_{h6}$	Ø 95	Ø 184	55	50	60	55	382.5	367

6 Appendix

6.1 Technical data of the motors

Refer to the "AC Motors" catalog for more information.

6.1.1 Key to the data tables

The following table lists the short symbols used in the "Technical data" tables.

P_N	Rated power
M_N	Rated torque
n_N	Rated speed
I_N	Rated current
cosφ	Power factor
$\eta_{50\%}$	Efficiency at 50 % of the rated power
$\eta_{75\%}$	Efficiency at 75 % of the rated power
$\eta_{100\%}$	Efficiency at 100 % of the rated power
I_A/I_N	Starting current ratio
M_A/M_N	Starting torque ratio
M_H/M_N	Acceleration torque ratio
M_K/M_N	Breakdown torque ratio
m_{Mot}	Mass of the motor
J_{Mot}	Mass moment of inertia of the motor
BE..	Brake used
Z_0 BG	Switching frequency for operation with BG brake control
Z_0 BGE	Switching frequency for operation with BGE brake control
M_B	Braking torque
m_{BMot}	Mass of the brakemotor
J_{BMot}	Mass moment of inertia of the brakemotor

6.1.2 IE3 DRN.. motors, 400 V, 50 Hz, 2-pole, duty type S1

Information on motors

Motor	P_N kW	M_N Nm	n_N min^{-1}	I_N 400 V A	cosφ	$\eta_{50\%}$ %	$\eta_{75\%}$ %	$\eta_{100\%}$ %	I_A/I_N	M_A/M_N M_H/M_N	M_K/M_N
DRN 63MS 2	0.18	0.63	2725	0.465	0.78	62.7	66.2	65.9	4.2	2.6 2.6	2.6
DRN 63M 2	0.25	0.87	2755	0.57	0.81	69.2	70.9	69.7	4.9	2.7 2.6	2.7
DRN 71MS 2	0.25	0.84	2834	0.59	0.77	66.1	69.2	69.7	5.7	3.5 3.0	3.5
DRN 71MS 2	0.37	1.26	2810	0.87	0.78	70.7	73.8	73.8	5.4	3.1 2.7	3.1
DRN 71M 2	0.55	1.86	2825	1.24	0.81	75.7	78.0	77.8	5.9	3.2 3.0	3.2
DRN 80MS 2	0.75	2.5	2855	1.58	0.84	80.2	82.0	81.4	5.9	2.8 2.5	2.9
DRN 80M 2	1.1	3.65	2860	2.2	0.85	83.1	84.0	83.0	6.6	3.0 2.5	2.9
DRN 90S 2	1.5	4.95	2908	3.1	0.83	83.7	85.0	84.2	7.1	2.7 2.0	2.9
DRN 90L 2	2.2	7.2	2905	4.3	0.80	86.1	86.7	85.9	7.4	2.7 2.1	3.0
DRN 100LM 2	3	9.9	2894	5.8	0.85	88.9	88.7	87.2	7.7	3.3 2.6	3.5
DRN 112M 2	4	13	2948	7.5	0.86	88.1	88.7	88.1	9.8	3.3 2.7	3.9
DRN 132S 2	5.5	17.9	2935	9.4	0.92	90.3	90.2	89.2	10.0	3.0 2.1	3.7
DRN 132S 2	7.5	24.5	2936	14.1	0.85	90.6	90.8	90.1	9.6	3.3 2.4	3.4

Further information on motors and brakemotors

Motor	P_N	M_N	n_N	m_{Mot}	J_{Mot}	BE..	Z_0 BG BGE	M_B	m_{BMot}	J_{BMot}
	kW	Nm	min^{-1}	kg	10^{-4} kgm²		h^{-1}	Nm	kg	10^{-4} kgm²
DRN 63MS 2	0.18	0.63	2725	4.9	2.95	BE03	5000 6000	1.3	6.8	3.64
DRN 63M 2	0.25	0.87	2755	5.8	3.76	BE03	4500 6000	1.7	7.7	4.45
DRN 71MS 2	0.25	0.84	2834	6.8	2.93	BE03	3600 6000	1.7	8.7	3.62
DRN 71MS 2	0.37	1.26	2810	6.8	2.93	BE03	3600 6000	2.7	8.7	3.62
DRN 71M 2	0.55	1.86	2825	8	3.71	BE05	2600 5500	5	10	5.01
DRN 80MS 2	0.75	2.5	2855	11	18.5	BE05	1200 3400	5	15	20
DRN 80M 2	1.1	3.65	2860	14	24.1	BE1	1000 2600	7	18	25.6
DRN 90S 2	1.5	4.95	2908	20	53.1	BE1	600 1300	10	22	54.7
DRN 90L 2	2.2	7.2	2905	23	66.3	BE2	– 1000	14	27	71
DRN 100LM 2	3	9.9	2894	33	89.7	BE2	– 750	20	37	94.4
DRN 112M 2	4	13	2948	45	178	BE5	– 400	28	52	183
DRN 132S 2	5.5	17.9	2935	56	241	BE5	– 300	40	64	246
DRN 132S 2	7.5	24.5	2936	56	241	BE5	– 300	55	64	246

6.1.3 IE3 DRN.. motors, 400 V, 50 Hz, 4-pole, duty type S1

Information on motors

Motor	P_N kW	M_N Nm	n_N min^{-1}	I_N A	cosφ	$\eta_{50\%}$ %	$\eta_{75\%}$ %	$\eta_{100\%}$ %	I_A/I_N	M_A/M_N M_H/M_N	M_K/M_N
DRN 63MS 4	0.12	0.83	1380	0.405	0.64	58.2	63.9	64.8	3.6	2.7 2.6	2.7
DRN 63M 4	0.18	1.25	1375	0.57	0.65	65.1	69.4	69.9	3.7	2.6 2.6	2.6
DRN 71MS 4	0.18	1.19	1440	0.64	0.54	61.1	67.1	69.9	4.9	3.6 3.2	3.6
DRN 71MS 4	0.25	1.7	1405	0.72	0.66	70.1	73.5	73.5	4.3	2.5 2.3	2.5
DRN 71M 4	0.37	2.5	1415	1.02	0.66	74.3	77.3	77.3	4.8	2.8 2.4	2.8
DRN 80MK 4	0.55	3.65	1435	1.29	0.75	78.6	81.0	80.8	6.1	2.7 2.1	3.1
DRN 80M 4	0.75	4.95	1440	1.75	0.74	80.7	82.9	82.9	6.7	3.1 2.7	3.4
DRN 90S 4	1.1	7.2	1455	2.55	0.73	83.5	85.0	84.5	6.9	2.7 2.1	3.3
DRN 90L 4	1.5	9.8	1461	3.4	0.74	84.6	86.1	85.6	7.5	2.7 2.0	3.3
DRN 100LS 4	2.2	14.5	1450	4.75	0.76	86.4	87.5	86.9	7.1	2.9 2.2	3.3
DRN 100L 4	3	19.7	1456	6.4	0.76	87.3	88.3	87.8	8.2	3.4 2.7	3.7
DRN 112M 4	4	26	1464	7.9	0.81	88.6	89.4	88.7	8.2	2.6 2.3	3.4
DRN 132S 4	5.5	36	1461	10.5	0.84	90.6	90.6	89.6	8.3	2.8 2.2	3.5
DRN 132M 4	7.5	49	1468	15.2	0.78	90.8	91.1	90.4	7.8	3.1 2.4	3.3
DRN 132L 4	9.2	60	1470	18.7	0.77	90.8	91.6	91.0	8.4	3.7 1.8	3.7
DRN 160M 4	11	71	1473	21	0.81	91.0	91.7	91.4	7.3	2.6 2.2	3.0
DRN 160L 4	15	97	1474	29	0.80	91.9	92.5	92.1	8.0	3.0 2.0	3.4
DRN 180M 4	18.5	120	1478	33.5	0.85	92.8	93.1	92.6	9.4	3.6	3.6

Motor	P_N kW	M_N Nm	n_N min^{-1}	I_N A	cosφ	$\eta_{50\%}$ %	$\eta_{75\%}$ %	$\eta_{100\%}$ %	I_A/I_N	M_A/M_N M_H/M_N	M_K/M_N
										2.9	
DRN 180L 4	22	142	1477	38.5	0.87	93.4	93.6	93.0	9.6	3.5 2.1	3.4
DRN 200L 4	30	194	1480	56	0.82	93.3	93.9	93.6	8.2	2.9 2.5	3.3
DRN 225S 4	37	240	1482	64	0.88	94.3	94.4	93.9	8.4	3.0 2.3	2.7
DRN 225M 4	45	290	1482	81	0.85	94.1	94.5	94.2	8.8	3.0 2.2	2.7
DRN 250M 4	55	355	1482	104	0.80	94.4	94.8	94.6	8.2	4.0 2.5	2.9
DRN 280S 4	75	485	1482	143	0.79	94.9	95.3	95.0	7.6	3.7 2.6	2.9
DRN 280M 4	90	580	1481	161	0.84	95.4	95.6	95.2	7.7	3.6 2.0	2.7
DRN 315S 4	110	710	1488	189	0.87	95.4	95.7	95.5	6.7	2.9 2.1	3.1
DRN 315M 4	132	850	1487	230	0.87	95.6	95.9	95.6	6.5	2.7 2.0	2.9
DRN 315L 4	160	1030	1486	275	0.87	95.9	96.1	95.9	6.5	2.7 2.0	2.8
DRN 315H 4	200	1.280	1489	355	0.84	95.4	96.0	96.0	8.1	3.7 2.8	3.8

Further information on motors and brakemotors

Motor	P_N kW	M_N Nm	n_N min^{-1}	m_{Mot} kg	J_{mot} 10^{-4} kgm^2	BE..	Z_0 BG BGE h^{-1}	M_B Nm	m_{BMot} kg	J_{BMot} 10^{-4} kgm^2
DRN 63MS 4	0.12	0.83	1380	4.9	2.95	BE03	10 000 10 000	1.7	6.8	3.64
DRN 63M 4	0.18	1.25	1375	5.8	3.76	BE03	10 000 10 000	2.7	7.7	4.45
DRN 71MS 4	0.18	1.19	1440	6.8	5.42	BE03	6200 9700	2.7	8.7	6.11
DRN 71MS 4	0.25	1.7	1405	6.8	5.42	BE03	6200 9700	3.4	8.7	6.11
DRN 71M 4	0.37	2.5	1415	8	7.14	BE05	5000 9000	5	10	8.44
DRN 80MK 4	0.55	3.65	1435	11	16.8	BE1	3500 8500	7	14	18.3
DRN 80M 4	0.75	4.95	1440	14	24.5	BE1	3200 8200	10	18	26
DRN 90S 4	1.1	7.2	1455	20	54	BE2	2300 6000	14	24	58.7
DRN 90L 4	1.5	9.8	1461	23	67.2	BE2	2200 5800	20	27	71.9
DRN 100LS 4	2.2	14.5	1450	27	81.4	BE5	- 6100	28	33	87.4
DRN 100L 4	3	19.7	1456	34	112	BE5	- 3700	40	40	118
DRN 112M 4	4	26	1464	45	178	BE5	- 2900	55	52	183
DRN 132S 4	5.5	36	1461	56	241	BE11	- 2100	80	71	251
DRN 132M 4	7.5	49	1468	74	381	BE11	- 1100	110	92	403
DRN 132L 4	9.2	60	1470	82	439	BE20	- 980	150	110	490
DRN 160M 4	11	71	1473	115	817	BE20	- 900	150	150	877
DRN 160L 4	15	97	1474	130	1040	BE20	- 800	200	165	1100
DRN 180M 4	18.5	120	1478	155	1630	BE30	- 510	300	195	1770

Motor	P_N kW	M_N Nm	n_N min^{-1}	m_{Mot} kg	J_{mot} 10^{-4} kgm^2	BE..	Z_0 BG BGE h^{-1}	M_B Nm	m_{BMot} kg	J_{BMot} 10^{-4} kgm^2
DRN 180L 4	22	142	1477	170	1950	BE30	- 470	300	210	2090
DRN 200L 4	30	194	1480	285	2660	BE32	- 500	400	340	2890
DRN 225S 4	37	240	1482	315	4350	BE32	- 230	500	370	4580
DRN 225M 4	45	290	1482	315	4350	BE32	- 200	600	370	4580
DRN 250M 4	55	355	1482	470	7360	BE62	- 180	800	560	7960
DRN 280S 4	75	485	1482	530	8940	BE62	- 150	1000	620	9530
DRN 280M 4	90	580	1481	640	12000	BE62	- 79	1200	730	12600
DRN 315S 4	110	710	1488	880	23400	BE122	- 53	1600	1020	24400
DRN 315M 4	132	850	1487	900	24800	BE122	- 46	2000	1040	25800
DRN 315L 4	160	1030	1486	1030	28600	BE122	- 34	2000	1160	29600
DRN 315H 4	200	1.280	1489	1150	35200	BE122	- 23	2000	1.280	36200

6.1.4 IE3 DRN.. motors, 400 V, 50 Hz, 6-pole, duty type S1

Information on motors

Motor	P_N kW	M_N Nm	n_N min^{-1}	I_N 400 V A	cosφ	$\eta_{50\%}$ %	$\eta_{75\%}$ %	$\eta_{100\%}$ %	I_A/I_N	M_A/M_N M_H/M_N	M_K/M_N
DRN 63MR 6	0.09	0.93	920	0.36	0.58	44.3	51.6	55.0	2.9	2.7 2.6	2.8
DRN 63M 6	0.12	1.32	870	0.405	0.71	51.9	57.4	57.7	2.6	1.9 1.8	1.9
DRN 71MS 6	0.18	1.88	915	0.55	0.69	59.4	63.7	63.9	3.4	1.9 1.9	2.2
DRN 71M 6	0.25	2.6	915	0.76	0.68	63.5	68.2	68.6	3.4	2.0 1.9	2.3
DRN 80MK 6	0.37	3.8	935	1.05	0.68	70.8	73.8	73.5	4.1	2.1 2.1	2.4
DRN 90SR 6	0.55	5.4	966	1.52	0.65	73.5	76.7	77.2	5.2	2.3 2.2	2.8
DRN 90S 6	0.75	7.5	957	2	0.68	77.4	79.8	78.9	4.8	2.0 2.0	2.4
DRN 90L 6	1.1	11	957	2.95	0.67	78.8	81.2	81.0	5.0	2.4 2.3	2.8
DRN 100L 6	1.5	14.9	961	4.1	0.63	80.7	82.8	82.5	4.7	2.2 2.2	2.9
DRN 112M 6	2.2	21.5	973	5.5	0.66	83.6	85.0	84.3	6.5	2.4 1.9	3.2
DRN 132S 6	3	29.5	974	7.4	0.66	84.8	86.0	85.6	6.2	2.6 2.5	3.4
DRN 132S 6	4	39.5	968	9.7	0.68	86.4	87.5	86.8	5.5	2.5 2.5	3.2
DRN 132L 6	5.5	54	975	13.8	0.64	86.9	88.3	88.0	5.6	2.7 2.5	2.8
DRN 160M 6	7.5	73	979	15.8	0.74	88.4	89.4	89.1	8.2	2.7 1.6	4.0

Further information on motors and brakemotors

Motor	P_N kW	M_N Nm	n_N min^{-1}	m_{Mot} kg	J_{Mot} 10^{-4} kgm^2	BE..	Z_0 BG BGE h^{-1}	M_B Nm	m_{BMot} kg	J_{BMot} 10^{-4} kgm^2
DRN 63MR 6	0.09	0.93	920	5.8	6.47	BE03	12000 12000	2.1	7.7	7.16
DRN 63M 6	0.12	1.32	870	5.8	6.47	BE03	12000 12000	2.7	7.7	7.16
DRN 71MS 6	0.18	1.88	915	6.8	8.29	BE05	7000 12000	5	9.2	9.59
DRN 71M 6	0.25	2.6	915	8	10.4	BE05	5200 12000	5	10	11.7
DRN 80MK 6	0.37	3.8	935	11	16.8	BE1	3000 9000	10	14	18.3
DRN 90SR 6	0.55	5.4	966	20	54	BE2	2400 5000	14	24	58.7
DRN 90S 6	0.75	7.5	957	20	54	BE2	2400 5000	20	24	58.7
DRN 90L 6	1.1	11	957	23	67.4	BE5	2200 4400	28	29	73.4
DRN 100L 6	1.5	14.9	961	34	112	BE5	– 3400	40	40	118
DRN 112M 6	2.2	21.5	973	45	178	BE5	– 2500	55	52	183
DRN 132S 6	3	29.5	974	56	245	BE11	– 2300	80	71	256
DRN 132S 6	4	39.5	968	56	245	BE11	– 2100	80	71	256
DRN 132L 6	5.5	54	975	82	439	BE11	– 1700	110	100	461
DRN 160M 6	7.5	73	979	115	1290	BE20	– 1200	150	150	1350

6.1.5 IE3 DRN.. motors, 400 V, 50 Hz, 8-pole, duty type S1

Information on motors

Motor	P_N kW	M_N Nm	n_N min^{-1}	I_N A	cosφ	$\eta_{50\%}$ %	$\eta_{75\%}$ %	$\eta_{100\%}$ %	I_A/I_N	M_A/M_N M_H/M_N	M_K/M_N
DRN 71MSR 8	0.09	1.24	695	0.435	0.53	39.0	46.7	50.7	2.4	2.3 2.3	2.6
DRN 71MS 8	0.12	1.72	665	0.47	0.64	46.2	52.4	53.5	2.3	1.6 1.6	1.8
DRN 80MK 8	0.18	2.45	705	0.76	0.54	49.4	56.1	58.7	3.0	1.8 1.8	2.4
DRN 80M 8	0.25	3.4	702	1.02	0.53	55.8	62.0	64.1	3.0	2.0 1.9	2.3
DRN 90S 8	0.37	4.95	716	1.38	0.55	61.9	67.5	69.3	3.6	1.8 1.7	2.4
DRN 90L 8	0.55	7.4	710	1.81	0.59	69.0	72.7	73.0	3.5	1.8 1.8	2.3
DRN 100LS 8	0.75	10.1	708	2.25	0.62	72.2	75.2	75.0	3.8	1.9 1.8	2.2
DRN 100L 8	1.1	14.8	710	3.45	0.59	73.5	77.2	77.7	4.1	2.2 2.1	2.7
DRN 112M 8	1.5	20	715	4.2	0.63	78.7	80.4	79.7	4.3	1.9 1.8	2.3
DRN 132S 8	2.2	29.5	715	6	0.64	81.6	82.9	81.9	4.5	2.0 1.8	2.4
DRN 132M 8	3	39.5	726	8.7	0.58	80.9	83.3	83.5	5.1	2.2 2.0	2.9
DRN 132L 8	4	53	722	11.1	0.61	83.6	85.1	84.8	4.7	2.1 1.9	2.6
DRN 160M 8	5.5	72	729	15	0.61	85.1	86.5	86.2	5.4	2.1 1.9	2.8
DRN 160L 8	7.5	98	729	19.6	0.63	86.8	87.7	87.3	5.8	2.1 1.9	2.9
DRN 180L 8	11	143	733	27.5	0.64	88.2	89.0	88.6	5.2	2.6 2.0	2.2

Further information on motors and brakemotors

Motor	P_N kW	M_N Nm	n_N min^{-1}	m_{Mot} kg	J_{mot} 10^{-4} kgm^2	BE..	Z_0 BG BGE h^{-1}	M_B Nm	m_{BMot} kg	J_{BMot} 10^{-4} kgm^2
DRN 71MSR 8	0.09	1.24	695	6.8	8.29	BE03	6000 16000	2.7	8.7	8.98
DRN 71MS 8	0.12	1.72	665	6.8	8.29	BE03	6000 16000	3.4	8.7	8.98
DRN 80MK 8	0.18	2.45	705	11	16.8	BE05	5000 11500	5	14	18.3
DRN 80M 8	0.25	3.4	702	14	24.5	BE1	3700 10 500	7	18	26
DRN 90S 8	0.37	4.95	716	20	54	BE1	2800 6700	10	23	55.6
DRN 90L 8	0.55	7.4	710	23	67.6	BE2	2300 5700	20	27	72.3
DRN 100LS 8	0.75	10.1	708	27	80.8	BE2	2400 6400	20	32	85.5
DRN 100L 8	1.1	14.8	710	34	111	BE5	1800 5300	40	40	117
DRN 112M 8	1.5	20	715	45	182	BE5	- 3500	55	52	187
DRN 132S 8	2.2	29.5	715	56	245	BE11	- 2500	80	71	255
DRN 132M 8	3	39.5	726	74	564	BE11	- 2300	80	92	586
DRN 132L 8	4	53	722	82	678	BE11	- 2100	110	100	700
DRN 160M 8	5.5	72	729	115	1290	BE20	- 1300	150	150	1.350
DRN 160L 8	7.5	98	729	130	1640	BE20	- 1100	200	165	1700
DRN 180L 8	11	143	733	175	1960	BE30	- 1000	300	215	2100

6.2 Abbreviations and descriptions

Formula symbol	Unit	Description
–	–	The red characteristic curve for continuous duty is used for project planning. The configuration rule prescribes that the operating point of a cycle (M_{a_kub}) must be lower than the characteristic curve for continuous duty.
–	–	The blue characteristic curve for short-time duty is used for project planning. The project planning rule prescribes that the black characteristic curve of the cycle or the maximum application torque M_{max} must be lower than the characteristic curve for short-time duty.
c_{pr}	Nm/arcmin	Tilting rigidity: Ratio of the applied breakdown torque to the resulting tilting angle at the output
c_{tr}	Nm/arcmin	Torsional rigidity: Ratio of the applied output torque to the resulting torsional angle at the output when the input side is blocked.
cdf	%	Maximum permitted cyclic duration factor that refers to the time proportion at speed ≠ 0 per cycle.
$F_{A_a_N}$	N	Nominal axial load at the gear unit output shaft, during continuous duty, with central force application, nominal speed n_{e_N}, nominal torque M_{a_N}, gear unit service life L, and without any radial load.
$F_{A_a_pk}$	N	Maximum permitted axial load at the output shaft of the gear unit during short-time duty, with centered force application, and without any present radial load.
f_{dyn}	–	Dynamic factor: Dynamic component during drive selection that describes a torque spike during the acceleration process.
$F_{R_a_max}$	N	Maximum permitted radial load at the gear unit output shaft during continuous duty. The center of the shaft end is the load application point.
$F_{R_a_N}$	N	Nominal radial load that occurs at the gear unit's output shaft during continuous duty, at the force application point x = L/2 of the output-side solid shaft or x = 0 on the face end of the flange block shaft, in flange block gear units, nominal speed n_{e_N}, nominal torque M_{a_N}, gear unit service life L, without acting axial load.
$F_{R_a_pk}$	N	Maximum permitted radial load that may occur at the gear unit's output shaft during short-time duty, at the force application point x = L/2 for solid shafts or x = 0 on the face end of the flange block shaft, in flange block gear units without acting axial load. Note: The value is defined without any active torque and without reference to speed. The force is applied from one direction and is not circumferential.
F_{R_kub}	N	Cubic radial load at cubic torque M_{a_kub}
F_{R_max}	N	Maximum radial load at the gear unit output shaft, calculated based on the project planning of the customer application.
f_Z	–	Transmission element factor when determining the radial load includes the influence of the transmission element on the output shaft of the gear unit.
I_0	A	Standstill current
I_{max}	A	Maximum current
J	10^{-4} kgm^2	Mass moment of inertia
J_{BMot}	kgm^2	Mass moment of inertia of the brakemotor
J_{ext}	kgm^2	External mass moment of inertia (in relation to the motor shaft)
J_{Mot}	kgm^2	Mass moment of inertia of the motor
k	–	Inertia ratio J_{ext} / J_{Mot}
L	h	Service life at maximum permitted cyclic duration factor and maximum permitted cycle time, nominal output torque M_{a_N}, nominal input speed n_{e_N} and nominal overhung load $F_{R_a_N}$.
L_1	mH	Inductance between connection phase and neutral conductor
M_0	Nm	Standstill torque

Formula symbol	Unit	Description
$M_{4,100°C}$	Nm	Statistically smallest occurring value of the static braking torque in holding brake operation (at a friction surface temperature of +100 °C)
M_{a_dyn}	Nm	Maximum possible dynamic torque at the gear unit output taking into account the peak motor torque, the gear ratio and the gear unit efficiency
M_{a_es}	Nm	Maximum permitted torque at the output shaft of the gear unit during emergency stop. Maximally 1000 static events are permitted during the gear unit service life L.
M_{a_kub}	Nm	Effective cubic torque calculated from the configuration (operating point).
M_{a_N}	Nm	Nominal torque that occurs at the gear unit output shaft during continuous duty, at nominal speed n_{e_N}, nominal ambient temperature T_{amb_N}, maximum permitted housing temperature T_{max}, and gear unit service life L. Information: The nominal radial load or nominal axial load can apply additionally. When radial and axial forces are acting simultaneously, the catalog data becomes invalid and the combined forces must be recalculated accordingly.
M_{a_pk}	Nm	Peak torque at the output shaft
m	kg	Mass
m_{BMot}	kg	Mass of the brakemotor
m_{Mot}	kg	Mass of the motor
M_{e_0}	Nm	Mean torque occurring at the gear unit input shaft, at no-load operation, at nominal speed n_{e_N}, and at nominal ambient temperature T_{amb_N}.
M_{rms}	Nm	Effective torque
M_{e_max}	Nm	Maximum torque at the gear unit input shaft.
$M_{K_a_N}$	Nm	Nominal breakdown torque during continuous duty with point of force application x = L/2 at the output shaft, nominal speed n_{e_N},, nominal torque M_{a_N},, gear unit service life L, without any axial load. The nominal breakdown torque is defined for the nominal radial load at x = L/2, which rotates around the input pressure point.
$M_{K_a_pk}$	Nm	Maximum permitted acceleration tilting torque during short-time duty, with point of force application x = L/2 at the output shaft, without any axial load. The acceleration tilting torque is defined for the lateral force of acceleration at x = L/2, which rotates around the input pressure point.
M_{max}	Nm	Maximum torque at the gear unit output shaft, calculated based on the project planning of the customer application.
M_{pk}	Nm	Dynamic limit torque
n_{a_m}	min^{-1}	Mean speed at the gear unit output shaft, calculated based on the configuration of the customer application.
n_c	min^{-1}	Speed class
n_{eff}	min^{-1}	rms speed
n_{e_N}	min^{-1}	Nominal speed at the gear unit input shaft, during continuous duty, at nominal torque M_{a_N}, nominal ambient temperature T_{amb_N}, maximum permitted housing temperature T_{max} and gear unit service life L.
n_{e_pk}	min^{-1}	Peak rotational speed at the input shaft
n_{max}	min^{-1}	Maximum speed required at the motor output shaft, calculated based on the project planning of the customer application. It is calculated based on the speed required at the gear unit output shaft by the customer application.
$n_{max,1}$	min^{-1}	Maximum permitted speed when the brake is applied in the event of an emergency stop
P_B	W	Braking power
P_{B_pk}	W	Maximum braking power
R_1	Ω	Resistance between connection phase and neutral conductor
T_{amb}	°C	Ambient temperature

Formula symbol	Unit	Description
T_{amb_N}	°C	Ambient temperature used as basis for calculating the permitted nominal values.
T_{max}	°C	Maximum permitted temperature
t_z	min	Maximum permitted duration of a repetitive reference cycle, that corresponds to the sum of all time components of motion and standstill.
V_N	V	Nominal brake voltage
V_{p0_cold}	V	Internal voltage in the motor induced into the stator winding by the exciter during no-load operation.
φ	arcmin	Rotational clearance: Synchronism difference from both directions of rotation
η	%	Efficiency

6.3 Notes

6.3.1 Product names and trademarks

The product names mentioned in this documentation are trademarks or registered trademarks of the respective titleholders.

6.3.2 Copyright notice

© 2026 SEW-EURODRIVE. All rights reserved. Copyright law prohibits the unauthorized reproduction, modification, distribution and use of this document – in whole or in part.

6.3.3 Decimal separator in numerical values

In this document, a period is used to indicate the decimal separator.

Example: 30.5 kg

6.3.4 Recycling, reprocessing, reuse

When manufacturing products, SEW-EURODRIVE makes sure to keep the use of new natural resources to a minimum in the interests of the circular economy. Key aspects here are the recycling of materials as well as the inspection and/or processing of returned components and their reuse in new products. These processes are only used at SEW-EURODRIVE if the resulting materials and components correspond to the quality of new products.

6.3.5 General Terms and Conditions (T&Cs)

You can find an overview of SEW-EURODRIVE's General Terms and Conditions (GTC) under the following links.

- General Terms and Conditions (GTC) in German
- General Terms and Conditions (GTC) in English

For business with customers and suppliers of subsidiaries and representatives of SEW-EURODRIVE outside Germany, the respective local General Terms and Conditions and (shipping) conditions apply.

- SEW-EURODRIVE worldwide in German
- SEW-EURODRIVE worldwide in English

7 Contacting SEW-EURODRIVE

You can find the worldwide contact data and locations on the **SEW-EURODRIVE website** via the following link or the QR code shown below.

https://www.sew-eurodrive.de/contacts-worldwide



Scan it

SEW-EURODRIVE GmbH & Co KG
Ernst-Blickle-Str. 42
76646 Bruchsal/Germany
Tel. +49 725175-0
Fax +49 725175-1970
sew@sew-eurodrive.com
www.sew-eurodrive.com